US007916574B1

(12) **United States Patent**
Solomon et al.

(10) **Patent No.: US 7,916,574 B1**
(45) **Date of Patent: Mar. 29, 2011**

(54) **CIRCUIT PROVIDING LOAD ISOLATION AND MEMORY DOMAIN TRANSLATION FOR MEMORY MODULE**

(75) Inventors: **Jeffrey C. Solomon**, Irvine, CA (US); **Jayesh R. Bhakta**, Cerritos, CA (US)

(73) Assignee: **Netlist, Inc.**, Irvine, CA (US)

(*) Notice: Subject to any disclaimer, the term of this patent is extended or adjusted under 35 U.S.C. 154(b) by 0 days.

(21) Appl. No.: **12/955,711**

(22) Filed: **Nov. 29, 2010**

Related U.S. Application Data

(63) Continuation of application No. 12/629,827, filed on Dec. 2, 2009, now Pat. No. 7,881,150, which is a continuation of application No. 12/408,652, filed on Mar. 20, 2009, now Pat. No. 7,636,274, which is a continuation of application No. 11/335,875, filed on Jan. 19, 2006, now Pat. No. 7,532,537, which is a continuation-in-part of application No. 11/173,175, filed on Jul. 1, 2005, now Pat. No. 7,289,386, which is a continuation-in-part of application No. 11/075,395, filed on Mar. 7, 2005, now Pat. No. 7,286,436.

(60) Provisional application No. 60/645,087, filed on Jan. 19, 2005, provisional application No. 60/588,244, filed on Jul. 15, 2004, provisional application No. 60/550,668, filed on Mar. 5, 2004, provisional application No. 60/575,595, filed on May 28, 2004, provisional application No. 60/590,038, filed on Jul. 21, 2004.

(51) **Int. Cl.**
G11C 8/00 (2006.01)

(52) **U.S. Cl.** **365/230.06**; 365/51; 365/149; 365/230.03; 365/233.13

(58) **Field of Classification Search** 365/51, 365/149, 230.03, 230.06, 233.13
See application file for complete search history.

(56) **References Cited**

U.S. PATENT DOCUMENTS

4,368,515 A 1/1983 Nielsen
4,392,212 A 7/1983 Miyasaka et al.
4,633,429 A 12/1986 Lewandowski et al.
(Continued)

FOREIGN PATENT DOCUMENTS

WO WO 92/02879 2/1992
(Continued)

OTHER PUBLICATIONS

U.S. Appl. No. 12/815,339, filed Jun. 14, 2010; Owned by Netlist, Inc.
(Continued)

Primary Examiner — Alexander Sofocleous
(74) *Attorney, Agent, or Firm* — Knobbe, Martens, Olson & Bear, LLP

(57) **ABSTRACT**

A circuit is configured to be mounted on a memory module connectable to a computer system so as to be electrically coupled to a plurality of memory devices on the memory module. The memory module has a first number of ranks of double-data-rate (DDR) memory devices activated by a first number of chip-select signals. The circuit is configurable to receive bank address signals, a second number of chip-select signals, and row/column address signals from the computer system. The circuit is further configurable to generate phase-locked clock signals in response to clock signals received from the computer system, to selectively isolate one or more loads of the first number of ranks from the computer system, and to translate between a system memory domain and a physical memory domain of the memory module.

40 Claims, 23 Drawing Sheets

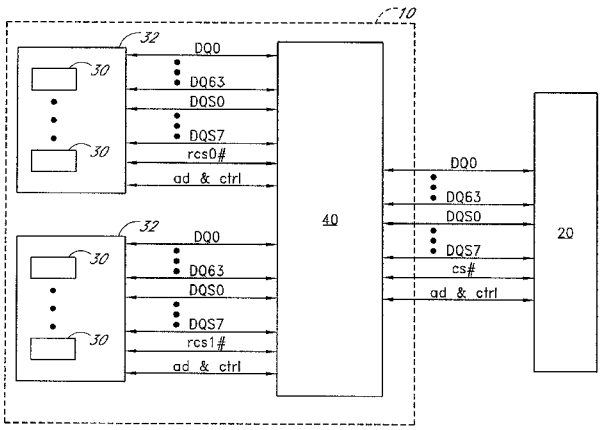

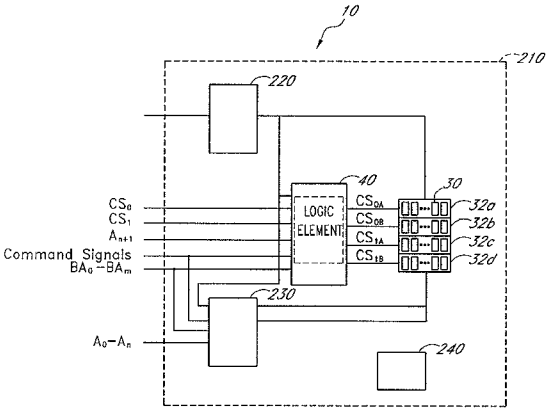

U.S. PATENT DOCUMENTS

4,670,748 A 6/1987 Williams
4,866,603 A 9/1989 Chiba
4,958,322 A 9/1990 Kosugi et al.
4,961,172 A 10/1990 Shubat et al.
4,980,850 A 12/1990 Morgan
5,247,643 A 9/1993 Shottan
5,345,412 A 9/1994 Shiratsuchi
5,426,753 A 6/1995 Moon
5,483,497 A 1/1996 Mochizuki et al.
5,495,435 A 2/1996 Sugahara
5,581,498 A 12/1996 Ludwig et al.
5,590,071 A 12/1996 Kolor et al.
5,699,542 A 12/1997 Mehta et al.
5,702,984 A 12/1997 Bertin et al.
5,703,826 A 12/1997 Hush et al.
5,745,914 A 4/1998 Connolly et al.
5,802,395 A 9/1998 Connolly et al.
5,805,520 A 9/1998 Anglada et al.
5,822,251 A 10/1998 Bruce et al.
RE36,229 E 6/1999 Cady
5,926,827 A 7/1999 Dell et al.
5,959,930 A 9/1999 Sakurai
5,963,464 A 10/1999 Dell et al.
5,966,736 A 10/1999 Gittinger et al.
6,018,787 A 1/2000 Ip
6,044,032 A 3/2000 Li
6,070,217 A 5/2000 Connolly et al.
6,070,227 A 5/2000 Rokicki
6,097,652 A 8/2000 Roh
6,108,745 A 8/2000 Gupta et al.
6,134,638 A 10/2000 Olarig et al.
6,151,271 A 11/2000 Lee
6,154,418 A 11/2000 Li
6,154,419 A 11/2000 Shakkarwar
6,185,654 B1 2/2001 Van Doren
6,209,074 B1 3/2001 Dell et al.
6,226,709 B1 5/2001 Goodwin et al.
6,226,736 B1 5/2001 Niot
6,233,650 B1 5/2001 Johnson et al.
6,247,088 B1 6/2001 Seo et al.
6,317,352 B1 11/2001 Halbert et al.
6,400,637 B1 6/2002 Akamatsu et al.
6,408,356 B1 6/2002 Dell
6,414,868 B1 7/2002 Wong et al.
6,415,374 B1 7/2002 Faue et al.
6,446,158 B1 9/2002 Karabatsos
6,446,184 B2 9/2002 Dell et al.
6,453,381 B1 9/2002 Yuan et al.
6,470,417 B1 10/2002 Kolor et al.
6,502,161 B1 12/2002 Perego et al.
6,518,794 B2 2/2003 Coteus et al.
6,526,473 B1 2/2003 Kim
6,530,007 B2 3/2003 Olarig et al.
6,530,033 B1 3/2003 Raynham et al.
6,553,450 B1 4/2003 Dodd et al.
6,618,320 B2 9/2003 Hasegawa et al.
6,621,496 B1 9/2003 Ryan
6,625,081 B2 9/2003 Roohparvar et al.
6,625,687 B1 9/2003 Halbert et al.
6,636,935 B1 10/2003 Ware et al.
6,646,949 B1 11/2003 Ellis et al.
6,658,509 B1 12/2003 Bonella et al.
6,674,684 B1 1/2004 Shen
6,681,301 B1 1/2004 Mehta et al.
6,683,372 B1 1/2004 Wong et al.
6,697,888 B1 2/2004 Halbert et al.
6,705,877 B1 3/2004 Li et al.
6,717,885 B2 4/2004 Lai
6,738,880 B2 5/2004 Lai et al.
6,742,098 B1 5/2004 Halbert et al.
6,754,797 B2 6/2004 Wu et al.
6,785,189 B2 8/2004 Jacobs et al.
6,788,592 B2 9/2004 Nakata et al.
6,807,125 B2 10/2004 Coteus et al.
6,807,650 B2 * 10/2004 Lamb et al. 716/101
6,813,196 B2 11/2004 Park et al.
6,834,014 B2 12/2004 Yoo et al.
6,854,042 B1 2/2005 Karabatsos
6,880,094 B2 4/2005 LaBerge
6,889,304 B2 5/2005 Perego et al.
6,912,615 B2 6/2005 Nicolai
6,912,628 B2 6/2005 Wicki et al.
6,925,028 B2 8/2005 Hosokawa et al.
6,944,694 B2 9/2005 Pax
6,950,366 B1 9/2005 Lapidus et al.
6,961,281 B2 11/2005 Wong et al.
6,981,089 B2 12/2005 Dodd et al.
6,982,892 B2 1/2006 Lee et al.
6,982,893 B2 1/2006 Jakobs
6,990,043 B2 1/2006 Kuroda et al.
6,996,686 B2 2/2006 Doblar et al.
7,007,130 B1 2/2006 Holman
7,007,175 B2 2/2006 Chang et al.
7,046,538 B2 5/2006 Kinsley et al.
7,054,179 B2 5/2006 Cogdill et al.
7,065,626 B2 6/2006 Schumacher et al.
7,073,041 B2 7/2006 Dwyer et al.
7,078,793 B2 * 7/2006 Ruckerbauer et al. 257/686
7,120,727 B2 10/2006 Lee et al.
7,124,260 B2 * 10/2006 LaBerge et al. 711/155
7,127,584 B1 10/2006 Thompson et al.
7,130,952 B2 10/2006 Nanki et al.
7,133,960 B1 11/2006 Thompson et al.
7,133,972 B2 11/2006 Jeddeloh
7,142,461 B2 11/2006 Janzen
7,149,841 B2 12/2006 LaBerge
7,167,967 B2 1/2007 Bungo et al.
7,181,591 B2 2/2007 Tsai
7,200,021 B2 4/2007 Raghuram
7,227,910 B2 6/2007 Lipka
7,266,639 B2 9/2007 Raghuram
7,272,709 B2 9/2007 Zitlaw et al.
7,281,079 B2 10/2007 Bains et al.
7,286,436 B2 10/2007 Bhakta et al.
7,289,386 B2 10/2007 Bhakta et al.
7,346,750 B2 3/2008 Ishikawa
7,356,639 B2 4/2008 Perego et al.
7,370,238 B2 5/2008 Billick et al.
7,437,591 B1 10/2008 Wong
7,461,182 B2 12/2008 Fukushima et al.
7,471,538 B2 12/2008 Hofstra
7,532,537 B2 5/2009 Solomon et al.
7,619,912 B2 11/2009 Bhakta et al.
7,636,274 B2 12/2009 Solomon et al.
7,864,627 B2 1/2011 Bhakta et al.
7,881,150 2/2011 Solomon et al.
2001/0003198 A1 6/2001 Wu
2001/0052057 A1 12/2001 Lai
2002/0088633 A1 7/2002 Kong et al.
2003/0063514 A1 4/2003 Faue
2003/0090359 A1 5/2003 Ok
2003/0090879 A1 5/2003 Doblar et al.
2003/0191995 A1 10/2003 Abrosimov et al.
2003/0210575 A1 11/2003 Seo et al.
2004/0000708 A1 1/2004 Rapport et al.
2004/0037158 A1 2/2004 Coteus et al.
2004/0201968 A1 10/2004 Tafolla
2005/0036378 A1 2/2005 Kawaguchi et al.
2005/0281096 A1 12/2005 Bhakta et al.
2006/0044860 A1 3/2006 Kinsley et al.
2006/0117152 A1 6/2006 Amidi
2006/0126369 A1 6/2006 Raghuram
2006/0129755 A1 6/2006 Raghuram
2006/0179206 A1 8/2006 Brittain et al.
2006/0259711 A1 11/2006 Oh
2006/0267172 A1 11/2006 Nguyen et al.
2006/0277355 A1 12/2006 Ellsberry et al.
2010/0128507 A1 5/2010 Solomon et al.
2011/0016250 A1 * 1/2011 Lee et al. 710/308
2011/0016269 A1 * 1/2011 Lee et al. 711/105

FOREIGN PATENT DOCUMENTS

WO WO 94/07242 3/1994
WO WO 95/34030 12/1995
WO WO 02/058069 7/2002

WO	WO 03/017283	2/2003
WO	WO 03/069484	8/2003
WO	WO 2006/055497	5/2006

OTHER PUBLICATIONS

U.S. Appl. No. 12/774,632, filed May 5, 2010; Owned by Netlist, Inc.
U.S. Appl. No. 12/422,925, filed Apr. 13, 2009; Owned by Netlist, Inc.
U.S. Appl. No. 12/422,853, filed Apr. 13, 2009; Owned by Netlist, Inc.
U.S. Appl. No. 12/954,492, filed Nov. 24, 2010; Owned by Netlist, Inc.
U.S. Appl. No. 12/981,380, filed Nov. 29, 2010; Owned by Netlist, Inc.
U.S. Appl. No. 12/912,623, filed Oct. 26, 2010; Owned by Netlist, Inc.
Application No. 95/001,339; filed Jun. 8, 2010; Owned by Netlist, Inc.
Application No. 95/001,337; filed Jun. 4, 2010; Owned by Netlist, Inc.
Application No. 95/000,546; filed May 11, 2010; Owned by Netlist, Inc.
Application No. 95/001,381; filed Jun. 9, 2010; Owned by Netlist, Inc.
"64 & 72 Pin Zip/Simm Sram Module", JEDEC, Standard No. 21-C, www.jedec.com/download/search/4_04_01.pdf, Jun. 1997 pp. 4.4.1-1.
"Bank Striping of Data Across Internal SDRAM Banks," IP.com, IPCOM000013697D, 2000.
"Distributed Memory Mapping," IP.com, IPCOM000014788D, 2000.
"Information Huawei or FPGA-Take Five," Electronic News, 2002, p. 24.
"Method for a high-performance DRAM address mapping mechanism," IP.com, IPCOM000008164D, 2002.
Request for Inter Partes Reexamination; Reexam App. No. 95/000,577 for U.S. Pat. No. 7,289,386 filed Oct. 20, 2010.
Request for Inter Partes Reexamination; Reexam App. No. 95/000,578 for U.S. Pat. No. 7,619,912 filed Oct. 20, 2010.
Request for Inter Partes Reexamination; Reexam App. No. 95/000,579 for U.S. Pat. No. 7,619,912 filed Oct. 21, 2010.
"Method for memory probing on a multiple-DIMM bus," IP.com, IPCOM000019063D, 2003.
"Method for multiple device interface testing using a single device," IP.com, IPCOM000010054D, 2002.
"Quad Band Memory (QBMA™): DDR200/266/333 devices producing DDR400/533/667" (the "QBMA Reference"), published by the QBMA Alliance, Platform Conference, San Jose, California, Jan. 23-24, 2002.
"DDR SDRAM RDIMM Features," Micron Technology, Inc., 2002.
"PC2100 and PC1600 DDR SDRAM Registered DIMM Design Specification" JEDEC, Standard No. 21-C, Revision 1-3, Jan. 2002, pp. 4.20.4-1.
"Quad Band Memory (QBM™): DDR 200/266/333 devices producing DDR 400/533/667," Platform Conference, Jan. 23-24, 2002.
Abali, B. "Memory Expansion Technology (MXT): Software Support and Performance," IBM J. Res. & Dev., vol. 45, No. 2, 2001, pp. 287-300.
Arlington, DL Evans. "Enhancement of Memory Card Redundant Bit Usage Via Simplified Fault Alignment Exclusion," IMB Technical Disclosure Bulletin, 1987.
Arroyo et al. "Method of executing Manufacturing ROM Code Without Removing System Roms," IP.com, IPCOM000037214D, 1989.
Barr, Michael. "Programmable Logic: What's it to Ya?," Embedded Systems Programming, Jun. 1999, pp. 75-84.
Bennayoun et al. "Input/Output Chip Select Doubler," IBM Technical Disclosure Bulletin, vol. 38, No. 04 1995, pp. 237-240.
Blum et al. "Fast Multichip Memory System With Power Select Signal," IMB Technical Disclosure Bulletin, 1979.
Carvalho, Carlos; "The Gap between Processor and Memory Speeds"; ICCA '02.
Cuppu et al. "Concurrency, Latency, or System Overhead: Which Has the Largest Impact on Uniprocessor DRAM-System Performance?," IEEE, 2001, pp. 62-71.
Cuppu et al. "High-Performance DRAMs in Workstation Environments," IEEE Transactions on Computers, vol. 50, No. 11, 2001, pp. 1133-1153.
Cuppu et al. "A Performance Coparison of Contemporary DRAM Architectures," *IEEE Proceedings of the 26th International Symposium on Computer Architectures*, May 2-4, 1999, Atlanta, Geogia, pp. 1-12.
Denneau, M. "Logic Processor for Logic Simulation Machine," IBM Technical Disclosure Bulletin, vol. 25, No. 1, 1982.
Fairchild Semiconductor. "DM74LS138 DM74LS139 Decoder/Demultiplexer," Fairchild Semiconductor Corporation, 2000.
Fitzgerald et al. "Chip Select Circuit for Multi-Chip RAM Modules," IP.com, IPCOM000044404D, 1984.
Freedman, Alan. "The Computer Glossary," The Complete Illustrated Dictionary, American Management Association, 2001.
Google, Inc. v. *Netlist, Inc.*, No. 4:08-cv-04144-SBA, Netlist Inc.'s Answer to Complaint and Counterclaim (N.D. Ca. Filed Nov. 18, 2008).
Google, Inc. v. *Netlist, Inc.*, No. C 08-04144 SBA Google Inc.'s Invalidity Contentions Pursuant to PAT. L.F. 3-3, dated Apr. 13, 2009.
Google, Inc. v. *Netlist, Inc.*, No. C08 04144, Complaint for Declaratory Relief, (N.D. Ca Dated Aug. 29, 2008).
Gray, KS. "Fet Ram Chip Double Density Scheme," IP.com, IPCOM000043942D, 1984.
Grimes et al. "Access Rate/Availability Improvement Logic for Dynamic Memories," IBM Technical Disclosure Bulletin, Oct. 1982.
Gupta et al. "Designing and Implementing a Fast Crossbar Scheduler," IEEE Micro, 1999, pp. 20-28.
Hession et al. "Chip Select Technique for Multi Chip Decoding," IP.com, IPCOM000070404D, 1985.
Hewlett-Packard. "Memory technology evolution: an overview of system memory technologies," technology brief, 7th edition. 2003.
Hoare et al. "An 88-Way Multiprocessor Within an FPGA With Customizable Instructions," Proceedings of the 18th International Parallel and Distributed Processing Symposium, 2004.
Intel Corporation, 66/100 MHz PC SDRAM 64-Bit Non-ECC/Parity 144 Pin Unbuffered SO-DIMM Specification, Revision 1.0, Feb. 1999.
Intel Corporation, PC SDRAM Registered DIMM Design Support Document, Revision 1.2, Oct. 1998.
Jacob, Bruce L.; "Synchronous DRAM Architectures, Organizations, and Alternative Technologies". University of Maryland, Dec. 10, 2002.
JEDEC "JEDEC Standard: Double Data Rate (DDR) SDRAM Specification", JESD79C Mar. 2003.
JEDEC Standard JESD79D, "Double Data Rate (DDR) SDRAM Specification," published Feb. 2004.
JEDEC Standard No. 21-C, "PC2100 and PC1600 DDR SDRAM Registered DIMM Design Specification," Revision 1.3, Jan. 2002.
JEDEC Standard No. 21-C, 4.20.5-184 Pin. PC1600/2100 DDR SDRAM Unbuffered DIMM Design Specification, Revision 1.1, Release 11 b. Published Apr. 2003.
JEDEC Standard No. 21-C, 4.20.5-184 Pin. PC2700/PC2100/PC1600 DDR SDRAM Unbuffered SO-DIMM Reference Design Specification, Revision 1.1, Release 11b, Apr. 26, 2002.
JEDEC Standard No. 21-C, 4.20-2—168 Pin, PC133 SDRAM Registered Design Specification, Revision 1.4, Release 11a, Feb. 2002.
JEDEC Standard No. 21-C, 4.20-3—144 Pin, PC133 SDRAM Unbuffered SO-DIMM, Reference Design Specification, Revision 1.02, Release 11. Published Oct. 2003.
JEDEC Standard No. 21-C, DDR SDRAM PC2100 and PC1600 DDR SDRAM Registered DIMM Design Specification, Revision 1.3, Release 11b, Jan. 2002.
Jedec Standard, "Definition of the SSTV16859 2.5 V 13-Bit to 26-Bit SSTL_2 Registered Buffer for Stacked DDR DIMM Applications," JESD82-4B, May 2003.
Jin et al. "Embedded Memory in System-On-Chip Design: Architecture and Prototype Implementation," CCECE, 2003, pp. 141-146.

Jin et al. "Prototype Implementation and Evaluation of a Multibank Embedded Memory Archtecture in Programmable Logic," IEEE, 2003, pp. 13-16.
Kane et al. "Read Only Store Memory Extension," IP.com, IPCOM000082845D, 1975.
Karabatsos, C., "Quad Band Memory (QBM) Technology", Kentron Technologies, Inc., Apr. 2001, pp. 1-5.
Kellog, Mark; "PC133: SDRAM Main Memory Performance Reaches New Heights"; IBM Microelectronics, 1999.
Keltcher et al.; "The AMD Opteron Processor for Multiprocessor Servers"; IEEE Computer Society.
Kirihata et al.; "A 390-mm, 16-Bank, 1-Gb DDR SDRAM with Hybrid Bitline Architecture"; IEEE Journal of Solid-State Circuits, vol. 34, No. 11, Nov. 1999.
Kornaros et al. "A Fully-Programmable Memory Management System Optimizing Queue Handling at Multi Gigabit Rates," DAC, 2003, pp. 54-59.
Lee et al. "A banked-promotion translation lookaside buffer system," Journal of Systems Architecture, vol. 47, 2002, pp. 1065-1078.
Lee et al. "An on-chip cache compression technique to reduce decompression overhead and design complexity." Journal of Systems Architecture, vol. 46, 2000, pp. 1365-1382.
Letter from G. Hopkins Guy III, Orrick, Herrington & Sutcliffe LLP, to R. Scott Oliver, Morrison & Foerster, (Apr. 14, 2009).
Lin et al. "Designing a Modern Memory Hierarchy with Hardware Prefetching," IEEE Transactions on Computers, vol. 50, No. 11, 2001, pp. 1202-1217.
Luthra et al. "Interface Synthesis Using Memory Mapping for an FPGA Platform," Proceedings of the 21st International Conference on Computer Design, 2003.
Matick et al. "Read-Select Capability for Static Random-Access Memory," IMB Technical Disclosure Bulletin, 1985, pp. 6640-6642.
Matick, RE. "Logic and Decoder Arrangement for Controlling Spill/Wrap Boundaries of a Bit-Addressable Memory Decoder," IMB Technical Disclosure Bulletin, 1984.
MetaRAM, Inc. v. *Netlist, Inc.* No. 3:09-cv-01309-VRW, MetaRam's Reply to Netlist's Counterclaims, (N.D. Ca. Filed Jun. 3, 2009).
MetaRam, Inc. v. *Netlist, Inc.*, No. 3:09-cv-01309-VRW, Netlist's Answer to Complaint and Counterclaims, (N.D. Ca, filed May 11, 2009).
MetaRAM, Inc. v. *Netlist, Inc.*, No. C09 01309, Complaint for Patent Infringement, (N.D. Ca. Filed Mar. 25, 2009).
Meyers et al. "Use of Partially Good Memory Chips," IP.com, IPCOM000066246D, 1979.
Miles J. Murdocca et al., "Principles of Computer Architecture", Prentice Hall, 2000, pp. 249-251.
Netlist, Inc. v *MetaRam, Inc.*, No. 09-165-GMS, MetaRAM, Inc.'s Answer and Affirmative Defenses to Plaintiffs Complaint, dated Apr. 20, 2009.
Netlist, Inc. v. *MetaRAM, Inc.*, No. 1:09-ccv-00165-GMS, Complaint for Patent Infringement, (D. Del. Filed Mar. 12, 2009).
Ofek et al. "Partial Two Way Mapping Technique," IMB Technical Disclosure Bulletin, 1969.
Paldan, David. "Programmable Memory Address Decoding for Microprocessor Memory Device," IP.com, IPCOM000005486D, 1983.
Pellinger et al. "Dual Addressable Memory," IP.com, IPCOM000068610D, 1978.
Plotnick et al. "Shuffle Your Chips for Better Performance," PC Week, 1998, p. 90.
Portion of Request for Inter Partes Reexamination of U.S. Patent No. 7,289,386, corresponding to Reexam Application No. 95/000,577, in 184 pages.
Portion of Request for Inter Partes Reexamination of U.S. Patent No. 7,619,912, corresponding to Reexam Application No. 95/000,578, in 66 pages.
Portion of Request for Inter Partes Reexamination of U.S. Patent No. 7,619,912, corresponding to Reexam Application No. 95/000,579, in 32 pages.
Schubert et al. "Accelerating system integration by enhancing hardware, firmware, and co-simulation," IBM J. Res. & Dev, vol. 48, No. 3/4, May/Jul. 2004, pp. 569-581.
Skelton, MH. "Program Controlled Paging Scheme for Memory Expansion," IP.com. IPCOM000050954D, 1982.
Siegel et al. "IBM's S/390 G5 Microprocessor Design," IEEE Micro, 1999, pp. 12-23.
Smith, BA. "Chip Select Decoder Circuit," IP.com, IPCOM000063400D, 1985.
Stelzer, KC. "Planar Memory Boundary Registers with Remap Feature," IMB Technical Disclosure Bulletin, 1993.
Sunaga et al. "An Enable Signal Circuit for Multiple Small Banks," IP.com, IPCOM000015887D, 2002.
Sunaga et al. "Continuou RAS Access Method in Multiple-bank DRAM Chip," IP.com, IPCOM000123375D, 1998.
Toal et al. "A 32-Bit SoPC Implementation of a P5." Proceedings of the Eighth IEEE International Symposium on Computers and Communications, 2003, pp. 1530-1346.
Tudruj, Marek. "Dynamically reconfigurable heterogenous multiprocessor systems with transputer-controlled communication," Journal of Systems Architecture, vol. 43, 1997, pp. 27-32.
U.S. District Court Central District of California, Case No. CV09 06900, *Netlist, Inc.* vs. *Inphi Corporation*, Complaint for Patent Infringement, filed Sep. 22, 2009 in 10 pages.
U.S. District Court Central District of California, Case No. CV09 06900, *Netlist, Inc.* vs. *Inphi Corporation*, Defendant Inphi Corporation's Answer to Plaintiff's Complaint for Patent Infringement, filed Nov. 12, 2009 in 6 pages.
U.S. District Court Central District of California, Case No. CV09 06900, *Netlist, Inc.* vs. *Inphi Corporation*, Defendant Inphi Corporation's Answer to Plaintiff's First Amended Complaint for Patent Infringement, filed Feb. 11, 2010 in 9 pages.
U.S. District Court Central District of California, Case No. CV09 06900, *Netlist, Inc.* vs. *Inphi Corporation*, Defendant Inphi Corporation's Notice of Motion and Motion for Stay Pending Reexaminations and Interference Proceeding Regarding the Patents-In-Suit; Memorandum of Points and Authorities in Support Thereof, filed Apr. 21, 2010 in 28 pages.
U.S. District Court Central District of California, Case No. CV09 06900, *Netlist, Inc.* vs. *Inphi Corporation*, Plaintiff Netlist Inc's Opposition to Defendant Inphi Corporation's Motion for Stay Pending Reexaminations and Interference Proceedings Regarding the Patents-In-Suit, filed May 3, 2010 in 23 pages.
U.S. District Court Central District of California, Case No. CV09 06900, *Netlist, Inc.* vs. *Inphi Corporation*, Plaintiff Netlist, Inc's First Amended Complaint for Patent Infringement, filed Dec. 23, 2009 in 8 pages.
U.S. District Court Northern District of California, Case No. CV08 04144, *Google Inc.* v. *Netlist, Inc.*, [Redacted] Google Inc.'s Responsive Claim Construction Brief, filed Aug. 25, 2009 in 30 pages.
U.S. District Court Northern District of California, Case No. CV08 04144, *Google Inc.* v. *Netlist, Inc.*, Amended Exhibit A to Joint Claim Construction and Prehearing Statement, filed Oct. 28, 2009 in 1 page.
U.S. District Court Northern District of California, Case No. CV08 04144, *Google Inc.* v. *Netlist, Inc.*, Appendix 1 to Google's Responsive Claim Construction Brief, filed Aug. 25, 2009 in 4 pages.
U.S. District Court Northern District of California, Case No. CV08 04144, *Google Inc.* v. *Netlist, Inc.*, Attachment 1 to Exhibit B to Joint Claim Construction and Prehearing Statement, filed Jun. 12, 2009 in 7 pages.
U.S. District Court Northern District of California, Case No. CV08 04144, *Google Inc.* v. *Netlist, Inc.*, Attachment 2 to Exhibit B to Joint Claim Construction and Prehearing Statement, filed Jun. 12, 2009 in 12 pages.
U.S. District Court Northern District of California, Case No. CV08 04144, *Google Inc.* v. *Netlist, Inc.*, Complaint for Declaratory Relief, filed Aug. 29, 2008 in 49 pages.
U.S. District Court Northern District of California, Case No. CV08 04144, *Google Inc.* v. *Netlist, Inc.*, Defendant Netlist, Inc.'s Claim Construction Reply Brief, filed Sep. 22, 2009 in 19 pages.
U.S. District Court Northern District of California, Case No. CV08 04144, *Google Inc.* v. *Netlist, Inc.*, Defendant Netlist, Inc.'s Opening Claim Construction Brief, filed Jul. 29, 2009 in 21 pages.

U.S. District Court Northern District of California, Case No. CV08 04144, *Google Inc*. v. *Netlist, Inc.*, Defendant Netlist, Inc.'s Opposition to Google Inc's Motion for Summary Judgment of Invalidity, filed Jul. 6, 2010 in 13 pages.
U.S. District Court Northern District of California, Case No. CV08 04144, *Google Inc*. v. *Netlist, Inc.*, Exhibit A to Joint Claim Construction and Prehearing Statement, filed Jun. 12, 2009 in 2 pages.
U.S. District Court Northern District of California, Case No. CV08 04144, *Google Inc*. v. *Netlist, Inc.*, Exhibit B to Joint Claim Construction and Prehearing Statement, filed Jun. 12, 2009 in 36 pages.
U.S. District Court Northern District of California, Case No. CV08 04144, *Google Inc*. v. *Netlist, Inc.*, Joint Claim Construction and Prehearing Statement, filed Jun. 12, 2009 in 5 pages.
U.S. District Court Northern District of California, Case No. CV08 04144, *Google Inc*. v. *Netlist, Inc.*, Netlist, Inc.'s Answer to Complaint and Counterclaims, filed Nov. 18, 2008 in 9 pages.
U.S. District Court Northern District of California, Case No. CV08 04144, *Google Inc*. v. *Netlist, Inc.*, Order Re Claim Construction, filed Nov. 16, 2009 in 1 page.
U.S. District Court Northern District of California, Case No. CV08 04144, *Google Inc*. v. *Netlist, Inc.*, Plaintiff Google's Reply to Counterclaims, filed Dec. 8, 2008 in 4 pages.
U.S. District Court Northern District of California, Case No. CV08 04144, *Google Inc*. v. *Netlist, Inc.*, Stipulation Re: Additional Agreed-Upon Claim Constructions, filed Oct. 28, 2009 in 3 pages.
U.S. District Court Northern District of California, Case No. CV09 05718, *Netlist, Inc*. vs. *Google, Inc.*, Complaint for Patent Infringement, filed Dec. 4, 2009 in 47 pages.
U.S. District Court Northern District of California, Case No. CV09 05718, *Netlist, Inc*. vs. *Google, Inc.*, Defendant Google Inc's Responsive Claim Construction Brief, filed Aug. 4, 2010 in 27 pages.
U.S. District Court Northern District of California, Case No. CV09 05718, *Netlist, Inc*. vs. *Google, Inc.*, Exhibit A to Joint Claim Construction and Prehearing Statement under Patent L.R. 4-3, filed Jun. 25, 2010 in 2 pages.
U.S. District Court Northern District of California, Case No. CV09 05718, *Netlist, Inc*. vs. *Google, Inc.*, Exhibit B to Joint Claim Construction and Prehearing Statement under Patent L.R. 4-3, filed Jun. 25, 2010 in 23 pages.
U.S. District Court Northern District of California, Case No. CV09 05718, *Netlist, Inc*. vs. *Google, Inc.*, Google's Answer to Plaintiff's Complaint for Patent Infringement; and Assertion of Counterclaims, filed Feb. 12, 2010 in 13 pages.
U.S. District Court Northern District of California, Case No. CV09 05718, *Netlist, Inc*. vs. *Google, Inc.*, Joint Claim Construction and Prehearing Statement Under Patent Local Rule 4-3, filed Jun. 25, 2010 in 5 pages.
U.S. District Court Northern District of California, Case No. CV09 05718, *Netlist, Inc*. vs. *Google, Inc.*, Plaintiff Netlist, Inc.'s Reply Claim Construction Brief, filed Aug. 16, 2010 in 17 pages.
U.S. District Court Northern District of California, Case No. CV09 05718, *Netlist, Inc*. vs. *Google, Inc.*, Plaintiff Netlist, Inc.'s Reply to Defendant Google Inc.'s Counterclaim, filed Mar. 8, 2010 in 11 pages.
U.S. District Court Northern District of California, Case No. CV09 05718, *Netlist, Inc*. vs. *Google, Inc.*, Plaintiff Netlist, Inc's Opening Claim Construction Brief, filed Jul. 16, 2010 in 29 pages.
Yao, YL. High Density Memory Selection Circuit,: IP.com, IPCOM000078218D, 1972.
US 6,438,062, 08/2002, Curtis et al. (withdrawn)

* cited by examiner

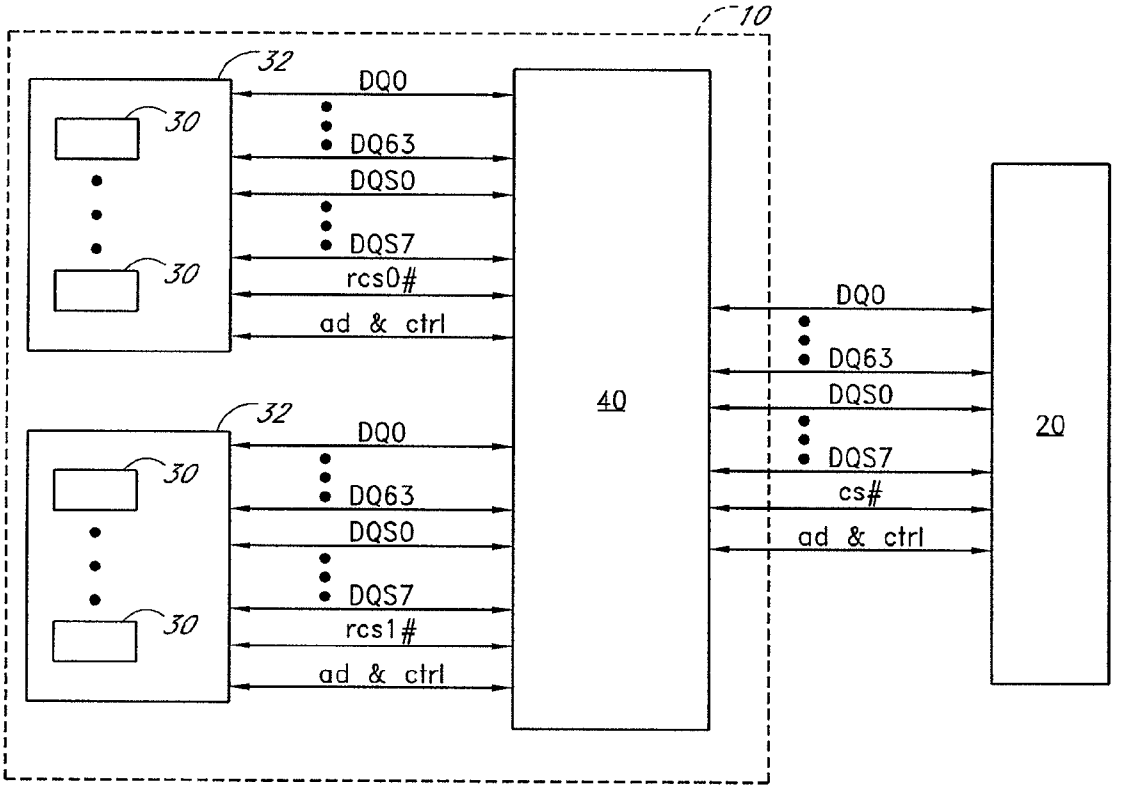
10
32
30
30
DQ0
DQ63
DQS0
DQS7
rcs0#
ad & ctrl
32
30
30
DQ0
DQ63
DQS0
DQS7
rcs1#
ad & ctrl
40
DQ0
DQ63
DQS0
DQS7
cs#
ad & ctrl
20

FIG. 1

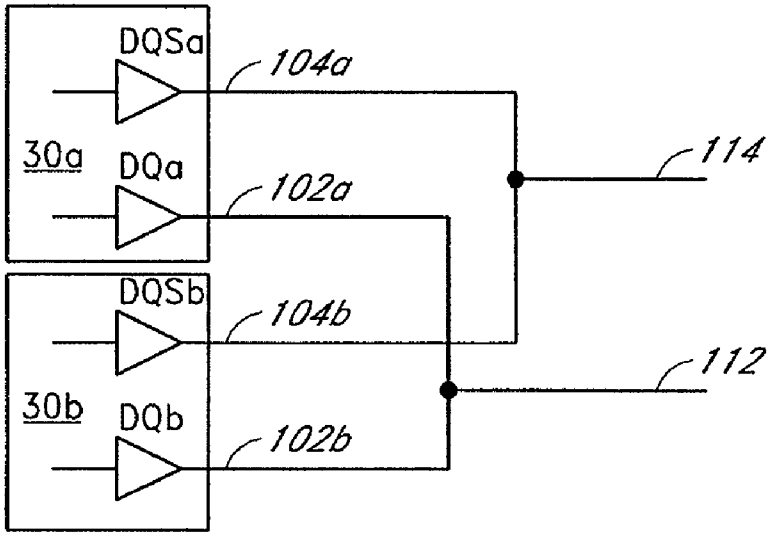

FIG. 2

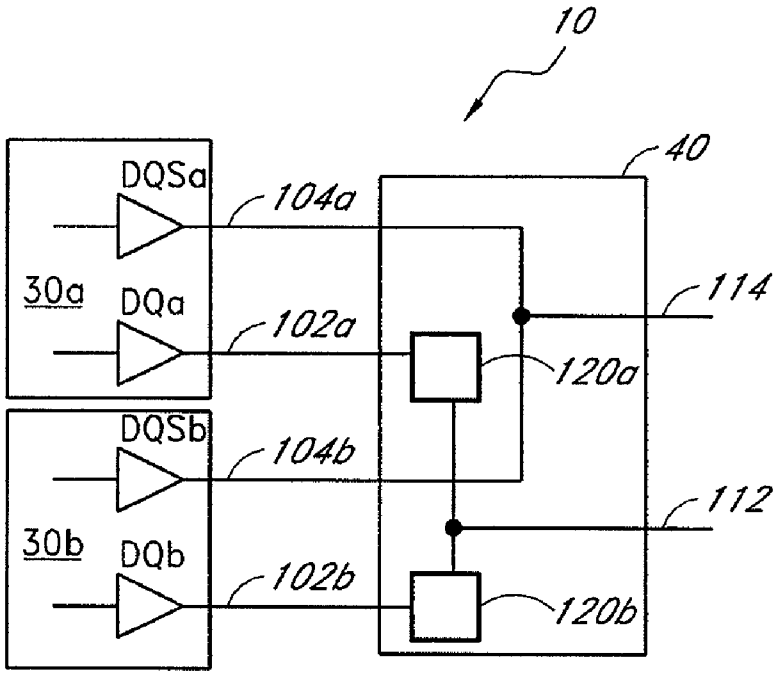
10
40
DQSa
104a
30a
DQa
102a
114
120a
DQSb
104b
112
30b
DQb
102b
120b

FIG. 3A

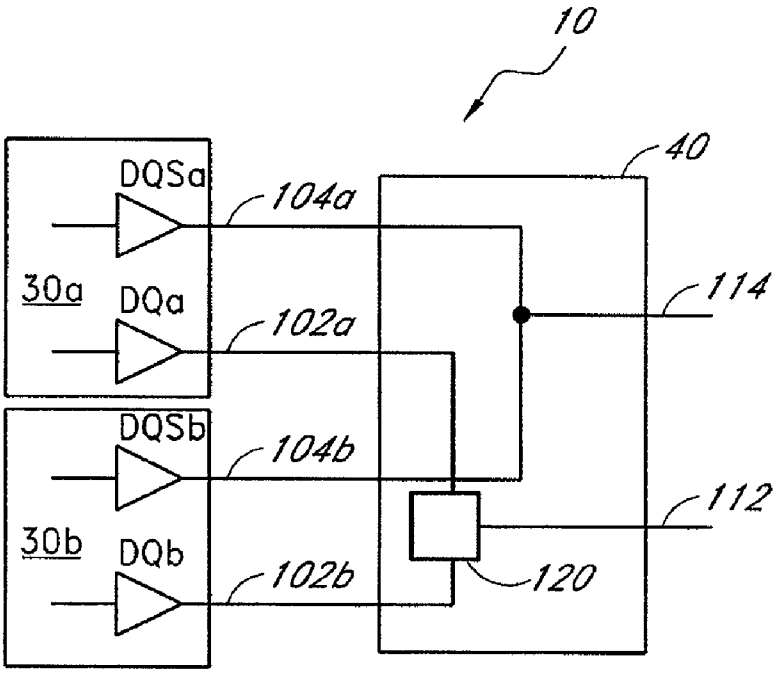
10
40
DQSa
104a
30a
DQa
102a
114
DQSb
104b
112
30b
DQb
102b
120

FIG. 3B

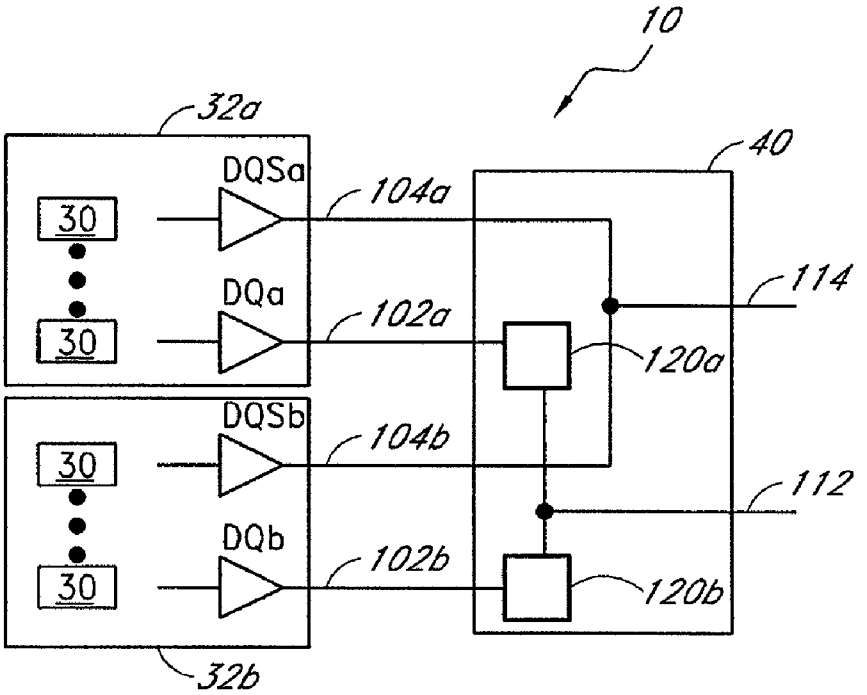
10
32a
40
DQSa
104a
30
114
DQa
102a
30
120a
DQSb
104b
30
112
DQb
102b
30
120b
32b

FIG. 4A

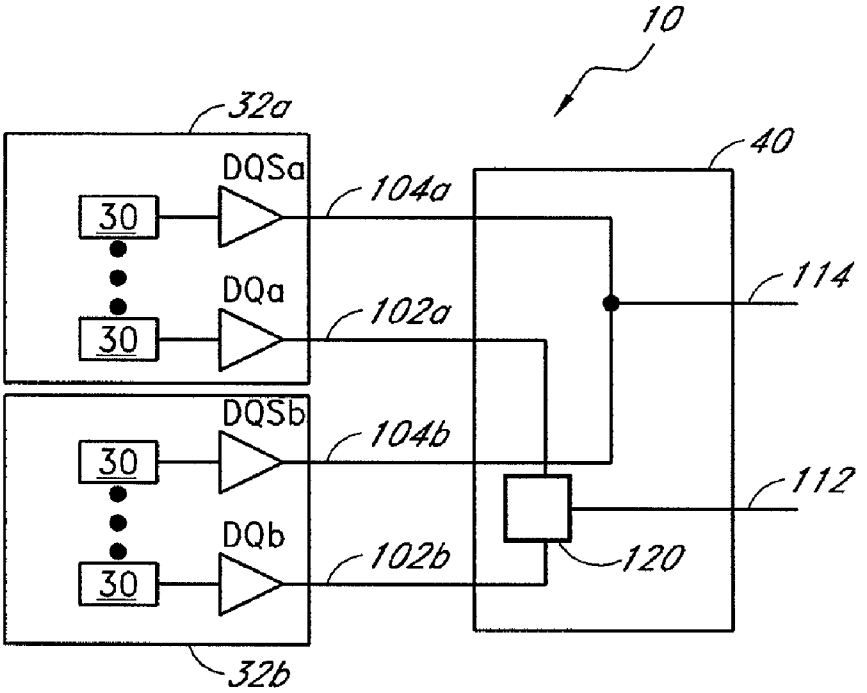
10
32a
40
DQSa
104a
30
114
DQa
102a
30
DQSb
104b
30
112
DQb
102b
30
120
32b

FIG. 4B

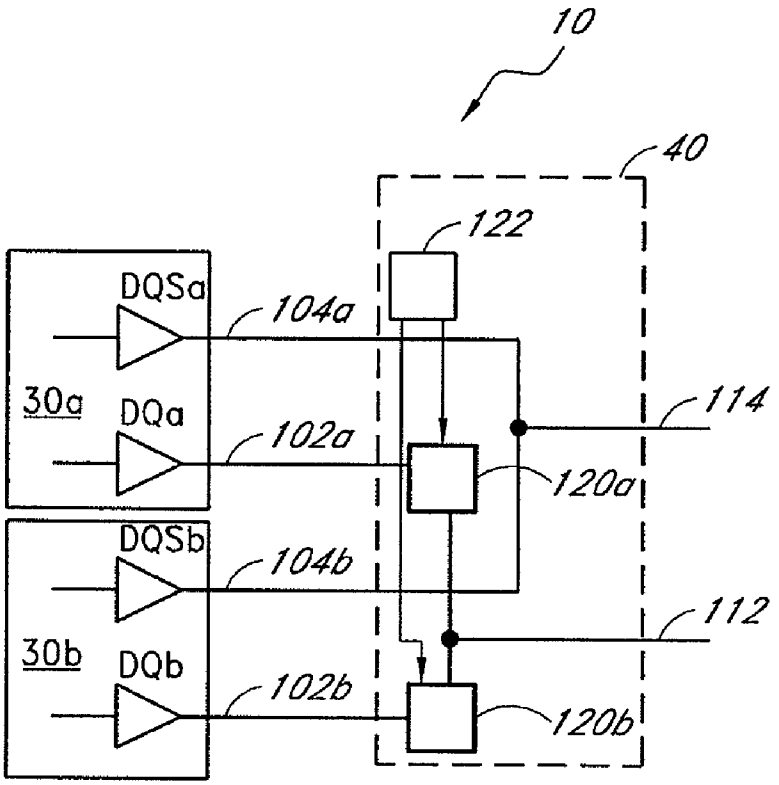
10
40
122
DQSa
104a
30a
DQa
102a
114
120a
DQSb
104b
112
30b
DQb
102b
120b

FIG. 5A

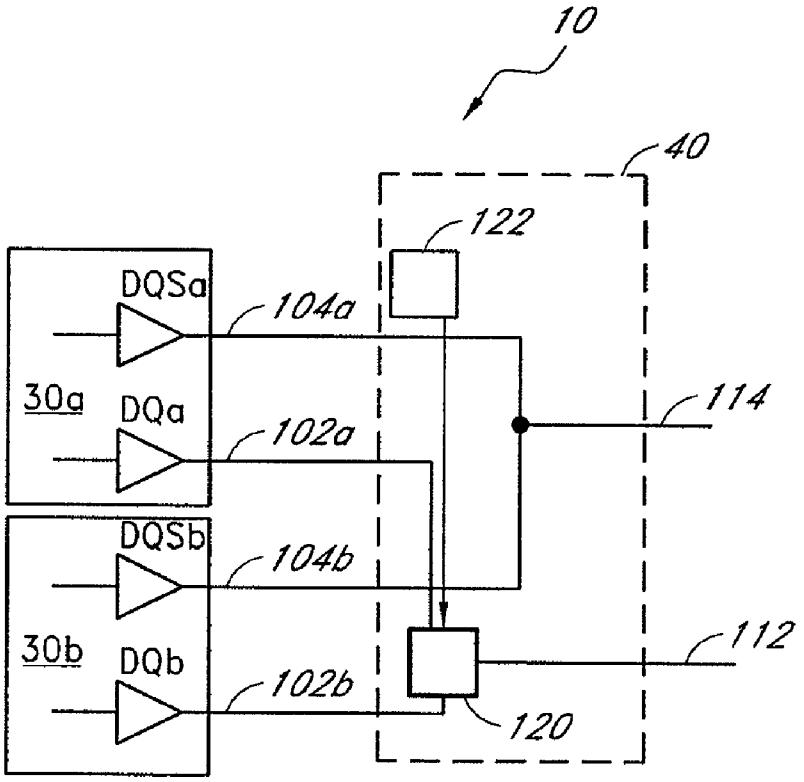
10
40
122
DQSa
104a
30a
DQa
102a
114
DQSb
104b
30b
DQb
102b
112
120

FIG. 5B

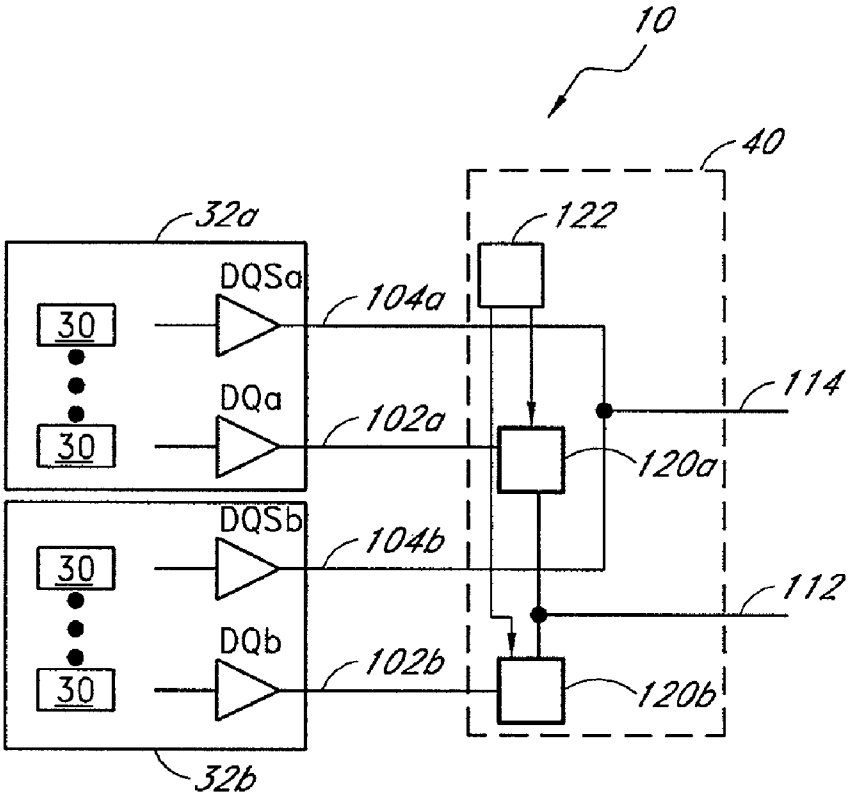
10
40
32a
122
DQSa
104a
30
30
DQa
102a
114
120a
DQSb
104b
30
30
112
DQb
102b
120b
32b

FIG. 5C

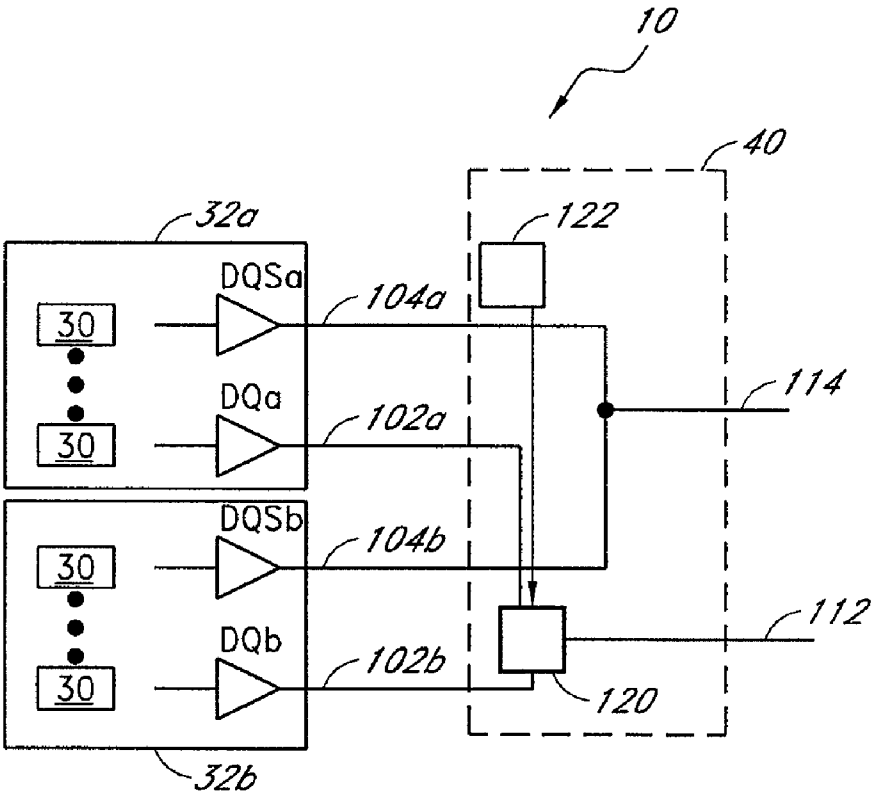
10
40
32a
122
DQSa
104a
30
30
DQa
102a
114
DQSb
104b
30
30
112
DQb
102b
120
32b

FIG. 5D

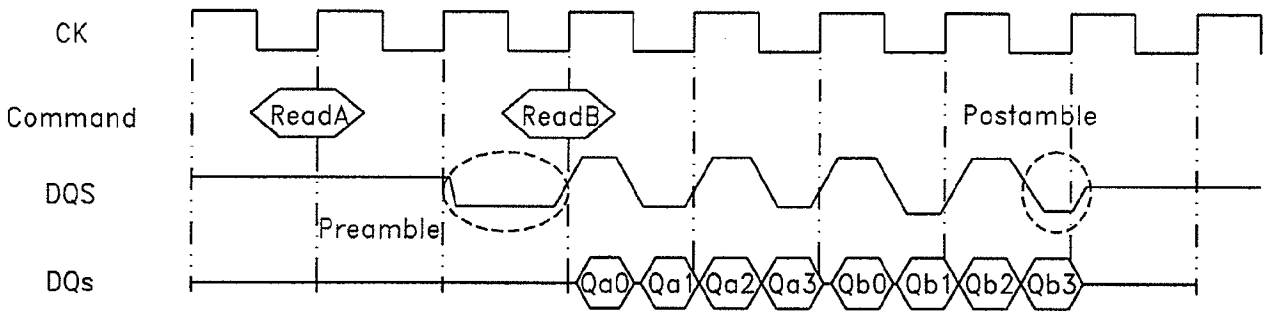
CK
Command
DQS
DQs
ReadA
ReadB
Postamble
Preamble
Qa0
Qa1
Qa2
Qa3
Qb0
Qb1
Qb2
Qb3

FIG. 6A

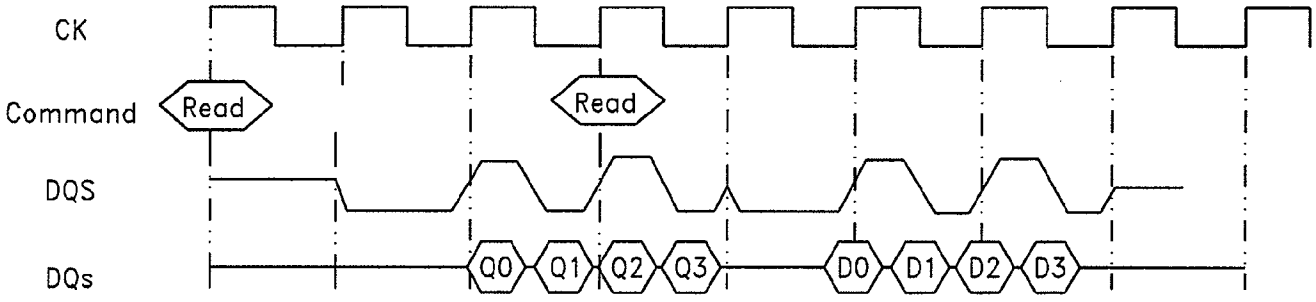
CK
Command
DQS
DQs
Read
Read
Q0
Q1
Q2
Q3
D0
D1
D2
D3

FIG. 6B

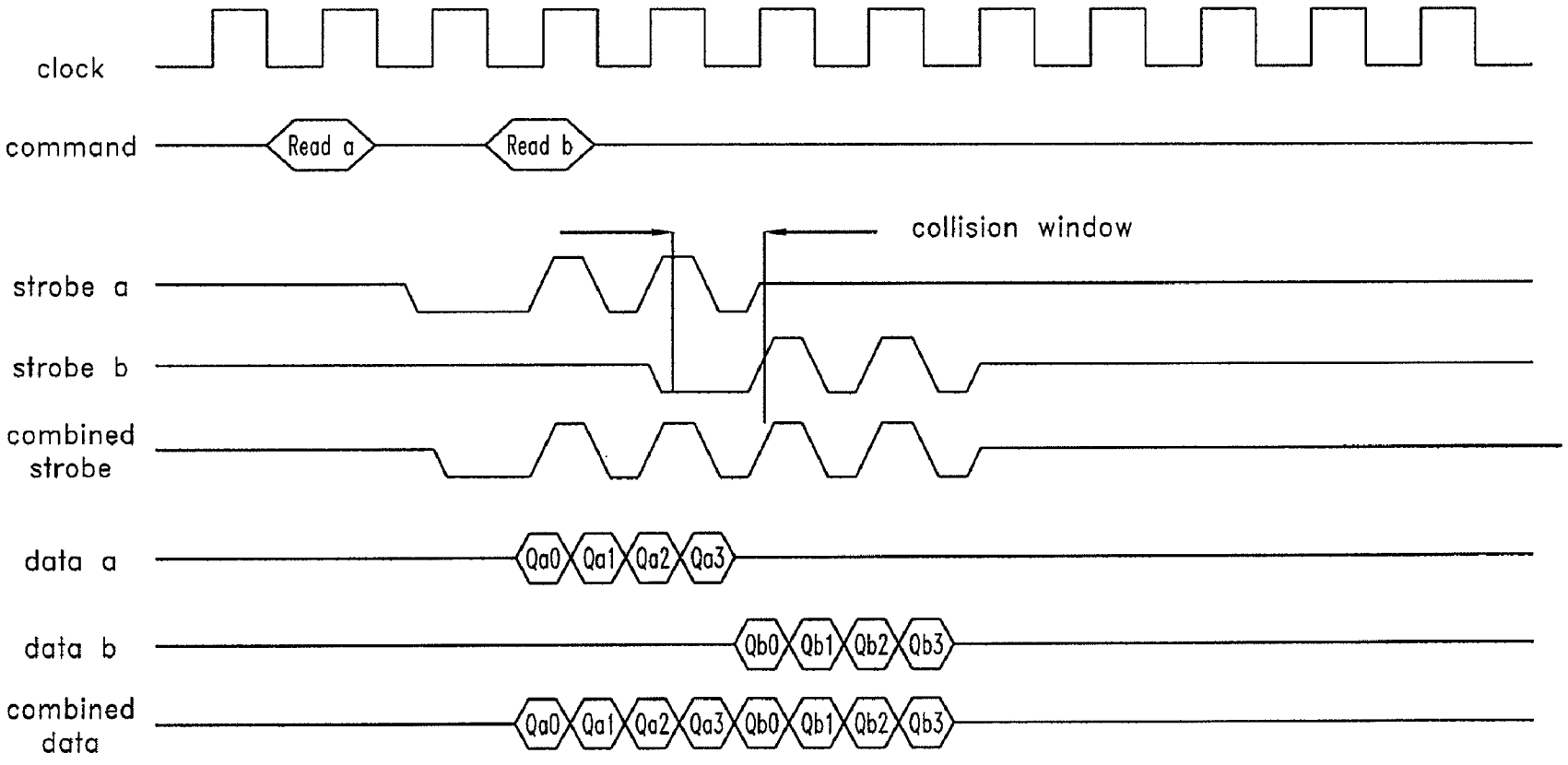
clock
command
Read a
Read b
collision window
strobe a
strobe b
combined strobe
data a
Qa0
Qa1
Qa2
Qa3
data b
Qb0
Qb1
Qb2
Qb3
combined data
Qa0
Qa1
Qa2
Qa3
Qb0
Qb1
Qb2
Qb3

FIG. 7

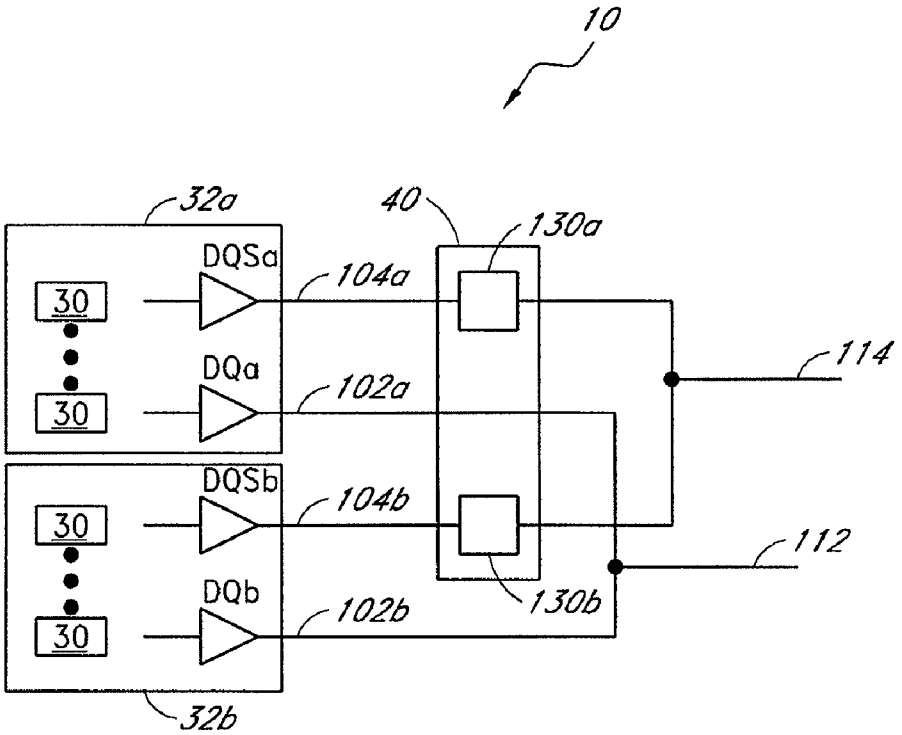
10
32a
40
130a
DQSa
104a
30
30
DQa
102a
114
DQSb
104b
30
30
112
DQb
102b
130b
32b

FIG. 8A

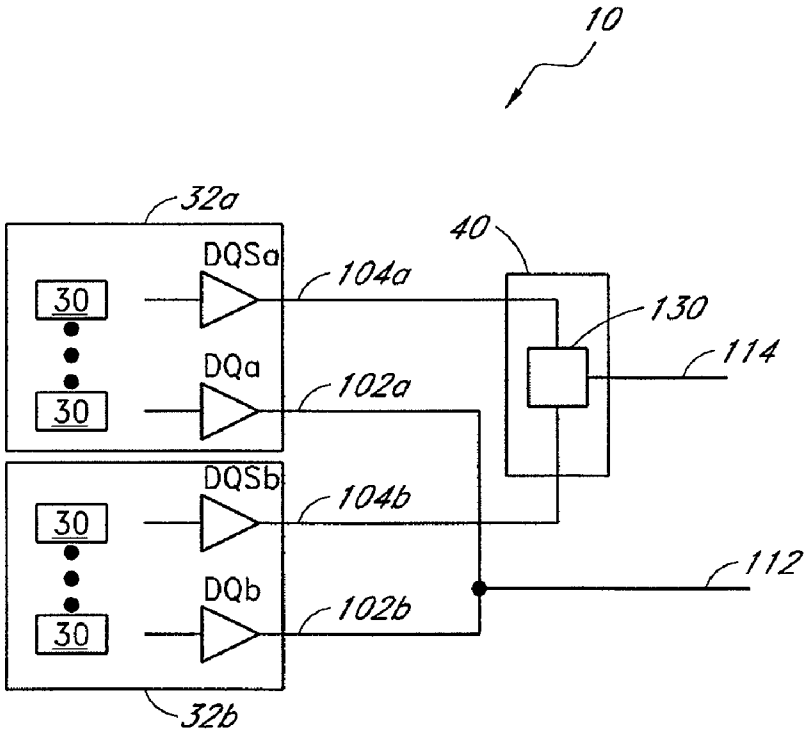
10
32a
40
DQSa
104a
30
30
130
114
DQa
102a
DQSb
104b
30
30
112
DQb
102b
32b

FIG. 8B

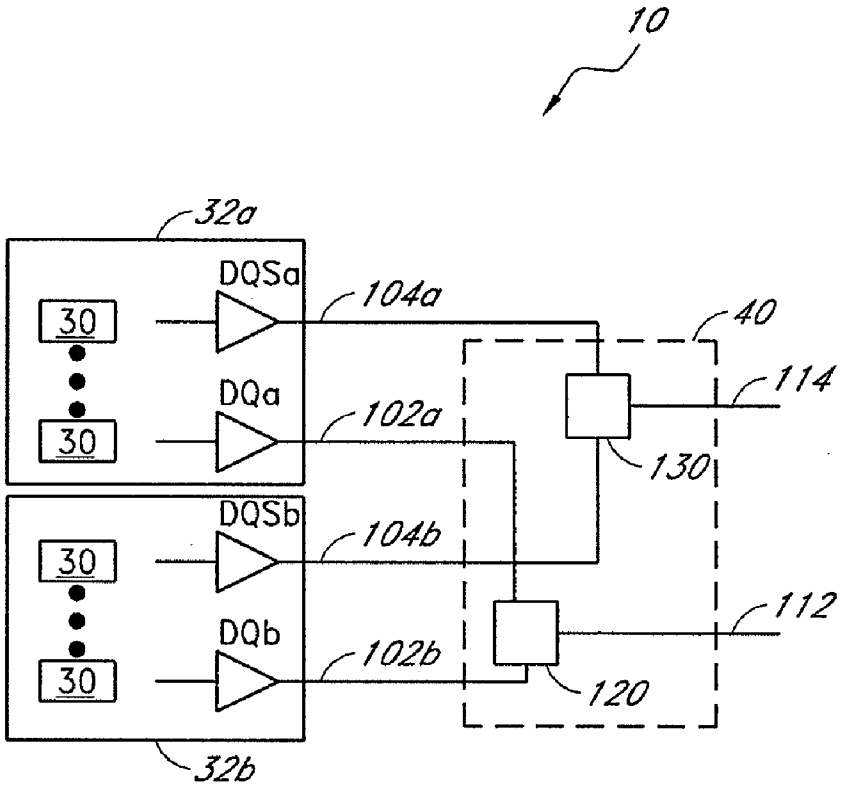
10
32a
DQSa
104a
40
30
114
DQa
102a
30
130
DQSb
104b
30
112
DQb
102b
30
120
32b

FIG. 8C

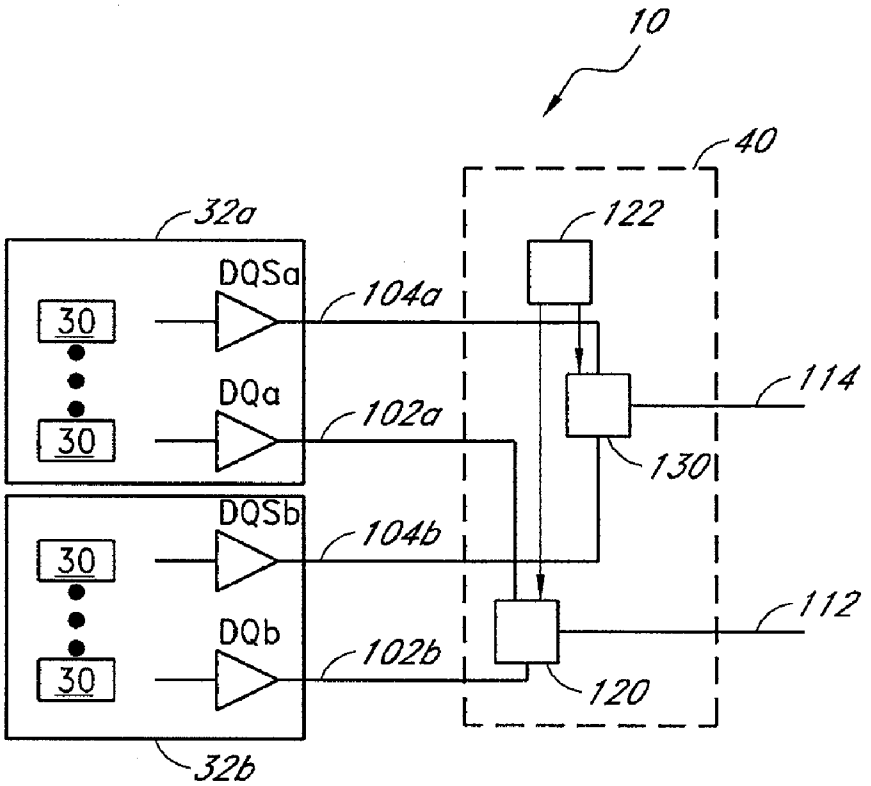
10
40
32a
122
DQSa
104a
30
114
DQa
102a
30
130
DQSb
104b
30
112
DQb
102b
30
120
32b

FIG. 8D

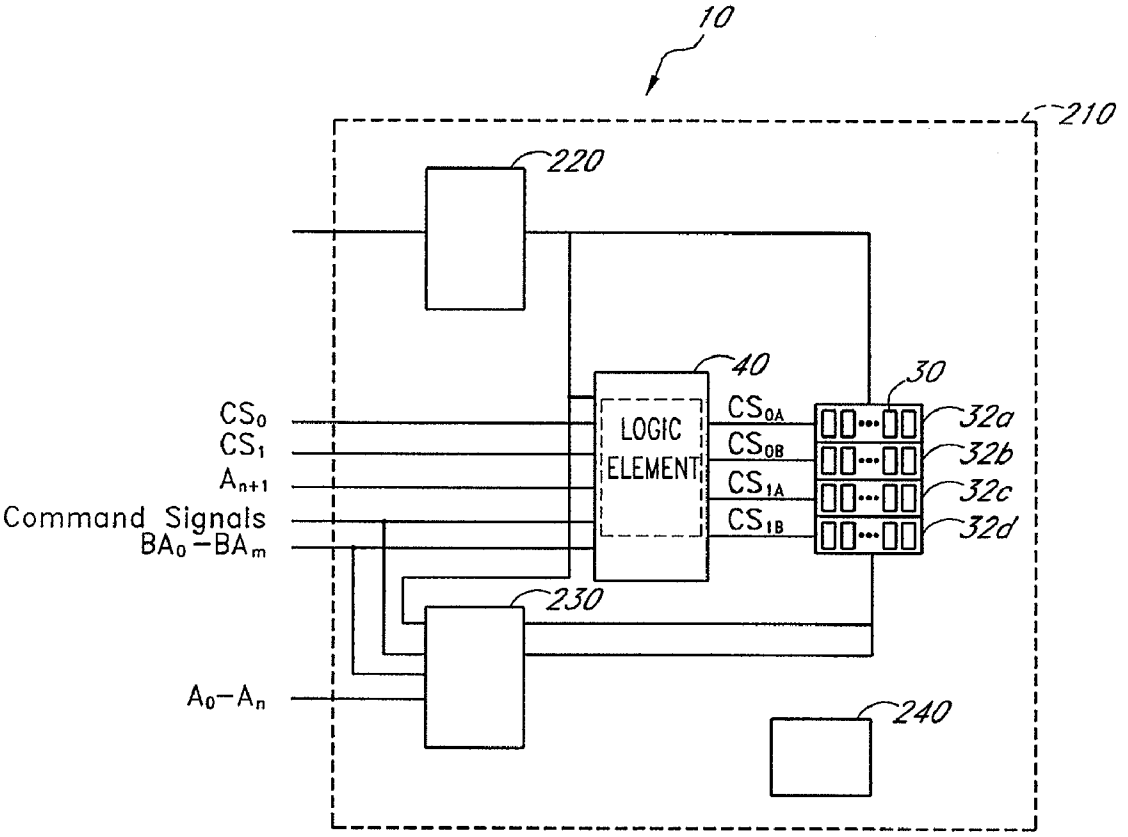
10
210
220
40
30
LOGIC ELEMENT
CS0
CS1
An+1
Command Signals
BA0 – BAm
CS0A
CS0B
CS1A
CS1B
32a
32b
32c
32d
230
A0–An
240

FIG. 9A

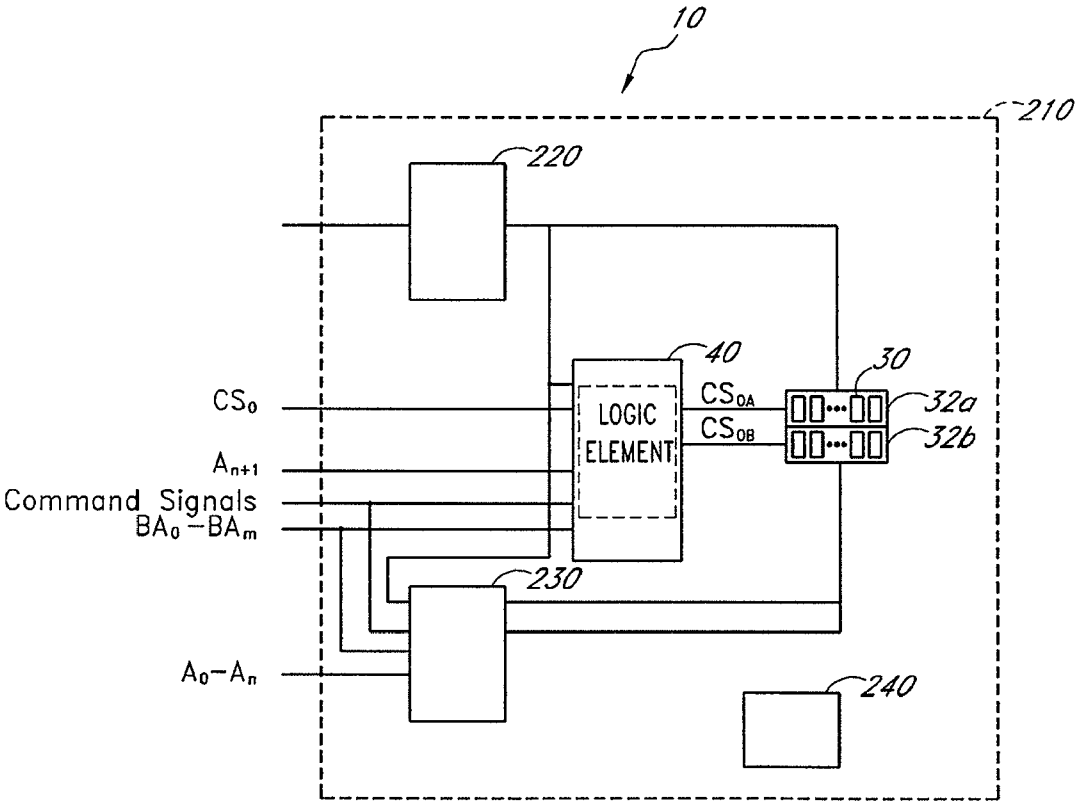
10
210
220
40
30
LOGIC ELEMENT
CS0A
CS0B
32a
32b
CS0
An+1
Command Signals
BA0 – BAm
230
A0–An
240

FIG. 9B

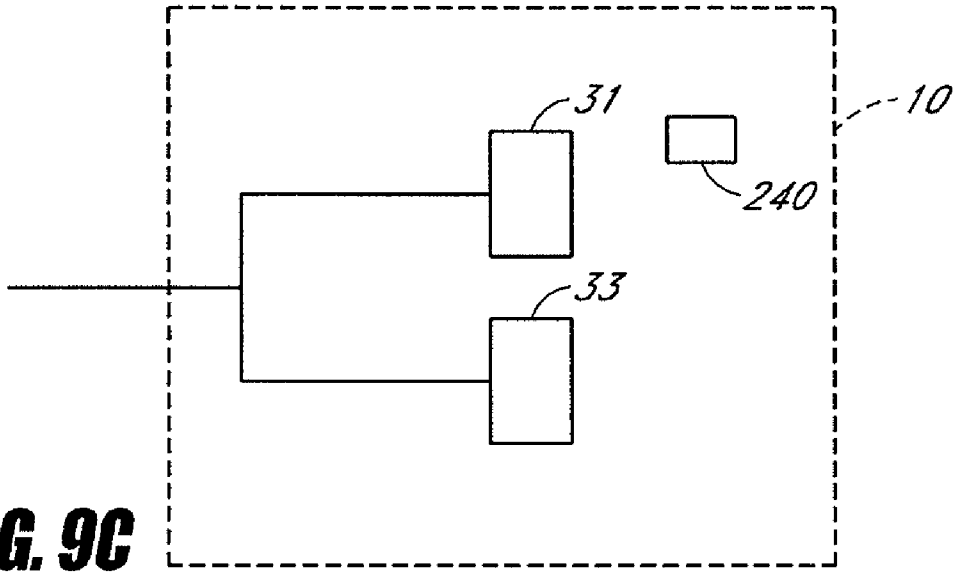

FIG. 9C

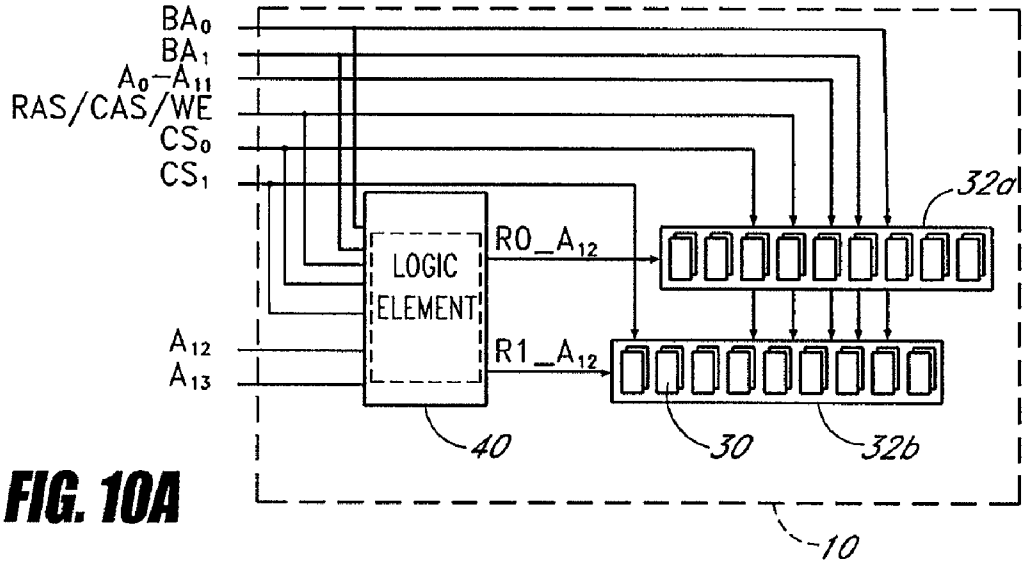

FIG. 10A

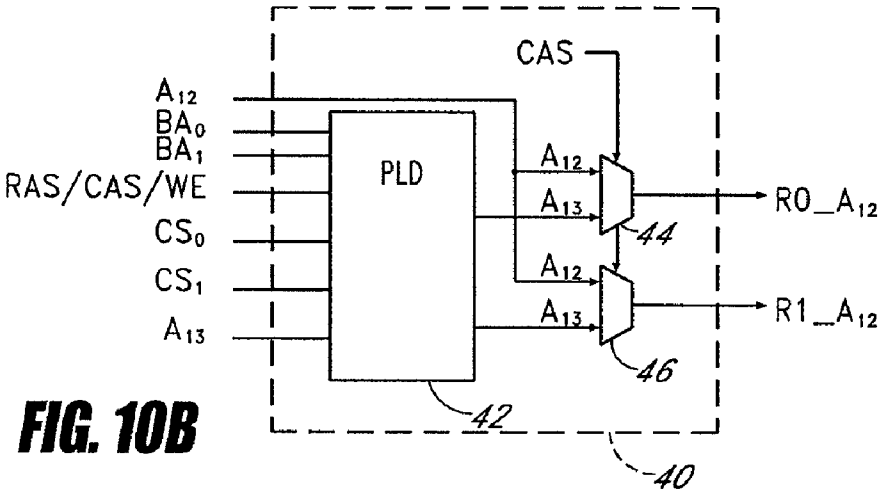

FIG. 10B

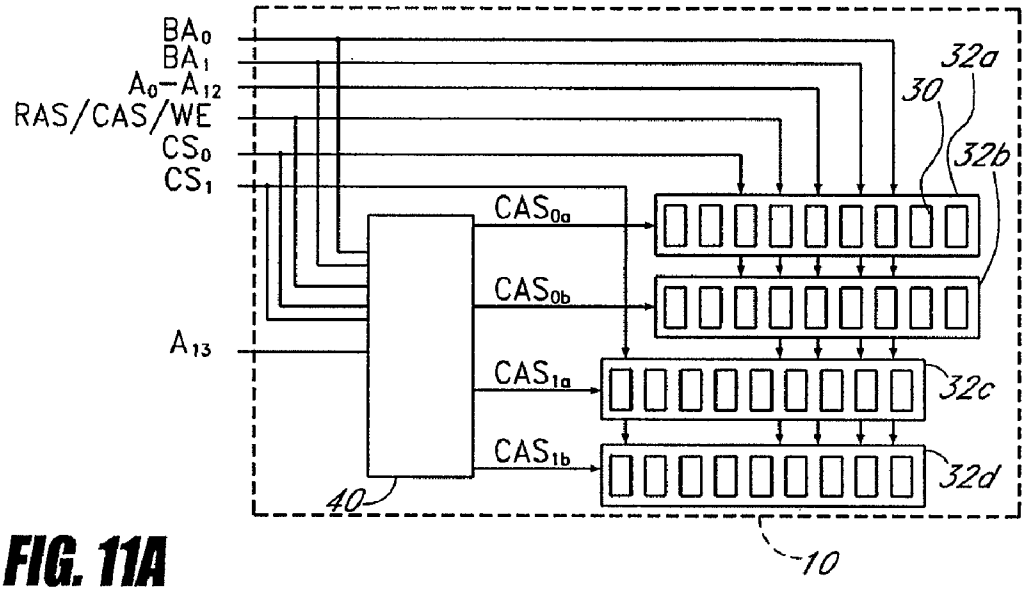

FIG. 11A

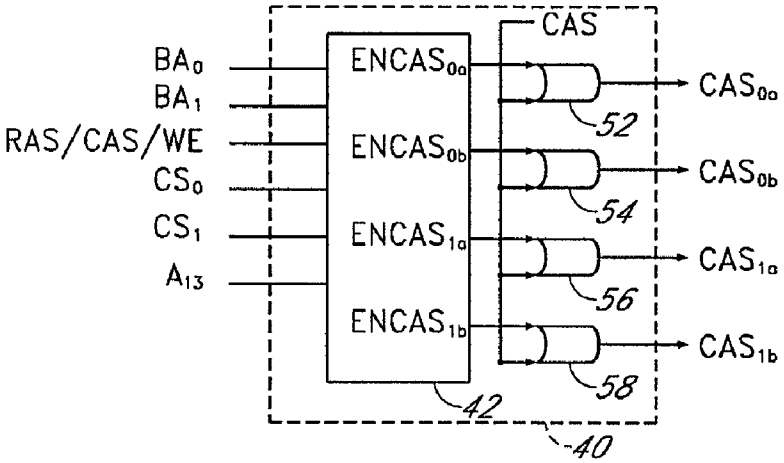

FIG. 11B

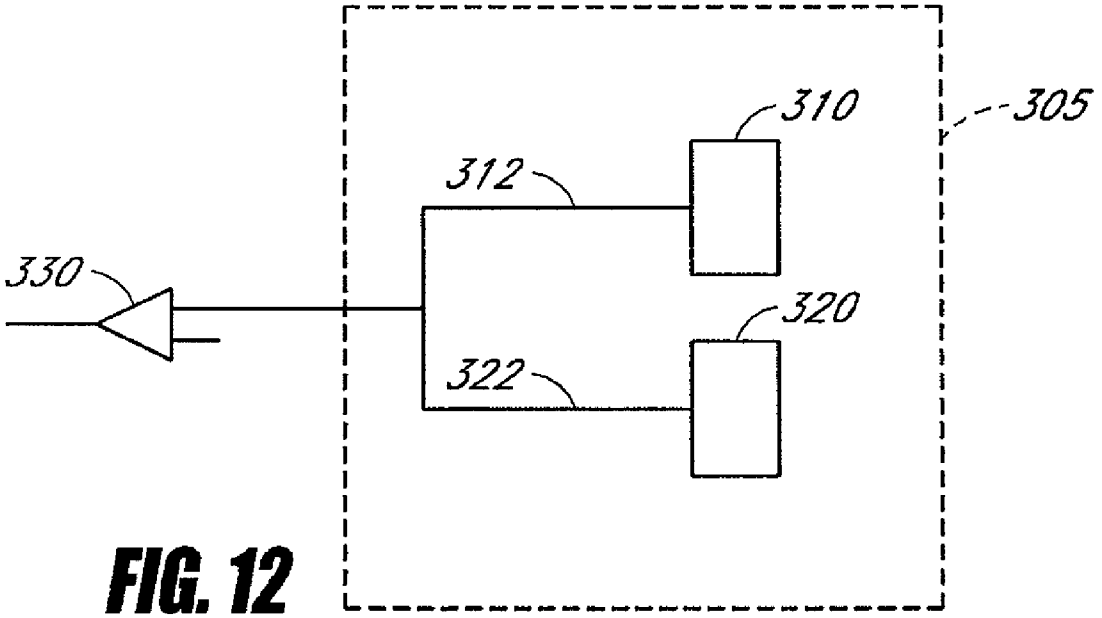

FIG. 12

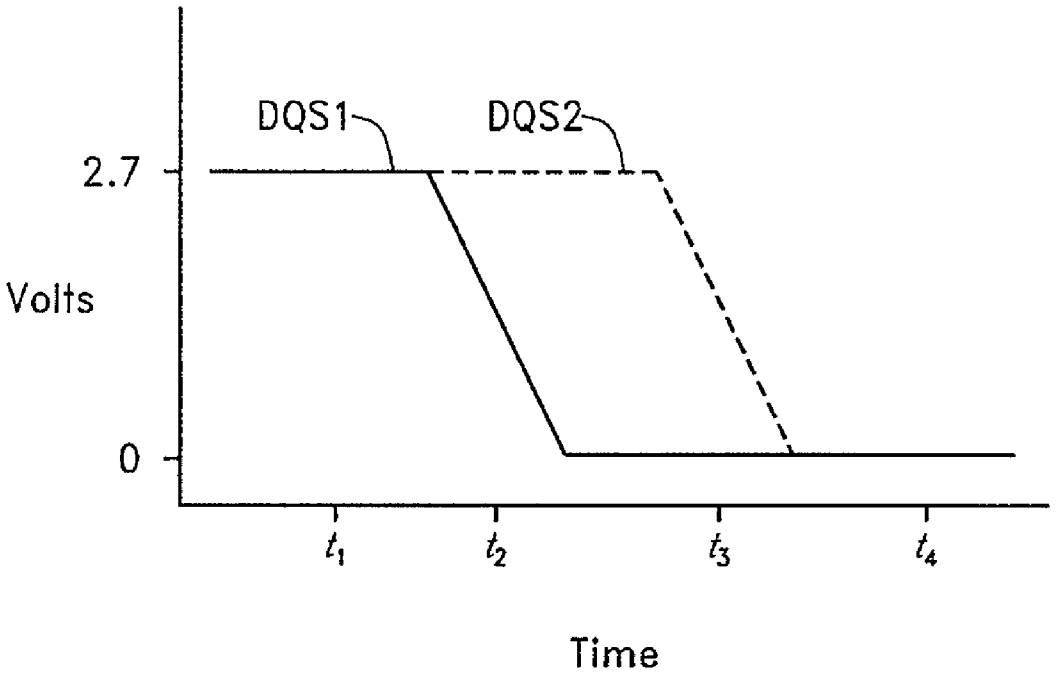

FIG. 13

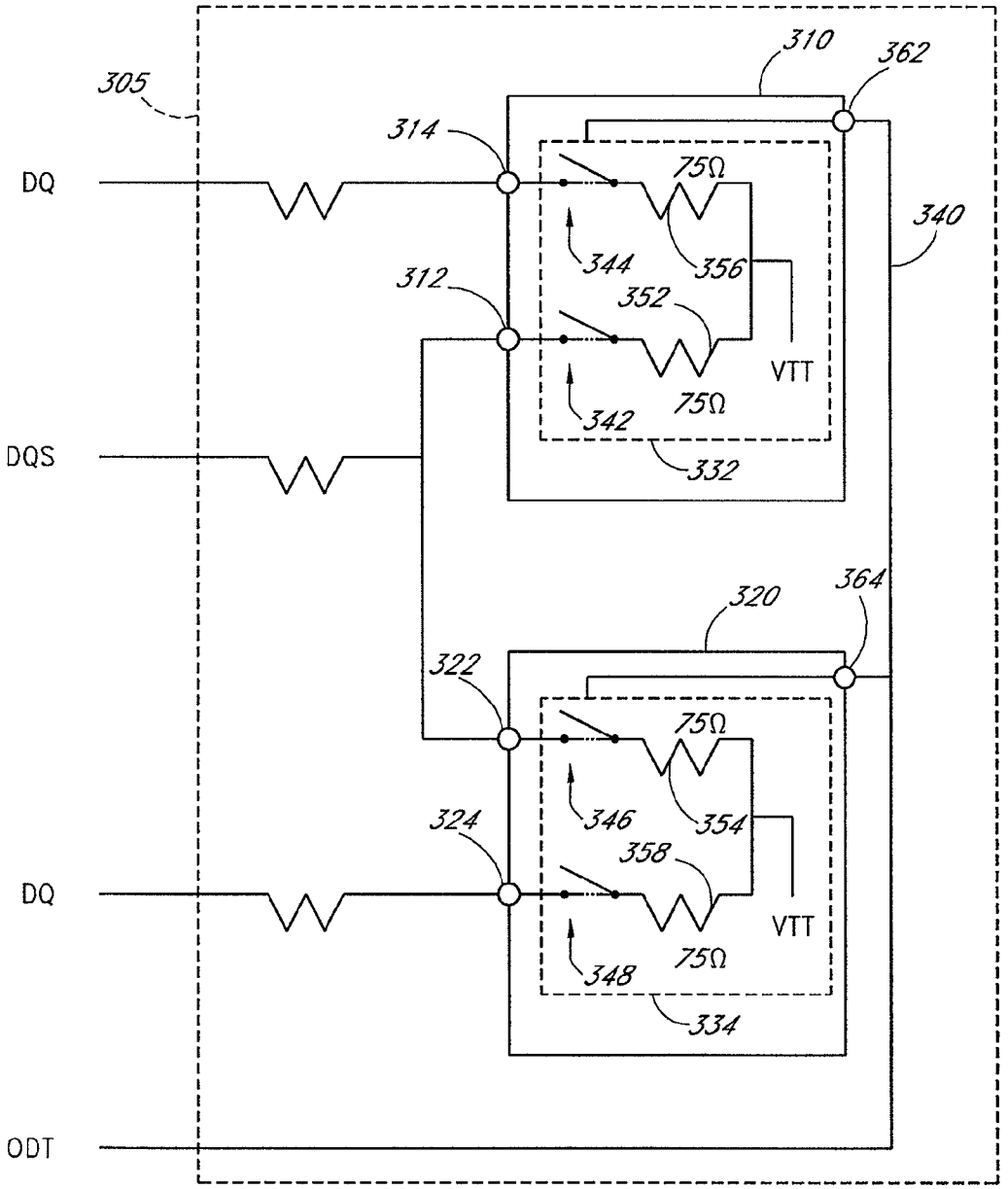
305
310
362
314
DQ
75Ω
340
344
356
312
352
VTT
342
75Ω
DQS
332
320
364
322
75Ω
346
354
324
358
DQ
VTT
75Ω
348
334
ODT

FIG. 14

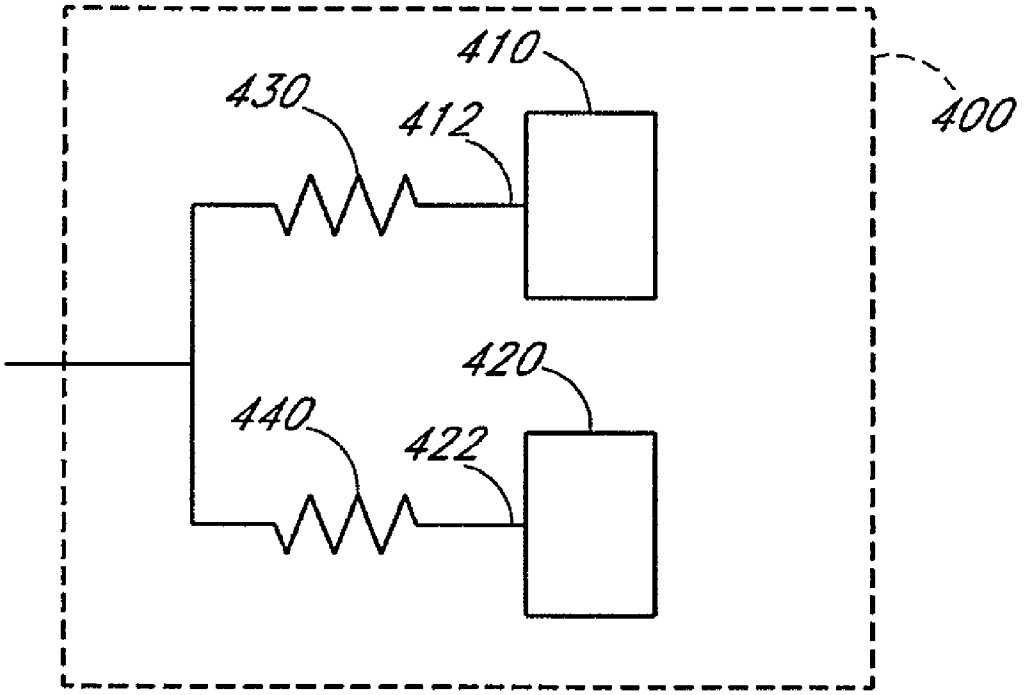

FIG. 15A

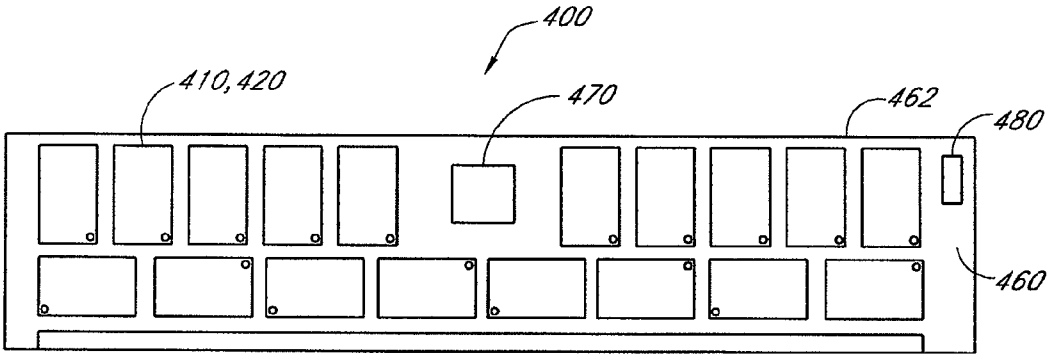

FIG. 16A

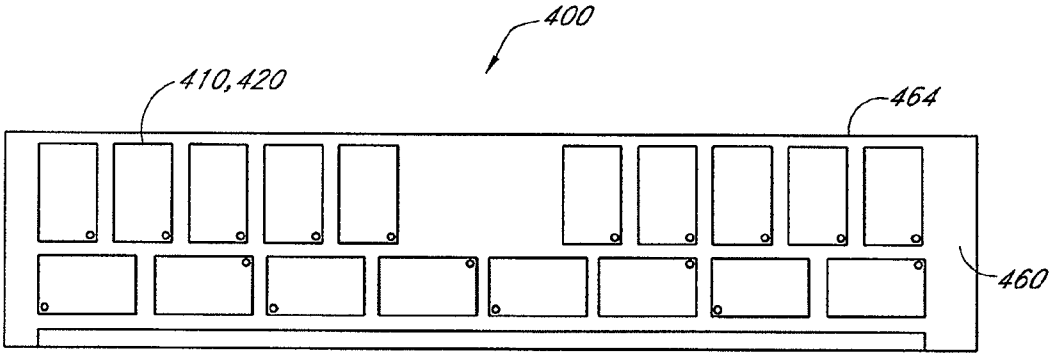

FIG. 16B

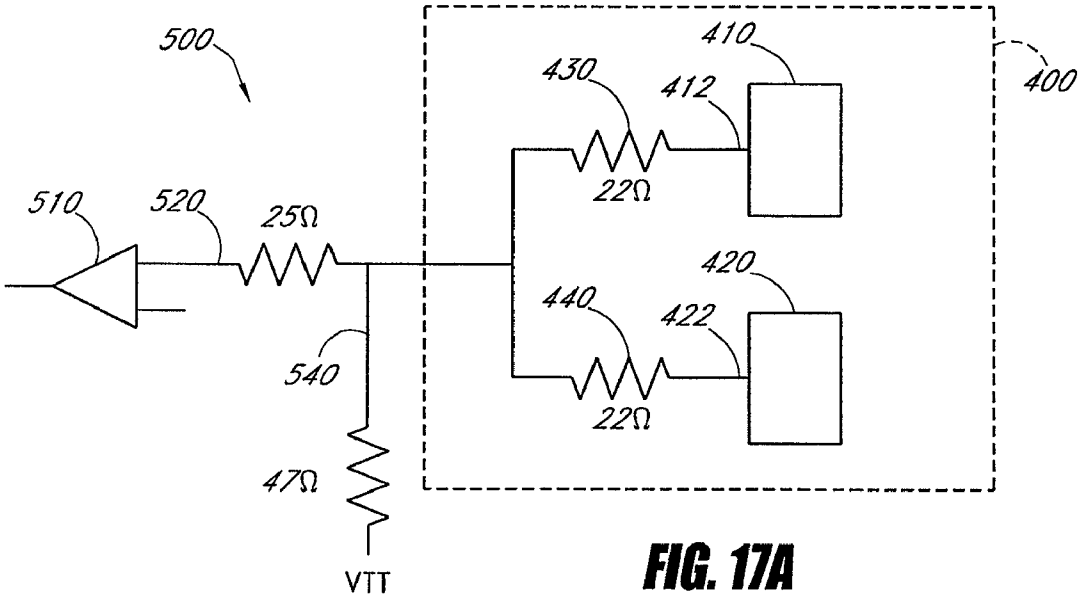

FIG. 17A

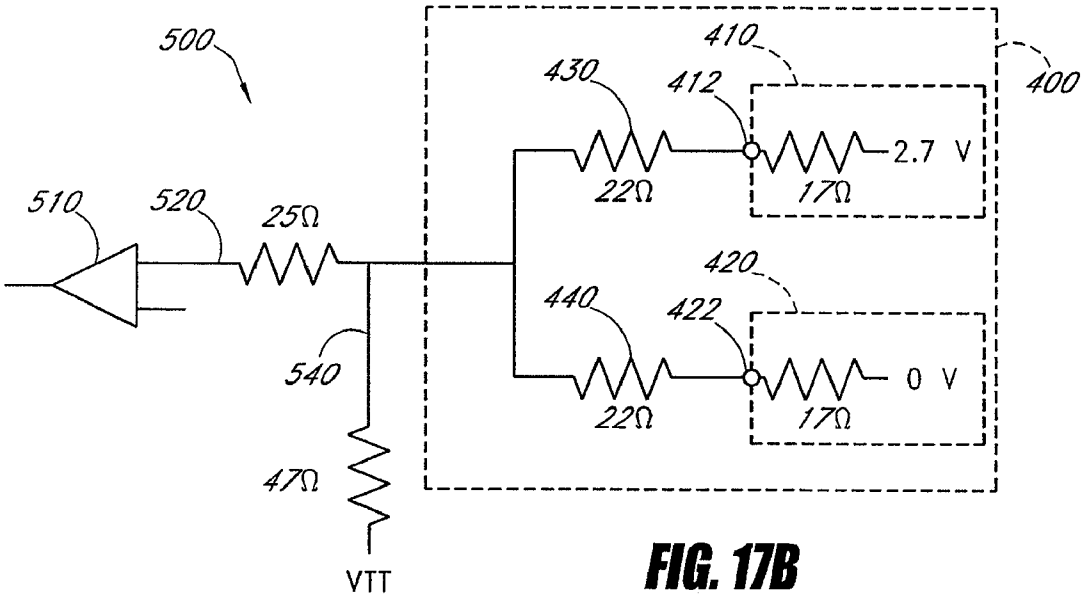

FIG. 17B

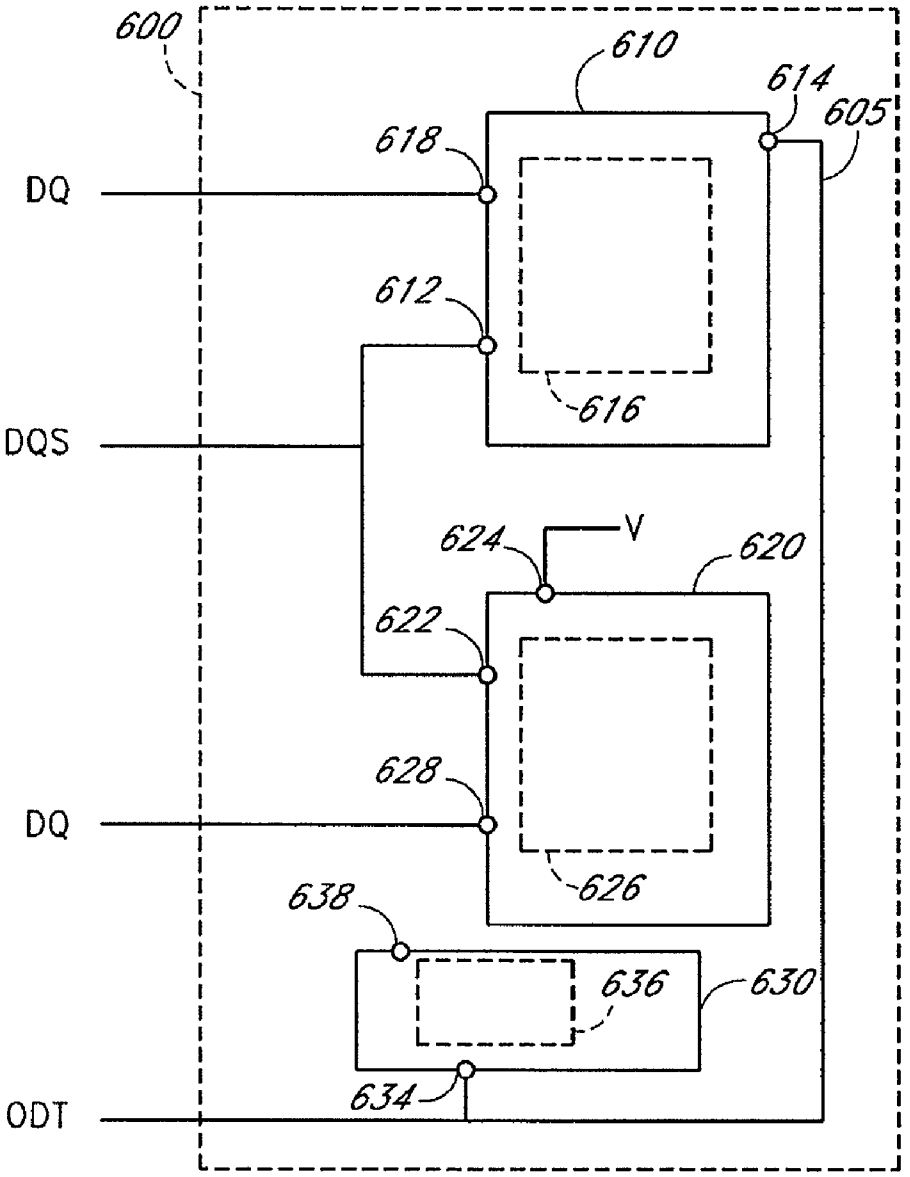
600
610
614
605
618
DQ
612
616
DQS
624
V
620
622
628
DQ
626
638
636
630
634
ODT

FIG. 18

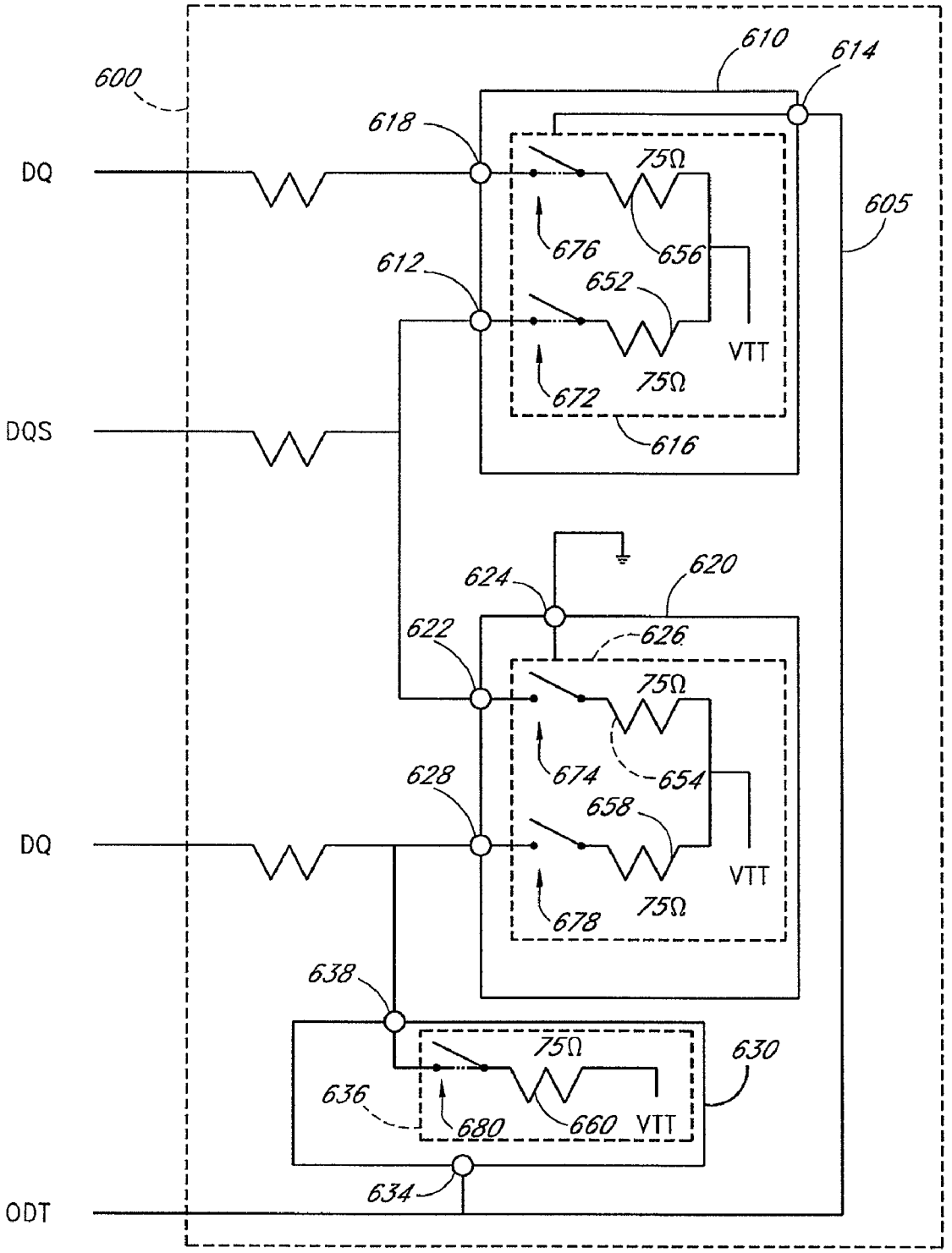
600
610
614
618
DQ
75Ω
605
676
656
612
652
VTT
672
75Ω
DQS
616
624
620
622
626
75Ω
674
654
628
658
DQ
VTT
678
75Ω
638
75Ω
630
636
680
660
VTT
634
ODT

FIG. 19

CIRCUIT PROVIDING LOAD ISOLATION AND MEMORY DOMAIN TRANSLATION FOR MEMORY MODULE

CROSS-REFERENCE TO RELATED APPLICATIONS

The present application is a continuation of U.S. patent application Ser. No. 12/629,827, filed Dec. 2, 2009, which is a continuation of U.S. patent application Ser. No. 12/408,652, filed Mar. 20, 2009, which is a continuation of U.S. patent application Ser. No. 11/335,875, filed Jan. 19, 2006, which claims the benefit of U.S. Provisional Appl. No. 60/645,087, filed Jan. 19, 2005 and which is a continuation-in-part of U.S. patent application Ser. No. 11/173,175, filed Jul. 1, 2005, which claims the benefit of U.S. Provisional Appl. No. 60/588,244, filed Jul. 15, 2004 and which is a continuation-in-part of U.S. patent application Ser. No. 11/075,395, filed Mar. 7, 2005, which claims the benefit of U.S. Provisional Appl. No. 60/550,668, filed Mar. 5, 2004, U.S. Provisional Appl. No. 60/575,595, filed May 28, 2004, and U.S. Provisional Appl. No. 60/590,038, filed Jul. 21, 2004. U.S. patent application Ser. Nos. 12/629,827, 12/408,652, 11/335,875, 11/173,175, and 11/075,395 and U.S. Provisional Appl. Nos. 60/550,668, 60/575,595, 60/590,038, 60/588,244, and 60/645,087 are each incorporated in their entirety by reference herein.

BACKGROUND OF THE INVENTION

1. Field of the Invention

The present invention relates generally to memory modules of a computer system, and more specifically to devices and methods for improving the performance, the memory capacity, or both, of memory modules.

2. Description of the Related Art

Certain types of memory modules comprise a plurality of dynamic random-access memory (DRAM) devices mounted on a printed circuit board (PCB). These memory modules are typically mounted in a memory slot or socket of a computer system (e.g., a server system or a personal computer) and are accessed by the processor of the computer system. Memory modules typically have a memory configuration with a unique combination of rows, columns, and banks which result in a total memory capacity for the memory module.

For example, a 512-Megabyte memory module (termed a "512-MB" memory module, which actually has 2^{29} or 536,870,912 bytes of capacity) will typically utilize eight 512-Megabit DRAM devices (each identified as a "512-Mb" DRAM device, each actually having 2^{29} or 536,870,912 bits of capacity). The memory cells (or memory locations) of each 512-Mb DRAM device can be arranged in four banks, with each bank having an array of 2^{24} (or 16,777,216) memory locations arranged as 2^{13} rows and 2^{11} columns, and with each memory location having a width of 8 bits. Such DRAM devices with 64M 8-bit-wide memory locations (actually with four banks of 2^{27} or 134,217,728 one-bit memory cells arranged to provide a total of 2^{26} or 67,108,864 memory locations with 8 bits each) are identified as having a "64 Mb×8" or "64M×8-bit" configuration, or as having a depth of 64M and a bit width of 8. Furthermore, certain commercially-available 512-MB memory modules are termed to have a "64M×8-byte" configuration or a "64M×64-bit" configuration with a depth of 64M and a width of 8 bytes or 64 bits.

Similarly, a 1-Gigabyte memory module (termed a "1-GB" memory module, which actually has 2^{30} or 1,073,741,824 bytes of capacity) can utilize eight 1-Gigabit DRAM devices

(each identified as a "1-Gb" DRAM device, each actually having 2^{30} or 1,073,741,824 bits of capacity). The memory locations of each 1-Gb DRAM device can be arranged in four banks, with each bank having an array of memory locations with 2^{14} rows and 2^{11} columns, and with each memory location having a width of 8 bits. Such DRAM devices with 128M 8-bit-wide memory locations (actually with a total of 2^{27} or 134,217,728 memory locations with 8 bits each) are identified as having a "128 Mb×8" or "128M×8-bit" configuration, or as having a depth of 128M and a bit width of 8. Furthermore, certain commercially-available 1-GB memory modules are identified as having a "128M×8-byte" configuration or a "128M×64-bit" configuration with a depth of 128M and a width of 8 bytes or 64 bits.

The commercially-available 512-MB (64M×8-byte) memory modules and the 1-GB (128M×8-byte) memory modules described above are typically used in computer systems (e.g., personal computers) which perform graphics applications since such "×8" configurations are compatible with data mask capabilities often used in such graphics applications. Conversely, memory modules with "×4" configurations are typically used in computer systems such as servers which are not as graphics-intensive. Examples of such commercially available "×4" memory modules include, but are not limited to, 512-MB (128M×4-byte) memory modules comprising eight 512-Mb (128 Mb×4) memory devices.

The DRAM devices of a memory module are generally arranged as ranks or rows of memory, each rank of memory generally having a bit width. For example, a memory module in which each rank of the memory module is 64 bits wide is described as having an "×64" organization. Similarly, a memory module having 72-bit-wide ranks is described as having an "×72" organization.

The memory capacity of a memory module increases with the number of memory devices. The number of memory devices of a memory module can be increased by increasing the number of memory devices per rank or by increasing the number of ranks. For example, a memory module with four ranks has double the memory capacity of a memory module with two ranks and four times the memory capacity of a memory module with one rank. Rather than referring to the memory capacity of the memory module, in certain circumstances, the memory density of the memory module is referred to instead.

During operation, the ranks of a memory module are selected or activated by address and command signals that are received from the processor. Examples of such address and command signals include, but are not limited to, rank-select signals, also called chip-select signals. Most computer and server systems support one-rank and two-rank memory modules. By only supporting one-rank and two-rank memory modules, the memory density that can be incorporated in each memory slot is limited.

Various aspects of the design of a memory module impose limitations on the size of the memory arrays of the memory module. Certain such aspects are particularly important for memory modules designed to operate at higher frequencies. Examples of such aspects include, but are not limited to, memory device (e.g., chip) densities, load fan-out, signal integrity, available rank selects, power dissipation, and thermal profiles.

SUMMARY OF THE INVENTION

In certain embodiments, a memory module comprises a plurality of memory devices and a circuit. Each memory device has a corresponding load. The circuit is electrically

coupled to the plurality of memory devices and is configured to be electrically coupled to a memory controller of a computer system. The circuit selectively isolates one or more of the loads of the memory devices from the computer system. The circuit comprises logic which translates between a system memory domain of the computer system and a physical memory domain of the memory module.

In certain embodiments, a method of using a memory module with a computer system is provided. The method comprises providing a memory module having a plurality of memory devices and a circuit. The circuit is electrically coupled to the plurality of memory devices. The circuit is configured to be electrically coupled to a computer system. Each memory device has a corresponding load. The method further comprises electrically coupling the memory module to the computer system. The method further comprises activating the circuit to selectively isolate at least one of the loads of the memory devices from the computer system and to translate between a system memory domain of the computer system and a physical memory domain of the memory module.

In certain embodiments, a memory module is connectable to a computer system. The memory module comprises a first memory device having a first data signal line and a first data strobe signal line. The memory module further comprises a second memory device having a second data signal line and a second data strobe signal line. The memory module further comprises a common data signal line connectable to the computer system. The memory module further comprises a device electrically coupled to the first data signal line, to the second data signal line, and to the common data signal line. The device selectively electrically couples the first data signal line to the common data signal line and selectively electrically couples the second data signal line to the common data signal line. The device comprises logic which translates between a system memory domain of the computer system and a physical memory domain of the memory module.

BRIEF DESCRIPTION OF THE DRAWINGS

FIG. **1** schematically illustrates an example memory module in accordance with certain embodiments described herein.

FIG. **2** schematically illustrates a circuit diagram of two memory devices of a conventional memory module.

FIGS. **3**A and **3**B schematically illustrate example memory modules having a circuit which selectively isolates one or both of the DQ data signal lines of the two memory devices from the computer system in accordance with certain embodiments described herein.

FIGS. **4**A and **4**B schematically illustrate example memory modules having a circuit which selectively isolates one or both of the DQ data signal lines of the two ranks of memory devices from the computer system in accordance with certain embodiments described herein.

FIGS. **5**A-**5**D schematically illustrate example memory modules having a circuit comprising a logic element and one or more switches operatively coupled to the logic element in accordance with certain embodiments described herein.

FIG. **6**A shows an exemplary timing diagram of a gapless read burst for a back-to-back adjacent read condition from one memory device.

FIG. **6**B shows an exemplary timing diagram with an extra clock cycle between successive read commands issued to different memory devices for successive read accesses from different memory devices.

FIG. **7** shows an exemplary timing diagram in which the last data strobe of memory device "a" collides with the preamble time interval of the data strobe of memory device "b."

FIGS. **8**A-**8**D schematically illustrate circuit diagrams of example memory modules comprising a circuit which multiplexes the DQS data strobe signal lines from one another in accordance with certain embodiments described herein.

FIG. **9**A schematically illustrates an example memory module with four ranks of memory devices compatible with certain embodiments described herein.

FIG. **9**B schematically illustrates an example memory module with two ranks of memory devices compatible with certain embodiments described herein.

FIG. **9**C schematically illustrates another example memory module in accordance with certain embodiments described herein.

FIG. **10**A schematically illustrates an exemplary memory module which doubles the rank density in accordance with certain embodiments described herein.

FIG. **10**B schematically illustrates an exemplary circuit compatible with embodiments described herein.

FIG. **11**A schematically illustrates an exemplary memory module which doubles number of ranks in accordance with certain embodiments described herein.

FIG. **11**B schematically illustrates an exemplary circuit compatible with embodiments described herein.

FIG. **12** schematically illustrates an exemplary memory module in which a data strobe (DQS) pin of a first memory device is electrically connected to a DQS pin of a second memory device while both DQS pins are active.

FIG. **13** is an exemplary timing diagram of the voltages applied to the two DQS pins due to non-simultaneous switching.

FIG. **14** schematically illustrates another exemplary memory module in which a DQS pin of a first memory device is connected to a DQS pin of a second memory device.

FIG. **15** schematically illustrates an exemplary memory module in accordance with certain embodiments described herein.

FIGS. **16**A and **16**B schematically illustrate a first side and a second side, respectively, of a memory module with eighteen 64M×4 bit, DDR-1 SDRAM FBGA memory devices on each side of a 184-pin glass-epoxy printed circuit board.

FIGS. **17**A and **17**B schematically illustrate an exemplary embodiment of a memory module in which a first resistor and a second resistor are used to reduce the current flow between the first DQS pin and the second DQS pin.

FIG. **18** schematically illustrates another exemplary memory module compatible with certain embodiments described herein.

FIG. **19** schematically illustrates a particular embodiment of the memory module schematically illustrated by FIG. **18**.

DETAILED DESCRIPTION OF EXAMPLE EMBODIMENTS

Load Isolation

FIG. **1** schematically illustrates an example memory module **10** compatible with certain embodiments described herein. The memory module **10** is connectable to a memory controller **20** of a computer system (not shown). The memory module **10** comprises a plurality of memory devices **30**, each memory device **30** having a corresponding load. The memory module **10** further comprises a circuit **40** electrically coupled to the plurality of memory devices **30** and configured to be electrically coupled to the memory controller **20** of the com-

puter system. The circuit **40** selectively isolates one or more of the loads of the memory devices from the computer system. The circuit **40** comprises logic which translates between a system memory domain of the computer system and a physical memory domain of the memory module **10**.

As used herein, the term "load" is a broad term which includes, without limitation, electrical load, such as capacitive load, inductive load, or impedance load. As used herein, the term "isolation" is a broad term which includes, without limitation, electrical separation of one or more components from another component or from one another. As used herein, the term "circuit" is a broad term which includes, without limitation, an electrical component or device, or a configuration of electrical components or devices which are electrically or electromagnetically coupled together (e.g., integrated circuits), to perform specific functions.

Various types of memory modules **10** are compatible with embodiments described herein. For example, memory modules **10** having memory capacities of 512-MB, 1-GB, 2-GB, 4-GB, 8-GB, as well as other capacities, are compatible with embodiments described herein. Certain embodiments described herein are applicable to various frequencies including, but not limited to 100 MHz, 200 MHz, 400 MHz, 800 MHz, and above. In addition, memory modules **10** having widths of 4 bytes, 8 bytes, 16 bytes, 32 bytes, or 32 bits, 64 bits, 128 bits, 256 bits, as well as other widths (in bytes or in bits), are compatible with embodiments described herein. In certain embodiments, the memory module **10** comprises a printed circuit board on which the memory devices **30** are mounted, a plurality of edge connectors configured to be electrically coupled to a corresponding plurality of contacts of a module slot of the computer system, and a plurality of electrical conduits which electrically couple the memory devices **30** to the circuit **40** and which electrically couple the circuit **40** to the edge connectors. Furthermore, memory modules **10** compatible with embodiments described herein include, but are not limited to, single in-line memory modules (SIMMs), dual in-line memory modules (DIMMs), small-outline DIMMs (SO-DIMMs), unbuffered DIMMs (UDIMMs), registered DIMMs (RDIMMs), fully-buffered DIMM (FBDIMM), rank-buffered DIMMs (RBDIMMs), mini-DIMMs, and micro-DIMMs.

Memory devices **30** compatible with embodiments described herein include, but are not limited to, random-access memory (RAM), dynamic random-access memory (DRAM), synchronous DRAM (SDRAM), and double-data-rate DRAM (e.g., SDR, DDR-1, DDR-2, DDR-3). In addition, memory devices **30** having bit widths of 4, 8, 16, 32, as well as other bit widths, are compatible with embodiments described herein. Memory devices **30** compatible with embodiments described herein have packaging which include, but are not limited to, thin small-outline package (TSOP), ball-grid-array (BGA), fine-pitch BGA (FBGA), micro-BGA (μBGA), mini-BGA (mBGA), and chip-scale packaging (CSP). Memory devices **30** compatible with embodiments described herein are available from a number of sources, including but not limited to, Samsung Semiconductor, Inc. of San Jose, Calif., Infineon Technologies AG of San Jose, Calif., and Micron Technology, Inc. of Boise, Id. Persons skilled in the art can select appropriate memory devices **30** in accordance with certain embodiments described herein.

In certain embodiments, the plurality of memory devices **30** comprises a first number of memory devices **30**. In certain such embodiments, the circuit **40** selectively isolates a second number of the memory devices **30** from the computer system, with the second number less than the first number.

In certain embodiments, the plurality of memory devices **30** are arranged in a first number of ranks. For example, in certain embodiments, the memory devices **30** are arranged in two ranks, as schematically illustrated by FIG. **1**. In other embodiments, the memory devices **30** are arranged in four ranks. Other numbers of ranks of the memory devices **30** are also compatible with embodiments described herein.

In certain embodiments, the circuit comprises a logic element selected from a group consisting of: a programmable-logic device (PLD), an application-specific integrated circuit (ASIC), a field-programmable gate array (FPGA), a custom-designed semiconductor device, and a complex programmable-logic device (CPLD). In certain embodiments, the logic element of the circuit **40** is a custom device. Sources of logic elements compatible with embodiments described herein include, but are not limited to, Lattice Semiconductor Corporation of Hillsboro, Oreg., Altera Corporation of San Jose, Calif., and Xilinx Incorporated of San Jose, Calif. In certain embodiments, the logic element comprises various discrete electrical elements, while in certain other embodiments, the logic element comprises one or more integrated circuits.

In certain embodiments, the circuit **40** further comprises one or more switches which are operatively coupled to the logic element to receive control signals from the logic element. Examples of switches compatible with certain embodiments described herein include, but are not limited to, field-effect transistor (FET) switches, such as the SN74AUC1G66 single bilateral analog switch available from Texas Instruments, Inc. of Dallas, Tex.

FIG. **2** schematically illustrates a circuit diagram of two memory devices **30***a*, **30***b* of a conventional memory module showing the interconnections between the DQ data signal lines **102***a*, **102***b* of the memory devices **30***a*, **30***b* and the DQS data strobe signal lines **104***a*, **104***b* of the memory devices **30***a*, **30***b*. Each of the memory devices **30***a*, **30***b* has a plurality of DQ data signal lines and a plurality of DQS data strobe signal lines, however, for simplicity, FIG. **2** only illustrates a single DQ data signal line and a single DQS data strobe signal line for each memory device **30***a*, **30***b*. The DQ data signal lines **102***a*, **102***b* and the DQS data strobe signal lines **104***a*, **104***b* are typically conductive traces etched on the printed circuit board of the memory module. As shown in FIG. **2**, each of the memory devices **30***a*, **30***b* has their DQ data signal lines **102***a*, **102***b* electrically coupled to a common DQ line **112** and their DQS data strobe signal lines **104***a*, **104***b* electrically coupled to a common DQS line **114**. The common DQ line **112** and the common DQS line **114** are electrically coupled to the memory controller **20** of the computer system. Thus, the computer system is exposed to the loads of both memory devices **30***a*, **30***b* concurrently.

In certain embodiments, the circuit **40** selectively isolates the loads of at least some of the memory devices **30** from the computer system. The circuit **40** of certain embodiments is configured to present a significantly reduced load to the computer system. In certain embodiments in which the memory devices **30** are arranged in a plurality of ranks, the circuit **40** selectively isolates the loads of some (e.g., one or more) of the ranks of the memory module **10** from the computer system. In certain other embodiments, the circuit **40** selectively isolates the loads of all of the ranks of the memory module **10** from the computer system. For example, when a memory module **10** is not being accessed by the computer system, the capacitive load on the memory controller **20** of the computer system by the memory module **10** can be substantially reduced to the capacitive load of the circuit **40** of the memory module **10**.

As schematically illustrated by FIGS. **3**A and **3**B, an example memory module **10** compatible with certain embodiments described herein comprises a circuit **40** which selectively isolates one or both of the DQ data signal lines **102***a*, **102***b* of the two memory devices **30***a*, **30***b* from the common DQ data signal line **112** coupled to the computer system. Thus, the circuit **40** selectively allows a DQ data signal to be transmitted from the memory controller **20** of the computer system to one or both of the DQ data signal lines **102***a*, **102***b*. In addition, the circuit **40** selectively allows one of a first DQ data signal from the DQ data signal line **102***a* of the first memory device **30***a* or a second DQ data signal from the DQ data signal line **102***b* of the second memory device **30***b* to be transmitted to the memory controller **20** via the common DQ data signal line **112** (see, e.g., triangles on the DQ and DQS lines of FIGS. **3**A and **3**B which point towards the memory controller). While various figures of the present application denote read operations by use of DQ and DQS lines which have triangles pointing towards the memory controller, certain embodiments described herein are also compatible with write operations (e.g., as would be denoted by triangles on the DQ or DQS lines pointing away from the memory controller).

For example, in certain embodiments, the circuit **40** comprises a pair of switches **120***a*, **120***b* on the DQ data signal lines **102***a*, **102***b* as schematically illustrated by FIG. **3**A. Each switch **120***a*, **120***b* is selectively actuated to selectively electrically couple the DQ data signal line **102***a* to the common DQ signal line **112**, the DQ data signal line **102***b* to the common DQ signal line **112**, or both DQ data signal lines **102***a*, **102***b* to the common DQ signal line **112**. In certain other embodiments, the circuit **40** comprises a switch **120** electrically coupled to both of the DQ data signal lines **102***a*, **102***b*, as schematically illustrated by FIG. **3**B. The switch **120** is selectively actuated to selectively electrically couple the DQ data signal line **102***a* to the common DQ signal line **112**, the DQ data signal line **102***b* to the common DQ signal line **112**, or both DQ signal lines **102***a*, **102***b* to the common DQ signal line **112**. Circuits **40** having other configurations of switches are also compatible with embodiments described herein. While each of the memory devices **30***a*, **30***b* has a plurality of DQ data signal lines and a plurality of DQS data strobe signal lines, FIGS. **3**A and **3**B only illustrate a single DQ data signal line and a single DQS data strobe signal line for each memory device **30***a*, **30***b* for simplicity. The configurations schematically illustrated by FIGS. **3**A and **3**B can be applied to all of the DQ data signal lines and DQS data strobe signal lines of the memory module **10**.

In certain embodiments, the circuit **40** selectively isolates the loads of ranks of memory devices **30** from the computer system. As schematically illustrated in FIGS. **4**A and **4**B, example memory modules **10** compatible with certain embodiments described herein comprise a first number of memory devices **30** arranged in a first number of ranks **32**. The memory modules **10** of FIGS. **4**A and **4**B comprises two ranks **32***a*, **32***b*, with each rank **32***a*, **32***b* having a corresponding set of DQ data signal lines and a corresponding set of DQS data strobe lines. Other numbers of ranks (e.g., four ranks) of memory devices **30** of the memory module **10** are also compatible with certain embodiments described herein. For simplicity, FIGS. **4**A and **4**B illustrate only a single DQ data signal line and a single DQS data strobe signal line from each rank **32**.

The circuit **40** of FIG. **4**A selectively isolates one or more of the DQ data signal lines **102***a*, **102***b* of the two ranks **32***a*, **32***b* from the computer system. Thus, the circuit **40** selectively allows a DQ data signal to be transmitted from the memory controller **20** of the computer system to the memory devices **30** of one or both of the ranks **32***a*, **32***b* via the DQ data signal lines **102***a*, **102***b*. In addition, the circuit **40** selectively allows one of a first DQ data signal from the DQ data signal line **102***a* of the first rank **32***a* and a second DQ data signal from the DQ data signal line **102***b* of the second rank **32***b* to be transmitted to the memory controller **20** via the common DQ data signal line **112**. For example, in certain embodiments, the circuit **40** comprises a pair of switches **120***a*, **120***b* on the DQ data signal lines **102***a*, **102***b* as schematically illustrated by FIG. **4**A. Each switch **120***a*, **120***b* is selectively actuated to selectively electrically couple the DQ data signal line **102***a* to the common DQ data signal line **112**, the DQ data signal line **102***b* to the common DQ data signal line **112**, or both DQ data signal lines **102***a*, **102***b* to the common DQ data signal line **112**. In certain other embodiments, the circuit **40** comprises a switch **120** electrically coupled to both of the DQ data signal lines **102***a*, **102***b*, as schematically illustrated by FIG. **4**B. The switch **120** is selectively actuated to selectively electrically couple the DQ data signal line **102***a* to the common DQ data signal line **112**, the DQ data signal line **102***b* to the common DQ data signal line **112**, or both DQ data signal lines **102***a*, **102***b* to the common DQ data signal line **112**. Circuits **40** having other configurations of switches are also compatible with embodiments described herein.

In the example embodiments schematically illustrated by FIGS. **3**A, **3**B, **4**A, and **4**B, the circuit **40** comprises a logic element which is integral with and comprises the switches **120** which are coupled to the DQ data signal lines and the DQS data strobe signal lines. In certain such embodiments, each switch **120** comprises a data path multiplexer/demultiplexer. In certain other embodiments, the circuit **40** comprises a logic element **122** which is a separate component operatively coupled to the switches **120**, as schematically illustrated by FIGS. **5**A-**5**D. The one or more switches **120** are operatively coupled to the logic element **122** to receive control signals from the logic element **122** and to selectively electrically couple one or more data signal lines to a common data signal line. Example switches compatible with embodiments described herein include, but are not limited to field-effect transistor (FET) switches, such as the SN74AUC1G66 single bilateral analog switch available from Texas Instruments, Inc. of Dallas, Tex. Example logic elements **122** compatible with certain embodiments described herein include, but are not limited to, programmable-logic devices (PLD), application-specific integrated circuits (ASIC), field-programmable gate arrays (FPGA), custom-designed semiconductor devices, and complex programmable-logic devices (CPLD). Example logic elements **122** are available from Lattice Semiconductor Corporation of Hillsboro, Oreg., Altera Corporation of San Jose, Calif., and Xilinx Incorporated of San Jose, Calif.

In certain embodiments, the load isolation provided by the circuit **40** advantageously allows the memory module **10** to present a reduced load (e.g., electrical load, such as capacitive load, inductive load, or impedance load) to the computer system by selectively switching between the two ranks of memory devices **30** to which it is coupled. This feature is used in certain embodiments in which the load of the memory module **10** may otherwise limit the number of ranks or the number of memory devices per memory module. In certain embodiments, the memory module **10** operates as having a data path rank buffer which advantageously isolates the ranks of memory devices **30** of the memory module **10** from one another, from the ranks on other memory modules, and from the computer system. This data path rank buffer of certain embodiments advantageously provides DQ-DQS paths for

each rank or sets of ranks of memory devices which are separate from one another, or which are separate from the memory controller of the computer system. In certain embodiments, the load isolation advantageously diminishes the effects of capacitive loading, jitter and other sources of noise. In certain embodiments, the load isolation advantageously simplifies various other aspects of operation of the memory module **10**, including but not limited to, setup-and-hold time, clock skew, package skew, and process, temperature, voltage, and transmission line variations.

For certain memory module applications that utilize multiple ranks of memory, increased load on the memory bus can degrade speed performance. In certain embodiments described herein, selectively isolating the loads of the ranks of memory devices **30** advantageously decreases the load on the computer system, thereby allowing the computer system (e.g., server) to run faster with improved signal integrity. In certain embodiments, load isolation advantageously provides system memory with reduced electrical loading, thereby improving the electrical topology to the memory controller **20**. In certain such embodiments, the speed and the memory density of the computer system are advantageously increased without sacrificing one for the other.

In certain embodiments, load isolation advantageously increases the size of the memory array supported by the memory controller **20** of the computer system. The larger memory array has an increased number of memory devices **30** and ranks of memory devices **30** of the memory module **10**, with a corresponding increased number of chip selects. Certain embodiments described herein advantageously provide more system memory using fewer chip selects, thereby avoiding the chip select limitation of the memory controller.

An exemplary section of Verilog code corresponding to logic compatible with a circuit **40** which provides load isolation is listed below in Example 1. The exemplary code of Example 1 corresponds to a circuit **40** comprising six FET switches for providing load isolation to DQ and DQS lines.

Example 1

```
//=================== declarations
   reg        rasN_R, casN_R, weN_R;
   wire       actv_cmd_R, pch_cmd_R, pch_all_cmd_R, ap_xfr_cmd_R_R;
   wire       xfr_cmd_R,mrs_cmd,rd_cmd_R;
//---------------------------------- DDR 2 FET
   reg        brs0N_R;   // registered chip sel
   reg        brs1N_R;   // registered chip sel
   reg        brs2N_R;   // registered chip sel
   reg        brs3N_R;   // registered chip sel
   wire       sel;
   wire       sel_01;
   wire       sel_23;
   wire       rd_R1;
   wire       wr_cmd_R,wr_R1;
   reg        rd_R2,rd_R3,rd_R4,rd_R5;
   reg        wr_R2,wr_R3,wr_R4,wr_R5;
   reg        enfet1,enfet2,enfet3,enfet4,enfet5,enfet6;
   wire       wr_01_R1,wr_23_R1;
   reg        wr_01_R2,wr_01_R3,wr_01_R4;
   reg        wr_23_R2,wr_23_R3,wr_23_R4;
   wire       rodt0_a,rodt0_b;
//=================== logic
   always @(posedge clk_in)
      begin
         brs0N_R <= brs0_in_N;    // cs0
         brs1N_R <= brs1_in_N; // cs1
         brs2N_R <= brs2_in_N;    // cs2
         brs3N_R <= brs3_in_N;    // cs3
         rasN_R <= brras_in_N ;
         casN_R <= brcas_in_N ;
         weN_R <= bwe_in_N ;
      end
assign sel = ~brs0N_R | ~brs1N_R | ~brs2N_R | ~brs3N_R ;
assign sel_01 = ~brs0N_R | ~brs1N_R ;
assign sel_23 = ~brs2N_R | ~brs3N_R ;
assign actv_cmd_R = !rasN_R & casN_R & weN_R;// activate cmd
assign pch_cmd_R = !rasN_R & casN_R & !weN_R ;// pchg cmd
assign xfr_cmd_R = rasN_R & !casN_R;                  // xfr cmd
assign mrs_cmd = !rasN_R & !casN_R & !weN_R ;  // md reg set cmd
assign rd_cmd_R = rasN_R & !casN_R & weN_R ;  // read cmd
assign wr_cmd_R = rasN_R & !casN_R & !weN_R ;// write cmd
//--------------------------------
assign rd_R1 = sel & rd_cmd_R; // rd cmd cyc 1
assign wr_R1 = sel & wr_cmd_R; // wr cmd cyc 1
//-----------------------------------
   always @(posedge clk_in)
      begin
         rd_R2 <= rd_R1 ;
         rd_R3 <= rd_R2;
         rd_R4 <= rd_R3;
         rd_R5 <= rd_R4;
//       rd0_o_R6 <= rd0_o_R5;
         wr_R2 <= wr_R1 ;
         wr_R3 <= wr_R2;
```

-continued

```
        wr_R4 <= wr_R3;
        wr_R5 <= wr_R4;
      end
//----------------------------------------
assign wr_01_R1 = sel_01 & wr_cmd_R; // wr cmd cyc 1 for cs 2 & cs3
assign wr_23_R1 = sel_23 & wr_cmd_R; // wr cmd cyc 1 for cs 2 & cs3
   always @(posedge clk_in)
      begin
        wr_01_R2 <= wr_01_R1 ;
        wr_01_R3 <= wr_01_R2;
        wr_01_R4 <= wr_01_R3;
        wr_23_R2 <= wr_23_R1 ;
        wr_23_R3 <= wr_23_R2;
        wr_23_R4 <= wr_23_R3;
      end
assign rodt0_ab = (rodt0)   // odt cmd from sys
        | (wr_23_R1)        // wr 1st cyc to other mks (assume single dimm per channel)
        | (wr_23_R2)        // wr 2nd cyc to other mks (assume single dimm per channel)
        | (wr_23_R3)        // wr 3rd cyc to other mks (assume single dimm per channel)
        ;
assign rodt1_ab = (rodt1)   // odt cmd from sys
        | (wr_01_R1)        // wr 1st cyc to other mks (assume single dimm per channel)
        | (wr_01_R2)        // wr 2nd cyc to other mks (assume single dimm per channel)
        | (wr_01_R3)        // wr 3rd cyc to other mks (assume single dimm per channel)
        ;
//----------------------------------------
   always @(posedge clk_in)
      begin
   if (
     | (rd_R2)              // pre-am rd
     | (rd_R3)              // 1st cyc of rd brst (cl3)
     | (rd_R4)              // 2nd cyc of rd brst (c13)
     | (wr_R1)              // pre-am wr
     | (wr_R2)              // wr brst 1st cyc
     | (wr_R3)              // wr brst 2nd cyc
     ) begin
        enfet1 <= l'b1;     // enable fet
        enfet2 <= l'b1;     // enable fet
        enfet3 <= l'b1;     // enable fet
        enfet4 <= l'b1;     // enable fet
        enfet5 <= l'b1;     // enable fet
        enfet6 <= l'b1;     // enable fet
      end
   else
      begin
        enfet1 <= l'b0;     // disable fet
        enfet2 <= l'b0;     // disable fet
        enfet3 <= l'b0;     // disable fet
        enfet4 <= l'b0;     // disable fet
        enfet5 <= l'b0;     // disable fet
        enfet6 <= l'b0;     // disable fet
      end
   end
```

Back-to-Back Adjacent Read Commands

Due to their source synchronous nature, DDR SDRAM (e.g., DDR1, DDR2, DDR3) memory devices operate with a data transfer protocol which surrounds each burst of data strobes with a pre-amble time interval and a post-amble time interval. The pre-amble time interval provides a timing window for the receiving memory device to enable its data capture circuitry when a known valid level is present on the strobe signal to avoid false triggers of the memory device's capture circuit. The post-amble time interval provides extra time after the last strobe for this data capture to facilitate good signal integrity. In certain embodiments, when the computer system accesses two consecutive bursts of data from the same memory device, termed herein as a "back-to-back adjacent read," the post-amble time interval of the first read command and the pre-amble time interval of the second read command are skipped by design protocol to increase read efficiency. FIG. **6**A shows an exemplary timing diagram of this "gapless" read burst for a back-to-back adjacent read condition from one memory device.

In certain embodiments, when the second read command accesses data from a different memory device than does the first read command, there is at least one time interval (e.g., clock cycle) inserted between the data strobes of the two memory devices. This inserted time interval allows both read data bursts to occur without the post-amble time interval of the first read data burst colliding or otherwise interfering with the pre-amble time interval of the second read data burst. In certain embodiments, the memory controller of the computer system inserts an extra clock cycle between successive read commands issued to different memory devices, as shown in the exemplary timing diagram of FIG. **6**B for successive read accesses from different memory devices.

In typical computer systems, the memory controller is informed of the memory boundaries between the ranks of memory of the memory module prior to issuing read commands to the memory module. Such memory controllers can insert wait time intervals or clock cycles to avoid collisions or interference between back-to-back adjacent read commands which cross memory device boundaries, which are referred to herein as "BBARX."

In certain embodiments described herein in which the number of ranks **32** of the memory module **10** is doubled or quadrupled, the circuit **40** generates a set of output address and command signals so that the selection decoding is transparent to the computer system. However, in certain such embodiments, there are memory device boundaries of which the computer system is unaware, so there are occasions in which BBARX occurs without the cognizance of the memory controller **20** of the computer system. As shown in FIG. **7**, the last data strobe of memory device "a" collides with the preamble time interval of the data strobe of memory device "b," resulting in a "collision window."

FIGS. **8**A-**8**D schematically illustrate circuit diagrams of example memory modules **10** comprising a circuit **40** which multiplexes the DQS data strobe signal lines **104***a*, **104***b* of two ranks **32***a*, **32***b* from one another in accordance with certain embodiments described herein. While the DQS data strobe signal lines **104***a*, **104***b* of FIGS. **8**A-**8**D correspond to two ranks **32***a*, **32***b* of memory devices **30**, in certain other embodiments, the circuit **40** multiplexes the DQS data strobe signal lines **104***a*, **104***b* corresponding to two individual memory devices **30***a*, **30***b*.

FIG. **8**A schematically illustrates a circuit diagram of an exemplary memory module **10** comprising a circuit **40** in accordance with certain embodiments described herein. In certain embodiments, BBARX collisions are avoided by a mechanism which electrically isolates the DQS data strobe signal lines **104***a*, **104***b* from one another during the transition from the first read data burst of one rank **32***a* of memory devices **30** to the second read data burst of another rank **32***b* of memory devices **30**.

In certain embodiments, as schematically illustrated by FIG. **8**A, the circuit **40** comprises a first switch **130***a* electrically coupled to a first DQS data strobe signal line **104***a* of a first rank **32***a* of memory devices **30** and a second switch **130***b* electrically coupled to a second DQS data strobe signal line **104***b* of a second rank **32***b* of memory devices **30**. In certain embodiments, the time for switching the first switch **130***a* and the second switch **130***b* is between the two read data bursts (e.g., after the last DQS data strobe of the read data burst of the first rank **32***a* and before the first DQS data strobe of the read data burst of the second rank **32***b*). During the read data burst for the first rank **32***a*, the first switch **130***a* is enabled. After the last DQS data strobe of the first rank **32***a* and before the first DQS data strobe of the second rank **32***b*, the first switch **130***a* is disabled and the second switch **130***b* is enabled.

As shown in FIG. **8**A, each of the ranks **32***a*, **32***b* otherwise involved in a BBARX collision have their DQS data strobe signal lines **104***a*, **104***b* selectively electrically coupled to the common DQS line **114** through the circuit **40**. The circuit **40** of certain embodiments multiplexes the DQS data strobe signal lines **104***a*, **104***b* of the two ranks **32***a*, **32***b* of memory devices **30** from one another to avoid a BBARX collision.

In certain embodiments, as schematically illustrated by FIG. **8**B, the circuit **40** comprises a switch **130** which multiplexes the DQS data strobe signal lines **104***a*, **104***b* from one another. For example, the circuit **40** receives a DQS data strobe signal from the common DQS data strobe signal line **114** and selectively transmits the DQS data strobe signal to the first DQS data strobe signal line **104***a*, to the second DQS data strobe signal line **104***b*, or to both DQS data strobe signal lines **104***a*, **104***b*. As another example, the circuit **40** receives a first DQS data strobe signal from the first rank **32***a* of memory devices **30** and a second DQS data strobe signal from a second rank **32***b* of memory devices **30** and selectively switches one of the first and second DQS data strobe signals to the common DQS data strobe signal line **114**.

In certain embodiments, the circuit **40** also provides the load isolation described above in reference to FIGS. **1**-**5**. For example, as schematically illustrated by FIG. **8**C, the circuit **40** comprises both the switch **120** for the DQ data signal lines **102***a*, **102***b* and the switch **130** for the DQS data strobe signal lines **104***a*, **104***b*. While in certain embodiments, the switches **130** are integral with a logic element of the circuit **40**, in certain other embodiments, the switches **130** are separate components which are operatively coupled to a logic element **122** of the circuit **40**, as schematically illustrated by FIG. **8**D. In certain such embodiments, the control and timing of the switch **130** is performed by the circuit **40** which is resident on the memory module **10**. Example switches **130** compatible with embodiments described herein include, but are not limited to field-effect transistor (FET) switches, such as the SN74AUC1G66 single bilateral analog switch available from Texas Instruments, Inc. of Dallas, Tex., and multiplexers, such as the SN74AUC2G53 2:1 analog multiplexer/demultiplexer available from Texas Instruments, Inc. of Dallas, Tex.

The circuit **40** of certain embodiments controls the isolation of the DQS data strobe signal lines **104***a*, **104***b* by monitoring commands received by the memory module **10** from the computer system and producing "windows" of operation whereby the appropriate switches **130** are activated or deactivated to enable and disable the DQS data strobe signal lines **104***a*, **104***b* to mitigate BBARX collisions. In certain other embodiments, the circuit **40** monitors the commands received by the memory module **10** from the computer system and selectively activates or deactivates the switches **120** to enable and disable the DQ data signal lines **102***a*, **102***b* to reduce the load of the memory module **10** on the computer system. In still other embodiments, the circuit **40** performs both of these functions together.

Command Signal Translation

Most high-density memory modules are currently built with 512-Megabit ("512-Mb") memory devices wherein each memory device has a 64M×8-bit configuration. For example, a 1-Gigabyte ("1-GB") memory module with error checking capabilities can be fabricated using eighteen such 512-Mb memory devices. Alternatively, it can be economically advantageous to fabricate a 1-GB memory module using lower-density memory devices and doubling the number of memory devices used to produce the desired word width. For example, by fabricating a 1-GB memory module using thirty-six 256-Mb memory devices with 64M×4-bit configuration, the cost of the resulting 1-GB memory module can be reduced since the unit cost of each 256-Mb memory device is typically lower than one-half the unit cost of each 512-Mb memory device. The cost savings can be significant, even though twice as many 256-Mb memory devices are used in place of the 512-Mb memory devices. For example, by using pairs of 512-Mb memory devices rather than single 1-Gb memory devices, certain embodiments described herein reduce the cost of the memory module by a factor of up to approximately five.

Market pricing factors for DRAM devices are such that higher-density DRAM devices (e.g., 1-Gb DRAM devices) are much more than twice the price of lower-density DRAM devices (e.g., 512-Mb DRAM devices). In other words, the price per bit ratio of the higher-density DRAM devices is greater than that of the lower-density DRAM devices. This pricing difference often lasts for months or even years after the introduction of the higher-density DRAM devices, until volume production factors reduce the costs of the newer higher-density DRAM devices. Thus, when the cost of a higher-density DRAM device is more than the cost of two lower-density DRAM devices, there is an economic incentive

for utilizing pairs of the lower-density DRAM devices to replace individual higher-density DRAM devices.

FIG. **9**A schematically illustrates an exemplary memory module **10** compatible with certain embodiments described herein. The memory module **10** is connectable to a memory controller **20** of a computer system (not shown). The memory module **10** comprises a printed circuit board **210** and a plurality of memory devices **30** coupled to the printed circuit board **210**. The plurality of memory devices **30** has a first number of memory devices **30**. The memory module **10** further comprises a circuit **40** coupled to the printed circuit board **210**. The circuit **40** receives a set of input address and command signals from the computer system. The set of input address and command signals correspond to a second number of memory devices **30** smaller than the first number of memory devices **30**. The circuit **40** generates a set of output address and command signals in response to the set of input address and command signals. The set of output address and command signals corresponds to the first number of memory devices **30**.

In certain embodiments, as schematically illustrated in FIG. **9**A, the memory module **10** further comprises a phase-lock loop device **220** coupled to the printed circuit board **210** and a register **230** coupled to the printed circuit board **210**. In certain embodiments, the phase-lock loop device **220** and the register **230** are each mounted on the printed circuit board **210**. In response to signals received from the computer system, the phase-lock loop device **220** transmits clock signals to the plurality of memory devices **30**, the circuit **40**, and the register **230**. The register **230** receives and buffers a plurality of command signals and address signals (e.g., bank address signals, row address signals, column address signals, gated column address strobe signals, chip-select signals), and transmits corresponding signals to the appropriate memory devices **30**. In certain embodiments, the register **230** comprises a plurality of register devices. While the phase-lock loop device **220**, the register **230**, and the circuit **40** are described herein in certain embodiments as being separate components, in certain other embodiments, two or more of the phase-lock loop device **220**, the register **230**, and the circuit **40** are portions of a single component. Persons skilled in the art are able to select a phase-lock loop device **220** and a register **230** compatible with embodiments described herein.

In certain embodiments, the memory module **10** further comprises electrical components which are electrically coupled to one another and are surface-mounted or embedded on the printed circuit board **210**. These electrical components can include, but are not limited to, electrical conduits, resistors, capacitors, inductors, and transistors. In certain embodiments, at least some of these electrical components are discrete, while in other certain embodiments, at least some of these electrical components are constituents of one or more integrated circuits.

In certain embodiments, the printed circuit board **210** is mountable in a module slot of the computer system. The printed circuit board **210** of certain such embodiments has a plurality of edge connections electrically coupled to corresponding contacts of the module slot and to the various components of the memory module **10**, thereby providing electrical connections between the computer system and the components of the memory module **10**.

In certain embodiments, the plurality of memory devices **30** are arranged in a first number of ranks **32**. For example, in certain embodiments, the memory devices **30** are arranged in four ranks **32***a*, **32***b*, **32***c*, **32***d*, as schematically illustrated by FIG. **9**A. In certain other embodiments, the memory devices **30** are arranged in two ranks **32***a*, **32***b*, as schematically illustrated by FIG. **9**B. Other numbers of ranks **32** of the memory devices **30** are also compatible with embodiments described herein.

As schematically illustrated by FIGS. **9**A and **9**B, in certain embodiments, the circuit **40** receives a set of input command signals (e.g., refresh, precharge) and address signals (e.g., bank address signals, row address signals, column address signals, gated column address strobe signals, chip-select signals) from the memory controller **20** of the computer system. In response to the set of input address and command signals, the circuit **40** generates a set of output address and command signals.

In certain embodiments, the set of output address and command signals corresponds to a first number of ranks in which the plurality of memory devices **30** of the memory module **10** are arranged, and the set of input address and command signals corresponds to a second number of ranks per memory module for which the computer system is configured. The second number of ranks in certain embodiments is smaller than the first number of ranks. For example, in the exemplary embodiment as schematically illustrated by FIG. **9**A, the first number of ranks is four while the second number of ranks is two. In the exemplary embodiment of FIG. **9**B, the first number of ranks is two while the second number of ranks is one. Thus, in certain embodiments, even though the memory module **10** actually has the first number of ranks of memory devices **30**, the memory module **10** simulates a virtual memory module by operating as having the second number of ranks of memory devices **30**. In certain embodiments, the memory module **10** simulates a virtual memory module when the number of memory devices **30** of the memory module **10** is larger than the number of memory devices **30** per memory module for which the computer system is configured to utilize. In certain embodiments, the circuit **40** comprises logic (e.g., address decoding logic, command decoding logic) which translates between a system memory domain of the computer system and a physical memory domain of the memory module **10**.

In certain embodiments, the computer system is configured for a number of ranks per memory module which is smaller than the number of ranks in which the memory devices **30** of the memory module **10** are arranged. In certain such embodiments, the computer system is configured for two ranks of memory per memory module (providing two chip-select signals CS_0, CS_1) and the plurality of memory modules **30** of the memory module **10** are arranged in four ranks, as schematically illustrated by FIG. **9**A. In certain other such embodiments, the computer system is configured for one rank of memory per memory module (providing one chip-select signal CS_0) and the plurality of memory modules **30** of the memory module **10** are arranged in two ranks, as schematically illustrated by FIG. **9**B.

In the exemplary embodiment schematically illustrated by FIG. **9**A, the memory module **10** has four ranks of memory devices **30** and the computer system is configured for two ranks of memory devices per memory module. The memory module **10** receives row/column address signals or signal bits (A_0-A_{n+1}), bank address signals (BA_0-BA_m), chip-select signals (CS_0 and CS_1), and command signals (e.g., refresh, precharge, etc.) from the computer system. The A_0-A_n row/column address signals are received by the register **230**, which buffers these address signals and sends these address signals to the appropriate ranks of memory devices **30**. The circuit **40** receives the two chip-select signals (CS_0, CS_1) and one row/column address signal (A_{n+1}) from the computer system. Both the circuit **40** and the register **230** receive the bank

address signals (BA_0-BA_m) and at least one command signal (e.g., refresh, precharge, etc.) from the computer system.

Logic Tables

Table 1 provides a logic table compatible with certain embodiments described herein for the selection among ranks of memory devices **30** using chip-select signals.

TABLE 1

State	CS_0	CS_1	A_{n+1}	Command	CS_{0A}	CS_{0B}	CS_{1A}	CS_{1B}
1	0	1	0	Active	0	1	1	1
2	0	1	1	Active	1	0	1	1
3	0	1	x	Active	0	0	1	1
4	1	0	0	Active	1	1	0	1
5	1	0	1	Active	1	1	1	0
6	1	0	x	Active	1	1	0	0
7	1	1	x	x	1	1	1	1

Note:
1. CS_0, CS_1, CS_{0A}, CS_{0B}, CS_{1A}, and CS_{1B} are active low signals.
2. A_{n+1} is an active high signal.
3. 'x' is a Don't Care condition.
4. Command involves a number of command signals that define operations such as refresh, precharge, and other operations.

In Logic State 1: CS_0 is active low, A_{n+1} is non-active, and Command is active. CS_{1A} is pulled low, thereby selecting Rank 0.

In Logic State 2: CS_0 is active low, A_{n+1} is active, and Command is active. CS_{0B} is pulled low, thereby selecting Rank 1.

In Logic State 3: CS_0 is active low, A_{n+1} is Don't Care, and Command is active high. CS_{0A} and CS_{0B} are pulled low, thereby selecting Ranks 0 and 1.

In Logic State 4: CS_1 is active low, A_{n+1} is non-active, and Command is active. CS_{1A} is pulled low, thereby selecting Rank 2.

In Logic State 5: CS_1 is active low, A_{n+1} is active, and Command is active. CS_{1B} is pulled low, thereby selecting Rank 3.

In Logic State 6: CS_1 is active low, A_{n+1} is Don't Care, and Command is active. CS_{1A} and CS_{1B} are pulled low, thereby selecting Ranks 2 and 3.

In Logic State 7: CS_0 and CS_1 are pulled non-active high, which deselects all ranks, i.e., CS_{0A}, CS_{0B}, CS_{1A}, and CS_{1B} are pulled high.

The "Command" column of Table 1 represents the various commands that a memory device (e.g., a DRAM device) can execute, examples of which include, but are not limited to, activation, read, write, precharge, and refresh. In certain embodiments, the command signal is passed through to the selected rank only (e.g., state 4 of Table 1). In such embodiments, the command signal (e.g., read) is sent to only one memory device or the other memory device so that data is supplied from one memory device at a time. In other embodiments, the command signal is passed through to both associated ranks (e.g., state 6 of Table 1). In such embodiments, the command signal (e.g., refresh) is sent to both memory devices to ensure that the memory content of the memory devices remains valid over time. Certain embodiments utilize a logic table such as that of Table 1 to simulate a single memory device from two memory devices by selecting two ranks concurrently.

Table 2 provides a logic table compatible with certain embodiments described herein for the selection among ranks of memory devices **30** using gated CAS signals.

TABLE 2

CS*	RAS*	CAS*	WE*	Density Bit	A_{10}	Command	CAS0*	CAS1*
1	x	x	x	x	x	NOP	x	x
0	1	1	1	x	x	NOP	1	1
0	0	1	1	0	x	ACTIVATE	1	1
0	0	1	1	1	x	ACTIVATE	1	1
0	1	0	1	0	x	READ	0	
0	1	0	1	1	x	READ	1	0
0	1	0	0	0	x	WRITE	0	1
0	1	0	0	1	x	WRITE	1	0
0	0	1	0	0	0	PRE-CHARGE	1	1
0	0	1	0	1	0	PRE-CHARGE	1	1
0	0	1	0	x	1	PRE-CHARGE	1	1
0	0	0	0	x	x	MODE REG SET	0	0
0	0	0	1	x	x	REFRESH	0	0

In certain embodiments in which the density bit is a row address bit, for read/write commands, the density bit is the value latched during the activate command for the selected bank.

Serial-Presence-Detect Device

Memory modules typically include a serial-presence detect (SPD) device **240** (e.g., an electrically-erasable-programmable read-only memory or EEPROM device) comprising data which characterize various attributes of the memory module, including but not limited to, the number of row addresses the number of column addresses, the data width of the memory devices, the number of ranks, the memory density per rank, the number of memory devices, and the memory density per memory device. The SPD device **240** communicates this data to the basic input/output system (BIOS) of the computer system so that the computer system is informed of the memory capacity and the memory configuration available for use and can configure the memory controller properly for maximum reliability and performance.

For example, for a commercially-available 512-MB (64M×8-byte) memory module utilizing eight 512-Mb memory devices each with a 64M×8-bit configuration, the SPD device contains the following SPD data (in appropriate bit fields of these bytes):

Byte **3**: Defines the number of row address bits in the DRAM device in the memory module [13 for the 512-Mb memory device].

Byte **4**: Defines the number of column address bits in the DRAM device in the memory module [11 for the 512-Mb memory device].

Byte **13**: Defines the bit width of the primary DRAM device used in the memory module [8 bits for the 512-Mb (64M×8-bit) memory device].

Byte **14**: Defines the bit width of the error checking DRAM device used in the memory module [8 bits for the 512-Mb (64M×8-bit) memory device].

Byte **17**: Defines the number of banks internal to the DRAM device used in the memory module [4 for the 512-Mb memory device].

In a further example, for a commercially-available 1-GB (128M×8-byte) memory module utilizing eight 1-Gb memory devices each with a 128M×8-bit configuration, as described above, the SPD device contains the following SPD data (in appropriate bit fields of these bytes):

Byte **3**: Defines the number of row address bits in the DRAM device in the memory module [14 for the 1-Gb memory device].

Byte **4**: Defines the number of column address bits in the DRAM device in the memory module [11 for the 1-Gb memory device].

Byte **13**: Defines the bit width of the primary DRAM device used in the memory module [8 bits for the 1-Gb (128M×8-bit) memory device].

Byte **14**: Defines the bit width of the error checking DRAM device used in the memory module [8 bits for the 1-Gb (128M×8-bit) memory device].

Byte **17**: Defines the number of banks internal to the DRAM device used in the memory module [4 for the 1-Gb memory device].

In certain embodiments, the SPD device **240** comprises data which characterize the memory module **10** as having fewer ranks of memory devices than the memory module **10** actually has, with each of these ranks having more memory density. For example, for a memory module **10** compatible with certain embodiments described herein having two ranks of memory devices **30**, the SPD device **240** comprises data which characterizes the memory module **10** as having one rank of memory devices with twice the memory density per rank. Similarly, for a memory module **10** compatible with certain embodiments described herein having four ranks of memory devices **30**, the SPD device **240** comprises data which characterizes the memory module **10** as having two ranks of memory devices with twice the memory density per rank. In addition, in certain embodiments, the SPD device **240** comprises data which characterize the memory module **10** as having fewer memory devices than the memory module **10** actually has, with each of these memory devices having more memory density per memory device. For example, for a memory module **10** compatible with certain embodiments described herein, the SPD device **240** comprises data which characterizes the memory module **10** as having one-half the number of memory devices that the memory module **10** actually has, with each of these memory devices having twice the memory density per memory device. Thus, in certain embodiments, the SPD device **240** informs the computer system of the larger memory array by reporting a memory device density that is a multiple of the memory devices **30** resident on the memory module **10**. Certain embodiments described herein advantageously do not require system level changes to hardware (e.g., the motherboard of the computer system) or to software (e.g., the BIOS of the computer system).

FIG. **9**C schematically illustrates an exemplary memory module **10** in accordance with certain embodiments described herein. The memory module **10** comprises a pair of substantially identical memory devices **31**, **33**. Each memory device **31**, **33** has a first bit width, a first number of banks of memory locations, a first number of rows of memory locations, and a first number of columns of memory locations. The memory module **10** further comprises an SPD device **240** comprising data that characterizes the pair of memory devices **31**, **33**. The data characterize the pair of memory devices **31**, **33** as a virtual memory device having a second bit width equal to twice the first bit width, a second number of banks of memory locations equal to the first number of banks, a second number of rows of memory locations equal to the first number of rows, and a second number of columns of memory locations equal to the first number of columns.

In certain such embodiments, the SPD device **240** of the memory module **10** is programmed to describe the combined pair of lower-density memory devices **31**, **33** as one virtual or pseudo-higher-density memory device. In an exemplary embodiment, two 512-Mb memory devices, each with a 128M×4-bit configuration, are used to simulate one 1-Gb memory device having a 128M×8-bit configuration. The SPD device **240** of the memory module **10** is programmed to describe the pair of 512-Mb memory devices as one virtual or pseudo-1-Gb memory device.

For example, to fabricate a 1-GB (128M×8-byte) memory module, sixteen 512-Mb (128M×4-bit) memory devices can be used. The sixteen 512-Mb (128M×4-bit) memory devices are combined in eight pairs, with each pair serving as a virtual or pseudo-1-Gb (128M×8-bit) memory device. In certain such embodiments, the SPD device **240** contains the following SPD data (in appropriate bit fields of these bytes):

Byte **3**: 13 row address bits.

Byte **4**: 12 column address bits.

Byte **13**: 8 bits wide for the primary virtual 1-Gb (128M×8-bit) memory device.

Byte **14**: 8 bits wide for the error checking virtual 1-Gb (128M×8-bit) memory device.

Byte **17**: 4 banks.

In this exemplary embodiment, bytes **3**, **4**, and **17** are programmed to have the same values as they would have for a 512-MB (128M×4-byte) memory module utilizing 512-Mb (128M×4-bit) memory devices. However, bytes **13** and **14** of the SPD data are programmed to be equal to 8, corresponding to the bit width of the virtual or pseudo-higher-density 1-Gb (128M×8-bit) memory device, for a total capacity of 1-GB. Thus, the SPD data does not describe the actual-lower-density memory devices, but instead describes the virtual or pseudo-higher-density memory devices. The BIOS accesses the SPD data and recognizes the memory module as having 4 banks of memory locations arranged in 2^{13} rows and 2^{12} columns, with each memory location having a width of 8 bits rather than 4 bits.

In certain embodiments, when such a memory module **10** is inserted in a computer system, the computer system's memory controller then provides to the memory module **10** a set of input address and command signals which correspond to the number of ranks or the number of memory devices reported by the SPD device **240**. For example, placing a two-rank memory module **10** compatible with certain embodiments described herein in a computer system compatible with one-rank memory modules, the SPD device **240** reports to the computer system that the memory module **10** only has one rank. The circuit **40** then receives a set of input address and command signals corresponding to a single rank from the computer system's memory controller, and generates and transmits a set of output address and command signals corresponding to two ranks to the appropriate memory devices **30** of the memory module **10**.

Similarly, when a two-rank memory module **10** compatible with certain embodiments described herein is placed in a computer system compatible with either one- or two-rank memory modules, the SPD device **240** reports to the computer system that the memory module **10** only has one rank. The circuit **40** then receives a set of input address and command signals corresponding to a single rank from the computer system's memory controller, and generates and transmits a set of output address and command signals corresponding to two ranks to the appropriate memory devices **30** of the memory module **10**.

Furthermore, a four-rank memory module **10** compatible with certain embodiments described herein simulates a two-rank memory module whether the memory module **10** is inserted in a computer system compatible with two-rank memory modules or with two- or four-rank memory modules. Thus, by placing a four-rank memory module **10** compatible with certain embodiments described herein in a module slot

that is four-rank-ready, the computer system provides four chip-select signals, but the memory module **10** only uses two of the chip-select signals.

In certain embodiments, the circuit **40** comprises the SPD device **240** which reports the CAS latency (CL) to the memory controller of the computer system. The SPD device **240** of certain embodiments reports a CL which has one more cycle than does the actual operational CL of the memory array. In certain embodiments, data transfers between the memory controller and the memory module are registered for one additional clock cycle by the circuit **40**. The additional clock cycle of certain embodiments is added to the transfer time budget with an incremental overall CAS latency. This extra cycle of time in certain embodiments advantageously provides sufficient time budget to add a buffer which electrically isolates the ranks of memory devices **30** from the memory controller **20**. The buffer of certain embodiments comprises combinatorial logic, registers, and logic pipelines. In certain embodiments, the buffer adds a one-clock cycle time delay, which is equivalent to a registered DIMM, to accomplish the address decoding. The one-cycle time delay of certain such embodiments provides sufficient time for read and write data transfers to provide the functions of the data path multiplexer/demultiplexer. Thus, for example, a DDR2 400-MHz memory system in accordance with embodiments described herein has an overall CAS latency of four, and uses memory devices with a CAS latency of three. In still other embodiments, the SPD device **240** does not utilize this extra cycle of time.

Memory Density Multiplication

In certain embodiments, two memory devices having a memory density are used to simulate a single memory device having twice the memory density, and an additional address signal bit is used to access the additional memory. Similarly, in certain embodiments, two ranks of memory devices having a memory density are used to simulate a single rank of memory devices having twice the memory density, and an additional address signal bit is used to access the additional memory. As used herein, such simulations of memory devices or ranks of memory devices are termed as "memory density multiplication," and the term "density transition bit" is used to refer to the additional address signal bit which is used to access the additional memory by selecting which rank of memory devices is enabled for a read or write transfer operation.

For example, for computer systems which are normally limited to using memory modules which have a single rank of 128M×4-bit memory devices, certain embodiments described herein enable the computer system to utilize memory modules which have double the memory (e.g., two ranks of 128M×4-bit memory devices). The circuit **40** of certain such embodiments provides the logic (e.g., command and address decoding logic) to double the number of chip selects, and the SPD device **240** reports a memory device density of 256M×4-bit to the computer system.

In certain embodiments utilizing memory density multiplication embodiments, the memory module **10** can have various types of memory devices **30** (e.g., DDR1, DDR2, DDR3, and beyond). The circuit **40** of certain such embodiments utilizes implied translation logic equations having variations depending on whether the density transition bit is a row, column, or internal bank address bit. In addition, the translation logic equations of certain embodiments vary depending on the type of memory module **10** (e.g., UDIMM, RDIMM, FBDIMM, etc.). Furthermore, in certain embodiments, the translation logic equations vary depending on whether the implementation multiplies memory devices per rank or multiplies the number of ranks per memory module.

Table 3A provides the numbers of rows and columns for DDR-1 memory devices, as specified by JEDEC standard JESD79D, "Double Data Rate (DDR) SDRAM Specification," published February 2004, and incorporated in its entirety by reference herein.

TABLE 3A

	128-Mb	256-Mb	512-Mb	1-Gb
Number of banks	4	4	4	4
Number of row address bits	12	13	13	14
Number of column address bits for "× 4" configuration	11	11	12	12
Number of column address bits for "× 8" configuration	10	10	11	11
Number of column address bits for "× 16" configuration	9	9	10	10

As described by Table 3A, 512-Mb (128M×4-bit) DRAM devices have 2^{13} rows and 2^{12} columns of memory locations, while 1-Gb (128M×8-bit) DRAM devices have 2^{14} rows and 2^{11} columns of memory locations. Because of the differences in the number of rows and the number of columns for the two types of memory devices, complex address translation procedures and structures would typically be needed to fabricate a 1-GB (128M×8-byte) memory module using sixteen 512-Mb (128M×4-bit) DRAM devices.

Table 3B shows the device configurations as a function of memory density for DDR2 memory devices.

TABLE 3B

	Number of Rows	Number of Columns	Number of Internal Banks	Page Size (×4s or ×8s)
256 Mb	13	11	4	1 KB
512 Mb	14	11	4	1 KB
1 Gb	14	11	8	1 KB
2 Gb	15	11	8	1 KB
4 Gb	16	11	8	1 KB

Table 4 lists the corresponding density transition bit for the density transitions between the DDR2 memory densities of Table 3B.

TABLE 4

Density Transition	Density Transition Bit
256 Mb to 512 Mb	A_{13}
512 Mb to 1 Gb	BA_2
1 Gb to 2 Gb	A_{14}
2 Gb to 4 Gb	A_{15}

Other certain embodiments described herein utilize a transition bit to provide a transition from pairs of physical 4-Gb memory devices to simulated 8-Gb memory devices.

In an example embodiment, the memory module comprises one or more pairs of 256-Mb memory devices, with each pair simulating a single 512-Mb memory device. The simulated 512-Mb memory device has four internal banks while each of the two 256-Mb memory devices has four internal banks, for a total of eight internal banks for the pair of 256-Mb memory devices. In certain embodiments, the additional row address bit is translated by the circuit **40** to the rank selection between each of the two 256-Mb memory devices of the pair. Although there are eight total internal banks in the rank-converted memory array, the computer system is only

aware of four internal banks. When the memory controller activates a row for a selected bank, the circuit **40** activates the same row for the same bank, but it does so for the selected rank according to the logic state of the additional row address bit A_{13}.

In another example embodiment, the memory module comprises one or more pairs of 512-Mb memory devices, with each pair simulating a single 1-Gb memory device. The simulated 1-Gb memory device has eight internal banks while each of the two 512-Mb memory devices has four internal banks, for a total of eight internal banks for the pair of 512-Mb memory devices. In certain embodiments, the mapped BA_2 (bank 2) bit is used to select between the two ranks of 512-Mb memory devices to preserve the internal bank geometry expected by the memory controller of the computer system. The state of the BA_2 bit selects the upper or lower set of four banks, as well as the upper and lower 512-Mb rank.

In another example embodiment, the memory module comprises one or more pairs of 1-Gb memory devices, with each pair simulating a single 2-Gb memory device. Each of the two 1-Gb memory devices has eight internal banks for a total of sixteen internal banks, while the simulated 2-Gb memory device has eight internal banks. In certain embodiments, the additional row address bit translates to the rank selection between the two 1-Gb memory devices. Although there are sixteen total internal banks per pair of 1-Gb memory devices in the rank-converted memory array, the memory controller of the computer system is only aware of eight internal banks. When the memory controller activates a row of a selected bank, the circuit **40** activates the same row for the same bank, but is does so for the selected rank according to the logic state of the additional row address bit A_{14}.

The circuit **40** of certain embodiments provides substantially all of the translation logic used for the decoding (e.g., command and address decoding). In certain such embodiments, there is a fully transparent operational conversion from the "system memory" density domain of the computer system to the "physical memory" density domain of the memory module **10**. In certain embodiments, the logic translation equations are programmed in the circuit **40** by hardware, while in certain other embodiments, the logic translation equations are programmed in the circuit **40** by software. Examples 1 and 2 provide exemplary sections of Verilog code compatible with certain embodiments described herein. As described more fully below, the code of Examples 1 and 2 includes logic to reduce potential problems due to "back-to-back adjacent read commands which cross memory device boundaries or "BBARX." Persons skilled in the art are able to provide additional logic translation equations compatible with embodiments described herein.

An exemplary section of Verilog code compatible with memory density multiplication from 512 Mb to 1 Gb using DDR2 memory devices with the BA_2 density transition bit is listed below in Example 2. The exemplary code of Example 2 corresponds to a circuit **40** which receives one chip-select signal from the computer system and which generates two chip-select signals.

Example 2

```
always @(posedge clk_in)
   begin
            rs0N_R <= rs0_in_N;        // cs0
            rasN_R <= ras_in_N;
            casN_R <= cas_in_N;
            weN_R <= we_in_N;
   end
// Gated Chip Selects
assign          pcs0a_1 = (~rs0_in_N & ~ras_in_N & ~cas_in_N)                          // ref,md reg set
                | (~rs0_in_N & ras_in_N & cas_in_N)                                    // ref exit, pwr dn
                | (~rs0_in_N & ~ras_in_N & cas_in_N & ~we_in_N & a10_in)               // pchg all
                | (~rs0_in_N & ~ras_in_N & cas_in_N & ~we_in_N & ~a10_in & ~ba2_in)    // pchg single bnk
                | (~rs0_in_N & ~ras_in_N & cas_in_N & we_in_N        & ~ba2_in)        // activate
                | (~rs0_in_N & ras_in_N & ~cas_in_N                  & ~ba2_in)        // xfr
                ;
assign          pcs0b_1 = (~rs0_in_N & ~ras_in_N & ~cas_in_N)                          // ref,md reg set
                | (~rs0_in_N & ras_in_N & cas_in_N)                                    // ref exit, pwr dn
                | (~rs0_in_N & ~ras_in_N & cas_in_N & ~we_in_N & a10_in)               // pchg all
                | (~rs0_in_N & ~ras_in_N & cas_in_N & ~we_in_N & ~a10_in & ba2_in)     // pchg single bnk
                | (~rs0_in_N & ~ras_in_N & cas_in_N & we_in_N & ba2_in)                // activate
                | (~rs0_in_N & ras_in_N & ~cas_in_N& ba2_in)                           // xfr
                ;
//---------------------------------
   always @(posedge clk_in)
    begin
            a4_r <= a4_in ;
            a5_r <= a5_in ;
            a6_r <= a6_in ;
            a10_r <= a10_in ;
            ba0_r <= ba0_in ;
            ba1_r <= ba1_in ;
            ba2_r <= ba2_in ;
            q_mrs_cmd_cyc1 <= q_mrs_cmd ;
   end
//////////////////////////////////////////////////////////////////////////////
// determine the cas latency
//////////////////////////////////////////////////////////////////////////////
assign q_mrs_cmd_r = (!rasN_R & !casN_R & !weN_R)
            & !rs0N_R
            & ( !ba0_r & !ba1_r)
         ;          //md reg set cmd
always @(posedge clk_in)
```

-continued

```
if (~reset_N)       // lmr
        c13 <= l'b1 ;
   else if (q_mrs_cmd_cyc 1)       // load mode reg cmd
   begin
        c13 <= (~a6_r & a5_r & a4_r ) ;
   end
always @(posedge clk_in)
   if (~reset_N)       // reset
        c12 <= l'b0 ;
   else if (q_mrs_cmd_cyc1)       // load mode reg cmd
   begin
        c12 <= (~a6_r & a5_r & ~a4_r ) ;
   end
always @(posedge clk_in)
   if (~reset_N)       // reset
        c14 <= l'b0 ;
   else if (q_mrs_cmd_cyc1)       // load mode reg cmd
   begin
        c14 <= (a6_r & ~a5_r & ~a4_r ) ;
   end
always @(posedge clk_in)
   if (~reset_N)          c15 <= l'b0 ;
else if (q_mrs_cmd_cyc1)       // load mode reg cmd
   begin
        c15 <= (a6_r & ~a5_r & a4_r ) ;
   end
assign          pre_cyc2_enfet = (wr_cmd_cyc1 & acs_cyc1 & c13)                    // wr brst c13 preamble
                                ;
assign          pre_cyc3_enfet = (rd_cmd_cyc2 & c13)                               // rd brst c13 preamble
                               | (wr_cmd_cyc2 & c13)                               // wr brst c13 1st pair
                               | (wr_cmd_cyc2 & c14)                               // wr brst c14 preamble
                               ;
assign          pre_cyc4_enfet = (wr_cmd_cyc3 & c13)                               // wr brst c13 2nd pair
                               | (wr_cmd_cyc3 & c14)                               // wr brst c14 1st pair
                               | (rd_cmd_cyc3 & c13)                               // rd brst c13 1st pair
                               | (rd_cmd_cyc3 & c14)                               // rd brst c14 preamble
                               ;
assign          pre_cyc5_enfet = (rd_cmd_cyc4 & c13)                               // rd brst cl3 2nd pair
                               | (wr_cmd_cyc4 & c14)                               // wr brst c14 2nd pair
                               | (rd_cmd_cyc4 & c14)                               // rd brst c14 1st pair
                               ;
// dq
assign          pre_dq_cyc = pre_cyc2_enfet
                 | pre_cyc3_enfet
                 | pre_cyc4_enfet
                 | pre_cyc5_enfet
                      ;
assign          pre_dq_ncyc = enfet_cyc2
                 | enfet_cyc3
                 | enfet_cyc4
                 | enfet_cyc5
                 ;
// dqs
assign          pre_dqsa_cyc = (pre_cyc2_enfet & ~ba2_r)
                    | (pre_cyc3_enfet & ~ba2_cyc2)
                    | (pre_cyc4_enfet & ~ba2_cyc3)
                    | (pre_cyc5_enfet & ~ba2_cyc4)
                    ;
assign          pre_dqsb_cyc = (pre_cyc2_enfet & ba2_r)
                    | (pre_cyc3_enfet & ba2_cyc2)
                    | (pre_cyc4_enfet & ba2_cyc3)
                    | (pre_cyc5_enfet & ba2_cyc4)
                    ;
assign          pre_dqsa_ncyc = (enfet_cyc2 & ~ba2_cyc2)
                    | (enfet_cyc3 & ~ba2_cyc3)
                    | (enfet_cyc4 & ~ba2_cyc4)
                    | (enfet_cyc5 & ~ba2_cyc5)
                    ;
assign          pre_dqsb_ncyc = (enfet_cyc2 & ba2_cyc2)
                    | (enfet_cyc3 & ba2_cyc3)
                    | (enfet_cyc4 & ba2_cyc4)
                    | (enfet_cyc5 & ba2_cyc5)
                    ;
always @(posedge clk_in)
   begin
          acs_cyc2 <= acs_cyc1 ;          // cs active
          ba2_cyc2 <= ba2_r ;
          ba2_cyc3 <= ba2_cyc2 ;
          ba2_cyc4 <= ba2_cyc3 ;
          ba2_cyc5 <= ba2_cyc4 ;
```

-continued

```
            rd_cmd_cyc2 <= rd_cmd_cyc1 & acs_cyc1 ;
            rd_cmd_cyc3 <= rd_cmd_cyc2 ;
            rd_cmd_cyc4 <= rd_cmd_cyc3 ;
            rd_cmd_cyc5 <= rd_cmd_cyc4 ;
            rd_cmd_cyc6 <= rd_cmd_cyc5 ;
            rd_cmd_cyc7 <= rd_cmd_cyc6 ;
            wr_cmd_cyc2 <= wr_cmd_cycl & acs_cyc1;
            wr_cmd_cyc3 <= wr_cmd_cyc2 ;
            wr_cmd_cyc4 <= wr_cmd_cyc3 ;
            wr_cmd_cyc5 <= wr_cmd_cyc4 ;
   end
always @(negedge clk_in)
   begin
            dq_ncyc <= dq_cyc;
            dqs_ncyc_a <= dqs_cyc_a;
            dqs_ncyc_b <= dqs_cyc_b;
   end
// DQ FET enables
assign          enq_fet1 = dq_cyc | dq_ncyc              ;
assign          enq_fet2 = dq_cyc | dq_ncyc ;
assign          enq_fet3 = dq_cyc | dq_ncyc              ;
assign          enq_fet4 = dq_cyc | dq_ncyc ;
assign          enq_fet5 = dq_cyc | dq_ncyc ;
// DQS FET enables
assign          ens_fet1a = dqs_cyc_a | dqs_ncyc_a   ;
assign          ens_fet2a = dqs_cyc_a | dqs_ncyc_a   ;
assign          ens_fet3a = dqs_cyc_a | dqs_ncyc_a   ;
assign          ens_fet1b = dqs_cyc_b | dqs_ncyc_b   ;
assign          ens_fet2b = dqs_cyc_b | dqs_ncyc_b   ;
assign          ens_fet3b = dqs_cyc_b | dqs_ncyc_b   ;
```

Another exemplary section of Verilog code compatible with memory density multiplication from 256 Mb to 512 Mb using DDR2 memory devices and gated CAS signals with the row A_{13} density transition bit is listed below in Example 3. The exemplary code of Example 3 corresponds to a circuit **40** which receives one gated CAS signal from the computer system and which generates two gated CAS signals.

Example 3

```
// latched a13 flags cs0, banks 0-3
   always @(posedge clk_in)
      if (actv_cmd_R & ~rs0N_R & ~bnk1_R & ~bnk0_R)  // activate
      begin
            1_a13_00 <= a13r ;
      end
   always @(posedge clk_in)
if (actv_cmd_R & ~rs0N_R & ~bnk1_R & bnk0_R)          // activate
      begin
            1_a13_01 <= a13_r ;
      end
   always @(posedge clk_in)
      if (actv_cmd_R & ~rs0N_R & bnkl_R & ~bnk0_R)    // activate
      begin
            1_a13_10 <=a13_r ;
      end
   always @(posedge clk_in)
if (actv_cmdR & ~rs0N_R & bnkl_R & bnk0_R)            // activate
      begin
            1_a13_11 <= a13_r ;
      end
// gated cas
assign cas_i = ~(casN_R);
assign cas0_o = ( ~rasN_R & cas_i)
            | ( rasN_R & ~l_a13_00 & ~bnk1_R & ~bnk0_R & cas_i)
            | ( rasN_R & ~l_a13_01 & ~bnk1_R & bnk0_R & cas_i)
            | ( rasN_R & ~l_a13_10 & bnk1_R & ~bnk0_R & cas_i)
            | ( rasN_R & ~l_a13_11 & bnk1_R & bnk0_R & cas_i)
            ;
assign cas1_o = (~rasN_R & cas_i)
            | ( rasN_R & l_a13_00          & ~bnk1_R & ~bnk0_R & cas_i)
            | ( rasN_R & l_a13_01          & ~bnk1_R & bnk0_R & cas_i)
            | ( rasN_R & l_a13_10          & bnk1_R & ~bnk0_R & cas_i)
            | ( rasN_R & l_a13_11          & bnk1_R & bnk0_R & cas_i)
```

-continued

```
assign      pcas_0_N = ~cas0_o;
assign      pcas_1_N = ~cas1_o;
assign      rd0_o_R1 = rasN_R & cas0_o & weN_R & ~ra0N_R;      // rnk0 rd cmd cyc
assign      rd1_o_R1 = rasN_R & cas1_o & weN_R & ~rs0N_R;      // rnk1 rd cmd cyc
assign      wr0_o_R1 = rasN_R & cas0_o & ~weN_R & ~rs0N_R;    // rnk0 wr cmd cyc
assign      wr1_o_R1 = rasN_R & cas1_o & ~weN_R & ~rs0N_R ;   // rnk1 wr cmd cyc
    always @(posedge clk_in)
    begin
            rd0_o_R2 <=rd0_o_R1 ;
            rd0_o_R3 <=rd0_o_R2;
            rd0_o_R4 <=rd0_o_R3;
            rd0_o_R5 <=rd0_o_R4;
            rd1_o_R2 <=rd1_o_R1 ;
            rd1_o_R3 <=rd1_o_R2;
            rd1_o_R4 <=rd1_o_R3;
            rd1_o_R5 <=rd1_o_R4;
            wr0_o_R2 <=wr0_o_R1 ;
            wr0_o_R3 <=wr0_o_R2;
            wr0_o_R4 <=wr0_o_R3;
            wr1_o_R2 <=wr1_o_R1 ;
            wr1_o_R3 <=wr1_o_R2;
            wr1_o_R4 <=wr1_o_R3;
    end
  always @(posedge clk_in)
    begin
    if (
      (rd0_o_R2 & ~rd1_o_R4)                          // pre-am rd if no ped on rnk 1
      | rd0_o_R3                                      // 1st cyc of rd brst
      | rd0_o_R4                                      // 2nd cyc of rd brst
      | (rd0_o_R5 & ~rd1_o_R2 & ~rd1_o_R3 )           // post-rd cyc if no ped on rnk 1
      | (wr0_o_R1)                                    // pre-am wr
      | wr0_o_R2 | wr0_o_R3                           // wr brst 1st & 2nd cyc
      | (wr0_o_R4)                                    // post-wr cyc (chgef9)
      | wr1_o_R1 | wr1_o_R2 | wr1_o_R3 | wr1_o_R4 // rank 1 (chgef9)
      )
         en_fet_a <=l'b1;                             // enable fet
    else
         en_fet_a <=1'b0;                             // disable fet
    end
  always @(posedge clk_in)
      begin
      if (
           (rd1_o_R2 & ~rd0_o_R4)
         | rd1_o_R3
         | rd1_o_R4
         | (rd1_o_R5 & ~rd0_o_R2 & ~rd0_o_R3)
      | (wr1_o_R1)                                    // (chgef8)
      | wr1_o_R2 | wr1_o_R3
    | (wr1_o_R4)                                      // post-wr cyc (chgef9)
    | wr0_o_R1 | wr0_o_R2 | wr0_o_R3 | wr0_o_R4       // rank 0 (chgef9)
      )
           en_fet_b <=l'bl;                           //
      else
           en_fet_b <=l'b0;
      end
```

In certain embodiments, the chipset memory controller of the computer system uses the inherent behavioral characteristics of the memory devices (e.g., DDR2 memory devices) to optimize throughput of the memory system. For example, for each internal bank in the memory array, a row (e.g., 1 KB page) is advantageously held activated for an extended period of time. The memory controller, by anticipating a high number of memory accesses or hits to a particular region of memory, can exercise this feature to advantageously eliminate time-consuming pre-charge cycles. In certain such embodiments in which two half-density memory devices are transparently substituted for a single full-density memory device (as reported by the SPD device **240** to the memory controller), the memory devices advantageously support the "open row" feature.

FIG. **10**A schematically illustrates an exemplary memory module **10** which doubles the rank density in accordance with certain embodiments described herein. The memory module **10** has a first memory capacity. The memory module **10** comprises a plurality of substantially identical memory devices **30** configured as a first rank **32***a* and a second rank **32***b*. In certain embodiments, the memory devices **30** of the first rank **32***a* are configured in pairs, and the memory devices **30** of the second rank **32***b* are also configured in pairs. In certain embodiments, the memory devices **30** of the first rank **32***a* are configured with their respective DQS pins tied together and the memory devices **30** of the second rank **32***b* are configured with their respective DQS pins tied together, as described more fully below. The memory module **10** further comprises a circuit **40** which receives a first set of address and command signals from a memory controller (not shown) of the computer system. The first set of address and command signals is compatible with a second memory capacity substantially equal to one-half of the first memory capacity. The circuit **40** translates the first set of address and command signals into a second set of address and command signals

which is compatible with the first memory capacity of the memory module **10** and which is transmitted to the first rank **32***a* and the second rank **32***b*.

The first rank **32***a* of FIG. **10**A has 18 memory devices **30** and the second rank **32***b* of FIG. **10**A has 18 memory devices **30**. Other numbers of memory devices **30** in each of the ranks **32***a*, **32***b* are also compatible with embodiments described herein.

In the embodiment schematically illustrated by FIG. **10**A, the memory module **10** has a width of 8 bytes (or 64 bits) and each of the memory devices **30** of FIG. **10**A has a bit width of 4 bits. The 4-bit-wide ("×4") memory devices **30** of FIG. **10**A have one-half the width, but twice the depth of 8-bit-wide ("×8") memory devices. Thus, each pair of "×4" memory devices **30** has the same density as a single "×8" memory device, and pairs of "×4" memory devices **30** can be used instead of individual "×8" memory devices to provide the memory density of the memory module **10**. For example, a pair of 512-Mb 128M×4-bit memory devices has the same memory density as a 1-Gb 128M×8-bit memory device.

For two "×4" memory devices **30** to work in tandem to mimic a "×8" memory device, the relative DQS pins of the two memory devices **30** in certain embodiments are advantageously tied together, as described more fully below. In addition, to access the memory density of a high-density memory module **10** comprising pairs of "×4" memory devices **30**, an additional address line is used. While a high-density memory module comprising individual "×8" memory devices with the next-higher density would also utilize an additional address line, the additional address lines are different in the two memory module configurations.

For example, a 1-Gb 128M×8-bit DDR-1 DRAM memory device uses row addresses A_{13}-A_0 and column addresses A_{11} and A_9-A_0. A pair of 512-Mb 128M×4-bit DDR-1 DRAM memory devices uses row addresses A_{12}-A_0 and column addresses A_{12}, A_{11}, and A_9-A_0. In certain embodiments, a memory controller of a computer system utilizing a 1-GB 128M×8 memory module **10** comprising pairs of the 512-Mb 128M×4 memory devices **30** supplies the address and command signals including the extra row address (A_{13}) to the memory module **10**. The circuit **40** receives the address and command signals from the memory controller and converts the extra row address (A_{13}) into an extra column address (A_{12}).

FIG. **10**B schematically illustrates an exemplary circuit **40** compatible with embodiments described herein. The circuit **40** is used for a memory module **10** comprising pairs of "×4" memory devices **30** which mimic individual "×8" memory devices. In certain embodiments, each pair has the respective DQS pins of the memory devices **30** tied together. In certain embodiments, as schematically illustrated by FIG. **10**B, the circuit **40** comprises a programmable-logic device (PLD) **42**, a first multiplexer **44** electrically coupled to the first rank **32***a* of memory devices **30**, and a second multiplexer **46** electrically coupled to the second rank **32***b* of memory devices **30**. In certain embodiments, the PLD **42** and the first and second multiplexers **44**, **46** are discrete elements, while in other certain embodiments, they are integrated within a single integrated circuit. Persons skilled in the art can select an appropriate PLD **42**, first multiplexer **44**, and second multiplexer **46** in accordance with embodiments described herein.

In the exemplary circuit **40** of FIG. **10**B, during a row access procedure (CAS is high), the first multiplexer **44** passes the A_{12} address through to the first rank **32**, the second multiplexer **46** passes the A_{12} address through to the second rank **34**, and the PLD **42** saves or latches the A_{13} address from the memory controller. In certain embodiments, a copy of the A_{13} address is saved by the PLD **42** for each of the internal banks (e.g., 4 internal banks) per memory device **30**. During a subsequent column access procedure (CAS is low), the first multiplexer **44** passes the previously-saved A_{13} address through to the first rank **32***a* as the A_{12} address and the second multiplexer **46** passes the previously-saved A_{13} address through to the second rank **32***b* as the A_{12} address. The first rank **32***a* and the second rank **32***b* thus interpret the previously-saved A_{13} row address as the current A_{12} column address. In this way, in certain embodiments, the circuit **40** translates the extra row address into an extra column address in accordance with certain embodiments described herein.

Thus, by allowing two lower-density memory devices to be used rather than one higher-density memory device, certain embodiments described herein provide the advantage of using lower-cost, lower-density memory devices to build "next-generation" higher-density memory modules. Certain embodiments advantageously allow the use of lower-cost readily-available 512-Mb DDR-2 SDRAM devices to replace more expensive 1-Gb DDR-2 SDRAM devices. Certain embodiments advantageously reduce the total cost of the resultant memory module.

FIG. **11**A schematically illustrates an exemplary memory module **10** which doubles number of ranks in accordance with certain embodiments described herein. The memory module **10** has a first plurality of memory locations with a first memory density. The memory module **10** comprises a plurality of substantially identical memory devices **30** configured as a first rank **32***a*, a second rank **32***b*, a third rank **32***c*, and a fourth rank **32***d*. The memory module **10** further comprises a circuit **40** which receives a first set of address and command signals from a memory controller (not shown). The first set of address and command signals is compatible with a second plurality of memory locations having a second memory density. The second memory density is substantially equal to one-half of the first memory density. The circuit **40** translates the first set of address and command signals into a second set of address and command signals which is compatible with the first plurality of memory locations of the memory module **10** and which is transmitted to the first rank **32***a*, the second rank **32***b*, the third rank **32***c*, and the fourth rank **32***d*.

Each rank **32***a*, **32***b*, **32***c*, **32***d* of FIG. **11**A has 9 memory devices **30**. Other numbers of memory devices **30** in each of the ranks **32***a*, **32***b*, **32***c*, **32***d* are also compatible with embodiments described herein.

In the embodiment schematically illustrated by FIG. **11**A, the memory module **10** has a width of 8 bytes (or 64 bits) and each of the memory devices **30** of FIG. **11**A has a bit width of 8 bits. Because the memory module **10** has twice the number of 8-bit-wide ("×8") memory devices **30** as does a standard 8-byte-wide memory module, the memory module **10** has twice the density as does a standard 8-byte-wide memory module. For example, a 1-GB 128M×8-byte memory module with 36 512-Mb 128M×8-bit memory devices (arranged in four ranks) has twice the memory density as a 512-Mb 128M×8-byte memory module with 18 512-Mb 128M×8-bit memory devices (arranged in two ranks).

To access the additional memory density of the high-density memory module **10**, the two chip-select signals (CS_0, CS_1) are used with other address and command signals to gate a set of four gated CAS signals. For example, to access the additional ranks of four-rank 1-GB 128M×8-byte DDR-1 DRAM memory module, the CS_0 and CS_1 signals along with the other address and command signals are used to gate the CAS signal appropriately, as schematically illustrated by FIG. **11**A. FIG. **11**B schematically illustrates an exemplary circuit **40** compatible with embodiments described herein. In

certain embodiments, the circuit **40** comprises a programmable-logic device (PLD) **42** and four "OR" logic elements **52**, **54**, **56**, **58** electrically coupled to corresponding ranks **32***a*, **32***b*, **32***c*, **32***d* of memory devices **30**.

In certain embodiments, the PLD **42** comprises an ASIC, an FPGA, a custom-designed semiconductor device, or a CPLD. In certain embodiments, the PLD **42** and the four "OR" logic elements **52**, **54**, **56**, **58** are discrete elements, while in other certain embodiments, they are integrated within a single integrated circuit. Persons skilled in the art can select an appropriate PLD **42** and appropriate "OR" logic elements **52**, **54**, **56**, **58** in accordance with embodiments described herein.

In the embodiment schematically illustrated by FIG. **11**B, the PLD **42** transmits each of the four "enabled CAS" ($ENCAS_0a$, $ENCAS_0b$, $ENCAS_1a$, $ENCAS_1b$) signals to a corresponding one of the "OR" logic elements **52**, **54**, **56**, **58**. The CAS signal is also transmitted to each of the four "OR" logic elements **52**, **54**, **56**, **58**. The CAS signal and the "enabled CAS" signals are "low" true signals. By selectively activating each of the four "enabled CAS" signals which are inputted into the four "OR" logic elements **52**, **54**, **56**, **58**, the PLD **42** is able to select which of the four ranks **32***a*, **32***b*, **32***c*, **32***d* is active.

In certain embodiments, the PLD **42** uses sequential and combinatorial logic procedures to produce the gated CAS signals which are each transmitted to a corresponding one of the four ranks **32***a*, **32***b*, **32***c*, **32***d*. In certain other embodiments, the PLD **42** instead uses sequential and combinatorial logic procedures to produce four gated chip-select signals (e.g., CS_0a, CS_1b, CS_1a, and CS_1b) which are each transmitted to a corresponding one of the four ranks **32***a*, **32***b*, **32***c*, **32***d*.

Tied Data Strobe Signal Pins

For proper operation, the computer system advantageously recognizes a 1-GB memory module comprising 256-Mb memory devices with 64M×4-bit configuration as a 1-GB memory module having 512-Mb memory devices with 64M×8-bit configuration (e.g., as a 1-GB memory module with 128M×8-byte configuration). This advantageous result is desirably achieved in certain embodiments by electrically connecting together two output signal pins (e.g., DQS or data strobe pins) of the two 256-Mb memory devices such that both output signal pins are concurrently active when the two memory devices are concurrently enabled. The DQS or data strobe is a bi-directional signal that is used during both read cycles and write cycles to validate or latch data. As used herein, the terms "tying together" or "tied together" refer to a configuration in which corresponding pins (e.g., DQS pins) of two memory devices are electrically connected together and are concurrently active when the two memory devices are concurrently enabled (e.g., by a common chip-select or CS signal). Such a configuration is different from standard memory module configurations in which the output signal pins (e.g., DQS pins) of two memory devices are electrically coupled to the same source, but these pins are not concurrently active since the memory devices are not concurrently enabled. However, a general guideline of memory module design warns against tying together two output signal pins in this way.

FIGS. **12** and **13** schematically illustrate a problem which may arise from tying together two output signal pins. FIG. **12** schematically illustrates an exemplary memory module **305** in which a first DQS pin **312** of a first memory device **310** is electrically connected to a second DQS pin **322** of a second memory device **320**. The two DQS pins **312**, **322** are both electrically connected to a memory controller **330**.

FIG. **13** is an exemplary timing diagram of the voltages applied to the two DQS pins **312**, **322** due to non-simultaneous switching. As illustrated by FIG. **13**, at time t_1, both the first DQS pin **312** and the second DQS pin **322** are high, so no current flows between them. Similarly, at time t_4, both the first DQS pin **312** and the second DQS pin **322** are low, so no current flows between them. However, for times between approximately t_2 and approximately t_3, the first DQS pin **312** is low while the second DQS pin **322** is high. Under such conditions, a current will flow between the two DQS pins **312**, **322**. This condition in which one DQS pin is low while the other DQS pin is high can occur for fractions of a second (e.g., 0.8 nanoseconds) during the dynamic random-access memory (DRAM) read cycle. During such conditions, the current flowing between the two DQS pins **312**, **322** can be substantial, resulting in heating of the memory devices **310**, **320**, and contributing to the degradation of reliability and eventual failure of these memory devices.

A second problem may also arise from tying together two output signal pins. FIG. **14** schematically illustrates another exemplary memory module **305** in which a first DQS pin **312** of a first memory device **310** is electrically connected to a second DQS pin **322** of a second memory device **320**. The two DQS pins **312**, **322** of FIG. **14** are both electrically connected to a memory controller (not shown). The DQ (data input/output) pin **314** of the first memory device **310** and the corresponding DQ pin **324** of the second memory device **320** are each electrically connected to the memory controller by the DQ bus (not shown). Typically, each memory device **310**, **320** will have a plurality of DQ pins (e.g., eight DQ pins per memory device), but for simplicity, FIG. **14** only shows one DQ pin for each memory device **310**, **320**.

Each of the memory devices **310**, **320** of FIG. **14** utilizes a respective on-die termination or "ODT" circuit **332**, **334** which has termination resistors (e.g., 75 ohms) internal to the memory devices **310**, **320** to provide signal termination. Each memory device **310**, **320** has a corresponding ODT signal pin **362**, **364** which is electrically connected to the memory controller via an ODT bus **340**. The ODT signal pin **362** of the first memory device **310** receives a signal from the ODT bus **340** and provides the signal to the ODT circuit **332** of the first memory device **310**. The ODT circuit **332** responds to the signal by selectively enabling or disabling the internal termination resistors **352**, **356** of the first memory device **310**. This behavior is shown schematically in FIG. **14** by the switches **342**, **344** which are either closed (dash-dot line) or opened (solid line). The ODT signal pin **364** of the second memory device **320** receives a signal from the ODT bus **340** and provides the signal to the ODT circuit **334** of the second memory device **320**. The ODT circuit **334** responds to the signal by selectively enabling or disabling the internal termination resistors **354**, **358** of the second memory device **320**. This behavior is shown schematically in FIG. **14** by the switches **346**, **348** which are either closed (dash-dot line) or opened (solid line). The switches **342**, **344**, **346**, **348** of FIG. **14** are schematic representations of the operation of the ODT circuits **332**, **334**, and do not signify that the ODT circuits **332**, **334** necessarily include mechanical switches.

Examples of memory devices **310**, **320** which include such ODT circuits **332**, **334** include, but are not limited to, DDR2 memory devices. Such memory devices are configured to selectively enable or disable the termination of the memory device in this way in response to signals applied to the ODT signal pin of the memory device. For example, when the ODT signal pin **362** of the first memory device **310** is pulled high, the termination resistors **352**, **356** of the first memory device **310** are enabled. When the ODT signal pin **362** of the first

memory device **310** is pulled low (e.g., grounded), the termination resistors **352**, **356** of the first memory device **310** are disabled. By selectively disabling the termination resistors of an active memory device, while leaving the termination resistors of inactive memory devices enabled, such configurations advantageously preserve signal strength on the active memory device while continuing to eliminate signal reflections at the bus-die interface of the inactive memory devices.

In certain configurations, as schematically illustrated by FIG. **14**, the DQS pins **312**, **322** of each memory device **310**, **320** are selectively connected to a voltage VTT through a corresponding termination resistor **352**, **354** internal to the corresponding memory device **310**, **320**. Similarly, in certain configurations, as schematically illustrated by FIG. **14**, the DQ pins **314**, **324** are selectively connected to a voltage VTT through a corresponding termination resistor **356**, **358** internal to the corresponding memory device **310**, **320**. In certain configurations, rather than being connected to a voltage VTT, the DQ pins **314**, **324** and/or the DQS pins **312**, **322** are selectively connected to ground through the corresponding termination resistors **352**, **354**, **356**, **358**. The resistances of the internal termination resistors **352**, **354**, **356**, **358** are selected to clamp the voltages so as to reduce the signal reflections from the corresponding pins. In the configuration schematically illustrated by FIG. **14**, each internal termination resistor **352**, **354**, **356**, **358** has a resistance of approximately 75 ohms.

When connecting the first memory device **310** and the second memory device **320** together to form a double word width, both the first memory device **310** and the second memory device **320** are enabled at the same time (e.g., by a common CS signal). Connecting the first memory device **310** and the second memory device **320** by tying the DQS pins **312**, **322** together, as shown in FIG. **14**, results in a reduced effective termination resistance for the DQS pins **312**, **322**. For example, for the exemplary configuration of FIG. **14**, the effective termination resistance for the DQS pins **312**, **322** is approximately 37.5 ohms, which is one-half the desired ODT resistance (for 75-ohm internal termination resistors) to reduce signal reflections since the internal termination resistors **352**, **354** of the two memory devices **310**, **320** are connected in parallel. This reduction in the termination resistance can result in signal reflections causing the memory device to malfunction.

FIG. **15** schematically illustrates an exemplary memory module **400** in accordance with certain embodiments described herein. The memory module **400** comprises a first memory device **410** having a first data strobe (DQS) pin **412** and a second memory device **420** having a second data strobe (DQS) pin **422**. The memory module **400** further comprises a first resistor **430** electrically coupled to the first DQS pin **412**. The memory module **400** further comprises a second resistor **440** electrically coupled to the second DQS pin **422** and to the first resistor **430**. The first DQS pin **412** is electrically coupled to the second DQS pin **422** through the first resistor **430** and through the second resistor **440**.

In certain embodiments, the memory module **400** is a 1-GB unbuffered Double Data Rate (DDR) Synchronous Dynamic RAM (SDRAM) high-density dual in-line memory module (DIMM). FIGS. **16**A and **16**B schematically illustrate a first side **462** and a second side **464**, respectively, of such a memory module **400** with eighteen 64M×4-bit, DDR-1 SDRAM FBGA memory devices on each side of a 184-pin glass-epoxy printed circuit board (PCB) **460**. In certain embodiments, the memory module **400** further comprises a phase-lock-loop (PLL) clock driver **470**, an EEPROM for serial-presence detect (SPD) data **480**, and decoupling capacitors (not shown) mounted on the PCB in parallel to suppress switching noise on VDD and VDDQ power supply for DDR-1 SDRAM. By using synchronous design, such memory modules **400** allow precise control of data transfer between the memory module **400** and the system controller. Data transfer can take place on both edges of the DQS signal at various operating frequencies and programming latencies. Therefore, certain such memory modules **400** are suitable for a variety of high-performance system applications.

In certain embodiments, the memory module **400** comprises a plurality of memory devices configured in pairs, each pair having a first memory device **410** and a second memory device **420**. For example, in certain embodiments, a 128M×72-bit DDR SDRAM high-density memory module **400** comprises thirty-six 64M×4-bit DDR-1 SDRAM integrated circuits in FBGA packages configured in eighteen pairs. The first memory device **410** of each pair has the first DQS pin **412** electrically coupled to the second DQS pin **422** of the second memory device **420** of the pair. In addition, the first DQS pin **412** and the second DQS pin **422** are concurrently active when the first memory device **410** and the second memory device **420** are concurrently enabled.

In certain embodiments, the first resistor **430** and the second resistor **440** each has a resistance advantageously selected to reduce the current flow between the first DQS pin **412** and the second DQS pin **422** while allowing signals to propagate between the memory controller and the DQS pins **412**, **422**. In certain embodiments, each of the first resistor **430** and the second resistor **440** has a resistance in a range between approximately 5 ohms and approximately 50 ohms. For example, in certain embodiments, each of the first resistor **430** and the second resistor **440** has a resistance of approximately 22 ohms. Other resistance values for the first resistor **430** and the second resistor **440** are also compatible with embodiments described herein. In certain embodiments, the first resistor **430** comprises a single resistor, while in other embodiments, the first resistor **430** comprises a plurality of resistors electrically coupled together in series and/or in parallel. Similarly, in certain embodiments, the second resistor **440** comprises a single resistor, while in other embodiments, the second resistor **440** comprises a plurality of resistors electrically coupled together in series and/or in parallel.

FIGS. **17**A and **17**B schematically illustrate an exemplary embodiment of a memory module **400** in which the first resistor **430** and the second resistor **440** are used to reduce the current flow between the first DQS pin **412** and the second DQS pin **422**. As schematically illustrated by FIG. **17**A, the memory module **400** is part of a computer system **500** having a memory controller **510**. The first resistor **430** has a resistance of approximately 22 ohms and the second resistor **440** has a resistance of approximately 22 ohms. The first resistor **430** and the second resistor **440** are electrically coupled in parallel to the memory controller **510** through a signal line **520** having a resistance of approximately 25 ohms. The first resistor **430** and the second resistor **440** are also electrically coupled in parallel to a source of a fixed termination voltage (identified by VTT in FIGS. **17**A and **17**B) by a signal line **540** having a resistance of approximately 47 ohms. Such an embodiment can advantageously be used to allow two memory devices having lower bit widths (e.g., 4-bit) to behave as a single virtual memory device having a higher bit width (e.g., 8-bit).

FIG. **17**B schematically illustrates exemplary current-limiting resistors **430**, **440** in conjunction with the impedances of the memory devices **410**, **420**. During an exemplary portion of a data read operation, the memory controller **510** is in a high-impedance condition, the first memory device **410**

drives the first DQS pin **412** high (e.g., 2.7 volts), and the second memory device **420** drives the second DQS pin **422** low (e.g., 0 volts). The amount of time for which this condition occurs is approximated by the time between t_2 and t_3 of FIG. **13**, which in certain embodiments is approximately twice the tDQSQ (data strobe edge to output data edge skew time, e.g., approximately 0.8 nanoseconds). At least a portion of this time in certain embodiments is caused by simultaneous switching output (SSO) effects.

In certain embodiments, as schematically illustrated by FIG. **17**B, the DQS driver of the first memory device **410** has a driver impedance R_1 of approximately 17 ohms, and the DQS driver of the second memory device **420** has a driver impedance R_4 of approximately 17 ohms. Because the upper network of the first memory device **410** and the first resistor **430** (with a resistance R_2 of approximately 22 ohms) is approximately equal to the lower network of the second memory device **420** and the second resistor **440** (with a resistance R_3 of approximately 22 ohms), the voltage at the midpoint is approximately 0.5*(2.7−0)=1.35 volts, which equals VTT, such that the current flow across the 47-ohm resistor of FIG. **17**B is approximately zero.

The voltage at the second DQS pin **422** in FIG. **17**B is given by $V_{DQS2}=2.7*R_4/(R_1+R_2+R_3+R_4)=0.59$ volts and the current flowing through the second DQS pin **422** is given by $I_{DQS2}=0.59/R_4=34$ milliamps. The power dissipation in the DQS driver of the second memory device **420** is thus $P_{DQS2}=34$ mA*0.59 V=20 milliwatts. In contrast, without the first resistor **430** and the second resistor **440**, only the 17-ohm impedances of the two memory devices **410**, **420** would limit the current flow between the two DQS pins **412**, **422**, and the power dissipation in the DQS driver of the second memory device **420** would be approximately 107 milliwatts. Therefore, the first resistor **430** and the second resistor **440** of FIGS. **17**A and **17**B advantageously limit the current flowing between the two memory devices during the time that the DQS pin of one memory device is driven high and the DQS pin of the other memory device is driven low.

In certain embodiments in which there is overshoot or undershoot of the voltages, the amount of current flow can be higher than those expected for nominal voltage values. Therefore, in certain embodiments, the resistances of the first resistor **430** and the second resistor **440** are advantageously selected to account for such overshoot/undershoot of voltages.

For certain such embodiments in which the voltage at the second DQS pin **422** is $V_{DQS2}=0.59$ volts and the duration of the overdrive condition is approximately 0.8 nanoseconds at maximum, the total surge is approximately 0.59 V*1.2 ns=0.3 V-ns. For comparison, the JEDEC standard for overshoot/undershoot is 2.4 V-ns, so certain embodiments described herein advantageously keep the total surge within predetermined standards (e.g., JEDEC standards).

FIG. **18** schematically illustrates another exemplary memory module **600** compatible with certain embodiments described herein. The memory module **600** comprises a termination bus **605**. The memory module **600** further comprises a first memory device **610** having a first data strobe pin **612**, a first termination signal pin **614** electrically coupled to the termination bus **605**, a first termination circuit **616**, and at least one data pin **618**. The first termination circuit **616** selectively electrically terminating the first data strobe pin **612** and the first data pin **618** in response to a first signal received by the first termination signal pin **614** from the termination bus **605**. The memory module **600** further comprises a second memory device **620** having a second data strobe pin **622** electrically coupled to the first data strobe pin **612**, a second termination signal pin **624**, a second termination circuit **626**, and at least one data pin **628**. The second termination signal pin **624** is electrically coupled to a voltage, wherein the second termination circuit **626** is responsive to the voltage by not terminating the second data strobe pin **622** or the second data pin **628**. The memory module **600** further comprises at least one termination assembly **630** having a third termination signal pin **634**, a third termination circuit **636**, and at least one termination pin **638** electrically coupled to the data pin **628** of the second memory device **620**. The third termination signal pin **634** is electrically coupled to the termination bus **605**. The third termination circuit **636** selectively electrically terminates the data pin **628** of the second memory device **620** through the termination pin **638** in response to a second signal received by the third termination signal pin **634** from the termination bus **605**.

FIG. **19** schematically illustrates a particular embodiment of the memory module **600** schematically illustrated by FIG. **18**. The memory module **600** comprises an on-die termination (ODT) bus **605**. The memory module **600** comprises a first memory device **610** having a first data strobe (DQS) pin **612**, a first ODT signal pin **614** electrically coupled to the ODT bus **605**, a first ODT circuit **616**, and at least one data (DQ) pin **618**. The first ODT circuit **616** selectively electrically terminates the first DQS pin **612** and the DQ pin **618** of the first memory device **610** in response to an ODT signal received by the first ODT signal pin **614** from the ODT bus **605**. This behavior of the first ODT circuit **616** is schematically illustrated in FIG. **14** by the switches **672**, **676** which are selectively closed (dash-dot line) or opened (solid line).

The memory module **600** further comprises a second memory device **620** having a second DQS pin **622** electrically coupled to the first DQS pin **612**, a second ODT signal pin **624**, a second ODT circuit **626**, and at least one DQ pin **628**. The first DQS pin **612** and the second DQS pin **622** are concurrently active when the first memory device **610** and the second memory device **620** are concurrently enabled. The second ODT signal pin **624** is electrically coupled to a voltage (e.g., ground), wherein the second ODT circuit **626** is responsive to the voltage by not terminating the second DQS pin **622** or the second DQ pin **624**. This behavior of the second ODT circuit **626** is schematically illustrated in FIG. **14** by the switches **674**, **678** which are opened.

The memory module **600** further comprises at least one termination assembly **630** having a third ODT signal pin **634** electrically coupled to the ODT bus **605**, a third ODT circuit **636**, and at least one termination pin **638** electrically coupled to the DQ pin **628** of the second memory device **620**. The third ODT circuit **636** selectively electrically terminates the DQ pin **628** of the second memory device **620** through the termination pin **638** in response to an ODT signal received by the third ODT signal pin **634** from the ODT bus **605**. This behavior of the third ODT circuit **636** is schematically illustrated in FIG. **19** by the switch **680** which is either closed (dash-dot line) or opened (solid line).

In certain embodiments, the termination assembly **630** comprises discrete electrical components which are surface-mounted or embedded on the printed-circuit board of the memory module **600**. In certain other embodiments, the termination assembly **630** comprises an integrated circuit mounted on the printed-circuit board of the memory module **600**. Persons skilled in the art can provide a termination assembly **630** in accordance with embodiments described herein.

Certain embodiments of the memory module **600** schematically illustrated by FIG. **19** advantageously avoid the problem schematically illustrated by FIG. **12** of electrically

connecting the internal termination resistances of the DQS pins of the two memory devices in parallel. As described above in relation to FIG. **14**, FIGS. **18** and **19** only show one DQ pin for each memory device for simplicity. Other embodiments have a plurality of DQ pins for each memory device. In certain embodiments, each of the first ODT circuit **616**, the second ODT circuit **626**, and the third ODT circuit **636** are responsive to a high voltage or signal level by enabling the corresponding termination resistors and are responsive to a low voltage or signal level (e.g., ground) by disabling the corresponding termination resistors. In other embodiments, each of the first ODT circuit **616**, the second ODT circuit **626**, and the third ODT circuit **636** are responsive to a high voltage or signal level by disabling the corresponding termination resistors and are responsive to a low voltage or signal level (e.g., ground) by enabling the corresponding termination resistors. Furthermore, the switches **672**, **674**, **676**, **678**, **680** of FIG. **18** are schematic representations of the enabling and disabling operation of the ODT circuits **616**, **626**, **636** and do not signify that the ODT circuits **616**, **626**, **636** necessarily include mechanical switches.

The first ODT signal pin **614** of the first memory device **610** receives an ODT signal from the ODT bus **605**. In response to this ODT signal, the first ODT circuit **616** selectively enables or disables the termination resistance for both the first DQS pin **612** and the DQ pin **618** of the first memory device **610**. The second ODT signal pin **624** of the second memory device **620** is tied (e.g., directly hard-wired) to the voltage (e.g., ground), thereby disabling the internal termination resistors **654**, **658** on the second DQS pin **622** and the second DQ pin **628**, respectively, of the second memory device **620** (schematically shown by open switches **674**, **678** in FIG. **19**). The second DQS pin **622** is electrically coupled to the first DQS pin **612**, so the termination resistance for both the first DQS pin **612** and the second DQS pin **622** is provided by the termination resistor **652** internal to the first memory device **510**.

The termination resistor **656** of the DQ pin **618** of the first memory device **610** is enabled or disabled by the ODT signal received by the first ODT signal pin **614** of the first memory device **610** from the ODT bus **605**. The termination resistance of the DQ pin **628** of the second memory device **620** is enabled or disabled by the ODT signal received by the third ODT signal pin **634** of the termination assembly **630** which is external to the second memory device **620**. Thus, in certain embodiments, the first ODT signal pin **614** and the third ODT signal pin **634** receive the same ODT signal from the ODT bus **605**, and the termination resistances for both the first memory device **610** and the second memory device **620** are selectively enabled or disabled in response thereto when these memory devices are concurrently enabled. In this way, certain embodiments of the memory module **600** schematically illustrated by FIG. **19** provides external or off-chip termination of the second memory device **620**.

Certain embodiments of the memory module **600** schematically illustrated by FIG. **19** advantageously allow the use of two lower-cost readily-available 512-Mb DDR-2 SDRAM devices to provide the capabilities of a more expensive 1-GB DDR-2 SDRAM device. Certain such embodiments advantageously reduce the total cost of the resultant memory module **600**.

Certain embodiments described herein advantageously increase the memory capacity or memory density per memory slot or socket on the system board of the computer system. Certain embodiments advantageously allow for higher memory capacity in systems with limited memory slots. Certain embodiments advantageously allow for flexibility in system board design by allowing the memory module **10** to be used with computer systems designed for different numbers of ranks (e.g., either with computer systems designed for two-rank memory modules or with computer systems designed for four-rank memory modules). Certain embodiments advantageously provide lower costs of board designs.

In certain embodiments, the memory density of a memory module is advantageously doubled by providing twice as many memory devices as would otherwise be provided. For example, pairs of lower-density memory devices can be substituted for individual higher-density memory devices to reduce costs or to increase performance. As another example, twice the number of memory devices can be used to produce a higher-density memory configuration of the memory module. Each of these examples can be limited by the number of chip select signals which are available from the memory controller or by the size of the memory devices. Certain embodiments described herein advantageously provide a logic mechanism to overcome such limitations.

Various embodiments of the present invention have been described above. Although this invention has been described with reference to these specific embodiments, the descriptions are intended to be illustrative of the invention and are not intended to be limiting. Various modifications and applications may occur to those skilled in the art without departing from the true spirit and scope of the invention.

What is claimed is:

1. A circuit configured to be mounted on a memory module having a physical memory domain with a first number of ranks, each rank of the first number of ranks comprising a plurality of double-data-rate (DDR) memory devices that are configured to be activated concurrently with one another and separately from the DDR memory devices of the other ranks by a first number of chip-select signals for receiving and transmitting data having a bit width of the rank, the first number of ranks comprising a first number of DDR memory devices, the memory module configured to be operationally coupled to a computer system, the circuit configurable to:

receive a set of signals comprising bank address signals, row/column address signals, and a second number of chip-select signals, wherein the received set of signals are capable of controlling a memory module having a system memory domain with a second number of ranks of DDR memory devices that are configured to be activated concurrently with one another and separately from the DDR memory devices of the other ranks for receiving and transmitting data having a bit width of the rank, the second number of ranks comprising a second number of DDR memory devices, the second number of ranks smaller than the first number of ranks, the second number of chip-select signals smaller than the first number of chip-select signals, and the second number of DDR memory devices smaller than the first number of DDR memory devices;

generate phase-locked clock signals in response to clock signals of the computer system, wherein the circuit is configurable to transmit the generated phase-locked clock signals to the first number of ranks;

selectively isolate a load of at least one rank of the first number of ranks from the computer system in response to the received set of signals; and

translate between the system memory domain and the physical memory domain, wherein the translating comprises generating the first number of chip-select signals to the first number of ranks in response to the phase-locked clock signals and the received bank address sig-

nals, the received second number of chip-select signals, and at least one of the received row/column address signals.

2. The circuit of claim **1**, wherein the circuit is further configurable to store an address signal of the received set of signals during a row access procedure and to pass the stored address signal as an address signal to the first number of ranks during a subsequent column address procedure.

3. The circuit of claim **1**, wherein the circuit is further configurable to buffer a plurality of the received row/column address signals during a row access procedure and to transmit the plurality of the received row/column address signals to, the first number of ranks during a subsequent column access procedure.

4. The circuit of claim **3**, wherein the plurality of the received row/column address signals are buffered and transmitted by the circuit at least partially in response to the phase-locked clock signals.

5. The circuit of claim **4**, wherein the circuit is configurable so that a single component of the circuit performs two or more of (i) the generating of the phase-locked clock signals, (ii) the buffering of the plurality of the received row/column address signals, and (iii) the translating between the system memory domain and the physical memory domain.

6. The circuit of claim **1**, wherein the circuit is further configurable to receive an input command signal from the computer system and to generate and transmit an output command signal to the first number of ranks.

7. The circuit of claim **6**, wherein the circuit is further configurable to respond to the received bank address signals, the received second number of chip-select signals, and the received row/column address signals by selecting at least one rank of the first number of ranks and transmitting the output command signal to the selected at least one rank of the first number of ranks.

8. The circuit of claim **1**, wherein the system memory domain has a first memory density per rank and the physical memory domain has a second memory density per rank less than the first memory density per rank.

9. The circuit of claim **1**, wherein the circuit has a load and selectively isolating a load of the at least one rank from the computer system comprises presenting the load of the circuit to the computer system.

10. The circuit of claim **1**, wherein the circuit is further configurable to selectively electrically couple the first number of ranks to the computer system and to selectively isolate the first number of ranks from one another and from the computer system.

11. The circuit of claim **10**, wherein the circuit is further configurable to provide data paths for each rank of the first number of ranks, wherein the data paths are separate from one another.

12. The circuit of claim **10**, wherein the circuit is further configurable to provide data paths for each rank of the first number of ranks, wherein the data paths are separate from the computer system.

13. The circuit of claim **1**, wherein the circuit is further configurable to translate between the system memory domain and the physical memory domain by generating control signals corresponding to the physical memory domain in response to one or more control signals of the received set of signals.

14. The circuit of claim **13**, wherein the one or more control signals comprises a row address bit and the circuit is further configurable to latch the row address bit.

15. The circuit of claim **1**, wherein the circuit is further configurable to transmit a set of output signals to the first number of ranks, the set of output signals compatible with the physical memory domain.

16. The circuit of claim **15**, wherein the circuit is further configurable to receive a command signal from the computer system, to select at least one rank of the first number of ranks, and to transmit the command signal to the selected at least one rank.

17. The circuit of claim **1**, wherein the circuit is further configurable to selectively isolate a data signal line of the first number of ranks from the computer system.

18. The circuit of claim **1**, wherein the memory module has attributes and the circuit is further configurable to store data accessible to the computer system, wherein the data characterizes the memory module as having attributes that are different from the attributes of the memory module.

19. The circuit of claim **18**, wherein the attributes are selected from a group consisting of: a number of row addresses, a number of column addresses, a number of DDR memory devices, a data width of the DDR memory devices, a memory density per DDR memory device, a number of ranks, and a memory density per rank.

20. The circuit of claim **1**, wherein the circuit is further configurable to store data accessible to the computer system, wherein the data characterizes the memory module as having the second number of ranks.

21. The circuit of claim **20**, wherein the data further characterizes the memory module as having a memory density per rank that is greater than a memory density per rank of the first number of ranks.

22. The circuit of claim **20**, wherein the data further characterizes the memory module as having the second number of DDR memory devices.

23. The circuit of claim **22**, wherein the data further characterizes the memory module as having a memory density per DDR memory device that is greater than a memory density per DDR memory device of the first number of DDR memory devices.

24. A circuit configured to be mounted on a memory module having a physical memory domain with a first number of ranks, each rank of the first number of ranks comprising a plurality of double-data-rate (DDR) memory devices that are configured to be activated concurrently with one another and separately from the DDR memory devices of the other ranks by a first number of chip-select signals for receiving and transmitting data having a bit width of the rank, the first number of ranks comprising a first number of DDR memory devices, the memory module configured to be operationally coupled to a computer system, the circuit comprising:

means for receiving a set of signals comprising bank address signals, row/column address signals, and a second number of chip-select signals, wherein the received set of signals are capable of controlling a memory module having a system memory domain with a second number of ranks of DDR memory devices that are configured to be activated concurrently with one another and separately from the DDR memory devices of the other ranks for receiving and transmitting data having a bit width of the rank, the second number of ranks comprising a second number of DDR memory devices, the second number of ranks smaller than the first number of ranks, the second number of chip-select signals smaller than the first number of chip-select signals, and the second number of DDR memory devices smaller than the first number of DDR memory devices;

means for generating phase-locked clock signals in response to clock signals of the computer system, wherein the generated phase-locked clock signals are transmitted to the first number of ranks;

means for selectively isolating a load of at least one rank of the first number of ranks from the computer system in response to the set of received signals; and

means for translating between the system memory domain and the physical memory domain, wherein the translating comprises generating the first number of chip-select signals in response to the phase-locked clock signals and the received bank address signals, the received second number of chip-select signals, and at least one of the received row/column address signals.

25. The circuit of claim **24**, wherein the circuit further comprises means for buffering a plurality of the received row/column address signals during a row access procedure to be transmitted to the first number of ranks during a subsequent column access procedure.

26. The circuit of claim **25**, wherein the means for buffering the plurality of the received row/column address signals is at least partially responsive to the phase-locked clock signals.

27. The circuit of claim **26**, wherein two or more of the means for generating the phase-locked clock signals, the means for buffering the plurality of the received row/column address signals, and the means for translating between the system memory domain and the physical memory domain are portions of a single component.

28. The circuit of claim **24**, wherein the circuit further comprises means for generating an output command signal to be transmitted to a selected at least one rank of the first number of ranks, the means for generating the output command signal responsive to the received bank address signals, the received second number of chip-select signals, and the received row/column address signals.

29. The circuit of claim **24**, wherein the memory module has attributes and the circuit further comprises means to store data accessible to the computer system, wherein the data characterizes the memory module as having attributes that are different from the attributes of the memory module.

30. The circuit of claim **29**, wherein the attributes are selected from a group consisting of a number of row addresses, a number of column addresses, a number of DDR memory devices, a data width of the DDR memory devices, a memory density per DDR memory device, a number of ranks, and a memory density per rank.

31. A method of using a memory module having a physical memory domain with a first number of ranks, each rank of the first number of ranks comprising a plurality of double-data-rate (DDR) memory devices that are configured to be activated concurrently with one another and separately from the DDR memory devices of the other ranks by a first number of chip-select signals for receiving and transmitting data having a bit width of the rank, the first number of ranks comprising a first number of DDR memory devices, the memory module configured to be operationally coupled to a computer system, the method comprising:

providing a circuit configured to be mounted on the memory module;

using the circuit to receive a set of signals comprising bank address signals, row/column address signals, and a second number of chip-select signals, wherein the received set of signals are capable of controlling a memory module having a system memory domain with a second number of ranks of DDR memory devices that are configured to be activated concurrently with one another and separately from the DDR memory devices of the other ranks for receiving and transmitting data having a bit width of the rank, the second number of ranks comprising a second number of DDR memory devices, the second number of ranks smaller than the first number of ranks, the second number of chip-select signals smaller than the first number of chip-select signals, and the second number of DDR memory devices smaller than the first number of DDR memory devices;

using the circuit to generate phase-locked clock signals in response to received clock signals of the computer system, and transmitting the generated phase-locked clock signals to the DDR memory devices of the first number of ranks;

using the circuit to selectively isolate a load of at least one rank of the first number of ranks from the computer system in response to the set of received signals; and

using the circuit to translate between the system memory domain and the physical memory domain, wherein the translation comprises providing the first number of chip-select signals to the first number of ranks in response to the phase-locked clock signals and the received bank address signals, the received second number of chip-select signals, and at least one of the received row/column address signals.

32. The method of claim **31**, further comprising using the circuit to buffer a plurality of the received row/column address signals during a row access procedure and to transmit the plurality of the received row/column address signals to the first number of ranks during a subsequent column access procedure.

33. The method of claim **32**, wherein the plurality of the received row/column address signals are buffered and transmitted by the circuit at least partially in response to the phase-locked clock signals.

34. The method of claim **33** wherein a single component of the circuit performs two or more of (i) the generating of the phase-locked clock signals, (ii) the buffering of the plurality of the received row/column address signals, and (iii) the translating between the system memory domain and the physical memory domain.

35. The method of claim **31**, further comprising using the circuit to receive an input command signal from the computer system and to generate and transmit an output command signal to the first number of ranks.

36. The method of claim **35**, further comprising using the circuit to respond to the received bank address signals, the received second number of chip-select signals, and the received row/column address signals by selecting at least one rank of the first number of ranks and transmitting the output command signal to the selected at least one rank of the first number of ranks.

37. The method of claim **31**, wherein using the circuit to selectively isolate a load of the at least one rank from the computer system comprises presenting a load of the circuit to the computer system.

38. The method of claim **31**, further comprising using the circuit to selectively isolate a data signal line of the first number of ranks from the computer system.

39. The method of claim **31**, wherein the memory module has attributes and the method further comprises using the circuit to store data accessible to the computer system, wherein the data characterizes the memory module as having attributes that are different from the attributes of the memory module.

40. The method of claim **39**, wherein the attributes are selected from a group consisting of: a number of row addresses, a number of column addresses, a number of DDR memory devices, a data width of the DDR memory devices, a memory density per DDR memory device, a number of ranks, and a memory density per rank.

* * * * *