21861 U.S. PTO
021605

PTO/SB/16 (12-04)
Approved for use through 07/31/2006. OMB 0651-0032
U.S. Patent and Trademark Office; U.S. DEPARTMENT OF COMMERCE
Under the Paperwork Reduction Act of 1995, no persons are required to respond to a collection of information unless it displays a valid OMB control number.

11264 U.S. PTO
60/653429
021605

PROVISIONAL APPLICATION FOR PATENT COVER SHEET

This is a request for filing a PROVISIONAL APPLICATION FOR PATENT under 37 CFR 1.53 (c).

Express Mail Label No. EV 435257643 US

INVENTOR(S)

Given Name (first and middle [if any])	Family Name or Surname	Residence (City and either State or Foreign Country)
Christopher J	Hansen	Sunnyvale, CA
Mushar T.	Moorti	Mountain View, CA
Jason	Trachewsky	Menlo Park, CA

Additional inventors are being named on the 0 *separately numbered sheets attached hereto*

TITLE OF THE INVENTION (500 characters max)

METHOD AND SYSTEM FOR COMPROMISE GREENFIELD PREAMBLES FOR 802.11N

Direct all correspondence to: **CORRESPONDENCE ADDRESS**

☒ The address corresponding to Customer Number: 23,446

OR

☐ Firm *or* Individual Name

Address

City	State	Zip
Country	Telephone	Fax

ENCLOSED APPLICATION PARTS ***(check all that apply)***

☐ Application Data Sheet. See 37 CFR 1.76

☒ Specification *Number of Pages* 30

☒ Drawing(s) *Number of Sheets* 8

☐ CD(s), Number of CDs ____

☐ Other (specify) ____

Application Size Fee: If the specification and drawings exceed 100 sheets of paper, the application size fee due is $250 ($125 for small entity) for each additional 50 sheets or fraction thereof. See 35 U.S.C. 41(a)(1)(G) and 37 CFR 1.16(s).

METHOD OF PAYMENT OF FILING FEES AND APPLICATION SIZE FEE FOR THIS PROVISIONAL APPLICATION FOR PATENT

☐ Applicant claims small entity status. See 37 CFR 1.27.

TOTAL FEE AMOUNT ($)

☒ A check or money order is enclosed to cover the filing fee and application size fee (if applicable). 200.00

☐ Payment by credit card. Form PTO-2038 is attached

☒ The Director is hereby authorized to charge additional filing fees (if applicable) or credit any overpayment to Deposit Account Number: 13-0017 . A duplicative copy of this form is enclosed for fee processing.

The invention was made by an agency of the United States Government or under a contract with an agency of the United States Government.

☒ No.

☐ Yes, the name of the U.S. Government agency and the Government contract number are: ____.

SIGNATURE _____ Date February 16, 2005

TYPED or PRINTED NAME Christopher C. Winslade REGISTRATION NO. (*if appropriate*) 36,308

TELEPHONE 312-775-8000 Docket Number: 16490US01

USE ONLY FOR FILING A PROVISIONAL APPLICATION FOR PATENT

This collection of information is required by 37 CFR 1.51. The information is required to obtain or retain a benefit by the public which is to file (and by the USPTO to process) an application. Confidentiality is governed by 35 U.S.C. 122 and 37 CFR 1.11 and 1.14. This collection is estimated to take 8 hours to complete, including gathering, preparing, and submitting the completed application form to the USPTO. Time will vary depending upon the individual case. Any comments on the amount of time you require to complete this form and/or suggestions for reducing this burden, should be sent to the Chief Information Officer, U.S. Patent and Trademark Office, U.S. Department of Commerce, P.O. Box 1450, Alexandria, VA 22313-1450. DO NOT SEND FEES OR COMPLETED FORMS TO THIS ADDRESS. **SEND TO: Commissioner for Patents, P.O. Box 1450, Alexandria, VA 22313-1450.**

INTEL-1010
9,584,262

"Express Mail" Mailing Label No.: EV 435257643 US

Date of Deposit: February 16, 2005

ATTORNEY DOCKET NO. 16490US01

METHOD AND SYSTEM FOR COMPROMISE GREENFIELD PREAMBLES FOR 802.11N

CROSS-REFERENCE TO RELATED APPLICATIONS/INCORPORATION BY REFERENCE

[01] This application makes reference to:

United States Patent Application Serial No. 10/973,595 filed October 26, 2004;

United States Patent Application Serial No. _____ (Attorney Docket No. 16354US02) filed February 7, 2005; and

United States Patent Application Serial No. _____ (Attorney Docket No. 16307US02) filed February 7, 2005.

[02] All of the above state applications are hereby incorporated herein by reference in their entirety.

FIELD OF THE INVENTION

[03] Certain embodiments of the invention relate to wireless communication. More specifically, certain embodiments of the invention relate to a method and system for compromise Greenfield preambles for 802.11n.

BACKGROUND OF THE INVENTION

[04] The Institute for Electrical and Electronics Engineers (IEEE), in resolution IEEE 802.11, also referred as "802.11", has defined a plurality of specifications which are related to wireless networking. Among them are specifications for "closed loop" feedback mechanisms by which a receiving mobile terminal may feed back information

to a transmitting mobile terminal to assist the transmitting mobile terminal in adapting signals which are sent to the receiving mobile terminal.

[05] Smart antenna systems combine multiple antenna elements with a signal processing capability to optimize the pattern of transmitted signal radiation and/or reception in response to the communications medium environment. The process of optimizing the pattern of radiation is sometimes referred to as "beamforming," which may utilize linear array mathematical operations to increase the average signal to noise ratio (SNR) by focusing energy in desired directions. In conventional smart antenna systems, only the transmitter or the receiver may be equipped with more than one antenna, and may typically be located in the base transceiver station (BTS) where the cost and space associated with smart antenna systems have been perceived as more easily affordable than on mobile terminals such as cellular telephones. Such systems are also known as multiple input single output (MISO) when a multiple antenna transmitter is transmitting signals to a single antenna receiver, or single input multiple output (SIMO) when a multiple antenna receiver is receiving signals that have been transmitted from a single antenna transmitter. With advances in digital signal processing (DSP) integrated circuits (ICs) in recent years, multiple antenna multiple output (MIMO) systems have emerged in which mobile terminals incorporate smart antenna systems comprising multiple transmit antenna and multiple receive antenna. One area of early adoption of MIMO systems has been in the field of wireless networking, particularly as applied to wireless local area networks (WLANs) where transmitting mobile terminals communicate with receiving mobile terminals. IEEE resolution 802.11 comprises specifications for communications between mobile terminals in WLAN systems.

[06] Signal fading is a significant problem in wireless communications systems, often leading to temporary loss of communications at mobile terminals. One of the most pervasive forms of fading is known as multipath fading, in which dispersion of transmitted signals due to incident reflections from buildings and other obstacles, results

in multiple versions of the transmitted signals arriving at a receiving mobile terminal. The multiple versions of the transmitted signal may interfere with each other and may result in a reduced signal level detected at the receiving mobile terminal. When versions of the transmitted signal are 180° out of phase they may cancel each other such that a signal level of 0 is detected. Locations where this occurs may correspond to "dead zones" in which communication to the wireless terminal is temporarily lost. This type of fading is also known as "Rayleigh" or "flat" fading.

[07] A transmitting mobile terminal may transmit data signals in which data is arranged as "symbols". The transmission of symbols may be constrained such that after a symbol is transmitted, a minimum period of time, T_s, must transpire before another symbol may be transmitted. After transmission of a symbol from a transmitting mobile terminal, some period of dispersion time, T_d, may transpire which may be the time over which the receiving mobile terminal is able to receive the symbol, including multipath reflections. The time T_d may not need to account for the arrival of all multipath reflections because interference from later arriving reflected signals may be negligible. If the period T_s is less than T_d there is a possibility that the receiving mobile terminal will start receiving a second symbol from the transmitting mobile terminal while it is still receiving the first symbol. This may result in inter-symbol interference (ISI), producing distortion in received signals, and possibility resulting in a loss of information. The quantity $1/T_d$ is also referred to as the "coherence bandwidth" which may indicate the maximum rate at which symbols, and correspondingly information, may be transmitted via a given communications medium. One method to compensate for ISI in signals may entail utilizing DSP algorithms which perform adaptive equalization.

[08] Another important type of fading is related to motion. When a transmitting mobile terminal, or a receiving mobile terminal is in motion, the Doppler phenomenon may affect the frequency of the received signal. The frequency of the received signal may be changed by an amount which is a function of the velocity at which a mobile terminal is moving. Because of the Doppler effect, ISI may result when a mobile terminal is in

motion, particularly when the mobile terminal is moving at a high velocity. Intuitively, if a receiving mobile terminal is in motion and nearing a transmitting mobile terminal, the distance between the two mobile terminals will change as a function of time. As the distance is reduced, the propagation delay time, T_p, which is the time between when a transmitter first transmits a signal and when it first arrives at a receiver, is also reduced. As the mobile terminals become closer it is also possible that T_d may be increased if, for example, the transmitting mobile terminal does not reduce the radiated power of transmitted signals. If T_p becomes less than T_d, there may be ISI due to the Doppler effect. This case, which illustrates why data rates may be reduced for mobile terminals that are in motion, is referred to as "fast fading". Because fast fading may distort signals at some frequencies while not distorting signals at other frequencies, fast fading may also be referred to as "frequency selective" fading.

[09] Smart antenna systems may transmit multiple versions of a signal in what is known as "spatial diversity". A key concept in spatial diversity is that the propagation of multiple versions of a signal, or "spatial stream", from different antenna may significantly reduce the probability of flat fading at the receiving mobile terminal since not all of the transmitted signals would have the same dead zone.

[10] Current transmission schemes in MIMO systems typically fall into two categories: data rate maximization, and diversity maximization. Data rate maximization focuses on increasing the aggregate data transfer rate between a transmitting mobile terminal and a receiving mobile terminal by transmitting different spatial streams from different antenna. One method for increasing the data rate from a transmitting mobile terminal would be to decompose a high bit rate data stream into a plurality of lower bit rate data streams such that the aggregate bit rates among the plurality of lower bit rate data streams is equal to that of the high bit rate data stream. Next, each of the lower bit rate data streams may be mapped to at least one of the transmitting antenna for transmission. In addition, each signal comprising one of the lower bit rate data streams is multiplicatively scaled by a weighting factor prior to transmission. The plurality of

multiplicative scale factors applied to the plurality of signals comprising the lower bit rate data streams may be utilized to form the transmitted "beam" in the beamforming technique. An example of a data rate maximization scheme is orthogonal frequency division multiplexing (OFDM), in which each of the plurality of signals is modulated by a different frequency carrier signal prior to mapping and multiplicative scaling. OFDM transmission may be resistant to multipath fading in that a portion, but most likely not all, of the data transmitted may be lost at any instant in time due to multipath fading.

[11] Diversity maximization focuses on increasing the probability that a signal transmitted by a transmitting mobile terminal will be received at a receiving mobile terminal, and on increasing the SNR of received signals. In diversity maximization, multiple versions of the same signal may be transmitted by a plurality of antenna. The case in which a transmitting mobile terminal is transmitting the same signal via all of its transmitting antenna may be the pure spatial diversity case in which the aggregate data transfer rate may be equal to that of a single antenna mobile terminal. There is a plurality of hybrid adaptations of the data rate and spatial diversity maximization schemes which achieve varying data rates and spatial diversities.

[12] MIMO systems employing beamforming may enable the simultaneous transmission of multiple signals occupying a shared frequency band, similar to what may be achieved in code division multiple access (CDMA) systems. For example, the multiplicative scaling of signals prior to transmission, and a similar multiplicative scaling of signals after reception, may enable a specific antenna at a receiving mobile terminal to receive a signal which had been transmitted by a specific antenna at the transmitting mobile terminal to the exclusion of signals which had been transmitted from other antenna. However, MIMO systems may not require the frequency spreading techniques used in CDMA transmission systems. Thus, MIMO systems may make more efficient utilization of frequency spectrum.

[13] One of the challenges in beamforming is that the multiplicative scale factors which are applied to transmitted and received signals may be dependent upon the

characteristics of the communications medium between the transmitting mobile terminal and the receiving mobile terminal. A communications medium, such as a radio frequency (RF) channel between a transmitting mobile terminal and a receiving mobile terminal, may be represented by a transfer system function, H. The relationship between a time varying transmitted signal, x(t), a time varying received signal, y(t), and the systems function may be represented as shown in equation [1]:

$$y(t) = H \times x(t) + n(t) \text{, where} \qquad \text{equation[1]}$$

n(t) represents noise which may be introduced as the signal travels through the communications medium and the receiver itself. In MIMO systems, the elements in equation[1] may be represented as vectors and matrices. If a transmitting mobile terminal comprises M transmitting antenna, and a receiving mobile terminal comprises N receiving antenna, then y(t) may be represented by a vector of dimensions Nx1, x(t) may be represented by a vector of dimensions Mx1, n(t) by a vector of dimensions Nx1, and H may be represented by a matrix of dimensions NxM. In the case of fast fading, the transfer function, H, may itself become time varying and may thus also become a function of time, H(t). Therefore, individual coefficients, $h_{ij}(t)$, in the transfer function H(t) may become time varying in nature.

[14] In MIMO systems which communicate according to specifications in IEEE resolution 802.11, the receiving mobile terminal may compute H(t) each time a frame of information is received from a transmitting mobile terminal based upon the contents of a preamble field in each frame. The computations which are performed at the receiving mobile terminal may constitute an estimate of the "true" values of H(t) and may be known as "channel estimates". For a frequency selective channel there may be a set of H(t) coefficients for each tone that is transmitted via the RF channel. To the extent that H(t), which may be referred to as the "channel estimate matrix", changes with time and to the extent that the transmitting mobile terminal fails to adapt to those changes, information loss between the transmitting mobile terminal and the receiving mobile terminal may result.

[15] Higher layer communications protocols, such as the transmission control protocol (TCP) may attempt to adapt to detected information losses, but such adaptations may be less than optimal and may result in slower information transfer rates. In the case of fast fading, the problem may actually reside at lower protocol layers, such as the physical (PHY) layer, and the media access control (MAC) layer. These protocol layers may be specified under IEEE 802.11 for WLAN systems. The method by which adaptations may be made at the PHY and MAC layers, however, may comprise a mechanism by which a receiving mobile terminal may provide feedback information to a transmitting mobile terminal based upon channel estimates which are computed at the receiving mobile terminal.

[16] Existing closed loop receiver to transmitter mechanisms, also referred as "RX to TX feedback mechanisms", that exist under IEEE 802.11 include acknowledgement (ACK) frames, and transmit power control (TPC) requests and reports. The TPC mechanisms may allow a receiving mobile terminal to communicate information to a transmitting mobile terminal about the transmit power level that should be used, and the link margin at the receiving mobile terminal. The link margin may represent the amount of signal power that is being received, which is in excess of a minimum power required by the receiving mobile terminal to decode message information, or frames, that it receives.

[17] A plurality of proposals is emerging for new feedback mechanisms as candidates for incorporation in IEEE resolution 802.11. Among the proposals for new feedback mechanisms are proposals from TGn (task group N) sync, which is a multi-industry group that is working to define proposals for next generation wireless networks which are to be submitted for inclusion in IEEE 802.11, and Qualcomm. The proposals may be based upon what may be referred as a "sounding frame". The sounding frame method may comprise the transmitting of a plurality of long training sequences (LTSs) that match the number of transmitting antenna at the receiving mobile terminal. The

sounding frame method may not utilize beamforming or cyclic delay diversity (CDD). In the sounding frame method, each antenna may transmit independent information.

[18] The receiving mobile terminal may estimate a complete reverse channel estimate matrix, H_{up}, for the channel defined in an uplink direction from the receiving mobile terminal to the transmitting mobile terminal. This may require calibration with the transmitting mobile terminal where the transmitting mobile terminal determines the forward channel estimate matrix, H_{down}, for the channel defined in a downlink direction from the transmitting mobile terminal to the receiving mobile terminal. To compensate for possible differences between H_{up} and H_{down} the receiving mobile terminal may be required to receive H_{down} from the transmitting mobile terminal, and to report H_{up} - H_{down} as feedback information. The TGn sync proposal may not currently define a calibration response. A channel estimate matrix may utilize 24 or more bits for each channel and for each tone, comprising 12 or more bits in an in-phase (I) component and 12 or more bits in a quadrature (Q) component.

[19] According to the principle of channel reciprocity, the characteristics of the RF channel in the direction from the transmitting mobile terminal to the receiving mobile terminal may be the same as the characteristics of the RF channel in the direction from the receiving mobile terminal to the transmitting mobile terminal $H_{up} = H_{down}$. In actual practice, however, there may be differences in the electronic circuitry between the respective transmitting mobile terminal and receiving mobile terminal such that, in some cases, there may not be channel reciprocity. This may require that a calibration process be performed in which H_{up} and H_{down} are compared to reconcile differences between the channel estimate matrices. However, there may be limitations inherent in some calibration processes. For example, some proposals for new IEEE 802.11 feedback mechanisms may be limited to performing "diagonal calibrations". These methods may not be able to account for conditions in which there are differences in non-diagonal coefficients between H_{up} and H_{down}. These non-diagonal coefficient differences may be the result of complicated antenna couplings at the respective transmitting mobile

terminal and/or receiving mobile terminal. Accordingly, it may be very difficult for a calibration process to correct for these couplings. The ability of a calibration technique to accurately characterize the RF channel at any instant in time may be dependent upon a plurality of dynamic factors such as, for example, temperature variations. Another limitation of calibration procedures is that it is not known for how long a calibration renders an accurate characterization of the RF channel. Thus, the required frequency at which the calibration technique must be performed may not be known.

[20] Further limitations and disadvantages of conventional and traditional approaches will become apparent to one of skill in the art, through comparison of such systems with some aspects of the present invention as set forth in the remainder of the present application with reference to the drawings.

BRIEF SUMMARY OF THE INVENTION

[21] A system and/or method for compromise greenfield preambles for 802.11n.

[22] These and other advantages, aspects and novel features of the present invention, as well as details of an illustrated embodiment thereof, will be more fully understood from the following description and drawings.

BRIEF DESCRIPTION OF SEVERAL VIEWS OF THE DRAWINGS

[23] FIG. 1 is an exemplary block diagram of a transmitter and a receiver in a MIMO system, in accordance with an embodiment of the invention.

[24] FIG. 2a illustrates an exemplary physical layer protocol data unit, in accordance with an embodiment of the invention.

[25] FIG. 2b illustrates an exemplary data field in a PPDU, in accordance with an embodiment of the invention.

[26] FIG. 3a shows exemplary training sequences and headers for mixed mode access in accordance with a Tgnsync proposal, in accordance with an embodiment of the invention.

[27] FIG. 3b shows an exemplary L-SIG header field for mixed mode access in accordance with a Tgnsync proposal, in accordance with an embodiment of the invention.

[28] FIG. 3c shows an exemplary HT-SIG header field for mixed mode access in accordance with a Tgnsync proposal, in accordance with an embodiment of the invention.

[29] FIG. 4a shows exemplary training sequences and headers for greenfield access in accordance with a WWiSE proposal for N_{SS}=2, in accordance with an embodiment of the invention.

[30] FIG. 4b shows an exemplary Signal-N header field for greenfield access in accordance with a WWiSE proposal, in accordance with an embodiment of the invention.

[31] FIG. 4c shows exemplary training sequences and headers for greenfield access in accordance with a WWiSE proposal for N_{SS}=4, in accordance with an embodiment of the invention.

[32] FIG. 5 shows exemplary training sequences and headers for greenfield access for $N_{SS}>2$, in accordance with an embodiment of the invention.

[33] FIG. 6 shows exemplary training sequences and headers for mixed mode access for $N_{SS}>2$, in accordance with an embodiment of the invention.

DETAILED DESCRIPTION OF THE INVENTION

[34] Certain embodiments of the invention relate to a method and system for compromise greenfield preambles for 802.11n, which utilizes a channel sounding mechanism to communicate information between a transmitter and a receiver.

[35] Aspects of the method are provided, substantially as shown and described with respect to at least one of FIGs. 1-6, for a sounding mechanism to communicate information between a transmitter and a receiver in a closed loop MIMO WLAN system.

[36] Another embodiment of the invention may provide a machine-readable storage, having stored thereon, a computer program having at least one code section executable by a machine, thereby causing the machine to perform the steps as described above for compromise greenfield preambles for 802.11n, which utilizes a channel sounding mechanism to communicate information between a transmitter and a receiver.

[37] Aspects of the system are provided, substantially as shown and described with respect to at least one of FIGs. 1-6, for compromise greenfield preambles for 802.11n.

[38] Within the IEEE organization, IEEE 802.11 task group N (TGn) has been chartered to develop a standard to enable WLAN devices to achieve throughput rates beyond 100 Mbits/s. This standard may be documented in IEEE resolution 802.11n. An objective of TGn, which may represent a group that is separate from Tgnsync, is to develop a standard that will enable WLAN devices compatible with IEEE 802.11n to also interoperate with IEEE 802.11 devices that are not compatible with IEEE 802.11n. WLAN devices that are compatible with IEEE 802.11 but are not compatible with IEEE 802.11n may be referred to as legacy IEEE 802.11 WLAN devices. WLAN devices which are compatible with IEEE 802.11n that communicate with other IEEE 802.11n compatible WLAN devices in an IEEE basic service set (BSS) to which no legacy IEEE 802.11 WLAN devices are currently associated may be capable of operating in a greenfield access mode. In greenfield access, communications between the WLAN devices may utilize capabilities specified in IEEE 802.11n which may not be accessible

to legacy WLAN devices. By contrast, WLAN devices which are compatible with IEEE 802.11n that communicate with IEEE 802.11 compatible legacy WLAN devices in an IEEE BSS to which legacy IEEE 802.11 WLAN devices are currently associated may utilize mixed mode access. In mixed mode access, communications between IEEE 802.11 compatible WLAN devices may comprise information that advises legacy IEEE 802.11 WLAN devices that WLAN devices in the BSS are engaged in communications based on IEEE 802.11n.

[39] Among proposals received by TGn are proposals from, the worldwide spectrum efficiency (WWiSE) group, and TGnsync. Current proposals from TGnsync may not provide a mechanism to support greenfield access. As such, mixed mode access communications based on current TGnsync may be required to comprise information that may not be required in greenfield access communications. Embodiments of this invention may comprise a plurality of proposals that seek to define a compromise proposal to TGn which is based on aspects of current proposals from WWiSE and TGnsync.

[40] FIG. 1 is an exemplary block diagram of a transmitter and a receiver in a MIMO system, in accordance with an embodiment of the invention. With reference to FIG. 1 is shown a transmitter 100 and a receiver 101. The transmitter 100 may comprise a coding block 102, a puncture block 104, an interleaver block 106, a plurality of mapper blocks 108a...108n, a plurality of inverse fast Fourier transform (IFFT) blocks 110a...110n, a beamforming V matrix block 112, and a plurality of digital to analog (D/A) conversion and antenna front end blocks 114a...114n. The receiver 101 may comprise a plurality of antenna front end and analog to digital (A/D) conversion blocks 116a...116n, a beamforming U^* matrix block 118, a plurality of fast Fourier transform (FFT) blocks 120a...120n, a channel estimates block 122, a plurality of equalizer blocks 124a...124n, a plurality of demapper blocks 126a...126n, a deinterleaver block 128, a depuncture block 130, and a Viterbi decoder block 132.

[41] The variables V and U^* in beamforming blocks 112 and 118 respectively refer to matrices utilized in the beamforming technique. United States Application Serial No. _____ (Attorney Docket No. 16307US02) filed February 7, 2005, provides a detailed description of Eigen beamforming and is hereby incorporated herein by reference in its entirety.

[42] In the transmitter 100, the coding block 102 may transform received binary input data blocks by applying a forward error correction (FEC) technique such as, for example, binary convolutional coding (BCC). The application of FEC techniques, also known as "channel coding", may improve the ability to successfully recover transmitted data at a receiver by appending redundant information to the input data prior to transmission via an RF channel. The ratio of the number of bits in the binary input data block to the number of bits in the transformed data block may be known as the "coding rate". The coding rate may be specified using the notion i_b/t_b, where t_b represents the total number of bits which comprise a coding group of bits, while i_b represents the number of information bits that are contained in the group of bits t_b. Any number of bits $t_b - i_b$ may represent redundant bits which may enable the receiver 101 to detect and correct errors introduced during transmission. Increasing the number of redundant bits may enable greater capabilities at the receiver to detect and correct errors in information bits. The penalty for this additional error detection and correction capability may result in a reduction in the information transfer rates between the transmitter 100 and the receiver 101. The invention is not limited to BCC and a plurality of coding techniques such as, for example, Turbo coding, or low density parity check (LDPC) coding may also be utilized.

[43] The puncture block 104 may receive transformed binary input data blocks from the coding block 102 and alter the coding rate by removing redundant bits from the received transformed binary input data blocks. For example, if the coding block 102 implemented a ½ coding rate, 4 bits of data received from the coding block 102 may comprise 2 information bits, and 2 redundant bits. By eliminating 1 of the redundant bits

in the group of 4 bits, the puncture block 104 may adapt the coding rate from ½ to 2/3. The interleaver block 106 may rearrange bits received in a coding rate-adapted data block from the puncture block 104 prior to transmission via an RF channel to reduce the probability of uncorrectable corruption of data due to burst of errors, impacting contiguous bits, during transmission via an RF channel. The output from the interleaver block 106 may also be divided into a plurality of streams where each stream may comprise a non-overlapping portion of the bits from the received coding rate-adapted data block. Therefore, for a given number of bits in the coding rate-adapted data block, b_{db}, a given number of streams from the interleaver block 106, n_{st}, and a given number of bits assigned to an individual stream i by the interleaver block 106, $b_{st}(i)$:

$$b_{db} = \sum_{i=1}^{n_{st}} b_{st}(i) \qquad \text{equation[2]}$$

[44] The plurality of mapper blocks 108a...108n may comprise a number of individual mapper blocks which is equal to the number of individual streams generated by the interleaver block 106. Each individual mapper block 108a...108n may receive a plurality of bits from a corresponding individual stream, mapping those bits into a "symbol" by applying a modulation technique based on a "constellation" utilized to transform the plurality of bits into a signal level representing the symbol. The representation of the symbol may be a complex quantity comprising in-phase (I) and quadrature (Q) components. The mapper block 108a...108n for stream i may utilize a modulation technique to map a plurality of bits, $b_{st}(i)$, into a symbol.

[45] The plurality of IFFT blocks 110a...110n may receive symbols from the plurality of mapper blocks 108a...108n where each IFFT block, such as 110a, may receive a symbol from a corresponding mapper block, such as 108a. Each IFFT block 110a...110n may subdivide the bandwidth of the RF channel into a plurality of n sub-band frequencies to implement orthogonal frequency division multiplexing (OFDM), buffering a plurality of received symbols equal to the number of sub-bands. Each buffered symbol may be modulated by a carrier signal whose frequency is based on that

of one of the sub-bands. Each of the IFFT blocks 110a...110n may then independently sum their respective buffered and modulated symbols across the frequency sub-bands to perform an n-point IFFT thereby generating a composite OFDM signal.

[46] The beamforming V matrix block 112 may apply the beamforming technique to the plurality of composite OFDM signals, or "spatial modes", generated from the plurality of IFFT blocks 110a...110n. The beamforming V matrix block 112 may generate a plurality of signals where the number of signals generated may be equal to the number of transmitting antenna at the transmitter 100. Each signal in the plurality generated by the beamforming V block 112 may comprise a weighted sum of at least one of the received composite OFDM signals from the IFFT blocks 110a...110n. The plurality of D to A conversion and antenna front end blocks 114a...114n may receive the plurality of signals generated by the beamforming V matrix block 112, converting the digital signal representation received from the beamforming V matrix block 112 to an analog RF signal which may be amplified and transmitted via an antenna. The plurality of D to A conversion and antenna front end blocks 114a...114n may equal the number of transmitting antenna at the transmitter 100. Each D to A conversion and antenna front end block 114a...114n may receive one of the plurality of signals from the beamforming V matrix block 112 and may utilize an antenna to transmit one RF signal via an RF channel.

[47] In the receiver 101, the plurality antenna front end and A to D conversion blocks 116a...116n may receive analog RF signals via an antenna, converting the RF signal to baseband and generating a digital equivalent of the received analog baseband signal. The digital representation may be a complex quantity comprising I and Q components. The number of antenna front end and A to D conversion blocks 116a...116n may be equal to the number of receiving antenna at the receiver 101. The beamforming U^* block 118 may apply the beamforming technique to the plurality of digital signals received from the plurality of antenna front end and A to D conversion blocks 116a...116n. The beamforming U^* block 118 may generate a plurality of signals where

the number of signals generated may be equal to the number of streams utilized in generating the signals at the transmitter 100. Each signal in the plurality generated by the beamforming U^* block 118 may comprise a weighted sum of at least one of the digital signals received from the antenna front end and A to D conversion blocks 116a...116n. The plurality of FFT blocks 120a...120n may receive a plurality of signals, or spatial modes, from the beamforming U^* block 118. The plurality of FFT blocks 120a...120n may be equal to the number of signals generated by the beamforming U^* block 118. Each FFT block 120a...120n may receive a signal from the beamforming U^* block 118, independently applying an n-point FFT technique, demodulating the signal by a plurality of carrier signals based on the n sub-band frequencies utilized in the transmitter 100. The demodulated signals may be mathematically integrated over one sub band frequency period by each of the plurality of FFT blocks 120a...120n to extract the n symbols from contained in each of the plurality of OFDM signals received by the receiver 101.

[48] The channel estimates block 122 may utilize preamble information contained in a received RF signal to compute channel estimates. The plurality of equalizer blocks 124a...124n may receive symbols generated by the plurality of FFT blocks 120a...120n. The plurality of equalizer blocks 124a...124n may be equal to the number of FFT blocks 120a...120n. Each of the equalizer blocks 124a...124n may receive a signal from one of the FFT blocks 120a...120n, independently processing the signal based on input from the channel estimates block 122 to recover the symbol originally generated by the transmitter 100. Each equalizer block 124a...124n may comprise suitable logic, circuitry, and/or code that may be adapted to transform symbols received from an FFT block 120a...120n to compensate for fading in the RF channel. The plurality of demapper blocks 126a...126n may receive symbols from the plurality of equalizer blocks 124a...124n, reverse mapping each symbol to a plurality of bits by applying a demodulation technique, based on the modulation technique utilized in generating the symbol at the transmitter 100, to transform the symbol into a plurality of bits. The plurality of demapper blocks 126a...126n may be equal to the number of equalizer

blocks 124a...124n, which may also be equal to the number of streams in the transmitter 100.

[49] The deinterleaver block 128 may receive a plurality of bits from each of the demapper blocks 126a...126n, rearranging the order of bits among the received plurality of bits. The deinterleaver block 128 may rearrange the order of bits from the plurality of demapper blocks 126a...126n in, for example, the reverse order of that utilized by the interleaver 106 in the transmitter 100. The depuncture block 130 may insert "null" bits into the output data block received from the deinterleaver block 128 that were removed by the puncture block 104. The Viterbi decoder block 132 may decode a depunctured output data block, applying a decoding technique which may recover the binary data blocks that were input to the coding block 102.

[50] FIG. 2a illustrates an exemplary physical layer protocol data unit (PPDU), in accordance with an embodiment of the invention. With reference to FIG. 2a there is shown a physical layer convergence protocol (PLCP) preamble field 202, a PLCP header field 204, and a data field 206. FIG. 2b illustrates an exemplary data field in a PPDU, in accordance with an embodiment of the invention. With reference to FIG. 2b there is shown a physical layer service data unit (PSDU) field 252, a tail field 254, and a pad field 256. In an exemplary data field, as shown in FIG. 2b, the PSDU may comprise a media access control (MAC) layer frame received from the MAC layer in the IEEE 802.11 protocol stack. In an exemplary PPDU, as shown in FIG. 2a, the data field 206 may comprise 1,500 octets of binary data.

[51] FIG. 3a shows exemplary training sequences and headers for mixed mode access in accordance with a Tgnsync proposal, in accordance with an embodiment of the invention. With reference to FIG. 3a there is shown a plurality of PPDUs 302, 322, and 342. The PPDU 302 may comprise a legacy short training field (L-STF) 304, a legacy long training field (L-LTF) 306, a legacy signal field (L-SIG) 308, a high throughput signal field (HT-SIG) 310, a high throughput short training field for spatial stream number 1 ($HT\text{-}STF_1$) 312, and a plurality of high throughput long training fields

for spatial stream number 1 and training symbols number 1 through N (where N is the total number of training symbols sent) ($HT\text{-}LTF_{1,1}$...$HT\text{-}LTF_{1,N}$) 314...316. The PPDU 322 comprises a legacy short training field 324, a legacy long training field 326, a legacy signal field 328, a high throughput signal field 330, a high throughput short training field for spatial stream number 2 332, and a plurality of high throughput long training fields for spatial stream number 2 and training symbols number 1 through N 334...336. The PPDU 342 comprises a legacy short training field 344, a legacy long training field 346, a legacy signal field 348, a high throughput signal field 350, a high throughput short training field for spatial stream number N_{SS} 352, and a plurality of high throughput long training fields for spatial stream number N_{SS} and training sequence symbols number 1 through N 354...356. With reference to FIG. 3a, for $N_{SS}>3$ there may be additional PPDU similar in structure to PPDU 302, 322, and 342 as one of average skill in the art would be able to determine.

[52] FIG. 3b shows an exemplary L-SIG header field for mixed mode access in accordance with a Tgnsync proposal, in accordance with an embodiment of the invention. With reference to FIG. 3b, there is shown a L-SIG header 362. The L-SIG header 362 may comprise a rate field 364, a reserve field 366, a length field 368, a parity field 370, and a tail field 372. The L-SIG header 362 may comprise 24 bits of binary information. The rate field 364 may comprise 4 bits of binary information. The reserve field may comprise 1 bit of binary information. The length field 368 may comprise 12 bits of binary information. The parity field 370 may comprise 1 bit of binary information. The tail field 372 may comprise 6 bits of binary information.

[53] FIG. 3c shows an exemplary HT-SIG header field for mixed mode access in accordance with a Tgnsync proposal, in accordance with an embodiment of the invention. With reference to FIG. 3c, there is shown an HT-SIG header field 376. The HT-SIG header may comprise a length field 378, a modulation and coding scheme (MCS) field 380, an advanced coding field 382, a reserved field 383, a sounding packet field 384, a number of transmit (TX) antennas field 386, a short guard interval (GI) field

388, an aggregation field 390, a scrambler initialization field 392, a 20 MHz or 40 MHz bandwidth (BW) field 394, a cyclical redundancy check field 396, and a tail field 398. The length field 378 may comprise 18 bits of binary information. The MCS field 380 may comprise 6 bits of binary information. The advanced coding field 382 may comprise 1 bit of binary information. The reserved field may comprise 1 bit of binary information. The sounding packet field 384 may comprise 1 bit of binary information. The number of TX antennas field 386 may comprise 2 bits of binary information. The short GI field 388 may comprise 1 bit of binary information. The aggregation field 390 may comprise 1 bit of binary information. The scrambler init field 392 may comprise 2 bits of binary information. The 20 MHz or 40 MHz bandwidth field 394 may comprise 1 bit of binary information. The CRC field 396 may comprise 8 bits of binary information. The tail field 398 may comprise 6 bits of binary information.

[54] Each of the L-STF fields 304, 324, and 344 may be of 8 μs in duration, or equivalent in time duration to 2 IEEE 802.11n OFDM symbols, where each symbol may be 4 μs in duration. Each of the L-LTF fields 306, 326, and 346 may be 8 μs, or equivalent in time duration to 2 IEEE 802.11n OFDM symbols. Each of the L-SIG fields 308, 328, and 348 may be of 4 μs in duration, or equivalent in time duration to 1 IEEE 802.11n OFDM symbol. Each of the HT-SIG fields 310, 330, and 350 may be of 8 μs in duration, or equivalent in time duration to 2 IEEE 802.11n OFDM symbols. Each of the HT-STF1 fields 312, 332, and 352 may be of 2.4 μs in duration. Each of the plurality of $HT\text{-}LTF_{1,1}\ldots HT\text{-}LTF_{1,N}$, $HT\text{-}LTF_{2,1}\ldots HT\text{-}LTF_{2,N},\ldots,HT\text{-}LTF_{NSS,1}\ldots HT\text{-}LTF_{NSS,N}$ fields 314...316, 334...336,...,354...356 may be 7.2 μs in duration.

[55] In an exemplary PPDU comprising 1,500 octets of data 206 (FIG. 2a), the data may be of 13 IEEE 802.11n OFDM symbols in duration. This may be based on a 243 Mbits/s transmission mode comprising 2 spatial streams, 40 MHz bandwidth, 64 point FFT, 64 QAM modulation type, and a coding rate of ¾. Each OFDM symbol may comprise 927 bits of binary information. Consideration of FIG. 3a may indicate that a PPDU based on the TGnsync proposal for mixed mode access may be of 24 IEEE

802.11n OFDM symbols in duration. Of those 24 IEEE 802.11n OFDM symbols, 13 symbols, or approximately 54% of the total, may comprise data, 5 symbols, or approximately 21% of the total, may comprise legacy preamble, and 6 symbols, or approximately 25% of the total, may comprise high throughput preamble. Incorporation of a greenfield access mode in the TGnsync proposal may enable the removal of the 5 symbols of legacy preamble from the PPDU. This may result in an approximately 21% increase in efficiency. In turn, the efficiency increase from the adoption of a greenfield access mode may enable the coding rate to be reduced from ¾ to 2/3 or less. A consequence of the coding rate reduction may enable the same throughput to be maintained as in the TGnsync mixed mode proposal where the greenfield access mode would also be able to maintain an equivalent packet error rate at an signal to noise ratio that may be at least dB lower than that achievable in mixed mode. This may be referred to as a > 2 dB performance gain for greenfield access relative to mixed mode access. This amount of gain may be greater than that which may be realized in utilizing LDPC codes. LDPC may be proposed for inclusion in IEEE 802.11n. Simulation results may show that LDPC provides a performance gain of 2 dB relative to BCC utilized specified in IEEE 802.11a and in IEEE 802.11g. The use of LDPC codes may, however, add significant complexity in the receiver 101.

[56] FIG. 4a shows exemplary training sequences and headers for greenfield access in accordance with a WWiSE proposal for N_{SS}=2, in accordance with an embodiment of the invention. With reference to FIG. 4a, there is shown a training sequence and header for spatial stream 1 402, and a training sequence and header for spatial stream 2 412. The training sequence and header 402 may comprise a HT short training sequence for spatial stream 1 (HT-ST_1) 404, a HT long training sequence for spatial stream 1 (HT-LT_1) 406, and a Signal-N field for spatial stream 1 (Signal-N_1) 408. The training sequence and header 412 may comprise a HT short training sequence for spatial stream 2 (HT-ST_2) 414, a HT long training sequence for spatial stream 2 (HT-LT_2) 416, and a Signal-N field for spatial stream 2 (Signal-N_2) 418.

[57] FIG. 4b shows an exemplary Signal-N header field for greenfield access in accordance with a WWiSE proposal, in accordance with an embodiment of the invention. With reference to FIG. 4b, there is shown a Signal-N header 452. The Signal-N header field may comprise a reserved field 454, a number of spatial streams (NSS) field 456, a number of transmit antennas (NTX) field 458, a BW field 460, a coding rate (R) field 462, an error correcting code type (CT) field 464, a constellation type (CON) field 466, a length field 468, a last PSDU indicator (LPI) field 470, a reserved field 472, a CRC field 474, and a tail field 476. The reserved field 454 may comprise 6 bits of binary information. The NSS field 456 may comprise 3 bits of binary information. The NTX field 458 may comprise 3 bits of binary information. The BW field 460 may comprise 2 bits of binary information. The R field 462 may comprise 3 bits of binary information. The CT field 464 may comprise 2 bits of binary information. The CON field 466 may comprise 3 bits of binary information. The length field 468 may comprise 13 bits of binary information. The LPI field 470 may comprise 1 bit of binary information. The reserved field 472 may comprise 8 bits of binary information. The CRC field 474 may comprise 4 bits of binary information. The tail field 476 may comprise 6 bits of binary information.

[58] FIG. 4c shows exemplary training sequences and headers for greenfield access in accordance with a WWiSE proposal for N_{SS}=4, in accordance with an embodiment of the invention. With reference to FIG. 4c, there is shown a training sequence and header for spatial stream 1 403, a training sequence and header for spatial stream 2 413, a training sequence and header for spatial stream 3 422, and a training sequence and header for spatial stream 4 432. The training sequence and header 403 may comprise HT-ST_1 405, a first HT long training sequence for spatial stream 1 (HT-$LT_{1,1}$) 407, a Signal-N_1 field 408, and a second HT long training sequence for spatial stream 1 (HT-$LT_{1,2}$) 410. The training sequence and header 413 may comprise HT-ST_2 415, a first HT long training sequence for spatial stream 2 (HT-$LT_{2,1}$) 417, a Signal-N_2 field 418, and a HT-$LT_{2,2}$ 420. The training sequence and header 422 may comprise HT-ST_3 424, a HT-$LT_{3,1}$ 426, a Signal-N_3 field 428, and a HT-$LT_{3,2}$ 430. The training sequence and

header 432 may comprise HT-ST_4 434, a HT-$LT_{4,1}$ 436, a Signal-N_4 field 438, and a HT-$LT_{4,2}$ 440.

[59] Each of the HT-ST fields 404, 405, 414, 415, 424, and 434 may be of 8 μs in duration, or equivalent in time duration to 2 IEEE 802.11n OFDM symbols. Each of the HT-LT fields 406, 407, 410, 416, 417, 420, 426, 430, 436, and 440 may be 8 μs, or equivalent in time duration to 2 IEEE 802.11n OFDM symbols. Each of the Signal-N fields 408, 418, 428, and 438 may be of 4 μs in duration, or equivalent in time duration to 1 IEEE 802.11n OFDM symbol.

[60] Comparing FIG. 4a and FIG. 4c, the training sequences and Signal-N header in FIG. 4a, for 2 streams, 402 and 412, may be of 20 μs in duration, or equivalent to 5 IEEE 802.11n OFDM symbols, while the training sequences and header in FIG. 4c for 4 streams, 403, 413, 422, and 432 may be of 28 μs in duration, or equivalent in time duration to 7 IEEE 802.11n OFDM symbols.

[61] FIG. 5 shows exemplary training sequences and headers for greenfield access for $N_{NSS}>2$, in accordance with an embodiment of the invention. With reference to FIG. 5 there is shown a training sequence and header for spatial stream 1 502, a training sequence and header for spatial stream 2 522, and a training sequence and header for spatial stream N_{SS} 542. The training sequence and header 502 may comprise an HT-STF_1 field 504, an HT-$LTF_{1,1}$ field 506, a plurality of HT-$LTF_{1,2}$...HT-$LTF_{1,N}$ fields 508...510, and a Signal*-N_1 field 512. The training sequence and header 522 may comprise an HT-STF_2 field 524, an HT-$LTF_{2,1}$ field 526, a plurality of HT-$LTF_{2,2}$...HT-$LTF_{2,N}$ fields 528...530, and a Signal*-N_2 field 532. The training sequence and header 542 may comprise an HT-STF_{NSS} field 544, an HT-$LTF_{NSS,1}$ field 546, a plurality of HT-$LTF_{NSS,2}$...HT-$LTF_{NSS,N}$ fields 548...550, and a Signal*-N_{NSS} field 552. The Signal*-N fields 512, 532, and 552 may be as shown in FIG. 3c.

[62] Each of the HT-STF fields 504, 524, and 544 may be of 8 μs in duration, or equivalent in time duration to 2 IEEE 802.11n OFDM symbols. Each of the HT-LTF fields 506, 526, and 546 may be 8 μs, or equivalent in time duration to 2 IEEE 802.11n

OFDM symbols. Each of the HT-LTF fields 508...510, 528...530, 548...550 may be 4 μs, or equivalent in time duration to 1 IEEE 802.11n OFDM symbol. Each of the Signal-N fields 512, 532, and 552 may be of 8 μs in duration, or equivalent in time duration to 2 IEEE 802.11n OFDM symbols.

[63] Reviewing FIG. 5, the training sequences and Signal*-N header 502, 522, and 542, for 2 spatial streams may be of 28 μs in duration, or equivalent to 7 IEEE 802.11n OFDM symbols, while the training sequences and header 502, 522, and 542 for 3 spatial streams may be of 32 μs in duration, or equivalent in time duration to 8 IEEE 802.11n OFDM symbols, and the training sequences and header 502, 522, and 542 for 4 spatial streams may be of 36 μs in duration, or equivalent in time duration to 9 IEEE 802.11n OFDM symbols.

[64] Comparing FIG. 3a to FIG. 5 may indicate that the training sequences and headers 502, 522, and 542 may be 16 μs shorter in duration than the training sequences and headers 302, 322, and 342. This may be a reduction of 4 IEEE 802.11n OFDM symbols being required to be transmitted with each PPDU. Furthermore, the embodiment of the invention as shown in FIG. 5 may utilize a Signal*-N field that is based on a TGnsync proposal. Each of the HT-LTF fields 506, 526, and 546, may transmit 2 identical symbols for fine frequency offset estimation as may be specified in IEEE resolutions 802.11a, and 802.11g. The receiver 101 (FIG. 1) may need to distinguish the start of the Signal-N field. The sequence of LT fields for different streams may be orthogonal such that the vector defined by each LT sequence may be orthonormal to the other LT sequences. This may obviate tone interleaving, which may be desirable because the first LT field may utilize 2 identical symbols.

[65] The LT fields may be defined for $N_{SS}=2$ as follows:

$HT\text{-}LTF_{1,1}$ = .11a LT

$HT\text{-}LTF_{1,2}$ = .11a LT

$HT\text{-}LTF_{2,1} = -1 \times (.11a\ LT \times e^{j\theta(k)})$

$HT\text{-}LTF_{2,2} = .11a\ LT \times e^{jtheta(k)}$

where .11a LT indicates that the training sequence may be based on specifications in IEEE 802.11a, theta(k) indicates a phase shift in the LT field for OFDM subcarrier k where the phase shift varies as a function of k.

[66] The LT fields may be defined for N_{SS}=3 as follows:

$HT\text{-}LTF_{1,1} = .11a\ LT \times W_{11}$

$HT\text{-}LTF_{1,2} = .11a\ LT \times W_{12}$

$HT\text{-}LTF_{1,3} = .11a\ LT \times W_{13}$

$HT\text{-}LTF_{2,1} = .11a\ LT \times W_{21} \times e^{jtheta(k)}$

$HT\text{-}LTF_{2,2} = .11a\ LT \times W_{22} \times e^{jtheta(k)}$

$HT\text{-}LTF_{2,3} = .11a\ LT \times W_{23} \times e^{jtheta(k)}$

$HT\text{-}LTF_{3,1} = .11a\ LT \times W_{31} \times e^{jphi(k)}$

$HT\text{-}LTF_{3,2} = .11a\ LT \times W_{32} \times e^{jphi(k)}$

$HT\text{-}LTF_{3,3} = .11a\ LT \times W_{33} \times e^{jphi(k)}$

where W_{mn} are elements from a discrete Fourier transform (DFT) matrix, and phi(k) indicates a phase shift in the LT field for OFDM subcarrier k where the phase shift varies as a function of k where phi(k) may not equal theta(k).

[67] The LT fields may be defined for N_{SS}=4 as follows:

$HT\text{-}LTF_{1,1} = -1 \times .11a\ LT$

$HT\text{-}LTF_{1,2} = .11a\ LT$

$HT\text{-}LTF_{1,3} = .11a\ LT$

$HT\text{-}LTF_{1,4} = .11a\ LT$

$HT\text{-}LTF_{2,1} = .11a\ LT \times e^{jtheta(k)}$

$HT\text{-}LTF_{2,2} = -1 \times .11a\ LT \times e^{jtheta(k)}$

$HT\text{-}LTF_{2,3} = .11a\ LT \times e^{jtheta(k)}$

$HT\text{-}LTF_{2,4} = .11a\ LT \times e^{jtheta(k)}$

$HT\text{-}LTF_{3,1} = .11a\ LT \times e^{jphi(k)}$

$HT\text{-}LTF_{3,2} = .11a\ LT \times e^{jphi(k)}$

$HT\text{-}LTF_{3,3} = -1 \times .11a\ LT \times e^{jphi(k)}$

$HT\text{-}LTF_{3,4} = .11a\ LT \times e^{jphi(k)}$

$HT\text{-}LTF_{4,1} = .11a\ LT \times e^{jpsi(k)}$

$HT\text{-}LTF_{4,2} = .11a\ LT \times e^{jpsi(k)}$

$HT\text{-}LTF_{4,3} = .11a\ LT \times e^{jpdi(k)}$

$HT\text{-}LTF_{4,4} = -1 \times .11a\ LT \times e^{jpsi(k)}$

where psi(k) indicates a phase shift in the LT field for OFDM subcarrier k where the phase shift varies as a function of k.

[68] FIG. 6 shows exemplary training sequences and headers for mixed mode access for $N_{NSS}>2$, in accordance with an embodiment of the invention. With reference to FIG. 6 there is shown that the HT-STF fields 612, 632, and 652 may be 3.2 μs in duration, and the HT-LTF fields 614...616, 634...636, and 654...656 may be 4 μs in duration. The 3.2 μs time duration of the HT-STF fields 612, 632, and 652 may represent an 800ns increase in time duration relative to the 2.4 μs for the HT-STF fields 312, 332, and 352. The 800 ns increase in time duration may allow more time for automatic gain control settling in adapting transmission of signals to beamforming.

[69] Comparing FIG. 3a to FIG. 6 may indicate that the training sequences and headers 602, 622, and 642 may be 5.6 μs shorter in duration than the training sequences and headers 302, 322, and 342 for 2 spatial streams.

[70] Accordingly, the present invention may be realized in hardware, software, or a combination of hardware and software. The present invention may be realized in a centralized fashion in at least one computer system, or in a distributed fashion where different elements are spread across several interconnected computer systems. Any kind of computer system or other apparatus adapted for carrying out the methods described herein is suited. A typical combination of hardware and software may be a general-purpose computer system with a computer program that, when being loaded and executed, controls the computer system such that it carries out the methods described herein.

[71] The present invention may also be embedded in a computer program product, which comprises all the features enabling the implementation of the methods described herein, and which when loaded in a computer system is able to carry out these methods. Computer program in the present context means any expression, in any language, code or notation, of a set of instructions intended to cause a system having an information processing capability to perform a particular function either directly or after either or both of the following: a) conversion to another language, code or notation; b) reproduction in a different material form.

[72] While the present invention has been described with reference to certain embodiments, it will be understood by those skilled in the art that various changes may be made and equivalents may be substituted without departing from the scope of the present invention. In addition, many modifications may be made to adapt a particular situation or material to the teachings of the present invention without departing from its scope. Therefore, it is intended that the present invention not be limited to the particular embodiment disclosed, but that the present invention will include all embodiments falling within the scope of the appended claims.

CLAIMS

What is claimed is:

1. A method is provided, substantially as shown and described with respect to at least one of FIGs. 1-6, for compromise greenfield preambles for 802.11n, which utilizes a channel sounding mechanism to communicate information between a transmitter and a receiver.

2. A machine-readable storage having stored thereon, a computer program having at least one code section for compromise greenfield preambles for 802.11n, the at least one code section being executable by a machine for causing the machine to perform steps comprising those substantially as shown and described with respect to at least one of FIGs. 1-6.

3. A system is provided, substantially as shown and described with respect to at least one of FIGs. 1-6, compromise greenfield preambles for 802.11n, which utilizes a channel sounding mechanism to communicate information between a transmitter and a receiver.

ABSTRACT

[73] Certain embodiments of the invention may be found in a method and system for compromise greenfield preambles for 802.11n.

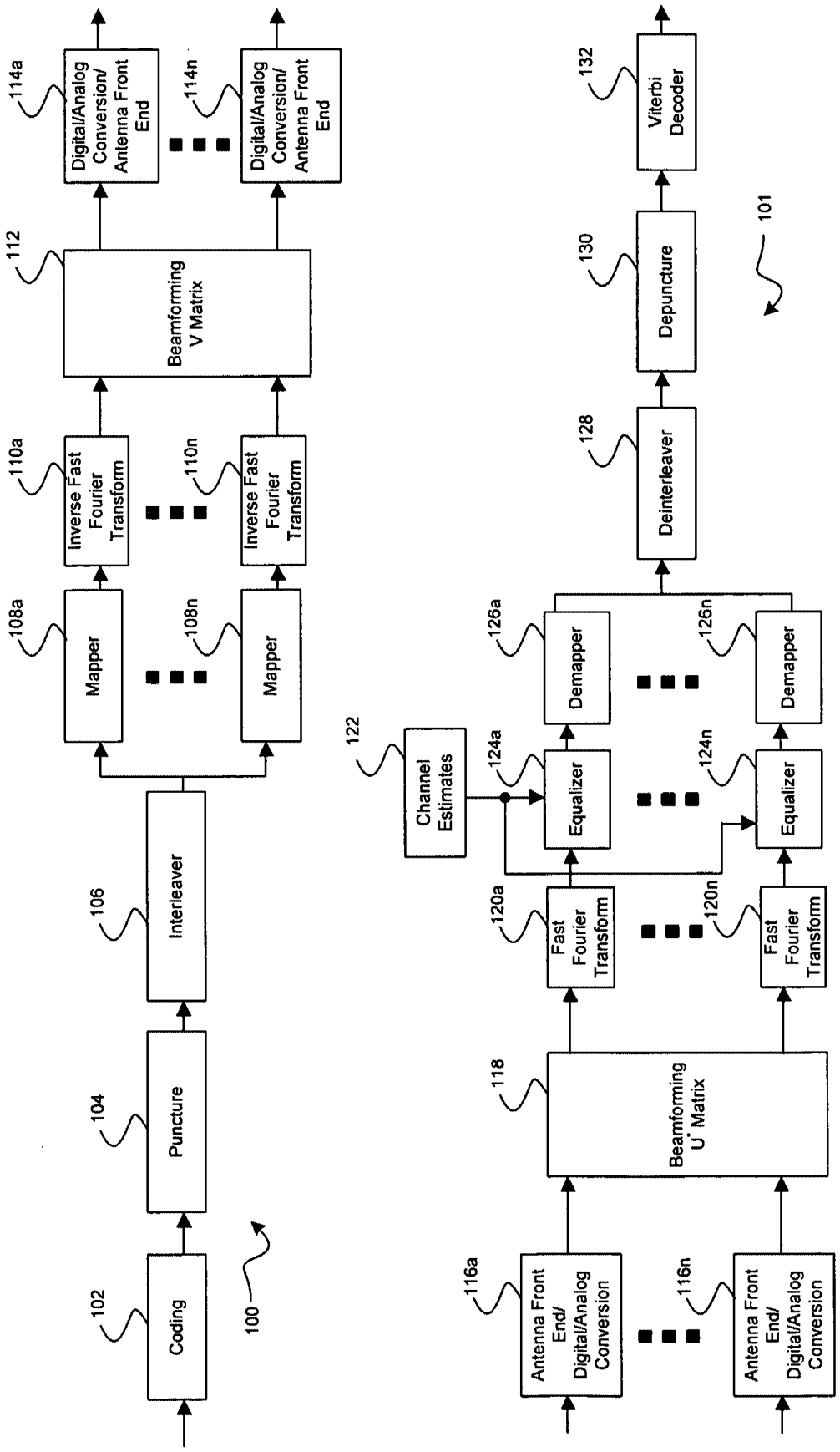
100
101
102
Coding
104
Puncture
106
Interleaver
108a
Mapper
108n
Mapper
110a
Inverse Fast Fourier Transform
110n
Inverse Fast Fourier Transform
112
Beamforming V Matrix
114a
Digital/Analog Conversion/ Antenna Front End
114n
Digital/Analog Conversion/ Antenna Front End
116a
Antenna Front End/ Digital/Analog Conversion
116n
Antenna Front End/ Digital/Analog Conversion
118
Beamforming U* Matrix
120a
Fast Fourier Transform
120n
Fast Fourier Transform
122
Channel Estimates
124a
Equalizer
124n
Equalizer
126a
Demapper
126n
Demapper
128
Deinterleaver
130
Depuncture
132
Viterbi Decoder

FIG. 1

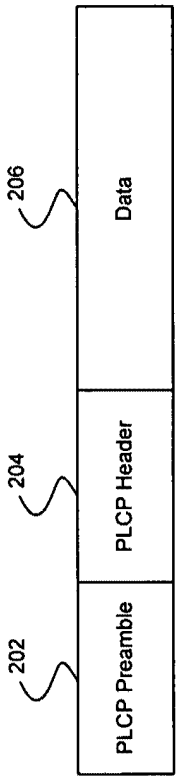
202
PLCP Preamble
204
PLCP Header
206
Data

FIG. 2a

252
PSDU
254
Tail
256
Pad

FIG. 2b

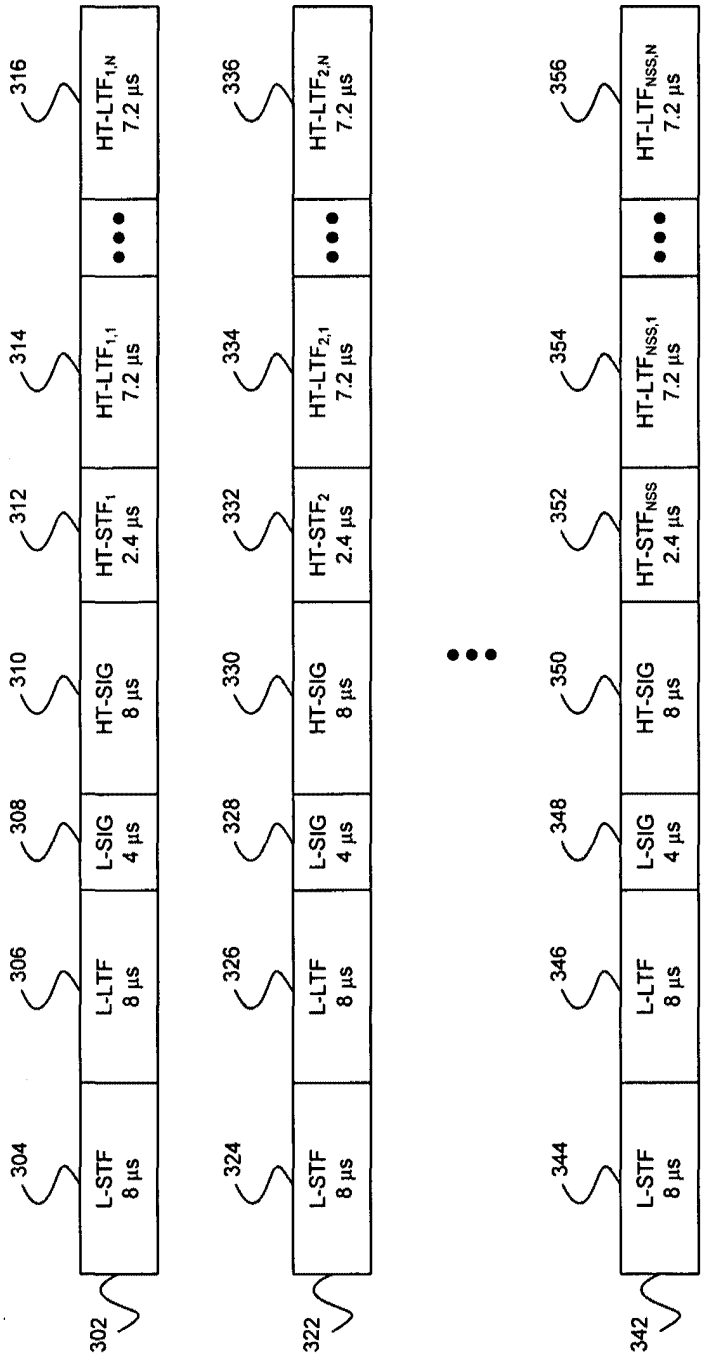
302
304
L-STF
8 µs
306
L-LTF
8 µs
308
L-SIG
4 µs
310
HT-SIG
8 µs
312
HT-STF1
2.4 µs
314
HT-LTF1,1
7.2 µs
316
HT-LTF1,N
7.2 µs
322
324
L-STF
8 µs
326
L-LTF
8 µs
328
L-SIG
4 µs
330
HT-SIG
8 µs
332
HT-STF2
2.4 µs
334
HT-LTF2,1
7.2 µs
336
HT-LTF2,N
7.2 µs
342
344
L-STF
8 µs
346
L-LTF
8 µs
348
L-SIG
4 µs
350
HT-SIG
8 µs
352
HT-STFNSS
2.4 µs
354
HT-LTFNSS,1
7.2 µs
356
HT-LTFNSS,N
7.2 µs

FIG. 3a

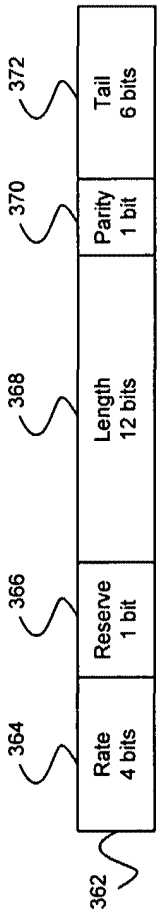
362
364
Rate
4 bits
366
Reserve
1 bit
368
Length
12 bits
370
Parity
1 bit
372
Tail
6 bits

FIG. 3b

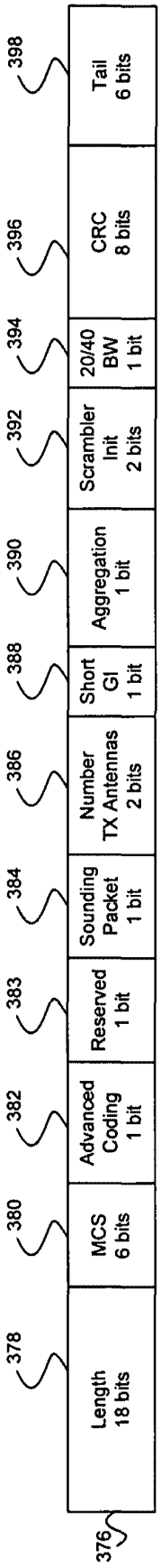
376
378
Length
18 bits
380
MCS
6 bits
382
Advanced
Coding
1 bit
383
Reserved
1 bit
384
Sounding
Packet
1 bit
386
Number
TX Antennas
2 bits
388
Short
GI
1 bit
390
Aggregation
1 bit
392
Scrambler
Init
2 bits
394
20/40
BW
1 bit
396
CRC
8 bits
398
Tail
6 bits

FIG. 3c

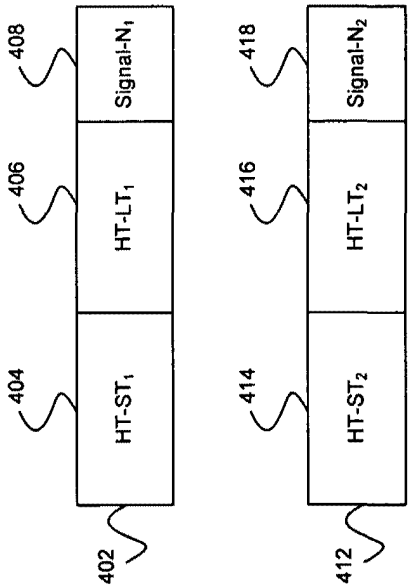
402
404
HT-ST1
406
HT-LT1
408
Signal-N1
412
414
HT-ST2
416
HT-LT2
418
Signal-N2

FIG. 4a

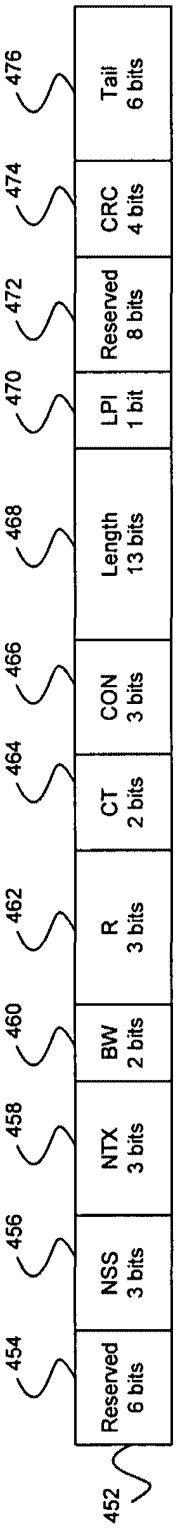
452
454
Reserved 6 bits
456
NSS 3 bits
458
NTX 3 bits
460
BW 2 bits
462
R 3 bits
464
CT 2 bits
466
CON 3 bits
468
Length 13 bits
470
LPI 1 bit
472
Reserved 8 bits
474
CRC 4 bits
476
Tail 6 bits

FIG. 4b

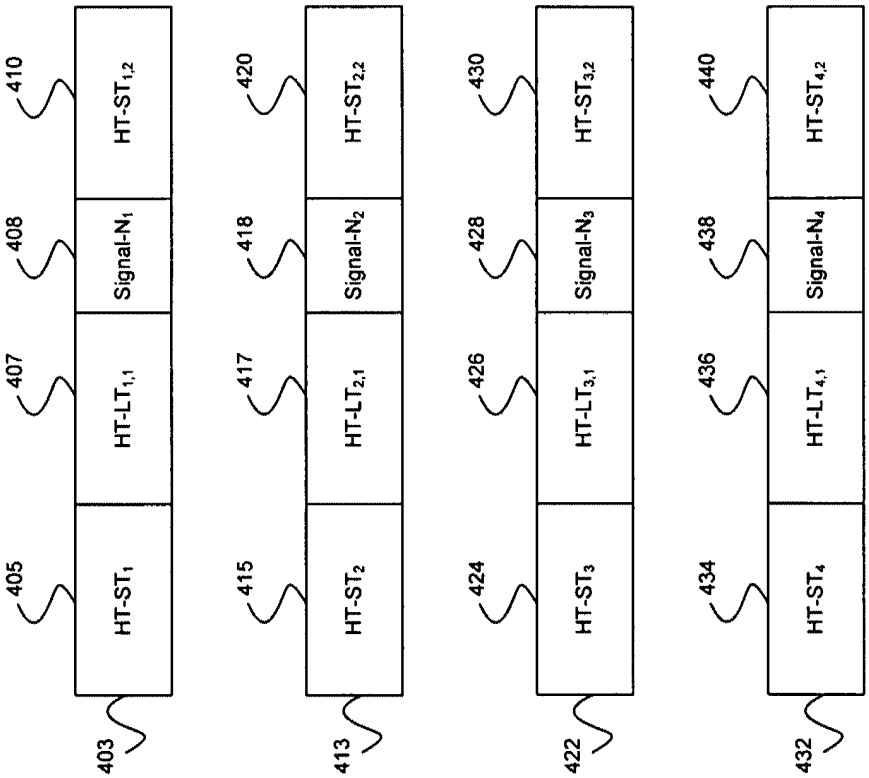
403
405
HT-ST1
407
HT-LT1,1
408
Signal-N1
410
HT-ST1,2
413
415
HT-ST2
417
HT-LT2,1
418
Signal-N2
420
HT-ST2,2
422
424
HT-ST3
426
HT-LT3,1
428
Signal-N3
430
HT-ST3,2
432
434
HT-ST4
436
HT-LT4,1
438
Signal-N4
440
HT-ST4,2

FIG. 4c

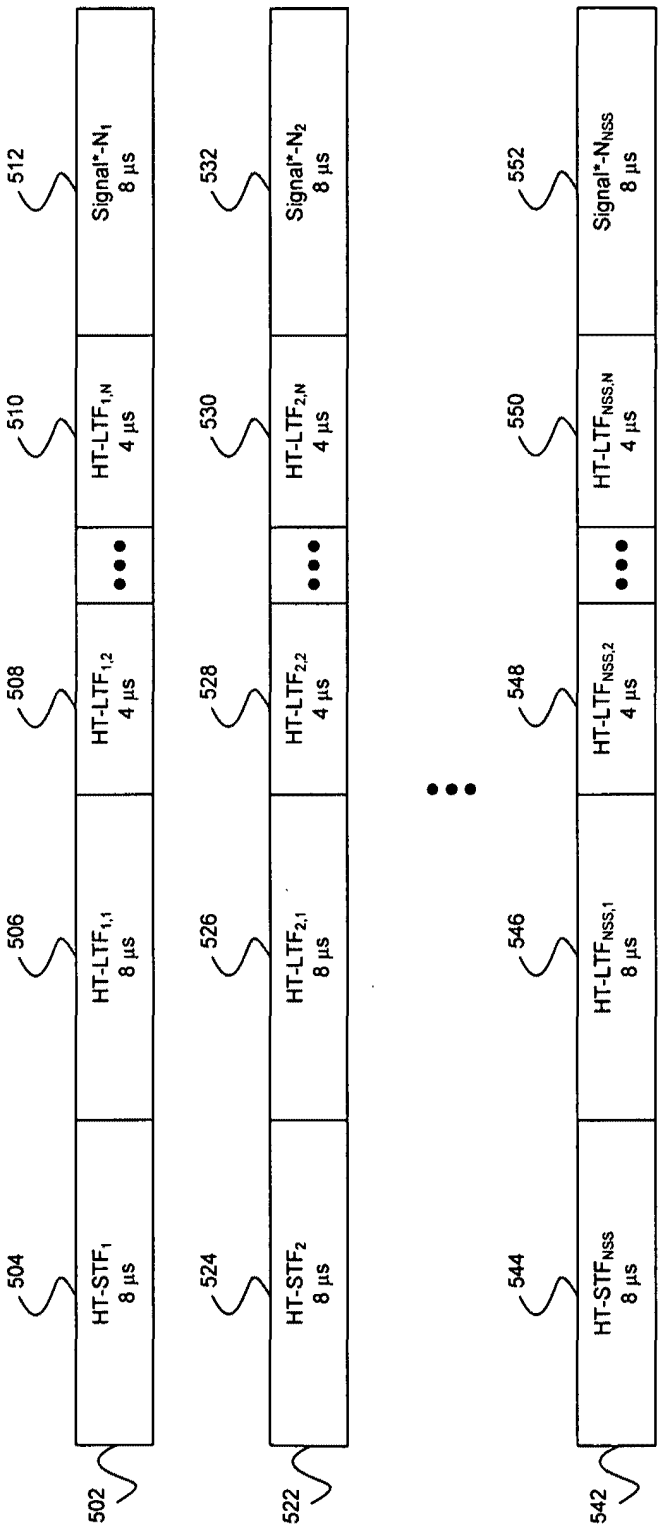
502
504
HT-STF1
8 µs
506
HT-LTF1,1
8 µs
508
HT-LTF1,2
4 µs
510
HT-LTF1,N
4 µs
512
Signal*-N1
8 µs
522
524
HT-STF2
8 µs
526
HT-LTF2,1
8 µs
528
HT-LTF2,2
4 µs
530
HT-LTF2,N
4 µs
532
Signal*-N2
8 µs
542
544
HT-STFNSS
8 µs
546
HT-LTFNSS,1
8 µs
548
HT-LTFNSS,2
4 µs
550
HT-LTFNSS,N
4 µs
552
Signal*-NNSS
8 µs

FIG. 5

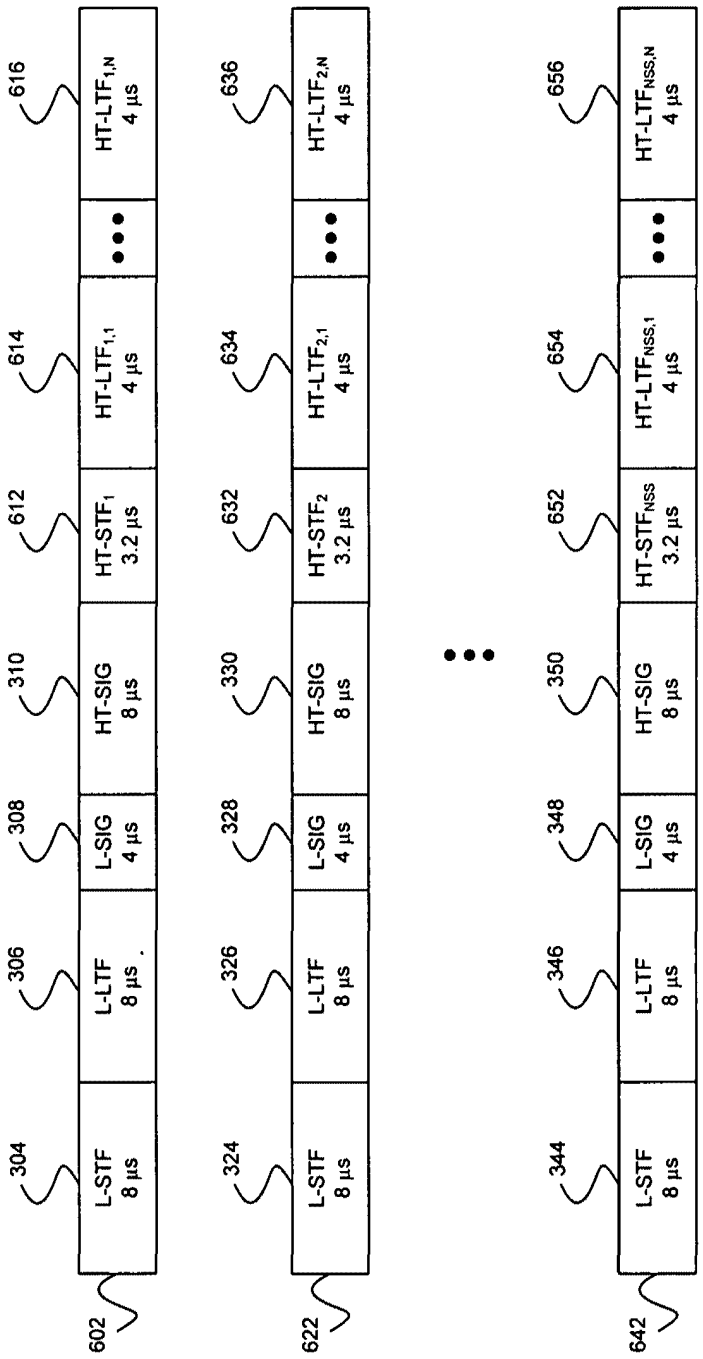
602
304
L-STF
8 µs
306
L-LTF
8 µs
308
L-SIG
4 µs
310
HT-SIG
8 µs
612
HT-STF1
3.2 µs
614
HT-LTF1,1
4 µs
616
HT-LTF1,N
4 µs
622
324
L-STF
8 µs
326
L-LTF
8 µs
328
L-SIG
4 µs
330
HT-SIG
8 µs
632
HT-STF2
3.2 µs
634
HT-LTF2,1
4 µs
636
HT-LTF2,N
4 µs
642
344
L-STF
8 µs
346
L-LTF
8 µs
348
L-SIG
4 µs
350
HT-SIG
8 µs
652
HT-STFNSS
3.2 µs
654
HT-LTFNSS,1
4 µs
656
HT-LTFNSS,N
4 µs

FIG. 6

PATENT APPLICATION SERIAL NO. _____

U.S. DEPARTMENT OF COMMERCE
PATENT AND TRADEMARK OFFICE
FEE RECORD SHEET

02/18/2005 NNGUYEN1 00000066 60653429

01 FC:1005 200.00 OP

PTO-1556
(5/87)

*U.S. Government Printing Office: 2002 — 489-267/69033

BEST AVAILABLE COPY