Filed on behalf of: AX Wireless, LLC

Entered: November 17, 2023

UNITED STATES PATENT AND TRADEMARK OFFICE

BEFORE THE PATENT TRIAL AND APPEAL BOARD

INTEL CORPORATION,
Petitioner,

v.

AX WIRELESS,
Patent Owner.

Case IPR2023-01143
Patent 9,584,262

PATENT OWNER'S
PRELIMINARY RESPONSE

TABLE OF CONTENTS

I. Introduction 1

II. Background 1

A. The '262 Patent (INTEL-1001) 1

B. Person of Ordinary Skill in the Art 2

III. Ground 1 Of Intel's Petition Fails Because July 2005 WWiSE (INTEL-1005) Was Not a Prior-Art Printed Publication 3

IV. The Claims Would Not Have Been Obvious Over Hansen in View of July 2005 WWiSE (Ground 1) 11

A. Overview of the Art and the Combination 13

1. Hansen (INTEL-1006) 13

2. July 2005 WWiSE (INTEL-1005) 17

3. Intel's Hansen and July 2005 WWiSE Combinations 19

B. Intel Fails To Show Any Motivation To Implement July 2005 WWiSE's PPDUs Using Hansen's Transceiver 22

1. Intel Ignores the Range Capabilities of Hansen and the Differences in Range Capabilities Between Hansen and July 2005 WWiSE 23

2. Intel Cherry-Picks One Feature Out of July 2005 WWiSE While Failing to Consider the Prior Art References for All Their Teachings 31

3. Intel Fails to Provide any Rational Reasons to Combine Hansen with July 2005 WWiSE as in the Petition 36

V. Ground 2 Fails Because Zhang (INTEL-1017) Is Not Prior Art 47

1. Element 1[A]: preamble's first field 48

2. Element 1[B]: preamble decodable under third protocol 54

3. Element 1[C]: determining data unit conforms to first protocol 54

4. Element 1[D]: data conforms to first protocol and not the second or third.....56

VI. The Board Should Exercise Discretion to Deny Institution Under 35 U.S.C. § 314 and *Fintiv* 56

A. Factor 1 (Stay) Favors Denial 57

B. Factor 2 (Trial Date Proximity) Strongly Favors Denial 57

C. Factor 3 (Investment) Strongly Favors Denial.....59

D. Factor 4 (Overlap) Undisputedly and Strongly Favors Denial 60

E. Factor 5 Undisputedly Favors Denial 61

F. Factor 6 (Other) Favors Denial 61

VII. Conclusion 63

TABLE OF AUTHORITIES

Page(s)

CASES

Acceleration Bay, LLC v. Activision Blizzard Inc.,
908 F.3d 765 (Fed. Cir. 2018) 3, 4, 8, 9

Amgen Inc. v. Sanofi,
872 F.3d 1367 (Fed. Cir. 2017) 48

In re Anova Hearing Labs, Inc.,
809 F. App'x 840 (Fed. Cir. 2020) 30

Apple Inc. v. Fintiv, Inc.,
IPR2020-00019, Paper 11 (Mar. 20, 2020) 57, 60, 62

Chemours Co. FC, LLC v. Daikin Indus., Ltd.,
4 F.4th 1370 (Fed. Cir. 2021) 31

CommScope Techs. LLC v. Dali Wireless, Inc.,
IPR2022-01242, Paper 23 (Feb. 27, 2023) 62

Cook Grp. Inc. v. Boston Sci. Scimed, Inc.,
809 F. App'x 990 (Fed. Cir. 2020) 44

In re Cronyn,
890 F.2d 1158 (Fed. Cir. 1989) 8

In re Dembiczak,
175 F.3d 994 (Fed. Cir. 1999) 11

Dynamic Drinkware, LLC v. Nat'l Graphics, Inc.,
800 F.3d 1375 (Fed. Cir. 2015) 47, 48

Flash-Control, LLC v. Intel Corp.,
No. 2020-2141, 2021 WL 2944592 (Fed. Cir. July 14, 2021) 53, 55

Forescout Techs., Inc. v. Fortinet, Inc.,
IPR2021-01328, Paper 12 (Jan. 27, 2022).....48

Harmonic Inc. v. Avid Tech., Inc.,
815 F.3d 1356 (Fed. Cir. 2016) 7, 30, 36, 45

Henny Penny Corp. v. Frymaster LLC,
938 F.3d 1324 (Fed. Cir. 2019) 34

Kinetic Concepts, Inc. v. Smith & Nephew, Inc.,
688 F.3d 1342 (Fed. Cir. 2012) 36, 42

Koninklijke KPN N.V. v. Telefonaktiebolaget LM Ericsson,
No. 2:21-CV-00113-JRG (E.D. Tex. July 7, 2022).....57

In re Lister,
583 F.3d 1307 (Fed. Cir. 2009) 8

Lockwood v. Am. Airlines, Inc.,
107 F.3d 1565 (Fed. Cir. 1997) 49

MyPort, Inc. v. Samsung Elecs. Co.,
No. 2:22-CV-00114-JRG (E.D. Tex. June 13, 2023).....57

Novozymes A/S v. DuPont Nutrition Bioscis. APS,
723 F.3d 1336 (Fed. Cir. 2013) 53, 55

Provisur Techs., Inc. v. Weber, Inc.,
No. 2021-1851, 2022 WL 17688071 (Fed. Cir. Dec. 15, 2022) 34

Rovalma, S.A. v. Bohler-Edelstahl GmbH & Co. KG,
856 F.3d 1019 (Fed. Cir. 2017) 40

Samsung Elecs. Co. v. Infobridge Pte. Ltd.,
929 F.3d 1363 (Fed. Cir. 2019) .....*passim*

Smartmatic USA Corp. v. Election Sys. & Software, LLC,
IPR2019-00527, Paper 32 (Aug. 5, 2020).....30, 37, 45

South-Tek Sys., LLC v. Eng'd Corrosion Sols., LLC,
748 F. App'x 1003 (Fed. Cir. 2018).....30

SRI Int'l, Inc. v. Internet Sec. Sys., Inc.,
511 F.3d 1186 (Fed. Cir. 2008) 4, 5, 6, 10

St. Jude Med., LLC v. Snyders Heart Valve LLC,
977 F.3d 1232 (Fed. Cir. 2020) 41, 47

Teleflex, Inc. v. Ficosa N. Am. Corp.,
299 F.3d 1313 (Fed. Cir. 2002) 36

TQ Delta, LLC v. Cisco Sys., Inc.,
942 F.3d 1352 (Fed. Cir. 2019) 11, 22, 24

Trivascular, Inc. v. Samuels,
812 F.3d 1056 (Fed. Cir. 2016) 31

Zhuhai Cosmx Battery Co. v. Ningde Amperex Tech. Ltd.,
IPR2023-00587, Paper 12 (Sept. 22, 2023).....58

STATUTES

35 U.S.C. § 314.....56, 57, 62

Exhibit List

Exhibit	Description
2001	Declaration of Zygmunt Haas, Ph.D. ("Haas" or "AXW-2001")
2002	*Curriculum Vitae* of Zygmunt Haas, Ph.D. ("AXW-2002")
2003	Institute of Electrical & Electronics Engineers ("IEEE"), *IEEE Standards Association – Documents 802.11* (Oct. 10, 2023), https://mentor.ieee.org/802.11/documents (excerpted) ("AXW-2003")
2004	IEEE, *IEEE Standards Association – Documents 802.11: Working Group* (Oct. 8, 2023), https://mentor.ieee.org/802.11/documents?is_dcn=DCN%2C%20Title%2C%20Author%20or%20Affiliation&is_group=0000 (screenshot excerpts) ("AXW-2004")
2005	IEEE, *IEEE Standards Association – Documents 802.11: TGn Working Group (inactive)* (Sept. 20, 2023), https://mentor.ieee.org/802.11/documents?is_group=000n (excerpted) ("AXW-2005")
2006	IEEE 802.11 Working Group of the 802 Committee, *IEEE P802.11n™/D1.0, Draft Amendment to STANDARD [FOR] Information Technology-Telecommunications and information exchange between systems-Local and Metropolitan networks-Specific requirements-Part 11: Wireless LAN Medium Access Control (MAC) and Physical Layer (PHY) specifications: Enhancements for Higher Throughput* (Mar. 2006) ("AXW-2006")
2007	IEEE, *IEEE Standards Association – Documents 802.11 (no search terms)* (Sept. 22, 2023), https://mentor.ieee.org/802.11/documents ("AXW-2007")
2008	IEEE, *IEEE Standards Association – Documents 802.11 (all groups; extended range activity)* (Sept. 20, 2023), https://mentor.ieee.org/802.11/documents?is_dcn=extended range ("AXW-2008")

Exhibit	Description
2009	IEEE, *IEEE Standards Association – Documents 802.11: TGn Working Group (inactive; range search)* (Sept. 20, 2023), https://mentor.ieee.org/802.11/documents?is_dcn=range&is_group=000n ("AXW-2009")
2010	IEEE, *IEEE Standards Association – Documents 802.11: TGn Working Group (inactive; extended range activity)* (Sept. 20, 2023), https://mentor.ieee.org/802.11/documents?is_dcn=extend&is_group=000n ("AXW-2010")
2011	IEEE, *IEEE Standards Association – Documents 802.11 (all groups; extended and range search activity)* (Oct. 9, 2023), https://mentor.ieee.org/802.11/documents?is_dcn=extended AND range ("AXW-2011")
2012	IEEE, *IEEE Standards Association – Documents 802.11 (all groups; range search activity)* (Oct. 10, 2023), https://mentor.ieee.org/802.11/documents?is_dcn=range (excerpted) ("AXW-2012")
2013	Bruce Kraemer & Adrian Stephens, *TGn Proposed Draft Revision Notice* (Doc. No. IEEE 802.11-06/1061r0) (July 18, 2006), https://view.officeapps.live.com/op/view.aspx?src=https%3A%2F%2Fmentor.ieee.org%2F802.11%2Fdcn%2F06%2F11-06-1060-00-000n-tgn-draft-revision-with-additions-and-deletions.ppt&wdOrigin=BROWSELINK ("AXW-2013")
2014	Gérald Chouinard, *Bringing broadband access to rural and remote areas: The Canadian Experience*, ITU NEWS (commem. ed. 3) (Apr. 2006) ("AXW-2014" or "ITU News")
2015	Matthew S. Gast, *802.11 Wireless Networks: The Definitive Guide* (2d ed. 2005) ("AXW-2015" or "Gast")

Exhibit	Description
2016	Syed Aon Mujtaba, *TGn Sync Response to Questions* (Doc. No. IEEE 802.11-05/182r2) (Mar. 16, 2005), https://view.officeapps.live.com/op/view.aspx?src=https%3A%2F%2Fmentor.ieee.org%2F802.11%2Fdcn%2F05%2F11-05-0182-02-000n-tgnsync-response-to-atlanta-questions.ppt&wdOrigin=BROWSELINK ("AXW-2016")
2017	Third Amended Docket Control Order, *AX Wireless LLC v. Dell Inc.*, No. 2:22-cv-00277 (E.D. Tex. Oct. 23, 2023), ECF No. 136 ("AXW-2017")
2018	Third Amended Docket Control Order, *AX Wireless LLC v. Lenovo Grp. Ltd.*, No. 2:22-cv-00280 (E.D. Tex. Oct. 31, 2023), ECF No. 130 ("AXW-2018")
2019	RESERVED
2020	*Time to Milestones – Judge Robert W. Schroeder, III: Case Filing Date: On or After Jan. 1, 2008*, Docket Navigator ("AXW-2020")
2021	Civil Docket, *AX Wireless LLC v. Dell Inc.*, No. 2:22-cv-00277 (E.D. Tex.) (through Nov. 15, 2023) ("AXW-2021")
2022	Civil Docket, *AX Wireless LLC v. Lenovo Grp. Ltd.*, No. 2:22-cv-00280 (E.D. Tex.) (through Nov. 15, 2023) ("AXW-2022")
2023	Defendants' P.R. 3-3 Invalidity Contentions and Ineligibility Contentions, *AX Wireless LLC v. Dell Inc. & HP Inc.*, Nos. 2:22-cv-00277, 2:22-cv-00279 (E.D. Tex. Jan. 23, 2023 [served]) ("AXW-2023")
2024	IEEE Std. 802.11n-2009, *Part 11: Wireless LAN Medium Access Control (MAC) and Physical Layer (PHY) Specifications, Amendment 5: Enhancements for Higher Throughput* (Oct. 29, 2009)

Exhibit	Description
2025	R. Kennedy, *Amendment to IEEE Standard 802.11-2007 (Project No. P802.11af): Standard for Information Technology - Telecommunications and Information Exchange Between Systems - Local and Metropolitan Area Networks - Specific Requirements - Part 11: Wireless LAN Medium Access Control (MAC) and Physical Layer (PHY) Specifications; Amendment: TV White Spaces Operation* (PAR Request Oct. 2, 2009; PAR Approval Dec. 9, 2009) ("AXW-2025")
2026	Bruce Kraemer, *Amendment to IEEE Standard 802.11-2007 (Project No. P802.11ah): Standard for Information Technology - Telecommunications and Information Exchange Between Systems - Local and Metropolitan Area Networks - Specific Requirements - Part 11: Wireless LAN Medium Access Control (MAC) and Physical Layer (PHY) Specifications; Amendment: Sub 1 GHz License-Exempt Operation* (PAR Request July 26, 2010; PAR Approval Sept. 30, 2010) ("AXW-2026")
2027	Xuemei Ouyang et al., *Optimal Antenna Diversity Combining for IEEE 802.11A System*, 48 IEEE TRANSACTIONS CONSUMER ELECS. 738 (Aug. 2002) ("AXW-2027")
2028	Cenk Kose & Bruce Edwards, *WWiSE Proposal: High Throughput Extension to the 802.11 Standard* (Doc. No. IEEE 802.11-04/0886r6) (Jan. 6, 2005), https://www.google.com/url?sa=t&rct=j&q=&esrc=s&source=web&cd=&ved=2ahUKEwjJq5fyur-CAxUROUQIHan7D4IQFnoECBkQAQ&url=https%3A%2F%2Fmentor.ieee.org%2F802.11%2Fdcn%2F05%2F11-05-0149-00-000n-wwise-proposal-high-throughput-extension-to-802-11-standard.doc&usg=AOvVaw2ryBNHlH79Ugg8pE4IzPVE&opi=89978449 ("AXW-2028" or "March 2005 WWiSE Proposal")
2029	Mohammad Hossein Manshaei & Thierry Turletti, *Simulation-Based Performance Analysis of 802.11a Wireless LAN*, PROC. INT'L SYMP. TELECOMMS. 758 (Aug. 2003) ("AXW-2029")

Exhibit	Description
2030	IEEE, *IEEE P802.11 – Task Group N – Meeting Update: Status of Project IEEE 802.11n: Standard for Enhancements for Higher Throughput*, https://www.ieee802.org/11/Reports/tgn_update.htm (printed 11/10/2023) ("AXW-2030")

I. Introduction

Intel's Petition is riddled with errors and should be denied. As to Ground 1, the July 2005 WWiSE reference is not a printed publication because a reasonably diligent POSA searching for its relevant teachings would not have found it. Even assuming public accessibility, Ground 1 still fails. Intel blindly combined July 2005 WWiSE with Hansen, which is based on an entirely different WLAN scheme (TGn Sync), ignoring mountains of evidence that a POSA would have not been motivated to combine these reference. As to Ground 2, primary reference Zhang is not prior art because Intel failed to show that it is entitled to its provisional's filing date.

II. Background

A. The '262 Patent (INTEL-1001)[1]

The '262 patent claims priority from U.S. Provisional Application No. 61/235,909, which was filed on August 21, 2009. Intel does not dispute that it is entitled to this effective filing date.

The '262 patent describes using various header repetition techniques across multiple, overlapping frequency bands in a wireless OFDM network. INTEL-1001, Abstract, claim 1. It explains that "[c]onventional multi-user communications system use frame-based (or packet-based) transmission to communicat[e] between

[1] For consistency, Patent Owner will use Petitioner Intel's exhibit citation format.

two or more users over a shared channel based on Orthogonal Frequency Division Multiplexing (OFDM) …. A packet is usually formed by a preamble, header, and payload, and transmitted using time-sharing or contention-based media access methods." INTEL-1001, 1:26-35. Figure 1 of the '262 patent illustrates "various header repetition schemes" consistent with the teachings of the '262 patent. *Id.* 2:26-34; *see also id.* 5:44-6:7. It further describes various ways of communicating header repetition schemes so that various nodes are aware of the scheme being used. *See, e.g.*, *id.* 2:40-3:55.

The '262 patent emphasizes the importance of frequency diversity, describing nodes are capable of "operating in different portions of frequency bands." *Id.* 2:6-14. When using different header repetition schemes, "frequency diversity is different depending on the bandplan, hence providing different header decodability if D is fixed to 1. If D is fixed to 2, then it increases reliability for the narrowband devices." *Id.* 2:15-20. The '262 patent thus teaches "techniques to accommodate different repetition[] schemes … in a single domain," while "still allow[ing] devices to communicate with one another." *Id.* 2:21-25.

B. Person of Ordinary Skill in the Art

For purposes of this Preliminary Response, Patent Owner does not contest the level of ordinary skill proposed by Intel, but reserves the right to do so. Pet. 8.

III. Ground 1 Of Intel's Petition Fails Because July 2005 WWiSE (INTEL-1005) Was Not a Prior-Art Printed Publication

Intel alleges that July 2005 WWiSE, along with thousands of other such submissions, was "accessible to the public" because it was allegedly available on a now-defunct FTP[2] site ("ftp.wirelessworld.com") via an associated and also now-defunct website, "http://802wirelessworld.com," until mid-2007, and after that, was "available to interested members of the public through Mentor." Pet. 1-3.

Intel failed to meet its burden of demonstrating public accessibility at either website. *Samsung Elecs. Co. v. Infobridge Pte. Ltd.*, 929 F.3d 1363, 1369 (Fed. Cir. 2019). Intel's arguments notwithstanding, it is *not* enough for a document to be posted somewhere on the internet. "'[P]ublic accessibility' requires more than technical accessibility." *Acceleration Bay, LLC v. Activision Blizzard Inc.*, 908 F.3d 765, 773 (Fed. Cir. 2018).[3] The analysis in this case "focuse[s] on whether an interested skilled artisan, using reasonable diligence, would have found [July 2005

---

[2] Unlike websites, FTP (file transfer protocol) sites by themselves allow one to navigate a directory structure, upload or download files, and little else. AXW-2001 ¶69 n.2.

[3] Unless otherwise stated, all emphases herein are added and internal quotation marks, citations, and footnotes are omitted.

WWiSE] on the [alleged] website[s]" and ftp site. *See id*. In *Acceleration Bay*, for example, "although [the reference] was indexed by author and year, it was not *meaningfully* indexed such that an interested artisan exercising reasonable diligence would have found it, which is a proper consideration under [Federal Circuit] precedent." *Id*. at 774 (emphasis in original); *SRI Int'l, Inc. v. Internet Sec. Sys., Inc*., 511 F.3d 1186, 1196-97 (Fed. Cir. 2008) (paper on a public FTP site is not a "printed publication").

To be clear, July 2005 WWiSE was not a published standard, a draft standard, or even a working draft. It was merely one of many thousands of submissions to one of many dozens of working groups addressing the 802.11 standard. AXW-2003 (roughly 89,800 submissions, with roughly 21,700 of them before the relevant 2009 date); AXW-2004 (*over 100* working groups addressed the 802.11 standard). The TGn working group *alone* received approximately 4,600 submissions before the relevant date in 2009. AXW-2005.

Intel failed to establish that a reasonably diligent POSA looking for extended-range teachings would have found July 2005 WWiSE among all of these documents. As in *Samsung*, there is no evidence that anyone outside the working group regularly visited the alleged sites and accessed July 2005 WWiSE. *Samsung*, 929 F.3d at 1371-72 (The "JCT-VC members were part of ongoing, collaborative efforts to draft the WD4 reference," which was therefore not a printed publication). And here, July

2005 WWiSE was not even a working draft standard as in Samsung. Rather, it was merely one of myriad submissions for the working group to debate whether to incorporate into a working draft—further weighing against public availability. *See SRI*, 511 F.3d at 1197 ("The Live Traffic paper" was not a printed publication because it "was not a finished thesis" that was "complete and ready for public consumption," "but was posted on the FTP server solely to facilitate peer review in preparation for later publication."). And tellingly, the extended-range portions cited by Intel were *not* incorporated into 802.11n standard.

Intel never explains why a reasonable POSA would have played archeologist with the alleged sites, painstakingly combing through thousands upon thousands of submissions of dubious relevancy, manually reading rejected submissions and proposals to in search of an extended-range feature omitted from the draft and final 802.11n standard. *See* AXW-2006 (draft 802.11n standard); AXW-2024 (802.11n adopted standard); AXW-2001 ¶91. A POSA would not have done so. AXW-2001 ¶¶69-70. In short, "there [is] no evidence that such a person would have located the [July 2005 WWiSE reference] on the website[s] by exercising reasonable diligence." *Samsung*, 929 F.3d at 1367, 1369-73.

First, Intel fails to properly allege, much less demonstrate, public availability at the defunct wirelessworld. Intel does not allege that a POSA exercising reasonable diligence in seeking information regarding extending the range of a header field in

a system such as Hansen's (*see* Pet. 13-18) would have visited those sites at all. Pet. 2. Even assuming the reasonably diligent POSA would have visited the sites, the POSA would *not* have found July 2005 WWiSE. *Id.* Intel does not allege that the wirelessworld sites were indexed or searchable at all, much less "meaningfully" as required (such as by subject matter), or provide any other explanation how a reasonably diligent POSA would have found July 2005 WWiSE. *Id.* 2-3.

Intel's arguments regarding the Mentor site fail for similar reasons. Again, Intel fails to allege a reasonably diligent POSA would have visited Mentor to search for extended-range techniques or provide any evidence that any outsiders regularly visited Mentor or accessed the July 2005 WWiSE reference. Pet. 3. And even assuming (as did Intel) that a POSA would have visited the Mentor site, Intel alleges only that the "[e]ntries in Mentor were and remain searchable by year, task group, title, or other parameters." *Id.*; INTEL-1007 ¶22 (repeating conclusory attorney argument).[4] But there is no evidence that Mentor was searchable at the relevant time,

---

[4] For good reason, Intel does not argue that July 2005 WWiSE was presented to the TGn working group and that would have been sufficient. *See Samsung*, 929 F.3d at 1371-72 (distribution to 250-member working group of skilled artisans was insufficient); *SRI*, 511 F.3d at 1196-97 (distribution to the review committee was insufficient).

other than Dr. Lansford's conclusory (and thus insufficient) statement that it was. *Harmonic Inc. v. Avid Tech., Inc.*, 815 F.3d 1356, 1363 (Fed. Cir. 2016) ("[Petitioner's] expert testimony in support of this theory is equally unavailing, adding nothing beyond the conclusory statements in [the] petition."). All of Dr. Lansford's "extractions" were performed in 2023. INTEL-1007 ¶¶21-22. He states that he previously downloaded files, but he never testified that he performed a search of any type at the relevant time. *Id*.

And even assuming *arguendo* that the Mentor site was never upgraded in the intervening *sixteen years* and possessed the same search capability then as it does today, July 2005 WWiSE was still not "*meaningfully* indexed" as required. *Samsung*, 929 F.3d at 1369. Intel does not allege that Mentor was searchable by subject matter because it is not. Pet. 3; INTEL-1007 ¶22. Rather, Intel alleges that Mentor may be filtered by year and/or working group, and that the DCN (Document Control Number), Title, and Author/Affiliation fields may be searched. AXW-2007 (showing prompts in search field); AXW-2004 (well over 100 different working groups); *see also* Pet. 3; INTEL-1007 ¶21. That is not enough for public accessibility.

Even today, Mentor lacks any ability to search the contents of the posted documents. Rather, Dr. Lansford asserts that July 2005 WWiSE could have been found searching in "Task Group N (TGn) with Document Control Number (DCN)

149," and testifies that is sufficient for public availability. INTEL-1007 ¶¶23-24 (discussing Appendix E, which starts at page 302 of the exhibit). Not so. Dr. Lansford merely established that POSAs "lacked a reasonable way of locating the [July 2005 WWiSE] reference *unless they already knew what to look for*," namely, DCN 149, which is insufficient to show public availability. *Samsung*, 929 F.3d at 1372 (affirming the Board's finding). Searching by year, DCN, or author/affiliation, as Intel suggests, is insufficient, as it "bears no relationship to the subject" matter. *Acceleration Bay*, 908 F.3d at 774 (quoting *In re Cronyn*, 890 F.2d 1158, 1161 (Fed. Cir. 1989)).

Mentor also allows for a title search, but that is not enough here. This is not a situation like *Lister*, where the manuscript's title was "Advanced Handicap Alternatives for Golf" and record evidence showed that "[a] reasonably diligent researcher" that was "interested in ways to expedite the game of golf and make it easier for casual players" "would have searched for 'golf' in combination with 'handicap'" and found the reference-at-issue. *In re Lister*, 583 F.3d 1307, 1315-16 (Fed. Cir. 2009).

Here, unlike *Lister*, a POSA seeking to extend the range of the 802.11 standard would ***not*** have found July 2005 WWiSE, but only other documents with, for example, the string "extended range" in the title, DCN, or author fields. *See* AXW-2008 (search for extended range all groups, without quotes, finds results only with

that exact string). Likewise, a search just for "range" or "extend" provides other documents, but not July 2005 WWiSE. AXW-2009, 2010. Mentor does not even provide for Boolean "combination" searches as in *Lister*. AXW-2011 (a search for extend AND range returns no results).

Even worse, the above search for "range" illustrates another deficiency in Mentor's search capability – it simply looks for the entered string anywhere in the Title, Author/Affiliation, or DCN field rather than just the title field. *See*, *e.g.*, AXW-2012, 9 ("John Benko (Orange Labs)"); INTEL-1007 ¶¶22-23 (e.g., searching for DCN 149 by entering "149" in the same field). In sum, Mentor "was not *meaningfully* indexed such that an interested artisan exercising reasonable diligence would have found" the July 2005 WWiSE reference. *Acceleration Bay*, 908 F.3d at 773; AXW-2001 ¶¶69-70.

Intel also argues that a POSA "would have been aware of the proposals made to IEEE by WWiSE." Pet. 3 (citing INTEL-1033-1037). Intel's witnesses chose not to support Intel's attorney argument on this point, and Intel's cited exhibits merely illustrate that there were multiple competing proposals. None of these exhibits mention July 2005 WWiSE or the extended range capability Intel seeks to add to Hansen. *See*, *e.g.*, INTEL-1033, 189 (listing the MIMOT, TGnsync, and WWiSE proposals, but not mentioning July 2005 WWiSE or any range extension in *any* WWiSE document). In short, Intel failed to provide any evidence that a POSA would

have been aware that the particular WWiSE document asserted as prior art here, i.e., INTEL-1005, much less that it contains extended-range teachings.

Finally, Intel does *not* contend that a POSA seeking range-extending techniques would have searched Mentor for the string "WWiSE." For good reason: first, there is no evidence linking "WWiSE" to the extended-range subject matter, other in the broadest way that applies to all of the thousands upon thousands of other documents in the 802.11 section of Mentor. Second, searching on "WWiSE" returns over 70 results. INTEL-1007, 729-33 (App'x K). There is no evidence that a reasonably diligent POSA would have combed through these 70 results searching for extended-range techniques. Perhaps that POSA would have searched for the draft 802.11n standard at the relevant time (i.e., 2009), but, like Hansen, the TGn working group ***did not*** add Intel's proposed extended-range to 802.11n despite being aware of WWiSE. AXW-2001 ¶91. Notably, the alleged sites do *not* include the adopted or draft 802.11n standard. *See*, *e.g*., AXW-2013, 2 (announcing the posting of a draft revision in the "members draft area"); INTEL-1029, 21 (explaining draft standards are in a private section of the wirelessworld website). This is because, like the sites in *SRI* and *Samsung*, they were intended "solely to facilitate peer review in preparation for later publication" of the final draft standard. *SRI*, 511 F.3d at 1197; *Samsung*, 929 F.3d at 1371-72.

For the above reasons, Intel failed to demonstrate public accessibility of July 2005 WWiSE—and thus all of its proposed grounds fail.

IV. The Claims Would Not Have Been Obvious Over Hansen in View of July 2005 WWiSE (Ground 1)

Should the Board reach the merits, the Petition fails there too. Intel goes headlong "into the tempting but forbidden zone of hindsight." *In re Dembiczak*, 175 F.3d 994, 998 (Fed. Cir. 1999). Intel simply ignores numerous technical details of Hansen and July 2005 WWiSE that demonstrate that a POSA *would not* have been motivated to combine the two to arrive at the claimed solution. Instead, Intel "use[s] the challenged patent as a roadmap to reconstruct the claimed invention using disparate elements from the prior art—i.e., the impermissible *ex post* reasoning and hindsight bias that *KSR* warned against." *TQ Delta, LLC v. Cisco Sys., Inc.*, 942 F.3d 1352, 1361 (Fed. Cir. 2019).

Intel does not dispute that Hanson's transceiver is not programmed to generate duplicate header fields during extended range communications, but would need to be modified and reprogrammed to make its proposed combination work. Pet. 13. But instead of showing how Hansen's transceiver could be modified to receive the packets of July 2005 WWiSE that Intel uses to read on the first and second packet elements, Pet. 24-25, 32-33, Intel instead relies on modifications to ***Hansen's packets*** to argue that, Hansen's transceiver can be made compatible to receive WWiSE's packets. Pet. 13-18. This makes no sense, and all Intel has done is shown

that a "modified" Hansen packet (Pet. 13-14) may be compatible with Hansen's transceiver. AXW-2001 ¶¶105. As discussed below, these "modified" Hansen packets are completely irrelevant to Intel's claim-by-claim analysis, which involves unmodified July 2005 WWiSE PPDUs. *See* Pet. 24-25, 32-33; AXW-2001¶106.

Moreover, Intel starts from the flawed premise that a POSA wanting to extend range would resort to repeating bits—one of the least efficient approaches available to a POSA in 2009. AXW-2001 ¶¶61-65. There are numerous techniques to improve the range of a wireless system, such as MIMO, beamforming, changing modulation, lower frequency, or changing the code rate. *See id.* Hansen already incorporated a number of these. Indeed, the 802.11ah standard included a feature called Wi-Fi HaLow that uses 900 MHz bands to provide extended-range WiFi, which had nothing to do with repeating bits. AXW-2001 ¶57; AXW-2014 (ITU News) 5. Intel considers none of this, instead taking a small and incomplete portion of the Extended Range mode from July 2005 WWiSE—an approach that was never adopted into 802.11n—and forcing it into Hansen without any rational basis. AXW-2001 ¶¶91, 105. Intel then simply drops its proposed combination when engaging in the claim-by-claim analysis. *See* Pet. 24-25, 32-33; AXW-2001¶106.

A. Overview of the Art and the Combination

1. Hansen (INTEL-1006)

Hansen explains that a task group was chartered to define a new 802.11n standard. INTEL-1006 [0008]; *see* AXW-2001 ¶91 (noting that the 802.11n standard was not ratified until 2009, citing AXW-2024). The 802.11n standard was to improve upon legacy 802.11 standards "to achieve throughput rates beyond 100 Mbits/s." INTEL-1006 [0008]. Hansen notes that "the worldwide spectrum efficiency (WWiSE) group, and TGn Sync," emerged with proposals for 802.11n. *Id.* [0033].[5] Hansen notes, however, that "[c]urrent proposals from TGn Sync may not provide a mechanism to support greenfield access." *Id.* [0033]. "Greenfield" mode or operation refers to 802.11n devices working only with other 802.11n devices, not legacy devices. AXW-2001 ¶¶79, 92-93. Hansen addresses TGn Sync's lack of greenfield access, by describing "compromise greenfield preambles for 802.11n." INTEL-1006 [0007].

---

[5] Hansen refers to "[a] plurality of proposals" (e.g., INTEL-1006 [0009]) throughout without ever identifying any particular TGn Sync or WWiSE proposal by name or date, and does not incorporate by reference any of these external proposals—WWiSE, TGn Sync, or any of the others—into its disclosure.

Hansen describes both (1) "greenfield" operations (that are "compatible with IEEE 802.11n and communicate with other IEEE 802.11n compatible WLAN devices," but not legacy 802.11 WLAN devices), and (2) "mixed mode" operations (that are compatible with both IEEE 802.11n and other, legacy IEEE 802.11 devices). *Id.* [0032]. In other words, modes of operation include a "greenfield" mode, in which only 802.11n devices exist, and a "mixed mode," in which 802.11n devices and legacy 802.11 devices both exist. *See* AXW-2001 ¶¶92-93. If a WLAN has only 802.11n devices and not legacy devices, the WLAN does not need accommodations for legacy 802.11 devices. *See id.* ¶¶79, 92-93. Hansen describes that using a greenfield mode is beneficial because it "may reduce the portion of time required to transmit data due to overhead comprising preamble fields and header files," and as a result, "enable higher data throughput rates to be achieved." INTEL-1006 [0027]. Hansen explains these higher throughput rates "enable more robust transmission of data by enabling comparable data rates to be maintained while reducing the coding rate of encoded transmitted data," resulting in a "lower SNR while still achieving desired target levels of packet error rates." *Id.*; *see id.* [0072] (explaining "an increase of approximately 26% in the data rate" by "[e]limination of the legacy preamble"), [0073]-[0075]. Thus, in Hansen's greenfield mode, the overall data throughput can be increased by eliminating the unnecessary overhead of the legacy

preamble and header, thereby enabling more robust transmissions. *See* AXW-2001 ¶¶93-94.

Hansen thus proposes adding a "greenfield mode" to the TGn Sync proposal by eliminating the legacy portions in TGn Sync fields. Hansen Figure 6a, relied on in the Petition's purported combination (Pet. 13-14) and depicted below, "shows exemplary training fields and header fields with trailing signal field for greenfield access for N_{SS}>2." INTEL-1006 [0087].

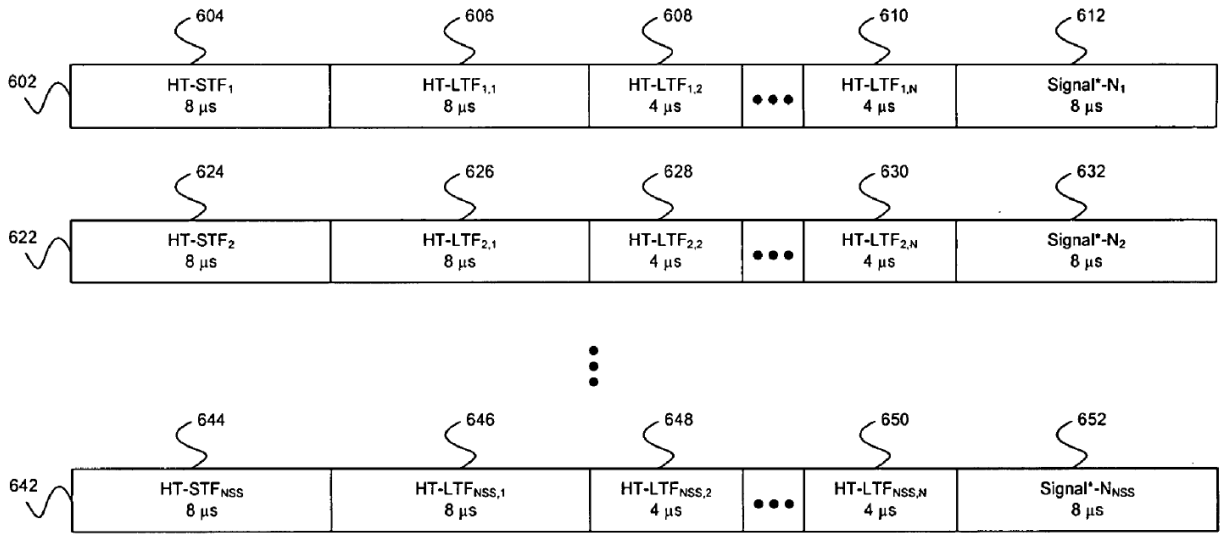

FIG. 6a

Hansen explains that "[t]he Signal*-N fields 612, 632, and 652 may be represented as shown in FIG. 4c." *Id.* Hansen Figure 4c "shows an exemplary HT-SIG header field for mixed mode access in accordance with a TGn Sync proposal." *Id.* [0067]. Thus, Hansen's adopts a TGn Sync proposal's HT-SIG header.

Hansen's Figure 6a makes clear that its Signal*-N field (incorporating the TGn Sync HT-SIG field) would be transmitted from each antenna. *See* INTEL-1006 [0087], [0092], Fig. 6a; AXW-2001 ¶¶95, 102-103. As compared to Figure 4a, Figure 6a does not include an L-STF, L-LTF, or L-SIG field. These are "legacy" fields not needed in Hansen's greenfield mode. INTEL-1006 [0061], [0096]; AXW-2001 ¶¶92-95.

Hansen also describes an exemplary transceiver in which its TGn Sync greenfield preambles are used. *See* INTEL-1006 [0014]-[0015], [0037]-[0058]. Hansen's transceiver includes beamforming and MIMO capabilities. *See id.* [0041]-[0042], [0047], [0052]; AXW-2001 ¶¶97-103. As the Hansen Provisional explains, it utilizes this "optimize[d] pattern of radiation" ("beamforming") by combining "multiple antenna elements with a signal processing capability," which in turn "utilize[s] linear array mathematical operations to increase the average signal to noise ratio (SNR) by focusing energy in desired directions." INTEL-1011 [05]. Likewise, the Hansen Provisional explains that MIMO can be used for "data rate maximization" or "diversity maximization," but also that "hybrid adaptations" can be used. *Id.* [10]-[11]. Hansen's transceiver incorporates aspects of both techniques. *See* AXW-2001 ¶¶102-103.

2. July 2005 WWiSE (INTEL-1005)

July 2005 WWiSE is one of several proposals made in the TGn working group to be adopted as the 802.11n standard. *See, e.g.*, INTEL-1003 ¶¶83-85. This particular proposal was submitted in July 2005, despite bearing March 2005 date markers. *Compare* AXW-2024, *with* INTEL-1012 (another WWiSE proposal, ostensibly from January 2005, and lacking AXW-2024's "extended range" teachings). July 2005 WWiSE describes numerous aspects of the potential standard, including the MAC service, MAC frame formats, management frames, MAC functionality, frame exchanges, protection mechanisms, layer management, and the high throughput PHY specifications. *See, e.g.*, INTEL-1005, 5-12.

Moreover, there are numerous revisions between July 2005 WWiSE and the January 2005 WWiSE proposal beyond just the extended range header bits that the Petition relies upon. *See* AXW-2001 ¶83.

July 2005 WWiSE defines one kind of PPDU as shown below.

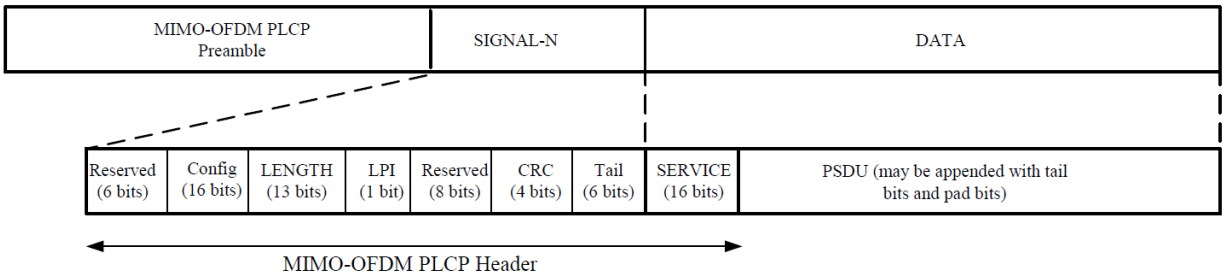

Figure 001 – PPDU frame format: Greenfield access in the 1TX (40 MHz) and 2TX (20 and 40 MHz) modes

INTEL-1005, 58. The preamble "is composed of a sequence of short and long training symbols." *Id.* The header "is composed of the SIGNAL-N field and the

SERVICE field." *Id.* These are followed by potentially multiple MIMO-OFDM symbols of data, with tail and pad bits if necessary. *Id.* While the data may be sent with various modulation, *see, e.g.*, *id.* 61-63, for mandatory modes, the SIGNAL-N field is a single symbol and "shall be performed with QPSK modulation of the subcarriers of the first antenna and shall use convolutional coding at R = 1/2." *Id.* 70; *see also id.* 55; AXW-2001 ¶¶48 (explaining what QPSK modulation is), 82.

July 2005 WWiSE describes an optional Extended Range (ER) mode. That includes "ER Protection," which is "mandatory for NR and ER-capable STAs." INTEL-1005, 46-48. This protection is, at least in part, "[t]o mitigate the hidden node problem" introduced by the ER mode. *Id.* 46. The addition of messages that can be received at a greater distance than others, and having only a subset of devices that can understand those messages, leads to a hidden node problem that can cause collisions over the air and costly retransmissions. *See* AXW-2001 ¶¶66-67, 89. Further, an "ER-capable AP" must provide for an "ER beacon" frame with an ER-specific Basic Rate Set. INTEL-1005, 52. Additionally, the ER mode "is only used with the optional NTX-STBC modes (described in subclause 20.3.5.10) and only with rate-1/2 encoding using BPSK modulation." *Id.* 69; AXW-2001 ¶¶48 (explaining what BPSK modulation is), 85-86. The "NTX-STBC" modes refer to space-time block coding modes, which require the PHY to be able to use more transmit antennas than spatial streams, and to apply special coding to the streams.

See INTEL-1005, 78-82; AXW-2001 ¶86. Finally, in ER mode, "SIG-N is composed of two consecutive MIMO-OFDM symbols," with the second being a frequency-permuted version of the first. INTEL-1005, 69; *see also* AXW-2001 ¶87. In addition, to signal that the PPDU is in the NR mode or ER mode, WWiSE includes adding a REXT bit in the SIG-N field to indicate "standard configuration" (if REXT bit set to 0) and "extended communication range" (if REXT bit set to 1). INTEL-1005, 69; *see also* AXW-2001 ¶87.

Notably, the extended range features that the Petition relies upon from July 2005 WWiSE were not incorporated into the 802.11n standard for which it was proposed. AXW-2001 ¶91.

3. Intel's Hansen and July 2005 WWiSE Combinations

The Petition proposes two different combinations—one in its motivation to combine section and a second, different combination in its claim-by-claim analysis. Intel first proposes combining of Hansen and WWiSE to modify the packets generated by Hansen's transceiver to repeat its Signal*-N to include an ER Signal*-N as taught by July 2005 WWiSE as shown below:

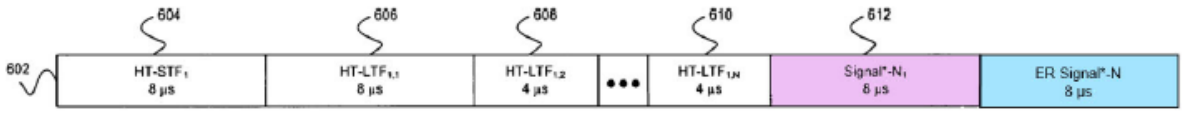

Hansen's "Compromise" PPDU with WWiSE's duplicate SIG-N field for ER communication

Pet. 13-14. Intel contends that a POSA "would have been motivated to include support for the fields (or subfields) necessary to support ER in Hansen's transceiver." *Id.* 14; *see also id.* (describing adding July 2005 WWiSE's REXT bit to Hansen's Signal*-N header field), 17 ("[T]he combination adds a repeated data field … to the PPDU frame … and adds a one-bit sub-field … to the header field."), 18 ("[T]he combination adds fields/sub-fields to an existing packet structure."). In other words, Intel's proposed combination relates to modifying Hansen's compromise greenfield format (Figure 6a) to include an additional duplicate ER field and adding a REXT bit to the reserved to Hansen's Signal*-N header to indicate whether the device is operating in NR or ER configurations. For the reasons discussed above and below, a POSA would not have made this combination. AXW-2001 ¶105.

But that combination, which describes a "modified" Hansen greenfield packet to include an ER field, is ***not*** what Intel advances as the proposed combination in the claim-by-claim analysis. In its claim-by-claim analysis, the Petition proposes—with no motivation to combine analysis whatsoever—to use the Hansen's transceiver architecture with July 2005 WWiSE's mixed mode PPDU formats. *See* Pet. 20-21; AXW-2001 ¶106. Specifically, the claim-by-claim analysis alleges the claimed "first packet" is the following mixed-mode packet in July 2005 WWiSE that includes SIG-MM, SIG-N, and ER-SIG-N:

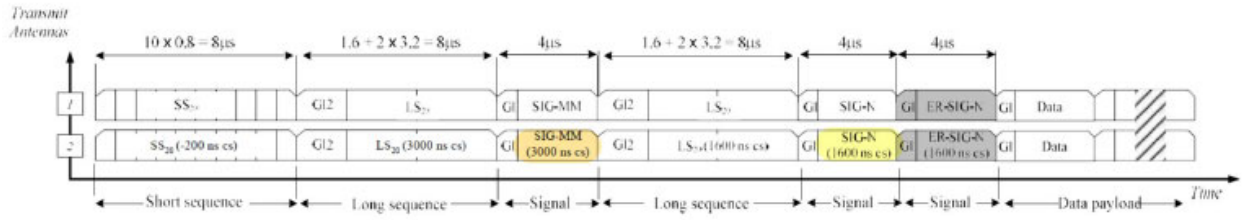

Figure 008 – MIMO-OFDM Training structure for N_{TX} = 2, 20 MHz, mixed-mode operation. The shaded field indicates the optional duplicate SIG-N for extended range communication.

Pet. 25. The alleged "second packet" in the claim-by-claim analysis is the PPDU format for NR mixed mode access in July 2005 WWiSE:

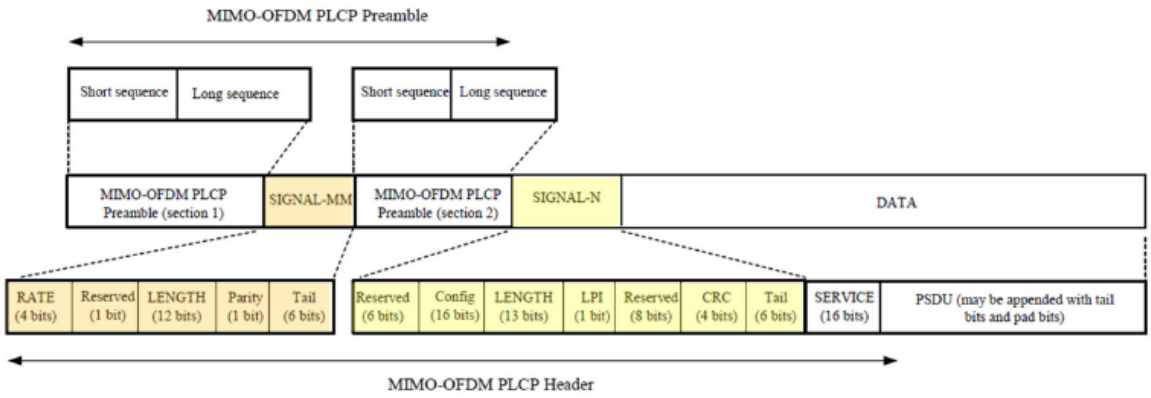

Figure 003 – PPDU frame format: Mixed-mode access in the 1TX (40 MHz) and 2TX (20 and 40 MHz) modes

Pet. 33. Intel then simply asserts that "[a] POSITA would … have had a reasonable expectation of success in implementing WWiSE's PPDUs using Hansen's transceiver" because Hansen's transceiver "compris[es] a transmitter and a receiver in a MIMO system." *Id.* 21; *see id.* at 19. Nowhere does the Petition explain how Hansen's transceiver could or would be modified to receive and support the mixed-mode PPDU formats shown in Figures 008 and 003 of July 2005 WWiSE. Because

in its claim-by-claim analysis, Intel relies on Hansen's transceiver to simply implement July 2005 WWiSE's PPDUs without modification, and fails to provide any relevant reason to combine Hansen and WWiSE in this manner, Intel has not met its burden to show a reasonable likelihood that any claim of the '262 patent is invalid based on its Ground 1. AXW-2001 ¶106.

B. Intel Fails To Show Any Motivation To Implement July 2005 WWiSE's PPDUs Using Hansen's Transceiver

Intel provides no meaningful rationale or explanation as to how Hansen's transceiver would be configured to receive, without modification, July 2005 WWiSE's mixed mode PPDU formats or why a POSA would be motivated to modify the transceiver in Hansen to receive July 2005 WWiSE's mixed mode PPDUs in the first place. At best, Intel argues that Hansen's transceiver "is compatible with the packets of WWiSE," because Hansen's transceiver is in a MIMO system. Pet. 20-21. But such a "conclusory assertion with no explanation is inadequate to support a finding that there would have been a motivation to combine" and "fails to identify any actual reason why a skilled artisan would have combined the elements in the manner claimed." *TQ Delta*, 942 F.3d at 1359. Intel's expert adds nothing, but merely repeats the Petition nearly verbatim. *See* INTEL-1003 ¶99.

The Petition and the supporting expert declaration plucks the repeated header of the Extended Range mode from July 2005 WWiSE, and blindly adds it to Hansen, without considering any of the details surrounding the combination, aside from

attempting to accommodate July 2005 WWiSE's REXT bit. As explained below, Intel (1) ignores the range-enhancing features Hansen already has, as well as the differences between Hansen and July 2005 WWiSE; (2) cherry-picks the use of repeated headers from July 2005 WWiSE without considering how or why it is used; and (3) fails to recognize that in its proposed combination, a receiving device would not know whether it is receiving a normal range or extended range PPDU, and therefore would not be able to properly receive PPDUs. Considering these details—absent hindsight—a POSA would not have been motivated to arrive at the claimed inventions as Intel posits.

1. Intel Ignores the Range Capabilities of Hansen and the Differences in Range Capabilities Between Hansen and July 2005 WWiSE

Intel ignores the details regarding range capabilities of Hansen and July 2005 WWiSE. Because Hansen already has improved range performance, a POSA would not look to July 2005 WWiSE for anything more, or be motivated to modify Hansen's transceivers to accommodate repeated headers. Indeed, the extended range in July 2005 WWiSE would add redundancy to the Hansen's compromise greenfield PPDU reducing overall throughput—contradicting the teachings of Hansen to reduce overhead and improve throughput.

As described above, Intel's combination takes Hansen's greenfield PPDU and adds an extended range PPDU to Hansen's wireless protocol to purportedly extend

the range of reliable communication between devices. *See, e.g.*, Pet. 13-18. But nowhere does Intel demonstrate how that goal is achieved or even desirable given the necessary tradeoffs with loss of throughput. Intel ignores significant technical differences between Hansen and July 2005 WWiSE regarding range capabilities. Further, in creating its hindsight combination, and solving a range problem that does not exist in Hansen, Intel ignores the stated goals of the references, particularly Hansen. There is no evidence of any need for range extension in Hansen other than conclusory attorney argument and bald expert testimony, which is insufficient to establish obviousness. *See, e.g.*, *TQ Delta*, 942 F.3d at 1352.

First, Intel ignores the critical differences between how the header bits are sent in Hansen and July 2005 WWiSE. Hansen explains that, traditionally, 802.11 devices used 48 data-bearing subcarriers. INTEL-1006 [0034]; AXW-2001 ¶¶51, 109. A POSA would have understood the legacy 802.11 standards at the time of invention and would thus have understood from Hansen's explanation that the Signal*-N field is rate ½ coded and transmitted using BPSK modulation, consistent with the legacy 802.11 devices referenced in Hansen. INTEL-1006 [0034]; AXW-2001 ¶109.

This is precisely how legacy 802.11 operated. In 802.11a, from 1999, which also used OFDM, the SIGNAL field is rate ½ coded and mapped onto a single BPSK-modulated OFDM symbol. INTEL-1013, 7-9 ("SIGNAL" "is transmitted

with the most robust combination of BPSK modulation and a coding rate of R = 1/2"); *see also id.* 13; AXW-2001 ¶51; INTEL-1040, 140 ("The PLCP preamble and the signal field are always transmitted at 6 Mbps, binary phase shift keying (BPSK)-OFDM modulated using convolutional encoding rate R = 1/2.").

INTEL-1011 confirms this is also how the TGn Sync HT-SIG field is encoded and modulated. As the TGn Sync proposal relied upon by Intel explains, "BPSK modulation is used for the L-SIG and HT-SIG, with code rate ½ resulting in 6 Mbit/s." INTEL-1011, 131; *see also id.* 133 ("The encoding of HTSIG1 and HTSIG2 shall be the same as LSIG . . . ."). Thus, the TGn Sync HT-SIG field is encoded and modulated just like the SIGNAL field of legacy 802.11a, but comprises two OFDM symbols instead of one because HT-SIG contains twice as many information bits as the legacy SIGNAL field. *See id.* 131-33; AXW-2001 ¶¶74, 110. Indeed, a POSA would recognize that "[t]he HT-SIG field ***is modulated conservatively***" because it uses BPSK modulation and R=1/2 coding. AXW-2015 (Gast 2d ed.) 337; AXW-2001 ¶110.

By contrast, July 2005 WWiSE uses less robust QPSK modulation for its header. July 2005 WWiSE's comparable field to TGn Sync's HT-SIG field is SIGNAL-N (or SIG-N). *See, e.g.*, INTEL-1005, 69-71; AXW-2001 ¶¶82, 111. But as July 2005 WWiSE explains, "the encoding of the single SIG-N MIMO-OFDM symbol shall be performed with QPSK modulation of the subcarriers of the first

antenna and shall use convolutional coding at R =1/2" in mandatory modes. INTEL-1005, 70; *see also* AXW-2001 ¶¶82. 111; AXW-2015, 321 (explaining that the WWiSE SIGNAL-N field "is always sent using QPSK, R=1/2, and is not scrambled").

But it was well known that BPSK is a more robust scheme than QPSK, meaning that Hansen's header already had a longer range provision than the July 2005 WWiSE's header. *See* AXW-2001 ¶¶48, 58, 110-113; *see also, e.g.*, AXW-2015, 235 ("As range from the access point increases, the received signal gets closer to the noise floor. Stations that are closer have higher signal to noise ratios … when the signal-to-noise ratio gets too small to support a high data rate, the station will fall back to a lower data rate with less demanding signal-to-noise ratio requirements."); INTEL-1015, 114-17 (explaining that higher rate modulation requires higher signal-to-noise ratio and relates to decreasing range of the system), 89, 94 (QPSK requires increased SNR versus BPSK). The below figure illustrates the relationship between distance or range and the signal to noise ratio (SNR).

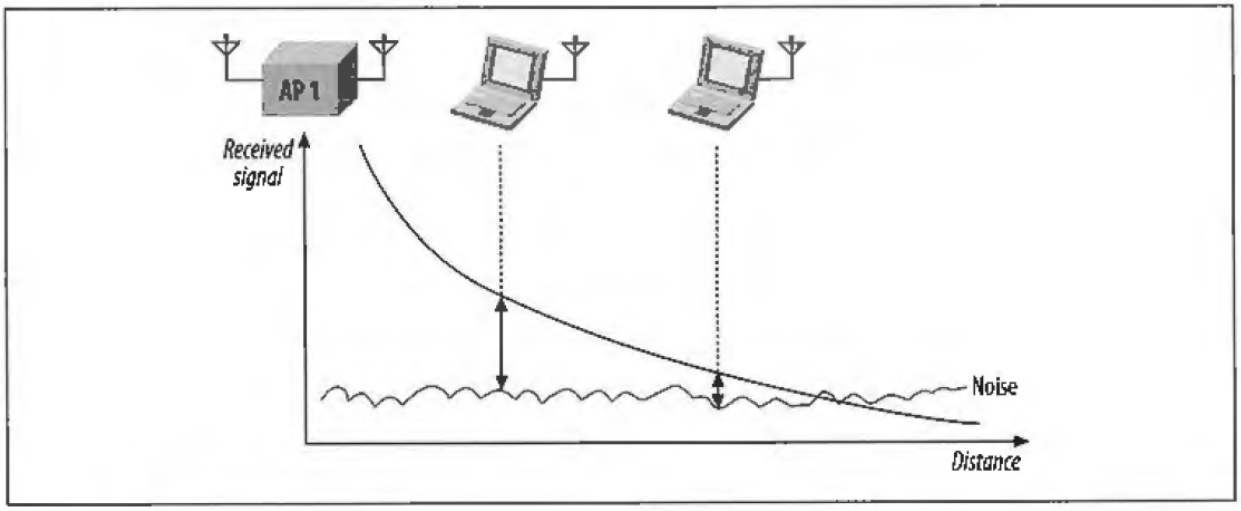

Figure 10-4. Throughput versus distance

AXW-2015, 235. In the above graph, the location of the transmitting access point is at the 0 distance point. The received signal strength will be lower the further away a receiving laptop is, and thus will have lower SNR. *See* AXW-2001 ¶58. There is an inverse relationship between the SNR that a modulation mode needs and the distance or range at which it can operate. *See* AXW-2001 ¶58; INTEL-1015, 114-17. But lower rate modulation modes may still be usable at greater distances because they operate with lower SNR. *See* AXW-2001 ¶58. For example, the below annotated chart shows that the 802.11a BPSK R=1/2 mode can perform at a longer range than the 802.11a QPSK R=1/2 mode. *See* AXW-2001 ¶113.

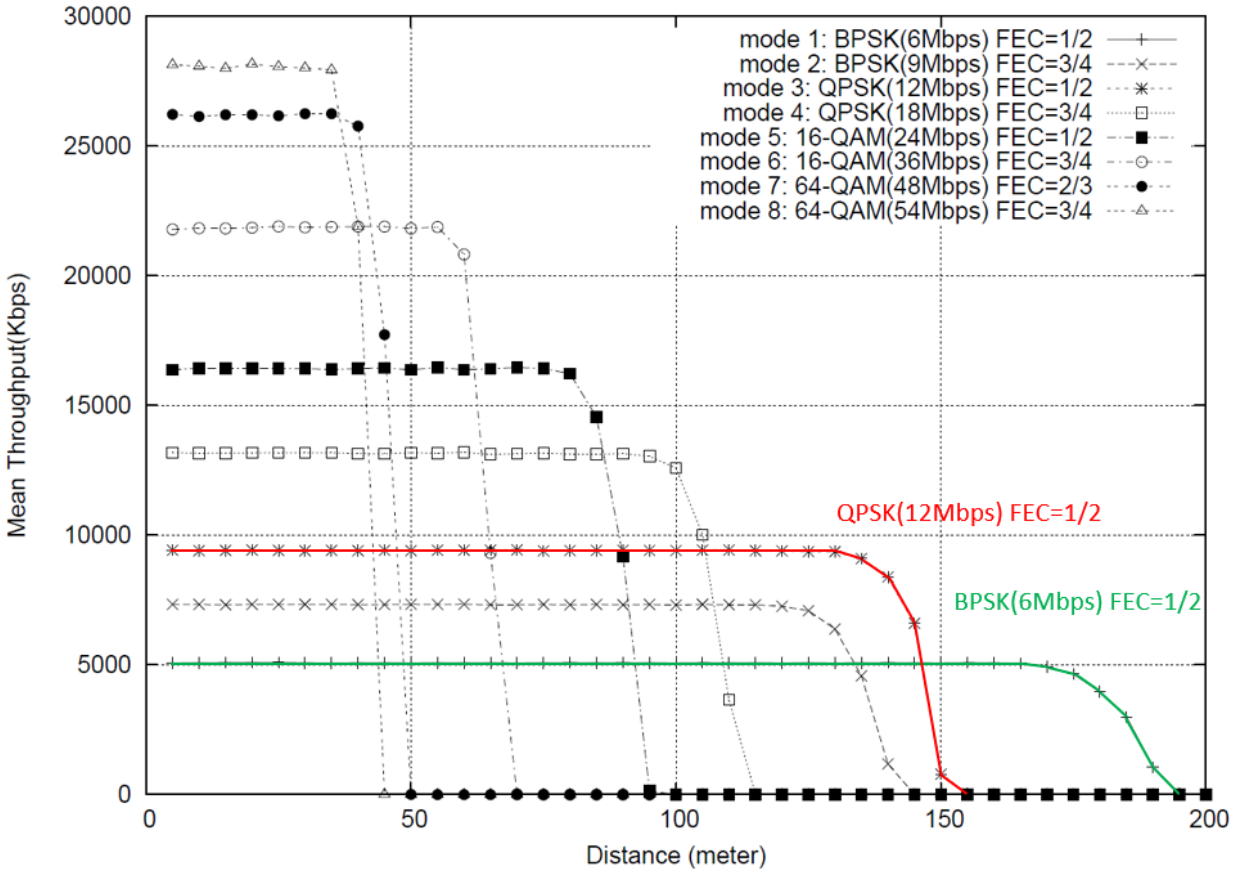

Indeed, this very issue regarding the performance of the modulation used for the header in July 2005 WWiSE was discussed during the TGn Working Group. It was noted that July 2005 WWiSE's QPSK modulation had poor error performance compared to BPSK, and "is not sufficient, since the SIG must be more robust than the data part of the PPDU." AXW-2016 (March 2005 TGn Sync Submission) 35; *see* AXW-2001 ¶112. This underscores what a POSA would have known—the higher-order QPSK of July 2005 WWiSE has worse range performance than the lower-order BPSK of Hansen. AXW-2001 ¶¶48, 111-113. And the repetition in July

2005 WWiSE, at best, puts it back on par with Hansen's BPSK—it does not improve it. *See id.* ¶114.

Second, Hansen already includes a range-extending feature in the form of beamforming. Indeed, Hansen discloses a sounding frame to facilitate beamforming. AXW-2001 ¶77. Beamforming is a range-extending feature where the transmitting device has increased signal energy toward the receiving device. *See, e.g.*, AXW-2001 ¶¶76-78, 115; AXW-2015, 334 ("[*B*]*eamforming* can be used to boost signal quality. Higher signal quality means that a given data rate can be ***used at longer range***."). In contrast, July 2005 WWiSE does not define any beamforming method, and does not benefit from range extension through beamforming. Intel's hindsight-driven reconstruction, which impermissibly focuses only on header bits rather than the teachings of the prior art references as a whole, ignores that this difference would suggest to a POSA that there is no reason to combine them. *See* AXW-2001 ¶115.

Third, Intel ignores that in Hansen's greenfield scenarios, Hansen's MIMO capabilities relied on in the Petition would also improve range compared to legacy 802.11 systems, rendering the combination with July 2005 WWiSE unnecessary. *See* AXW-2001 ¶¶116-117. What Intel's expert does not explain is that sending headers repeatedly in a MIMO configuration also boosts range. *See, e.g.*, AXW-2001 ¶¶62-64, 116-117; AXW-2015, 312 (explaining that in MIMO, "simultaneous receiver processing has benefits in resolving multipath interference, and may

improve the quality of the received signal far beyond simple diversity"); INTEL-1016, 77-78; INTEL-1011, 121-22. The Petition does not substantively consider it in forming its hindsight combination.

Thus, Hansen already has a number of features that enhance its range relative to legacy 802.11 devices, which Hansen and the IEEE TGn Working Group sought to improve. *See, e.g.*, INTEL-1006 [0009]. Intel considers none of this in baldly asserting that a POSA would have been motivated to combine the references "to include support for the fields (or subfields) necessary to support ER in Hansen's transceiver." Pet. 14. *South-Tek Sys., LLC v. Eng'd Corrosion Sols., LLC*, 748 F. App'x 1003, 1006-07 (Fed. Cir. 2018) (finding claims non-obvious because "South-Tek only argued that a person of ordinary skill would have been motivated to use Wood's drain to allow water to drain from Viking's system. ***Viking's system already includes a drum drip drain that serves this purpose***"); *In re Anova Hearing Labs, Inc.*, 809 F. App'x 840, 843 (Fed. Cir. 2020) (reversing obviousness finding because where "a person of ordinary skill in the art would [not] be motivated to modify Brown, ***which already includes vents, to address occlusion effect***").

Intel's expert repeats the attorney argument—and ignores the same details—adding nothing. *See, e.g.*, *Harmonic*, 815 F.3d at 1363 ("[Petitioner's] expert testimony in support of this theory is equally unavailing, adding nothing beyond the conclusory statements in [the] petition."); *Smartmatic USA Corp. v. Election Sys. &*

Software, LLC, IPR2019-00527, Paper 32 at 34 (Aug. 5, 2020) (giving no weight to an expert declaration that "merely parrots the language in the Petition").

Further, Hansen explains that a greenfield PPDU—which the Petition relies on—provides benefits, including use of "more robust transmission" with "comparable data rates" by *eliminating* portions of the PPDU overhead. INTEL-1006 [0027]; *see id.* Abstract, [0033], [0072]-[0075], [0096]; AXW-2001 ¶¶93-94. Intel never addresses this either. Absent a compelling reason to do so, a POSA would not have added redundant bits to Hansen's greenfield PPDU overhead—as Intel's combination does—against Hansen's teachings. *See* AXW-2001 ¶118. *See, e.g.*, *Chemours Co. FC, LLC v. Daikin Indus., Ltd.*, 4 F.4th 1370, 1376-77 (Fed. Cir. 2021) (finding no motivation to combine where proposed modification "would necessarily involve altering the inventive concept" of the primary reference, which taught away from combination); *Trivascular, Inc. v. Samuels*, 812 F.3d 1056, 1068 (Fed. Cir. 2016) (finding no motivation to modify the prior art where doing so "would destroy the basic objective" of the prior art).

2. Intel Cherry-Picks One Feature Out of July 2005 WWiSE While Failing to Consider the Prior Art References for All Their Teachings

Using nothing but hindsight, the Petition focuses entirely on adding repeated header bits to Hansen while disregarding the consequences of such repetition. Specifically, Intel ignores why and how July 2005 WWiSE implements its ER mode.

Moreover, Intel provides no basis for combining the prior art to extend the range for reception of header bits only.

The ER mode in July 2005 WWiSE is not primarily about headers, but is about range extension for the data portions of the packets. *See* AXW-2001 ¶119. Intel argues that July 2005 WWiSE "provides improved reliability when, for example, a STA operates farther away from an AP," noting that "'[a] characteristic of ER MCS is that they have a longer range than NR MCS.'" Pet. 24. But Intel ignores the context of this statement from July 2005 WWiSE. The "ER MCS" refers to the transmission mode of the data portion of an ER mode PPDU—not the header. *See* AXW-2001 ¶¶85-86, 119, 122, 131. As July 2005 WWiSE explains, the ER mode "is ***only used*** with the optional NTX-STBC modes (described in subclause 20.3.5.10) and ***only*** with rate-1/2 encoding using BPSK modulation." INTEL-1005, 69. Subclause 20.3.5.10 in turn describes how the optional NTX-STBC modes must be formed, which can only be used "when N_{TX}, the number of TX antennas, is greater than N_{SS}, the number of transmitted spatial streams" and requires particular coding and relationships between the signals transmitted on the various antennas. *Id.* 78-82; *see also, e.g.*, AXW-2001 ¶¶85-86, 122; AXW-2015, 318-19. The Petition never even mentions STBC or that the ER mode of July 2005 WWiSE is used with STBC, let alone considers how such additional complexities to the transceiver could or

would be incorporated into Hansen, which never mentions such functionality. *See* AXW-2001 ¶122.

The Extended Range mode of July 2005 WWiSE comes with additional complexities that Intel never considers. Indeed, July 2005 WWiSE requires that four main features are needed for range extension: (1) Appropriate PHY modes (meaning the STBC modes described above); (2) Beacon (meaning a special management frame that adds complexity to the overall protocol); (3) Coexistence (meaning special protection mechanisms need to be built into the protocol to allow for normal range and extended range devices to both be on a network and avoid hidden node problems); and (4) enable robust signaling (meaning the SIGNAL header field must be receivable at an extended range relative to the NR SIGNAL header field). AXW-2001 ¶¶85-90, 119-123; *see also* INTEL-1005, 46-48 (describing "mandatory" protection mechanisms when using ER-capable devices in order to "mitigate the hidden node problem"), 50 (describing "ER beacon" using "an ER MCS"), 52 (describing "mandatory" beacon rules for ER-capable devices). At best, Intel addresses only the fourth requirement, but as explained in Section IV.B.1 *supra*, Intel fails to consider that July 2005 WWiSE uses less robust modulation for its header than Hansen to begin with. And by failing to consider all these other required complexities for July 2005 WWiSE's ER mode, and failing to justify the need for any range extension in Hansen, Intel fails to demonstrate a motivation to pluck just

the repeated header bits out of July 2005 WWiSE while ignoring the rest of its teachings, which would greatly complicate any purported combination. AXW-2001 ¶125; *see, e.g.*, *Henny Penny Corp. v. Frymaster LLC*, 938 F.3d 1324, 1331-32 (Fed. Cir. 2019) (noting "the longstanding principle that the prior art must be considered for all its teachings, not selectively"); *Provisur Techs., Inc. v. Weber, Inc.*, No. 2021-1851, 2022 WL 17688071, at *5 (Fed. Cir. Dec. 15, 2022) ("[B]ecause of this ***increased complexity***, a person of ordinary skill in the art would have lacked motivation to combine the references").

By ignoring the above added complexity, which are needed for July 2005 WWiSE's Extended Range mode to function properly, Intel nowhere demonstrates that the range of receiving useful data (i.e., the data or payload of the greenfield PPDUs) is achieved. *See* AXW-2001 ¶¶119, 124, 131. Yet Intel argues a motivation to combine based generally on "extend[ing] the range of reliable communication between devices by providing diversity when environmental conditions (fading and/or noise) adversely affect communication." Pet. 17. But Hansen does not mention any need for extended range. That is because, as explained in Section IV.B.1 *supra*, Hansen already had range-extending features like beamforming. *See* AXW-2001 ¶¶115-116, 124. Indeed, a POSA would have understood that, since basic repetition was known, additional range extension would have been desirable, Hansen could have considered adding repeated headers. But Hansen chose not to,

underscoring that a POSA would not find it desirable to add repeated headers to Hansen. AXW-2001 ¶132.

A POSA would have understood that such features of Hansen already provided the functionality that Intel states is the reason to make the combination. *See* AXW-2001 ¶¶122, 131-133. Moreover, there were other ways to extend range such as beamforming, changing the modulation mode, operating at lower frequency bands, or changing the code rate. *Id.* ¶132. Intel never considers any of them, much less explains why a POSA would have necessarily plucked July 2005 WWiSE's range extension feature—which was rejected for its proposed standard—rather than the alternative solutions. *Id.* ¶¶91, 132. Intel oversimplifies its analysis because a POSA would not have simply adopted one option to extend range without first testing, comparing, and weighing that option against all others before concluding that any single one is viable or desirable.

At bottom, the most Intel can claim is that its combination could extend the range for reception of the Signal*-N field by itself.[6] But nowhere does Intel articulate a motivation to combine the prior art to merely extend the range of header bits only. Indeed, a POSA would have understood that extending the range of header bits alone would not be useful here, and would not have modified Hansen (against

[6] As explained in Section IV.B.3 *infra*, Intel's combination fails to even do this.

Hansen's teachings) to add a feature that Hansen does not need that does not provide extended range for the payload data. *See* AXW-2001 ¶¶118-119, 131-133; *supra* Section IV.B.1. And Intel never explains what would have motivated a POSA to go back to a proposal that the 802.11 TGn rejected and never included in the 802.11n standard. *See* AXW-2001 ¶91. Thus, Intel has failed to articulate any reason a POSA would have combined Hansen and July 2005 WWiSE only to add repeated header bits. *See, e.g.*, *Kinetic Concepts, Inc. v. Smith & Nephew, Inc.*, 688 F.3d 1342, 1366-67 (Fed. Cir. 2012) ("Even if the references disclosed all of the limitations of the asserted claims, which they do not, S & N still needed to proffer evidence indicating why a [POSA] would combine the references to arrive at the claimed invention.").

3. Intel Fails to Provide any Rational Reasons to Combine Hansen with July 2005 WWiSE as in the Petition

By examining the details and differences of Hansen and July 2005 WWiSE, Intel's purported motivations to combine disintegrate, and it is apparent that Intel relies on impermissible hindsight to create a combination with no perceivable benefits. "The showing of a motivation to combine must be clear and particular, and it must be supported by actual evidence." *Teleflex, Inc. v. Ficosa N. Am. Corp.*, 299 F.3d 1313, 1333-34 (Fed. Cir. 2002) (finding expert supporting invalidity relied on hindsight). Intel fails to identify any clear or particular motivation to combine when the references are properly considered, and offers only unsupported expert testimony, which largely parrots the Petition. *See, e.g.*, *Harmonic*, 815 F.3d at 1363;

Smartmatic, IPR2019-00527, Paper 32 at 34. Lacking any valid motivation to combine, the Petition instead uses the claims of the '262 patent as a roadmap and works backwards to reach the flawed Hansen-WWiSE combination. The Board should reject Intel's improper use of hindsight.

a. Hansen Does Not Suggest Combination With July 2005 WWiSE

Hansen's goal of greenfield PPDUs—PPDUs without unnecessary legacy fields—does not suggest combining Hansen with features from July 2005 WWiSE that add additional fields to the PPDU.

Intel asserts that Hansen suggests combination with July 2005 WWiSE because "Hansen sought a compromise by combining aspects of the mixed-mode TGn Sync preambles and headers with greenfield preambles and headers proposed by the WWiSE industry group." Pet. 10. But Hansen is not focused on the two proposals at large; Hansen is focused just on "greenfield preambles for 802.11n," which were absent from TGn Sync proposals. INTEL-1006 [0007], [0033]; AXW-2001 ¶92. Hansen explains "greenfield" refers to a situation where no legacy 802.11 devices are present, allowing the network to dispense with fields required only by legacy 802.11 devices. *See* INTEL-1006 Abstract, [0027], [0032]-[0033]; AXW-2001 ¶92. Hansen does generally refer to "[t]he WWiSE proposals" and describes exemplary fields in accordance with them. INTEL-1006 [0034], [0077]-[0086]. But Hansen's Figure 6a training and header fields, on which Intel's combination is based,

are derived from TGn Sync proposals and use nothing from the WWiSE fields described. AXW-2001 ¶130. That is not surprising given that the July 2005 WWiSE PPDU definition was rejected by the IEEE. *Id.*

The Signal*-N field of Hansen Figure 6a uses the HT-SIG field from Hansen Figure 4c. AXW-2001 ¶95. Nothing from WWiSE (e.g., Figures 5a-5c) is incorporated into Hansen's Figure 6a PPDU aside from the general concept of a greenfield mode. *See id.* ¶96. Hansen Figure 4a turns into Hansen Figure 6a simply by removing the L-SIG field (not needed in a greenfield system), but ensuring that short and long preambles (HT-STF and HT-LTF respectively) remain ahead of the Signal*-N field, as is necessary to ensure proper reception of the Signal*-N field. *See id.* ¶95. While Hansen Figure 6a refers to these as "HT" training fields, Hansen does not require them to be different from the "LT" training fields in Figure 4a, and a POSA would have understood that they could be the same. *See* INTEL-1006 [0062] (Figure 4a L-STF and L-LTF both approximately 8 μs in duration), [0094] (Figure 6a HT-STF and HT-LTF both approximately 8 μs in duration); AXW-2001 ¶95. Figure 6a also does not adopt the ordering of the symbols from the WWiSE proposals depicted in Hansen Figure 5c. Specifically, in Figure 6a, all training symbols are transmitted before the Signal*-N field unlike in Figure 5c for WWiSE. *See* AXW-2001 ¶96.

Thus, aside from a greenfield mode, Hansen borrows nothing from the WWiSE proposals in forming its greenfield preambles, let alone "bridge the gap between the WWiSE and TGn Sync industry groups" and their varied approaches to the standard as Intel argues. Pet. 15; *see, e.g.*, AXW-2001 ¶130; AXW-2015, 314-42. Hanson's mere desire to have a greenfield mode for TGn Sync—meaning one without unnecessary legacy fields—provides no motivation to start re-architecting the protocol to include additional features neither mentioned by, nor beneficial to, Hansen. *See* AXW-2001 ¶130. Nor would a general desire to combine two competing proposals—filled with numerous details, options, and features—to arrive at a final standard be enough motivation to combine the ER header bits into the standard. *See* AXW-2001 ¶130. None of the documents that Intel cites mention repeated header bits, and indeed, the 802.11n standard *did not* incorporate July 2005 WWiSE's repeated header bits it into its headers. *See* AXW-2001 ¶130; INTEL-1034; INTEL-1033. In other words, when a compromise was actually reached and the 802.11n standard was defined, the TGn working group determined that the repeated header of July 2005 WWiSE should not used. *See* AXW-2001 ¶130. Thus, Intel fails to provide evidence of motivation to combine the header repetition of July 2005 WWiSE with Hansen.

b. Intel Incorrectly Equates Extended Range Between Devices With Merely Repeating Header Bits

Intel asserts that a POSA would have been motivated to combine to extend the range of communications between devices. Pet. 14. But July 2005 WWiSE does not provide extended range between devices merely by repeating header bits—it requires far more to do that. Thus, Intel's purported motivation, generally, for extended range provides no basis for only repeating header bits.

As explained above, Intel ignores that Hansen already has improved range versus July 2005 WWiSE, including with respect to the header on which the Petition is solely based. *See supra* Section IV.B.1. And Intel provides no evidence that further improvement would have been beneficial. *Rovalma, S.A. v. Bohler-Edelstahl GmbH & Co. KG*, 856 F.3d 1019, 1025-26 (Fed. Cir. 2017) ("[I]t does not necessarily follow from prior-art disclosures of the general desirability of [an attribute] that a person of ordinary skill would have been motivated to increase [that attribute] beyond levels previously achieved.").

And as described above in Section IV.B.2, Intel focuses only on the repeated header and ignores extending the range of anything else such as the data payload. But Intel cites no evidence that a POSA would have believed that repeating the header would be beneficial if added to Hansen. At most Intel argues that adding WWiSE's ER capability would improve Hansen's transceiver by providing additional diversity. Pet. 15-17; *see* AXW-2001 ¶¶85-86. Yet Intel never explains how it could or would be incorporated into Hansen, given that July 2005 WWiSE's

ER MCS must use NTX-STBC, which is wholly absent from Hansen and Intel's combination. *See* AXW-2001 ¶131.[7] Moreover, TGn discussed that beamforming was "superior to STBC." *See, e.g.*, AXW-2016, 41-42; AXW-2001 ¶133. Thus, Intel's purported evidence does not motivate adding the July 2005 WWiSE ER features into Hansen, let alone adding just the repeated header. *See, e.g.*, *St. Jude Med., LLC v. Snyders Heart Valve LLC*, 977 F.3d 1232, 1242-43 (Fed. Cir. 2020) (finding no motivation to combine because "the particular combination" proposed kept only one of two "integral" aspects of a reference without "meaningful explanation for this proposal"); AXW-2001 ¶¶131-132.

Arguing only in generic terms, Intel argument asserts that extended range capability is simply beneficial in WLAN systems because it improves diversity and thus "robustness of communication." Pet. 16-17. But Intel fails to recognize that such extended range capabilities through repeating headers—comes at the expense of throughput. AXW-2001 ¶¶118, 131-132. Adding unnecessary bits and decreasing throughput are the opposite of Hansen's teachings. *See, e.g.*, INTEL-1006 Abstract

---

[7] As explained above in Section IV.B.2, Intel ignores all the other aspects of July 2005 WWiSE that are attendant with its ER mode, including hidden node protection and additional beacon frames, and fails to show any motivation that a POSA would add these to Hansen as well. *See* AXW-2001 ¶124.

("The utilization of greenfield access may reduce the portion of time required to transmit data due to overhead comprising preamble fields and header fields. This may enable higher data throughput rates to be achieved."); *see also* AXW-2001 ¶118; *supra* Section IV.B.1. While trading off throughput for additional range may be desirable in some situations, given the modulation mode of Hansen's Signal*-N fields is already more robust relative to July 2005 WWiSE, there is no evidence that this is the case here. *See* AXW-2001 ¶¶131-133. Simply put, Hansen and July 2005 WWiSE have different approaches for range extension, and because each "independently operates effectively, a person having ordinary skill in the art, who was merely seeking to [increase range], would have no reason to combine the features of both devices into a single device." *Kinetic Concepts*, 688 F.3d at 1369; *see also supra* Section IV.B.2.

Moreover, if it were merely "commonplace" for a POSA to add ER capability by "add[ing] fields and sub-fields" as Intel's expert posits (INTEL-1003 ¶93), then one would have expected any of the 802.11 standards prior to 802.11n (or even 802.11n, which does not incorporate July 2005 WWiSE's repeated header bits) to have included that feature. *See* AXW-2001 ¶91. Instead, as a POSA knew, wireless networking is a series of tradeoffs. *See id.* ¶132. Those tradeoffs must account for modulation modes used, which Intel entirely fails to do. *See id.* Intel and its expert state that "[t]he ER capability of July 2005 WWiSE achieves communications at a

greater distance through the introduction of diversity into its transmitted frames (PPDU)." INTEL-1003 ¶93. Putting aside that they have provided no evidence of motivation to combine just repeated headers from July 2005 WWiSE with Hansen, if the ER capability achieves communications at greater distance, that is relative only to July 2005 WWiSE's NR capability—not relative to Hansen. *See* AXW-2001 ¶132. Neither the Petition nor Intel's expert provide any evidence to the contrary. Thus, the assertion that a POSA "would have been motivated to include WWiSE's ER capability to improve robustness of communication" and to "***extend the range of reliable communication*** between devices" is baseless, particularly because there is no analysis of the modulation and coding used between the two or the relative range performance (including the data). Pet. 16-17; *see* AXW-2001 ¶132.

c. Intel's REXT Bit Implementation Is Flawed

Despite recognizing that both TGn Sync and July 2005 WWiSE were working toward an 802.11n standard, Intel asserts that a POSA would have eliminated the only reserved bit in HT-SIG for the REXT bit in its combination. Pet. 14; *see also* INTEL-1006 [0007]; AXW-2001 ¶134. But a POSA would have known that industry standards such as 802.11 routinely keep one or more reserved bits for extensibility, and thus would not be motivated to combine the Hansen and July 2005 WWiSE formats in such a way that would remove the reserve bit. *See, e.g.*, AXW-2001 ¶134; INTEL-1013, 7; INTEL-1011, 133-34; INTEL-1005, 69-70; AXW-2024,

275-77. Indeed, Intel admits that "the addition of fields/sub-fields to network packets was commonly done to implement enhanced features or otherwise support modifications to standards such as 802.11." Pet. 17. But eliminating the reserved bit means the combination would no longer be fit for the references' stated—and Petition-admitted—purposes. *See, e.g.*, *Cook Grp. Inc. v. Boston Sci. Scimed, Inc.*, 809 F. App'x 990, 1001 (Fed. Cir. 2020) ("[T]he Board may consider whether the modification renders the reference inoperable for its intended function in deciding whether a POSA would have a motivation to combine the references, even if that function is not a feature of the claimed device at issue."); AXW-2001 ¶134. This would direct a POSA away from the combination because eliminating a reserve bit would not be desirable. *See* AXW-2001 ¶134.

Moreover, because the combination offers no way to send payload data at extended range, and the Petition fails to identify any provision for a receiver to know when to switch range modes, a POSA would not have made the combination as proposed. AXW-2001 ¶¶118-119, 131-133.

d. Intel Asserts a Straightforward Combination Only By Ignoring the Details

Intel asserts that its combination is merely the addition of "repeated data field (known method) to the PPDU frame (prior art element) and adds a one-bit sub-field (or reassign existing reserved bit if available) to the header field." *See* Pet. 17. But as explained throughout above, Intel and its expert ignore the details—as discussed,

Hansen and July 2005 WWiSE are not similar other than superficially. And here again, Intel's expert merely parrots the Petition and offers no evidence to support his opinions. *See, e.g.*, *Harmonic*, 815 F.3d at 1363; *Smartmatic*, IPR2019-00527, Paper 32 at 34. Hansen is not ready for improvement in the same way because Hansen already has better range capabilities than July 2005 WWiSE. *See supra* Section IV.B.1. Further, Intel makes no assertion and provides no evidence that STBC was a known technique that was readily and easily combinable with Hansen's transceiver. Yet that is the only use case for July 2005 WWiSE's ER capability. *See supra* Section IV.B.2; AXW-2001 ¶135.

Intel also asserts that a POSA would simply apply the ER capability to Hansen's Figure 6a, the greenfield PPDU, without explanation. Pet. 13. This is the equivalent of saying *any* two header structures are similar because they have bit maps. Even a cursory review shows the two are very different, reflecting the very different functionalities of the two proposals. *See* AXW-2001 ¶¶136-137. And Intel's use of Hansen's Figure 6a greenfield mode packet makes even less sense in view of the claim-by-claim analysis, which relies on WWiSE's mixed mode OFDM symbol—not greenfield—to read on the claims. Pet. 25, 30. Hansen includes a sounding packet bit, and 2 bits indicating the number of training symbols used with the sounding packet, used *inter alia* with beamforming—another range boosting technique. AXW-2001 ¶137. July 2005 WWiSE does not have sounding packets or

beamforming. *Id.* Hansen uses 6 bits for modulation, coding, and number of spatial streams, while July 2005 WWiSE uses 12 bits to provide similar information. *Id.* Hansen has 1 bit for the guard interval, while July 2005 WWiSE has no such bits or capability. *Id.* While both Hansen and July 2005 WWiSE have 1 bit related to aggregated PPDUs, they have different meanings. *Id.* Hansen includes 2 bits for initialization of a scrambler, while July 2005 WWiSE has no such bits. *Id.* Hansen includes 1 bit for 20/40MHz selection, while July 2005 WWiSE uses 2 bits for the same function. *Id.* Hansen reserves 1 bit for future extensibility, while July 2005 WWiSE reserves 13 such bits. *Id.* And July 2005 WWiSE adds the REXT bit, which is not used—and has no use—in Hansen. *Id.* And for all of these reasons, it makes no sense that a POSA would reprogram Hansen's transceiver to accept July 2005 WWiSE's PPDUs as Intel advances in the claim-by-claim analysis. Pet. 20-21.

Beyond the header, the PPDUs have further differences. Hansen uses two symbols BPSK-modulated with 24 header bits each, while July 2005 WWiSE uses one symbol QPSK-modulated with 54 header bits. *See supra* Section IV.B.1; AXW-2001 ¶136. The Petition considers none of these differences. That is entirely unsupported.

Intel also asserts the combination merely combines prior art elements according to known methods. Pet. 17. This is wrong for similar reasons—Intel ignores the details. That a POSA may know how to modify bit maps does not

demonstrate that a POSA would have been motivated to make the specific changes Intel asserts would be made. *See, e.g.*, *St. Jude*, 977 F.3d at 1242-43. For example, as explained above, a POSA would have recognized that including the REXT bit in the HT-SIG symbol of Hansen would not be desirable. Likewise, Intel nowhere demonstrates that a POSA would have known how to add July 2005 WWiSE's STBC approach—the only use July 2005 WWiSE makes of the REXT bit and ER mode—to Hansen's transceiver, let alone expected success in doing so. *See supra* Section IV.B.2. Intel argues a POSA would have expected success only by ignoring the details, the complications, and pitfalls of the proposed hindsight combination as explained throughout above. *See* AXW-2001 ¶138.

V. Ground 2 Fails Because Zhang (INTEL-1017) Is Not Prior Art

Intel failed to meet its burden to show that Zhang is prior art via a priority claim to a July 30, 2009 provisional application ("'900PROV," INTEL-1019).[8] *Dynamic Drinkware, LLC v. Nat'l Graphics, Inc.*, 800 F.3d 1375, 1378-79 (Fed. Cir. 2015). Intel is required, but failed, to show that '900PROV was enabling and provides adequate written description support. *See id*. at 1380 (also explaining that

[8] The Petition cites to specific slides numbers shown in the document reflected in INTEL-1019. For clarity, this Preliminary Response cites to page numbers of INTEL-1019, which correspond go the PDF page number.

there is no "presumption that a patent is entitled" to a provisional's filing date); *Amgen Inc. v. Sanofi*, 872 F.3d 1367, 1380 (Fed. Cir. 2017).

First, Intel made no attempt to show that '900PROV provides an enabling disclosure—and therefore failed to meet its burden for that reason alone. *See Dynamic Drinkware*, 800 F.3d at 1380. Second, even assuming enablement, Intel failed to show sufficient written description support in '900PROV for any claim of Zhang. To do so, Intel must demonstrate that (1) at least one claim of Zhang is supported by '900PROV, and (2) the specific subject matter relied upon as prior art is supported by '900PROV. *Id.* at 1380-82; *Forescout Techs., Inc. v. Fortinet, Inc.*, IPR2021-01328, Paper 12 at 7-10 (Jan. 27, 2022). Intel, however, failed at least the first prong—it did not (and cannot) show that at least one claim of Zhang is supported by '900PROV.

1. Element 1[A]: preamble's first field[9]

Intel's allegation of support for Element [1A] of Zhang rests entirely on Figure 5 of '900PROV. Pet. 53-54. But the cited portions fail to recite all of the details of Claim 1A.

For one, Intel points to no disclosure in the '900PROV of a "receiver device that conforms to a second communication protocol but does not conform to the first

[9] *See* Claim Listing at Pet. 50 for complete claim language.

communication protocol." *See* Pet. 53-54; AXW-2001 ¶145. Instead, Intel uses its expert to simply gap-fill this limitation by arguing that, as a general matter, "[a] legacy receiver that conforms to 802.11a … will not conform to subsequent versions of 802.11—including 802.11ac … without additional hardware and/or software development." Pet. 53-54. Intel fails to identify any disclosure in the '900PROV of any such receiver device. Rather, Intel simply cites its expert as support for these limitations. *Id*. Nothing in the cited portions of '900PROV even suggest that 802.11a devices will not conform to subsequent versions of 802.11. AXW-2001 ¶145. Instead, Intel's expert uses hindsight reasoning based on post-priority date Zhang or the 802.11ac standard. That doesn't cut it. "***It is the disclosures of the applications that count***. Entitlement to a filing date does not extend to subject matter which is not disclosed, but would be obvious over what is expressly disclosed." *Lockwood v. Am. Airlines, Inc*., 107 F.3d 1565, 1571-72 (Fed. Cir. 1997).

Second, and relatedly, Intel's expert assumes that the "second communication protocol" is an 802.11a standard protocol, without any such disclosure in the '900PROV. AXW-2001 ¶146.

This assumption contradicts Figure 1 of Zhang, which includes a disclosure of a receiver device capable of communicating with a legacy client, as shown below:

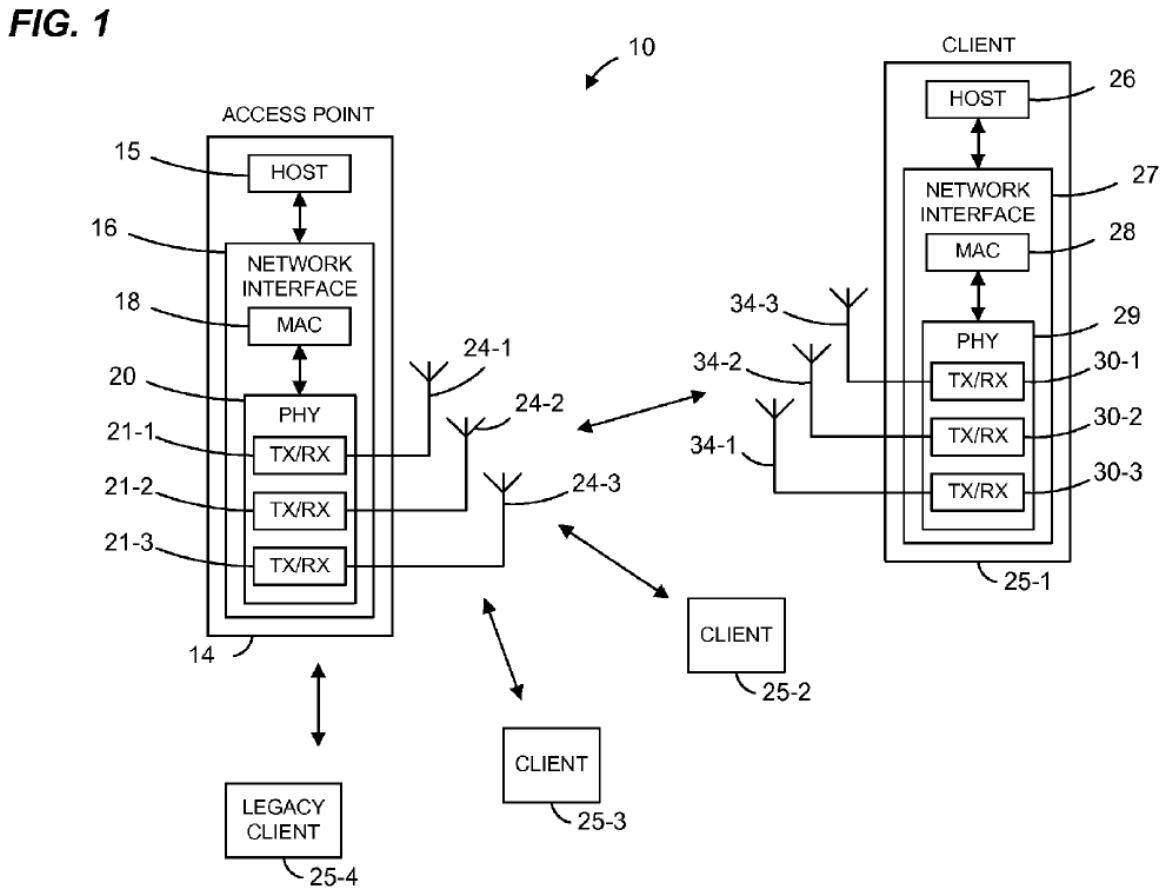

INTEL-1017, Fig. 1. Zhang's text further describes the "second communication protocol" as being the 802.11n standard—not the 802.11a standard. INTEL-1017 [0064] (describing Figure 1 and describing "the MAC unit **18** and the PHY unit **20** are also configured to operate according to a ***second communication protocol (e.g., the IEEE 802.11n Standard)***"). Intel did not, and cannot, justify swapping the 802.11n standard disclosed as the "second communication protocol" in Zhang for the 802.11a standard in the '900PROV. AXW-2001 ¶147. Accordingly, Intel failed to show description support in the '900PROV for Element 1[A].

In addition, Element 1[A] recites "generating a preamble of the data unit, wherein the preamble includes a first field having information that indicates a duration of the data unit," whereby once the "first field" is decoded "the duration of the data unit" is determined. Intel contends that the "first field," is the "L-SIG," which "includes a 'length' subfield that indicates the duration 'T' of the VHT data unit." Pet. 53. Intel thus asserts that '900PROV's disclosure that "802.11a devices determine the duration of the VHT data unit by decoding L-SIG to learn the value of T," teaches this limitation. *Id.* 54. But Intel is wrong—Figure 5 of the '900PROV does not include a first field that includes duration information indicating "the duration of the data unit," as claimed. Rather, the first field of Figure 5 (L-SIG) includes only information of duration T_1—not T—and T_1 does indicate "the duration of the data unit," i.e., the VHT packet. AXW-2001 ¶¶148-149.

To explain, Figure 5 (MM HT Spoofing mode) shows the "length" subfield for "L-SIG" is set to a T_1 (not T), and instead the "HT-SIG1" field includes a T_xTime Computation that "equals to the true duration of the VHT packet" (highlighted in green):

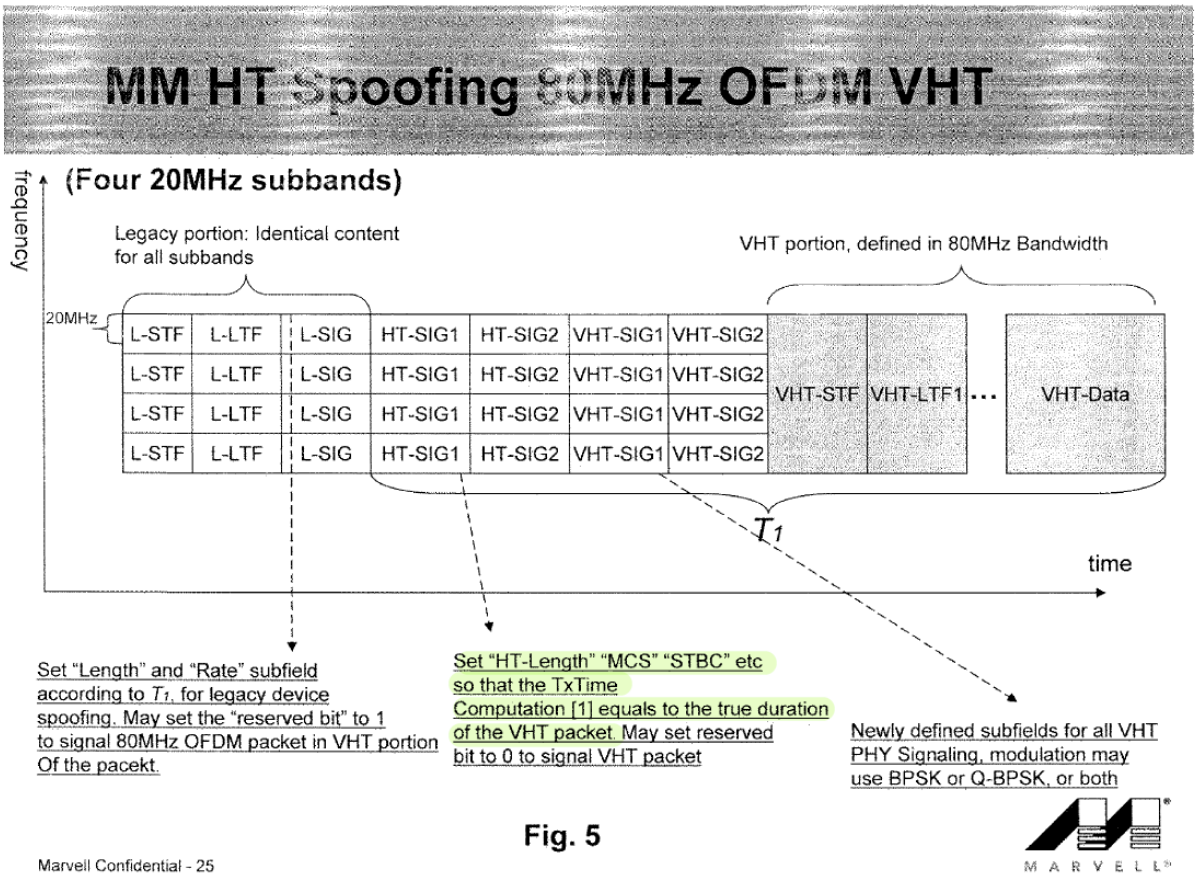

Fig. 5

INTEL-1019, 37, 40 ("'HT-LENGTH", "MCS", "STBC" subfield in HT-SIG fields should be set such that the TXTIME computation…equals to the true packet duration of the VHT packet."). In contrast, T_1 is not the "true duration" of the VHT data unit but includes the greenfield HT-SIG1 and HT-SIG2 conforming to the 802.11n protocol. *Id.* at 37. Zhang itself likewise explains that T_1 ***does not*** reflect the duration of the VHT data unit, explaining that "duration T1 … includes the HT-SIG**1**s **254** and the HT-SIG**2**s **258**." *See* INTEL-1017 [0103]; AXW-2001 ¶¶148-149.

Ignoring the substance of Figure 5 and the value of T_1 entirely, Intel instead looks to a different portion of '900PROV to, using hindsight, search for an instance

where the "L-SIG" field provides the "true length (T) of the VHT packet," landing on the mixed mode 80MHz OFDM VHT disclosure shown in Figures 1 and 2 of the '900PROV. *See* INTEL-1019, 20-21 (Figs. 1, 2) (setting length of L-SIG to T); *id.* 22 (describing setting L-SIG to length T in mixed mode 80MHz OFDM VHT disclosure whereby T equals the "true length…of the VHT packet"); *see* Pet. 53. But in Figures 1 and 2 of the '900PROV, there is no HT-SIG1 field. AXW-2001 ¶¶148-149. Intel cannot simply mix and match from an "amalgam of disclosures plucked selectively" from the '900PROV to find written description support for claim 1 of Zhang, as that claim requires a disclosure that includes use of ***three different communications protocols***. *See Novozymes A/S v. DuPont Nutrition Bioscis. APS*, 723 F.3d 1336, 1349 (Fed. Cir. 2013); *see also Flash-Control, LLC v. Intel Corp.*, No. 2020-2141, 2021 WL 2944592, at *4 (Fed. Cir. July 14, 2021) (no written description where claim elements are mapped to "different embodiments that are never linked together in the specification.")

In '900PROV's Figures 1 and 2, there are only *two* different communications protocols disclosed, but Element 1[A] and 1B together require *three* different protocols. Accordingly, Intel is unable to point to any disclosure in the '900PROV whereby a preamble is disclosed that shows use of three different data protocols, and includes a "first field" having information that indicates "the duration of the data unit." AXW-2001 ¶149.

2. Element 1[B]: preamble decodable under third protocol

Intel contends that a POSA "would have known" that the HT-SIG1 and HT-SIG2 fields shown in Figure 5 of the '900PROV "are decodable by 802.11n receivers ('*third communication protocol*')." Pet. 55-56. But again, Intel provides no reason how or why a POSA would have understood the HT-SIG1 and HT-SIG2 fields to be the claimed "third communication protocol," other than conclusory testimony from its expert, which is due no weight. *See* INTEL-1003 ¶¶157-58.

Intel's mapping of the claimed "third communication protocol" to the HT-SIG fields, and thus the 802.11n standard in the '900PROV is particularly egregious in view of Zhang's actual description of Figure 1 that maps the 802.11n standard to the "second communication protocol," and the 802.11a standard to the "third communication protocol." *See* INTEL-1017 [0064]; AXW-2001 ¶150. This critical difference between what Zhang describes as being the proper second and third communication protocols assigned in Figure 1, and those advanced by Intel and its expert, underscores that Intel has failed to show that the '900PROV discloses adequate written description support for claim 1 of Zhang. AXW-2001 ¶150.

3. Element 1[C]: determining data unit conforms to first protocol

Intel asserts that the '900PROV's disclosure of VHT-SIG1 and VHT-SIG2 fields are formatted to conform to the first communication protocol by "setting a 'reserved bit in VHT-SIG2 to 0 … to signal [to] VHT device[s] that the current

packet is a VHT packet." Pet. 56 (citing to INTEL-1019, 11). For support, Intel, again, mixes and matches from different ***proposals*** for ways to define a VHT-SIG field related to a mixed mode data unit—not the HT-spoofing proposal in Figure 5. *Id.* AXW-2001 ¶151. As noted above, Intel's selective plucking of an "amalgam of disclosures" in the '900PROV to read on claim 1 of Zhang is insufficient to show written description support. *See Novozymes*, 723 F.3d at 1349; *Flash-Control*, 2021 WL 2944592, at *4.

In so doing, Intel fails to consider the actual disclosures in the '900PROV that relate to the embodiment shown in Figure 5, which provide that either the reserved bit in L-SIG or in HT-SIG2 signal the presence of the VHT packet—not the reserved bit in the VHT-SIG2 field—and neither of which Intel attempts to map to the first communication protocol:

- L-SIG in Fig 5 may set the reserved bit to "1" to signal 11ac receiver the presence of VHT packet (i.e. VHT-SIG1,2 will follow HT-SIG2).
- May use the reserved bit in HT-SIG2 setting to 0, to signal the VHT packet presence (VHT-SIG following HT-SIG).
  - May not set this bit for a MM packet in Fig5, if L-SIG uses reserved bit setting to "1" to signal VHT packet.

INTEL-1019, 40; AXW-2001 ¶151.

Further, there is no indication that any of the approaches in the '900PROV were ever adopted for the 802.11ac standard (AXW-2001 ¶152), which did not exist when the '900PROV was filed in 2009, and it is therefore speculative that the VHT data unit would or could eventually conform to the 802.11ac standard.

4. Element 1[D]: data conforms to first protocol and not the second or third

For essentially the same reasons already discussed, Intel failed to show that '900PROV supports the three claimed protocols required by this claim element. AXW-2001 ¶153.

* * *

Accordingly, Intel failed to show that the '900PROV provides sufficient written description support for claim 1 of Zhang, and thus failed to meet its burden to show that Zhang is prior art to the '262 patent.

VI. The Board Should Exercise Discretion to Deny Institution Under 35 U.S.C. § 314 and *Fintiv*

The *Fintiv* factors overwhelmingly support denial of this tardy Petition, filed just weeks before the statutory deadline. Intel is undisputedly participating in the two parallel district court proceedings involving real parties in interest ("RPIs") Dell and Lenovo (Pet. 89-90), and those two separate cases are moving rapidly towards two separate and complete jury trials that will take place in April and July 2024, ten and seven months, respectively, before any anticipated final written decision from the Board. *See* Factor 2 below.

Despite these looming trial dates, Intel gives *Fintiv* the back of its hand, with a conclusory assertion of "compelling merits" and relying on its late-filed venue motions. Pet. 89. Intel provides no authority or evidence showing the trials will not

happen on schedule, and fails to take into account median time-to-trial statistics. Even worse, Intel offers no stipulation whatsoever, despite the undisputed overlap between this IPR and the two district court litigations.

Accordingly, the Board should exercise its discretion and deny this tardy Petition under § 314(a), as all of the *Fintiv* factors favor denial.

A. Factor 1 (Stay) Favors Denial

Trial is imminent and no party has moved to stay despite the looming trial dates. Even if they had, courts in the Eastern District of Texas will not grant a stay in this situation. *E.g.*, *MyPort, Inc. v. Samsung Elecs. Co.*, No. 2:22-CV-00114-JRG, Order at 4-5 (E.D. Tex. June 13, 2023) (Dkt. No. 73) (denying motion to stay pending instituted IPR proceeding "[g]iven the substantial amount of work and financial resources already poured into this case"); *Koninklijke KPN N.V. v. Telefonaktiebolaget LM Ericsson*, No. 2:21-CV-00113-JRG, Order at 4-5 (E.D. Tex. July 7, 2022) (Dkt. No. 215) (similar).

Accordingly, this factor weighs in favor of denial, or is neutral at worst.

B. Factor 2 (Trial Date Proximity) Strongly Favors Denial

Petitioner Intel and the named RPIs will participate in *two* jury trials shortly after institution, weighing heavily in favor of denial.

First, the Dell trial will begin in April 2024—less than two months after institution, and *ten months* before this IPR's final written decision. AXW-2017 (Oct.

23, 2023 Dell Docket Control Order) 1. The Lenovo trial will be in July 2024, *seven months* before the final written decision. AXW-2018 (Oct. 31, 2023 Lenovo Docket Control Order) 1. Accordingly, this factor "weighs heavily in favor of discretionary denial." *See Zhuhai Cosmx Battery Co. v. Ningde Amperex Tech. Ltd.*, IPR2023-00587, Paper 12 at 10-11 (Sept. 22, 2023).

Second, the same result is reached if considering the median time-to-trial statistics instead. The median time to a jury trial in the Eastern District of Texas before Judge Schroeder is just over thirty months. AXW-2020 (Schroeder milestones). The Dell litigation has been pending since June 2022, and thus even if the district court took thirty months to reach trial, the jury trial would occur in December 2024, two months before the projected final written decision date. Likewise the Lenovo litigation has been pending since July 2022, and thus even if the district court took thirty months to reach trial, that date would fall in January 2025, one month before the projected final written decision date.

Although Intel argues that both deadlines are "tentative" in view of pending motions to transfer and improper venue, Pet. 89, the district court has since denied Dell's motion to transfer. AXW-2021 (Dell Docket Report) at Dkt. No. 142 (denying motion to transfer). And the Lenovo motion to transfer was filed late in the district court case on October 11, 2023, after the Court denied its motion to dismiss for lack of jurisdiction. *See* AXW-2022 (Lenovo Docket Report) at Dkt.

No. 110 (R&R denying motion to dismiss); Dkt. No. 119 (adopting R&R); Dkt. No. 122 (motion to transfer). There is thus no reason to suspect that the court will grant Lenovo's motion. Further, Intel and the named RPIs have not asked the court to delay either of the two trials, and there is no indication that it will. To the contrary, the district court just issued amended Docket Control Orders in both cases, confirming that trial will occur on April 15, 2024 in the Dell case and July 15, 2024 in the Lenovo case. AXW-2017, AXW-2018. The Board should reject Intel's invitation to speculate that the court will grant *both* of these late-filed procedural motions or otherwise delay *both* of these two scheduled trials.

Accordingly, this factor strongly favors denial.

C. Factor 3 (Investment) Strongly Favors Denial

There is no dispute that the level of investment in the district court proceedings is already high and will be even higher at the time of institution. Given that the parallel district court cases are *both* at advanced stages, this factor weighs strongly in favor of denying institution.

In RPI Dell's case, claim construction briefing concluded on October 13, 2023, and the court held its *Markman* hearing on November 16, 2023. Fact discovery is set to close in December 2023, and expert discovery concludes in January 2024—a month before any expected institution decision. *See* AXW-2017. Contentions were

exchanged on November 3, 2022 (infringement) and January 23, 2023 (invalidity), over six months before the Petition was filed.

In RPI Lenovo's case, the court likewise held its claim construction hearing on November 16, 2023, fact discovery closes in March 2024, and expert discovery closes in May 2024. Contentions were exchanged on January 5, 2023 (infringement) and on March 2, 2023 (invalidity). AXW-2018. As such, both the district court and the parties will have invested heavily in the district court actions prior to any institution decision. Intel has no response, except its aforementioned speculation that trial will be delayed—which does not bear on this factor.

Intel's lack of diligence further favors denial. Intel waited until just weeks before its one-year deadline to file its challenge, instead of "expeditiously" filing its Petition, "such as promptly after becoming aware of the claims being asserted." *Apple Inc. v. Fintiv, Inc.*, IPR2020-00019, Paper 11 at 11-12 (Mar. 20, 2020) (precedential) ("*Fintiv*").

Accordingly, this factor favors denial.

D. Factor 4 (Overlap) Undisputedly and Strongly Favors Denial

Intel does not dispute the extensive overlap between this IPR and the two district court cases. Pet. 89 (not even mentioning factor 4). Indeed, the grounds in this Petition are either identical to or variations of the invalidity challenges presented in the invalidity contentions for the Dell and Lenovo actions. For example,

Petitioner's invalidity contentions in the Dell case assert combinations of the TGn Sync Proposals and the July 2005 WWiSE reference that are substantively identical to the proposed Hansen-July 2005 WWiSE ground in the Petition. AXW-2023 (Dell Invalidity Contentions). The second ground challenging the claims in view of the combination of Zhang and Maltzev is identical to the prior art raised in district court. AXW-2023.

Further, Intel and its two named RPIs (Dell and Lenovo) have not offered any kind of stipulation to avoid duplicative proceedings. Accordingly, this factor undisputedly and strongly weighs in favor of denying institution under *Fintiv*.

E. Factor 5 Undisputedly Favors Denial

Petitioner Intel and RPIs Dell and Lenovo are undisputedly parties to, or at least participating in, the two Texas litigations. Accordingly, this factor favors denial. Pet. 89-90 (not challenging this factor, and admitting the Lenovo and Dell litigations are the relevant litigations).

Accordingly, this factor undisputedly favors denial.

F. Factor 6 (Other) Favors Denial

Other circumstances that favor denial are the merits and fairness. Neither one favors institution.

In particular, the merits of the Petition are weak for multiple reasons, as set forth in this preliminary response. As noted by the Director in *CommScope*, the

standard for finding a compelling meritorious challenge "is a higher standard than the standard for institution set by statute." *CommScope Techs. LLC v. Dali Wireless, Inc.*, IPR2022-01242, Paper 23 at 3 (Feb. 27, 2023). Accordingly, even if the Board finds that Intel has established a reasonable likelihood of success, such a finding alone is not enough to warrant institution when balanced against the remaining *Fintiv* factors.

Accordingly, this factor favors denial.

* * *

The Board should deny institution under § 314(a) because all of the *Fintiv* factors favor, or strongly favor, denial.

VII. Conclusion

For the reasons set forth above, the Board should deny the Petition for *Inter Partes* Review.

Respectfully submitted,

Dated: November 17, 2023

By: / S. Giri Pathmanaban /

S. Giri Pathmanaban (Reg. No. 75,986)
giri.pathmanaban@lw.com
Latham & Watkins LLP
300 Colorado Street, Suite 2400
Austin, TX 78701-3295
Telephone: 737.910.7300
Fax: 737.910.7301

Counsel for Patent Owner
AX Wireless, LLC

CERTIFICATE OF COMPLIANCE WITH 37 C.F.R. § 42.24

I hereby certify that this Patent Owner's Preliminary Response complies with the word count limitation of 37 C.F.R. § 42.24(b) because the Patent Owner's Preliminary Response contains 13,196 words using Microsoft Word's counting feature, excluding the cover page, signature block, and the parts of the Patent Owner's Preliminary Response exempted by 37 C.F.R. § 42.24(b).

By: / S. Giri Pathmanaban /

S. Giri Pathmanaban (Reg. No. 75,986)
giri.pathmanaban@lw.com
Latham & Watkins LLP
300 Colorado Street, Suite 2400
Austin, TX 78701-3295
Telephone: 737.910.7300
Fax: 737.910.7301

Counsel for Patent Owner
AX Wireless, LLC

CERTIFICATE OF SERVICE

Pursuant to 37 C.F.R. § 42.6(e), I certify that on this 17th day of November, 2023, a true and correct copy of the foregoing **Patent Owner's Preliminary Response and all Exhibits** were served by electronic mail on Petitioner's lead and backup counsel at the following email addresses:

Lori A. Gordon (Reg. No. 50,633)
Perkins Coie LLP
700 Thirteenth St. NW, Suite 800
Washington, DC 20005
Gordon-ptab@perkinscoie.com
Tel.: 202.661.5883
Fax: 202.624.9543

Jonathan R. Carter (Reg. No. 75,145)
Perkins Coie LLP
1155 Avenue of the Americas, 22nd Floor
New York, New York 10036
Carter-ptab@perkinscoie.com
Tel.: 212.261.6826
Fax: 212.977.1649

Matthew W. Hindman (Reg. No. 57,396)
Perkins Coie LLP
3150 Porter Drive
Palo Alto, CA 94304-1212
Hindman-ptab@perkinscoie.com
Tel.: 650.838.4300
Fax: 650.838.4350

By: / S. Giri Pathmanaban /

S. Giri Pathmanaban (Reg. No. 75,986)
giri.pathmanaban@lw.com
Latham & Watkins LLP
300 Colorado Street, Suite 2400

Austin, TX 78701-3295
Telephone: 737.910.7300
Fax: 737.910.7301

Counsel for Patent Owner
AX Wireless, LLC