IEEE P802.11
Wireless LANs

WWiSE Proposal: High throughput extension to the 802.11 Standard

Date: 2005-01-06

Author(s):

Name	Company	Address	Phone	email
Cenk Kose	Conexant Systems	9868 Scranton Rd. San Diego, CA 92121 USA	+1 858 713 3258	cenk.kose@ conexant.com
Bruce Edwards	Broadcom Corporation	25 Burlington Mall Road, Suite 300, Burlington, MA 01803 USA	+1 781 229 7391	bedwards@broad com.com

Abstract

Changes and additions to IEEE Std. 802.11-1999 (Reaff 2003), as amended by published amendments IEEE802.11a, IEEE802.11g, IEEE802.11h and IEEE802.11i and by IEEE draft standard 802.11e/D9.0 are provided to support a new high throughput physical layer (PHY) for operation in the 2.4 and 5 GHz bands.

Notice: This document has been prepared to assist IEEE 802.11. It is offered as a basis for discussion and is not binding on the contributing individual(s) or organization(s). The material in this document is subject to change in form and content after further study. The contributor(s) reserve(s) the right to add, amend or withdraw material contained herein.

Release: The contributor grants a free, irrevocable license to the IEEE to incorporate material contained in this contribution, and any modifications thereof, in the creation of an IEEE Standards publication; to copyright in the IEEE's name any IEEE Standards publication even though it may include portions of this contribution; and at the IEEE's sole discretion to permit others to reproduce in whole or in part the resulting IEEE Standards publication. The contributor also acknowledges and accepts that this contribution may be made public by IEEE

AX Wireless, LLC
Exhibit AXW-2028
Intel v. AX Wireless
IPR2023-01143
AXW-2028-001

Contributors

John Chang, Ralink

Jeng-Hong Chen, Winbond

Keith Chugg, TrellisWare

Sean Coffey, Realtek

Dennis Connors, Texas Instruments

Gabriella Convertino, STMicroelectronics

Marc de Courville, Motorola

Bruce Edwards, Broadcom

Matthew Fischer, Broadcom

Guido Frederiks, Airgo

James Gardner, Airgo Networks

Paul Gray, TrellisWare

Srikanth Gummadi, Texas Instruments

Chris Hansen, Broadcom

Dave Hedberg, Conexant

Takashi Ishidoshiro, Buffalo

Taehyun Jeon, ETRI

VK Jones, Airgo Networks

Pansop Kim, Winbond

Young Kim, Bermai

Cenk Kose, Conexant

Shang Lee, Ralink

Sok-kyu Lee, ETRI

Alfred Lin, Winbond

Tushar Moorti, Broadcom

Formatted: Font: (Default) Times New Roman, Complex Script Font: Times New Roman, French (France)

AXW-2028-002

Mike Moreton, STMicroelectronics

Markus Muck, Motorola

Fabio Osnato, STMicroelectronics

Pratima Pai, STMicroelectronics

Tom Pare, Ralink

Wei-Chung Peng, Winbond

Steve Pope, Texas Instruments

Ali Raissinia, Airgo Networks

Alexandre Ribeiro-Dias, Motorola

Stéphanie Rouquette-Léveil, Motorola

Vincenzo Scarpa, STMicroelectronics

Michael Seals, Conexant

Sébastien Simoens, Motorola

Manoneet Singh, Texas Instruments

Massimiliano Siti, STMicroelectronics

Stephan ten Brink, Realtek

Jason Trachewsky, Broadcom

David Tung, Ralink

Richard van Nee, Airgo Networks

Allert van Zelst, Airgo Networks

George Vlantis, STMicroelectronics

Bob Ward, TrellisWare

Mark Webster, Conexant

Menzo Wentink, Conexant

Richard Williams, Texas Instruments

Formatted: Font: (Default) Times New Roman, Complex Script Font: Times New Roman

Formatted: English (United States)

Formatted: English (United States)

Formatted: English (United States)

Formatted: English (United States)

Chris Young, Broadcom

Heejung Yu, ETRI

Formatted: English (United States)

AXW-2028-004

Contents

Contributors 1
Contributors 2
3. Definitions 12
4. Abbreviations and acronyms 13
6. MAC Service Definition 13
6.1 Overview of MAC services 14
6.1.4 Data service architecture (informative) 14
6.2 Detailed service specification 15
6.2.1 MAC data services 15
6.2.1.1 MA-UNITDATA.request 15
7. Frame Formats 16
7.1 MAC frame formats 16
7.1.2 General frame format 16
7.1.3 Frame fields 16
7.1.3.5 QoS Control field 16
7.2 Format of individual frame types 17
7.2.1 Control Frames 17
7.2.1.7 Block Acknowledgement Request (BlockAckReq) frame format 17
7.2.1.8 Block Acknowledgement (BlockAck) frame format 17
7.2.2 Data Frames 18
7.2.3 Management frames 19
7.2.3.1 Beacon frame format 19
7.2.3.9 Probe Response frame format 20
7.3 Management frame body components 20
7.3.1 Fixed fields 20
7.3.1.4 Capability Information field 20

7.3.1.11 Action Field 21
7.3.2 Information Elements 21
7.3.2.13 ERP Information element 21
7.3.2.25 Channel Set 25
7.4.5 High Throughput action details 25
7.4.5.1 Mode Request frame format 26
7.4.5.2 Mode Response frame format 26
7.4.5.3 MIMO Channel Request frame format 27
7.4.5.4 MIMO Channel Response frame format 27
9. MAC sublayer functional description 28
9.1 MAC architecture 28
9.1.4 MSDU aggregation 28
9.1.6 HTP Burst Transmission overview 30
9.2 DCF 30
9.2.3 Interframe Space (IFS) 30
9.2.3.1 RIFS 31
9.2.12 Determination of PLME aCWmin characteristics 31
9.6 Multirate support 31
9.6.1 Modulation Classes 31
9.9 HCF 32
9.9.1 HCF contention-based channel access (EDCA) 32
9.9.1.4 Multiple frame transmission in an EDCA TXOP 32
9.9.2 HCF controlled channel access 32
9.9.2.1 HCF controlled channel access procedure 32
9.9.2.2 TXOP structure and timing 33
9.10 Block acknowledgment 33
9.10.1 Introduction (Informative) 33

AXW-2028-006

9.10.3 Data and acknowledgement transfer 33
9.12 Frame exchange sequences 34
9.13 Protection mechanism 34
9.13.1 OFDM Protection 34
9.13.2 20MHz Protection 35
9.14 40 MHz Channel Pairs 36
9.14.1 40 MHz Fundamentals of Operation 36
9.14.2.1 Secondary Channel Beacon 37
9.14.3 Beacon Transmission 37
9.14.4 Limits on Channel Numbering 37
10. Layer management 37
10.4 PLME SAP interface 38
10.4.3 PLME_CHARACTERISTICS.confirm 38
10.4.3.2 Semantics of the service primitive 38
10.4.4 PLME-DSSSTESTMODE.request 38
10.4.4.2 Semantics of the service primitive 38
20. High throughput PHY specification for the 2.4 and 5 GHz bands 40
20.1 Overview 40
20.1.1 Introduction 40
20.1.2 Operational Modes 40
20.1.3 Scope 40
20.1.4 MIMO-OFDM PHY functions 41
20.2 PHY-specific service parameter list 41
Table 001—TXVECTOR parameters 41
Table 002—RXVECTOR parameters 42
20.3 MIMO-OFDM PLCP sublayer 43
20.3.1 Introduction 43

20.3.2 PLCP frame format....43
20.3.2.1 Overview of the PPDU encoding process....45
20.3.2.2 RATE-dependent parameters....46
Table 003—Rate-dependent parameters for 20 MHz, N_{SS} = 2 (N_{ES} = 1) 47
Table 004—Rate-dependent parameters for 20 MHz, N_{SS} = 3 (N_{ES} = 1) 47
Table 005—Rate-dependent parameters for 20 MHz, N_{SS} = 4 (N_{ES} = 1) 47
Table 006—Rate-dependent parameters for 40 MHz, N_{SS} = 1 (N_{ES} = 1) 47
Table 007—Rate-dependent parameters for 40 MHz, N_{SS} = 2 (N_{ES} = 1) 48
Table 008—Rate-dependent parameters for 40 MHz, N_{SS} = 3 (N_{ES} = 2) 48
Table 009—Rate-dependent parameters for 40 MHz, N_{SS} = 4 (N_{ES} = 2) 48
20.3.2.3 Timing related parameters 49
Table 010—Timing-related parameters....49
20.3.2.4 Mathematical conventions in the signal descriptions....49
20.3.3 PLCP preamble (SYNC)....50
20.3.4 Signal fields (SIG-N and SIG-MM) 56
Table 011—SIG-N field bit assignment 57
20.3.5 DATA field....58
20.3.5.1 Service field (SERVICE)....58
20.3.5.2 PPDU tail bits 58
20.3.5.3 PAD bits 59
20.3.5.4 PLCP data scrambler and descrambler 59
20.3.5.5 Convolutional encoder....59
20.3.5.6 Interleaver....60
Table 012—Interleaving parameters 60
20.3.5.7 Low density parity check codes (optional ECC)....61
20.3.5.7.1 LDPCC Code Rates and Block Sizes....61
Table 013— LDPCC parameters....61

20.3.5.7.3 LDPCC PPDU encoding process 61
20.3.5.7.4 LDPCC Encoder 63
20.3.5.7.5 Parity check matrix 64
20.3.5.8 Subcarrier modulation mapping 65
20.3.5.9 NTX-SDM (Spatial Data Multiplexing) Modes 65
20.3.5.9.1 Pilot tones for the NTX-SDM modes 65
Table 014—Pilot value sent from *m*th antenna during *n*th OFDM symbol in 20 MHz N_{TX}-SDM modes.66
Table 015—Pilot value sent from *m*th antenna during *n*th OFDM symbol in 40 MHz N_{TX}-SDM modes.66
20.3.5.9.2 Data tones in NTX-SDM modes 68
20.3.5.10 NTX-STBC (Space-Time Block Coding) Modes 68
Table 016—The *g* function used in antenna selection for 3TX-STBC modes. 69
Table 017—The *h* function used in antenna selection for 4TX-STBC modes. 69
Table 018—Pilot value sent from *m*th antenna during *n*th OFDM symbol in 20 MHz N_{TX}-STBC modes.69
Table 019—Pilot value sent from *m*th antenna during *n*th OFDM symbol in 40 MHz N_{TX}-STBC modes.69
Table 020—Rate-dependent parameters for 20 MHz, NTX-STBC modes with N_{SS} = 1 70
Table 021- Data tone indices as a function of subcarrier indices in 20 MHz modes. 70
Table 022— Data tone indices as a function of subcarrier indices in 40 MHz modes. 70
Table 023— NTX-STBC-mode encoding rules for N_{TX}=2, 3, 4 and N_{SS}=1 71
20.3.6 Clear channel assessment 73
20.3.7 PLCP data modulation and modulation rate change 74
20.3.8 PMD operating specifications 74
20.3.8.1 TX Block diagram 74
20.3.8.2 Regulatory requirements 74
20.3.8.3 Operating channel frequencies 74
20.3.8.4 Spurious emissions 75
20.3.8.5 TX RF delay 75
20.3.8.6 Slot time 75

20.3.8.7 Transmit and receive antenna port impedance 75
20.3.8.8 Transmit and receive operating temperature range 75
20.3.9 PMD TX specifications 75
20.3.9.1 TX power levels 75
20.3.9.2 TX spectrum mask 76
20.3.9.3 TX spurious 76
20.3.9.4 TX center frequency tolerance 76
20.3.9.5 TX symbol clock frequency tolerance 76
20.3.9.6 Modulation accuracy 76
20.3.9.6.1 TX center frequency leakage 77
20.3.9.6.2 TX spectral flatness 77
20.3.9.6.3 TX constellation error 77
Table 020—Allowed relative constellation error versus constellation type and code rate 77
20.3.9.7 TX modulation accuracy (EVM) test 77
20.3.10 PMD RX specifications 79
20.3.10.1 RX minimum input level sensitivity 79
Table 021—Receiver minimum input level sensitivity 79
20.3.10.2 RX maximum input level 80
20.3.10.3 CCA sensitivity 80
20.3.11 PLCP TX procedure 80
20.3.12 PLCP RX procedure 82
20.4 MIMO-OFDM PMD operating specifications 87
20.4.1 PLME_SAP sublayer management primitives 87
20.4.2 MIMO-OFDM management information base 87
Table 20.4.2T1 MIB attribute default values/ranges 87
20.4.3 MIMO-OFDM TXTIME calculation 88
20.4.4 MIMO-OFDM PHY characteristics 89

Table 20.4.4.1—MIMO-OFDM PHY characteristics 89
20.5 MIMO-OFDM operating specifications 90
20.5.1 Scope and field of application 90
20.5.2 Overview of service 90
20.5.3 Overview of interactions 90
20.5.4 Basic services and options 90
20.5.4.1 PMD_SAP peer-to-peer service primitives 90
Table 20.5.4.1 PMD_SAP peer-to-peer services 90
20.5.4.2 PMD_SAP sublayer-to-sublayer service primitives 90
Table 19.9.4.2 PMD_SAP sublayer-to-sublayer services 91
20.5.4.3 PMD_SAP service primitive parameters 91
Table 20.5.4.3 List of parameters for the PMD primitives 91
20.5.5 PMD_SAP detailed service specification 92
20.5.5.1 PMD_DATA.request 92
20.5.5.2 PMD_DATA.indicate 92
20.5.5.3 PMD_TRANSMISSION_MODE.request 93
20.5.5.4 PMD_TXSTART.request 93
20.5.5.5 PMD_TXEND.request 93
20.5.5.6 PMD_ANTSEL.request 93
20.5.5.7 PMD_TXPRWLVL.request 93
20.5.5.8 PMD_DATARATE.request 93
20.5.5.9 PMD_RSSI.indicate 93
Annex A – LDPC Matrix Definitions 130
Annex B – Closed Loop Information Exchange 135

Draft Amendment to IEEE Standard for Information technology-
Telecommunications and information exchange between systems -
Local and metropolitan area networks -
Specific Requirements -

Part 20: Wireless LAN Medium Access Control (MAC) and Physical Layer (PHY) specifications:

High throughput extension for the 2.4 GHz and 5 GHz Bands

[This amendment is based on IEEE Std 802.11™, 1999 Edition (Reaff 2003), as amended by IEEE Std 802.11a™-1999 and IEEE Std 802.11g™-2003, and Draft Amendment IEEE P802.11e/D9.0]

3. Definitions

Insert the following new definitions in alphabetical order, renumbering as necessary:

20 MHz transmission: A frame transmission in which the modulation spans only one of the 20 MHz channels of a 40 MHz Channel Pair.

40 MHz channel pair: A pair of 20 MHz channels whose centre frequencies are separated by 20 MHz and which can be treated as a single channel for 40 MHz transmissions by a BSS, and where one of the 20 MHz channels will also be used for (non-overlapping) 20 MHz transmissions by the BSS.

40 MHz transmission: A frame transmission in which the modulation spans both 20 MHz channels of a 40 MHz channel pair.

aggregated MSDU (A-MSDU): A MSDU that encapsulates one or more MSDUs to be transmitted to the same destination.

aggregated PPDU (A-PPDU): A PPDU that contains one or more pairs of PLCP headers and PSDUs.

HTP burst transmission: A sequence of frames transmitted by a single high-throughput station in a single medium access. The frames may be transmitted as part of an A-PPDU, or with reduced interfame spacing to enhance medium efficiency.

primary channel: The channel in a 40 MHz channel pair that will be used for 20 MHz transmissions as well as being part of the 40 MHz channel for 40 MHz transmissions.

secondary channel: The channel in a 40 MHz channel pair that is used only as part of the 40 MHz channel for 40 MHz transmissions, and which is not used for 20 MHz transmissions.

HTP rate group: A group of rates supported by an HTP STA that use the same transmit bandwidth, the same number of transmit antennas, and the number of spatial streams.

HTP STA: A STA which conforms to the minimum mandatory requirements set forth in clause 20.

40MHz HTP rate: Any rate supported by an HTP STA that uses 40MHz of transmit bandwidth.

20MHz HTP STA: An HTP STA which does not support any 40MHz HTP rate.

40MHz HTP STA: An HTP STA which supports the ability to receive at least one 40MHz HTP rate.

MIMO-OFDM: Multiple input multiple output orthogonal frequency division multiplexing

4. Abbreviations and acronyms

Insert the following acronyms alphabetically in the list in Clause 4:

A-MSDU	aggregated MSDU
A-PPDU	aggregated PPDU
ECC	error correction code
HT	high throughput
HTP	high-throughput PHY conforming to Clause 20
LDPCC	low density parity check code
MIMO	multiple input multiple output
nHTP	non HTP PHY conforming to Clause 15 or Clause 17 or Clause 18 or Clause 19, but not to Clause 20
RIFS	reduced interframe space
SDM	spatial data multiplexing
STBC	space time block code

6. MAC Service Definition

6.1 Overview of MAC services

6.1.4 Data service architecture (informative)

Change the paragraph in 6.1.4 (.11e) as shown:

The MAC data plane architecture (i.e., processes that involve transport of all or part of an MSDU) is shown in Figure 11g. During transmission, an MSDU goes through some or all of the following processes: frame delivery deferral during power save mode, aggregation, sequence number assignment, fragmentation, encryption, integrity protection, and frame formatting. IEEE 802.1X may block the MSDU at the Controlled Port. At some point the Data frames that contain all or part of the MSDU are queued per access category/TS. This queuing may be at any of the three points indicated in Figure 11g.
During reception, a received data frame goes through processes of MPDU header + cyclic redundancy codecheck (CRC) validation, duplicate removal, possible reordering if the Block Ack mechanism is used, decryption, defragmentation, integrity checking, de-aggregation, and replay detection. After replay detection (or defragmentation if security is used), the MSDU is delivered to the MAC_SAP or to the DS. The IEEE 802.1X Controlled/ Uncontrolled Ports discards the MSDU if the Controlled Port is not enabled or if the MSDU does not represent an IEEE 802.1X frame. TKIP and CCMP MPDU frame order enforcement occurs after decryption, but prior to MSDU defragmentation; therefore, defragmentation will fail if MPDUs arrive out of order.

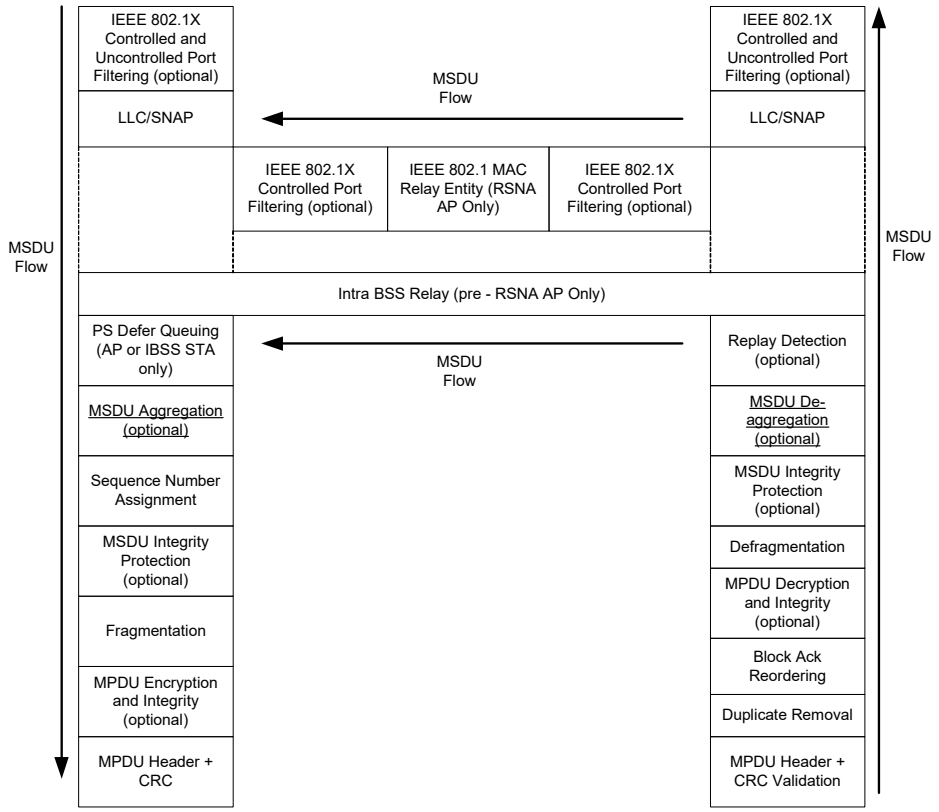

Figure 11g – MAC data plane architecture

6.2 Detailed service specification

6.2.1 MAC data services

6.2.1.1 MA-UNITDATA.request

6.2.1.1.2 Semantics of the service primitive

Change the third from the last paragraph as follows:

The data parameter specifies the MSDU to be transmitted by the MAC sublayer entity. For IEEE 802.11, the length of the MSDU ~~must~~shall be less than or equal to ~~2304~~ 8100 octets when a PHY defined in Clause 20 is employed or 4000 when a PHY defined in Clause 17 is employed.

7. Frame Formats

7.1 MAC frame formats

7.1.2 General frame format

Change Figure 12(.11e) as follows:

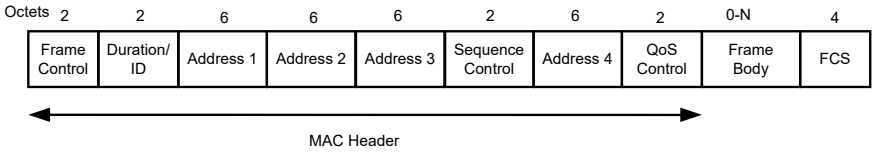

Figure 12 – MAC frame format

The maximum frame body length, N, is 8100 when a Clause 20 PHY is employed, and 4000 when a Clause 17 PHY is employed.

7.1.3 Frame fields

7.1.3.5 QoS Control field

Change Table 3.1 in 7.1.3.5 (.11e) to appear as follows:

Table 3.1 – QoS Control field

Applicable Frame (sub) Types	Bits 0-3	Bit 4	Bit 5-6	Bit 7	Bits 8-15
QoS (+)CF-Poll frames sent by HC	TID	EOSP	Ack Policy	Reserved	TXOP limit
QoS Data and QoS Data+CF-Ack frames sent by HC	TID	EOSP	Ack Policy	Aggregated MSDU Present	QAP PS Buffer State
QoS Null, QoS CFAck frames sent by HC	TID	EOSP	Ack Policy	Reserved	QAP PS Buffer State
QoS data type frames sent by non-AP QSTAs	TID	0	Ack Policy	Aggregated MSDU Present	TXOP duration requested
	TID	1	Ack Policy	Aggregated MSDU Present	Queue size

7.2 Format of individual frame types

7.2.1 Control Frames

7.2.1.7 Block Acknowledgement Request (BlockAckReq) frame format

Change the diagram of the BAR control field of 7.2.1.7 to appear as follows:

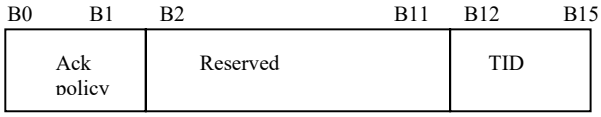

Figure 21.2– BAR Control Field

Insert the following text and table immediately after Figure 21.2 within clause 7.2.1.7:

The ACK Policy subfield of the BAR Control field contains the ACK policy for the BlockAckReq frame. The ACK policy subfield bits shall have the meaning indicated in table 3.3:

Bits in BAR Control field Bit 0 Bit 1	Meaning
0 0	Normal acknowledgement. The addressed recipient returns an ACK as defined in 9.2.8 or a Block Acknowledgement frame after a SIFS period, according to the previously negotiated block ack policy as described in 11.5. The Ack Policy field is set to this value in all directed Block Ack Request frames in which the sender requires immediate acknowledgement, including those requiring an immediate Block Acknowledgement.
1 0	No Acknowledgement The addressed recipient performs no immediate response action upon receipt of the frame. More details are provided in 9.11. The Ack Policy is set to this value in all BlockAckReq frames in which the sender does not require immediate, explicit acknowledgement.
0 1	Reserved
1 1	Reserved

Table 3.3

7.2.1.8 Block Acknowledgement (BlockAck) frame format

Change the diagram of the BA control field of 7.2.1.8 to appear as follows:

The BA control field defined in Figure 21.5 consists of the TID and Ack Policy subfields as shown in figure 21.5.

B0 B1	B2 B11	B12 B15
Ack policy	Reserved	TID

Figure 21.5 – BA Control Field

Insert the following text and table immediately after Figure 21.5 within clause 7.2.1.8:

The ACK Policy subfield of the BA Control field contains the ACK policy for the Block Acknowledgement frame. The ACK policy subfield bits shall have the meaning indicated in table 3.4:

Bits in BAR Control field	Meaning
Bit 0 Bit 1	
0 0	Normal acknowledgement. The addressed recipient returns an ACK as defined in 9.2.8 after a SIFS period. The Ack Policy field is set to this value in all directed Block Acknowledgement frames in which the sender requires immediate acknowledgement.
1 0	No Acknowledgement The addressed recipient performs no immediate response action upon receipt of the frame. More details are provided in 9.11. The Ack Policy is set to this value in all Block Acknowledgement frames in which the sender does not require immediate, explicit acknowledgement.
0 1	Reserved
1 1	Reserved

Table 3.4

7.2.2 Data Frames

Change the text, figures and tables in 7.2.2 (.11e) as shown:

The frame format for a Data frame is dependent on the QoS subfield of the subtype field and is as defined in Figure 22.

Octets: 2	2	6	6	6	2	6	2	0 - 8100	4
Frame Control	Duration/ ID	Address 1	Address 2	Address 3	Sequence Control	Address 4	QoS Control	Frame Body	FCS

MAC Header

Figure 22 – Data frame

Change the definitions as follows:

The DA is the destination of the A-MSDU or MSDU (or fragment thereof) in the frame body field.

The SA is the address of the MAC entity which initiated the A-MSDU or MSDU (or fragment thereof) in the frame body field.

7.2.3 Management frames

7.2.3.1 Beacon frame format

Insert the Channel Set entry and change the notes in Table 5(.11g) to read as follows:

Order	Information	Notes
7	DS Parameter Set	The DS Parameter Set information element is present within Beacon frames generated by STAs using Clause 15, Clause 18 and Clause 19 PHYs and by STAs using Clause 20 PHYs while operating in the 2.4GHz band.
15	Channel Set	The Channel Set information element is present within Beacon frames generated by APs using a Clause 20 PHY operating on a 40 MHz channel pair
19	ERP Information	The ERP Information element is present within Beacon frames generated by STAs using ERP PHYs and HTP PHYs and is optionally present in other cases.

Add a new clause 7.2.3.1.1 immediately after the existing clause 7.2.3.1 "Beacon Frame Format"

7.2.3.1.1 Secondary Channel Beacon Format

An AP with a Clause 20 PHY operating on a 40 MHz channel pair may send a Beacon frame on the secondary channel as described in clause 9.13.2.1. In contrast to the normal sending of Beacon frames, the aim of sending a Beacon frame on the secondary channel is to discourage use of that channel (other than as the secondary channel of the 40 MHz channel pair) and as a result, the required frame body is substantially different.

The contents of the fields of the Beacon frame sent on the secondary channel shall be the same as those of the Beacon frame sent on the primary channel, with the exceptions noted below.

The Supported Rate Set Information Element shall consist of a single Clause 20 rate, marked as a basic rate.

Table 7.2.3.1.1T1 – Beacon Frame Body when used as a Secondary Channel Beacon

Order	Information	Notes
1	Timestamp	
2	Beacon Interval	
3	Capability	
4	Service Set	

	Identifier (SSID)	
5	Supported Rate Set	
6	CF Parameter Set	May optionally be included to further discourage use of this channel.
5	Channel Set	

7.2.3.9 Probe Response frame format

Insert the Channel Set entry and change the notes in Table 12(.11g) to read as follows:

Order	Information	Notes
7	DS Parameter Set	The DS Parameter Set information element is present within Probe Response frames generated by STAs using Clause 15, Clause 18 and Clause 19 PHYs and by STAs using Clause 20 PHYs while operating in the 2.4GHz band.
11	Channel Set	The Channel Set information element is present within Probe Response frames generated by APs using a Clause 20 PHY operating on a 40 MHz Channel Pair
18	ERP Information	The ERP Information element is present within Probe Response frames generated by STAs using ERP PHYs and HTP PHYs and is optionally present in other cases.

7.3 Management frame body components

7.3.1 Fixed fields

7.3.1.4 Capability Information field

Change the second paragraph in 7.3.1.4(.11e) as shown:

The length of the Capability Information field is 2 octets. The format of the Capability Information field is defined as illustrated in Figure 27. No subfield is supplied for ERP as a STA supports ERP operation if it includes all the clause 19 mandatory rates in its supported rate set. No subfield is supplied for HTP (STAs employing a

Clause 20 PHY), as a STA supports HTP operation if it includes all of the Clause 20 mandatory rates in its supported rate set.

7.3.1.11 Action Field

Add the following rows to Table 19A to:

Name	Value	See Subclause
High Throughput	4	7.4.5

7.3.2 Information Elements

Add a new row to Table 20 "Element IDs" as follows, and adjust reserved ids appropriately

Channel Set	XXX-To be assigned by ANA before letter ballot

Add the following text to the end of clause 7.3.2 after the table of Element IDs

Individual information elements may be extended in length by future versions of this standard by adding new fields to the end of an existing information element. STAs shall ignore any additional information beyond the expected end of an Information Element, and shall treat any such information element as legal.

7.3.2.13 ERP Information element

Change the text of clause 7.3.2.13(.11g) as follows:

~~The ERP Information element contains information on the presence of Clause 15 or Clause 18 stations in the BSS that are not capable of Clause 19 (ERP-OFDM) data rates. It also contains the requirement of the ERP Information element sender (AP in a BSS or STA in an IBSS) as to the use of protection mechanisms to optimize BSS performance and as to the use of long or short Barker preambles. See Figure 42E for a definition of the frame element.~~

The ERP Information element contains information on:

a) the presence of Clause 15 or Clause 18 stations in the BSS that are not capable of Clause 19 (ERP-OFDM) data rates
b) the directive from the ERP Information element sender (the AP, or in an IBSS a STA) as to the use of protection mechanisms to optimize BSS performance in the presence of STA which have implemented a PHY from Clause 15 or Clause 18 and not including Clause 19 capability
c) the directive from the ERP Information element sender (AP in a BSS or STA in an IBSS) as to the use of long or short Barker preambles
d) the presence of Clause 19 stations in the BSS, when the ERP Information element sender is an HTP STA
e) the directive from the ERP Information element sender (AP in a BSS or STA in an IBSS) as to the use of OFDM-protection mechanisms to optimize BSS performance
f) the presence of Clause 17 stations in the BSS, when the ERP Information element sender is a HTP STA
g) the presence of Clause 17 stations in the secondary 20 MHz channel which potentially limits the ability of the HTP STA to utilize a 40 MHz wide channel, when the ERP Information element sender is a HTP STA

h) the presence of HTP STA in the BSS which are not capable of receiving 40 MHz channel transmissions (20MHz HTP STA), when the ERP Information element sender is an HTP STA
i) the directive from the ERP Information element sender (AP in a BSS or STA in an IBSS) as to the use of 20MHz-protection mechanisms to optimize BSS performance

See Figure 42E for a definition of the ERP Information element.

In an infrastructure BSS, if one or more NonERP STAs are associated in the BSS, the Use_Protection bit shall be set to 1 in transmitted ERP Information Elements.

In an infrastructure BSS, if one or more Clause 19 or Clause 17 STAs are associated in the BSS, then the Use_OFDM_Protection bit shall be set to 1 in ERP Information Elements transmitted by HTP STAs and may be set to 1 in ERP Information Elements transmitted by nHTP STAs.

In an infrastructure BSS, if one or more 20MHz HTP STAs are associated in the BSS, then the Use_20MHz_Protection bit shall be set to 1 in ERP Information Elements transmitted by HTP STAs and may be set to 1 in ERP Information Elements transmitted by nHTP STAs.

In an IBSS, the setting of the Use_Protection and Use_OFDM_Protection and Use_20MHz_Protection bits is left to the STA. In an IBSS, there is no uniform concept of association; therefore, a typical algorithm for setting the Use_Protection and Use_OFDM_Protection and Use_20MHz_Protection bits will take into account the traffic pattern and history on the network. If a member of an IBSS which is not an HTP STA detects one or more NonERP STAs that are members of the same IBSS, then the Use_Protection bit should be set to 1 in the ERP Information Element of transmitted Beacon and Probe Response frames. If a member of an IBSS which is a HTP STA detects one or more Clause 19 STAs or one or more Clause 17 STAs that are members of the same IBSS, then the Use_OFDM_Protection bit should be set to 1 in the ERP Information Element of transmitted Beacon and Probe Response frames. If a member of an IBSS which is an HTP STA detects one or more 20MHz HTP STAs that are members of the same IBSS, then the Use_20MHz_Protection bit should be set to 1 in the ERP Information Element of transmitted Beacon and Probe Response frames.

In an infrastructure BSS, the NonERP_Present bit shall be set to 1 when a NonERP STA is associated with the BSS. Examples of when the NonERP present bit may additionally be set to 1 include, but are not limited to, when:

a) A NonERP infrastructure or independent BSS is overlapping (a NonERP BSS may be detected by the reception of a Beacon where the supported rates contain only Clause 15 or Clause 18 rates).

b) In an IBSS, if a Beacon frame is received from one of the IBSS participants where the supported rate set contains only Clause 15 or Clause 18 rates.

c) A management frame (excluding a Probe Request) is received where the supported rate set includes only Clause 15 or Clause 18 rates.

In an infrastructure BSS, the OFDM_PRESENT bit shall be set to 1 in ERP Information Elements transmitted by HTP STA when a Clause 17 or Clause 19 STA is associated with the BSS. Examples of when the OFDM_PRESENT bit may additionally be set to 1 in an ERP Information Element transmitted by a HTP STA include, but are not limited to, when

a) A Clause 17 or Clause 19 infrastructure or independent BSS is overlapping. (A Clause 17 BSS may be detected by the reception of a Beacon where the supported rates element and extended supported rates element contain only Clause 17 rates. A Clause 19 BSS may be detected by the reception of a Beacon where the supported rates and extended supported rates elements contain at least one rate from the set of Clause 19 rates and no HTP rates.)

b) In an IBSS, if a Beacon frame is received from one of the IBSS participants where the supported rate set contains:

1) only Clause 17 rates
OR
2) at least one rate from the set of Clause 19 rates and no HTP rates.

c) A management frame (excluding a Probe Request) is received where the supported rate set includes:

1) only Clause 17 rates
OR
2) at least one rate from the set of Clause 19 rates and no HTP rates.

The OFDM_PRESENT bit may optionally be set to 1 in ERP Information Elements transmitted by nHTP STA.

In an infrastructure BSS, the 20MHz_HTP_PRESENT bit shall be set to 1 in ERP Information Elements transmitted by HTP STA when one or more 20MHz HTP STAs are associated in the BSS. Examples of when the 20MHz_HTP_PRESENT bit may additionally be set to 1 in an ERP Information Element transmitted by a HTP STA include, but are not limited to, when

a) An infrastructure or independent BSS which is overlapping and which has signalled the presence of 20MHz HTP STA as indicated by the 20MHz_HTP_PRESENT bit.

b) In an IBSS, if a Beacon frame is received from one of the IBSS participants where the supported rate set contains at least one rate from the set of Clause 20 rates, but no 40MHz HTP rates.

c) A management frame (excluding a Probe Request) is received where the supported rate set contains at least one rate from the set of Clause 20 rates, but no 40MHz HTP rates.

The 20MHz_HTP_PRESENT bit may optionally be set to 1 in ERP Information Elements transmitted by nHTP STA.

~~ERP APs and ERP STAs~~ ERP APs, ERP STAs, HTP APs and HTP STAs shall invoke the use of a protection mechanism as described in clause 9.13 after transmission or reception of the Use_Protection bit with a value of 1 in an MMPDU to or from the BSS that the ~~ERP AP or ERP STA~~ ERP AP, ERP STA, HTP AP or HTP STA has joined or started. ~~ERP APs and ERP STAs~~ ERP APs, ERP STAs, HTP APs and HTP STAs may additionally invoke clause 9.13 protection mechanism use at other times.

~~ERP APs and ERP STAs~~ ERP APs, ERP STAs, HTP APs and HTP STAs may disable clause 9.13 protection mechanism use after transmission or reception of the Use_Protection bit with a value of 0 in an MMPDU to or from the BSS that the ~~ERP APs or ERP STAs~~ ERP AP, ERP STA, HTP AP or HTP STA has joined or started.

HTP APs and HTP STAs shall invoke the use of an OFDM protection mechanism after transmission or reception of the Use_OFDM_Protection bit with a value of 1 in an MMPDU to or from the BSS that the HTP AP or HTP STA has joined or started unless a protection mechanism as defined in clause 9.13 is being concurrently employed, in which case, the use of an OFDM protection mechanism is optional. HTP APs and HTP STAs may optionally invoke OFDM protection mechanism use at other times.

HTP APs and HTP STAs may disable OFDM protection mechanism use after transmission or reception of the Use_OFDM_Protection bit with a value of 0 in an MMPDU to or from the BSS that the HTP AP or HTP STA has joined or started.

40MHz HTP APs and 40MHz HTP STAs shall invoke the use of a 20MHz protection mechanism after transmission or reception of the Use_20MHz_Protection bit with a value of 1 in an MMPDU to or from the BSS that the 40MHz HTP AP or 40MHz HTP STA has joined or started unless a protection mechanism as defined in clause 9.13, or an OFDM protection mechanism is being concurrently employed, in which case, the use of a 20MHz protection mechanism is optional. 40MHz HTP APs and 40 MHz HTP STAs may optionally invoke 20MHz protection mechanism use at other times.

40MHz HTP APs and 40MHz HTP STAs may disable 20MHz protection mechanism use after transmission or reception of the Use_20MHz_Protection bit with a value of 0 in an MMPDU to or from the BSS that the 40MHz HTP AP or 40MHz HTP STA has joined or started.

When there are no NonERP STAs associated with the BSS and the ERP Information Element sender's dot11ShortPreambleOptionImplemented MIB variable is set to true, then the Barker_Preamble_Mode bit may be set to 0. The Barker_Preamble_Mode bit shall be set to 1 by the ERP Information Element sender if one or more associated NonERP STAs are not short preamble capable as indicated in their Capability Information field, or if the ERP Information Element senders dot11ShortPreambleOptionImplemented MIB variable is set to false.

If a member of an IBSS detects one or more non-short preamble-capable STAs that are members of the same IBSS, then the Barker_Preamble_Mode bit should be set to 1 in the transmitted ERP Information Element.

~~ERP APs and ERP STAs~~ ERP APs, ERP STAs, HTP APs and HTP STAs shall use long preambles when transmitting Clause 15, Clause 18, and Clause 19 frames after transmission or reception of an ERP Information Element with a Barker_Preamble_Mode value of 1 in an MMPDU to or from the BSS that the ~~ERP APs or ERP STAs~~ ERP AP, ERP STA, HTP AP or HTP STA has joined or started, regardless of the value of the short preamble capability bit from the same received or transmitted MMPDU that contained the ERP Information Element. ~~ERP APs and ERP STAs~~ ERP APs, ERP STAs, HTP APs and HTP STAs may additionally use long preambles when transmitting Clause 15, Clause 18, and Clause 19 frames at other times. ~~ERP APs and ERP STAs~~ ERP APs, ERP STAs, HTP APs and HTP STAs may use short preambles when transmitting Clause 15, Clause 18, and Clause 19 frames after transmission or reception of an ERP Information Element with a Barker_Preamble_Mode value of 0 in an MMPDU to or from the BSS that the ~~ERP APs or ERP STAs~~ ERP AP, ERP STA, HTP AP or HTP STA has joined or started, regardless of the value of the short preamble capability bit from the same received or transmitted MMPDU. ~~NonERP STAs and NonERP APs~~STAs which are neither ERP nor HTP and APs which are neither ERP nor HTP may also follow the rules given in this paragraph.

The Secondary_Channel_Used bit may be set to 0 in ERP Information Elements transmitted by HTP STAs or HTP APs if no frames with a Clause 17 BSSID have been received within the last two seconds on the secondary 20 MHz channel of the BSS that the HTP AP or HTP STA has joined or started, otherwise, the Secondary_Channel_Used bit shall be set to 1. nHTP STAs and nHTP APs shall always set the Secondary_Channel_Used bit to 0 if they transmit ERP Information elements.

Recommended behavior for setting the Use_Protection bit is contained in 9.10.

The ERP Information element shall have the form shown in Figure 42E.

B0-B7	B0-B7	B0	B1	B2	B3	B4	B5	B6	B7
ElementID	Length(1)	NonERP Present	Use_protection	Barker preamble mode	OFDM_present	Use_OFDM _Protection	Secondary_ Channel_ Used	20MHz_ HTP _PRESENT	USE_ 20MHz_PROTECTION

Figure 42E

~~Bits r3 through r7 are reserved, set to 0, and are ignored on reception. Note that the length of this element is flexible and may be expanded in the future.~~

Note that the length of this element is flexible and may be expanded in the future.

7.3.2.22.1 Basic Report

Change one of the reserved bits in figure 46o "Map Field Format" to be "Secondary Channel"

Add the following after the definition of the "Unmeasured bit"

— Secondary Channel bit, which shall be set to 1 when at least one valid Secondary Channel Beacon (as described in clause 9.13.2.1) was received during the measurement period from another BSS. Otherwise the Secondary Channel bit shall be set to zero.

Add the following new clauses as the last sub-clauses of 7.3.2 "Information Elements"

7.3.2.25 Channel Set

The Channel Set information element is used to convey information about the channels from which a 40 MHz Channel Pair are formed. The Primary Channel field shall contain the channel number of the primary channel. The Secondary Channel shall contain the channel number of the secondary channel.

This information element may be extended in later versions of this standard.

See Figure 000n:

	Element ID	Length	Primary Channel	Secondary Channel
Octets:	1	1	1	1

Figure 000n- Channel Set element format

7.4.5 High Throughput action details

Four Action frame formats are defined for High Throughput. An action field, in the octet field immediately after the Category field, differentiates the four formats. The Action field values associated with each format are defined in Table 20.22.

Table 20.22 – High Throughput Action field values

Action field value	Description
0	Mode Request
1	Mode Report

2	MIMO Channel Request
3	MIMO Channel Report
4-255	Reserved

7.4.5.1 Mode Request frame format

The Mode Request frame uses the Action frame body format and is transmitted by a STA requesting the receiving STA to indicate the best transmission mode to employ for high throughput communication. The format of the Mode Request frame is shown in Figure 000n1.

The Category field shall be set to 4 (representing High Throughput).

The Actions field shall be set to 0 (representing a Mode Request Frame).

The Dialog Token field shall be set to a nonzero value chosen by the STA sending the Mode Request to identify the request/report transaction.

The Mode Request field shall be set to 1. All other values for this field are reserved.

	Category	Action	Dialog Token	Mode Request
Octets:	1	1	1	1

Figure 000n1- Mode Request frame format

Upon reception of a Mode Request frame, an STA must respond with a Mode Response, as described in 7.4.5.2. A null response may be used.

7.4.5.2 Mode Response frame format

The Mode Response frame uses the Action frame body format and is transmitted by a STA in response to a Mode Request frame. It may also be used as an unsolicited request to use a certain PHY mode. The format of the Mode Response frame is shown in Figure 000n2.

The Category field shall be set to 4 (representing High Throughput).

The Actions field shall be set to 1 (representing a Mode Response Frame).

The Dialog Token field shall be set to the value in any corresponding Mode Request Frame. If the Mode Response is not being transmitted in response to a Measurement Request frame, the Dialog token shall be set to zero.

The Mode Response field shall contain the mode that the STA would prefer the requesting station to employ. The specific mechanism for determining this mode is implementation dependent. A null response of all ones (i.e. 0xFFFF) is used if the station is unable to determine a mode. Otherwise, the mode is indicating using bits b6:b21 as shown in Figure 017 (SIG-N field). All other bits are reserved and set to zero.

	Category	Action	Dialog Token	Mode Response
Octets:	1	1	1	4

Figure 000n2- Mode Response frame format

7.4.5.3 MIMO Channel Request frame format

The MIMO Channel Request frame uses the Action frame body format and is transmitted by a STA requesting the receiving STA to provide its estimate of the MIMO channel matrix seen on receiving this frame. The format of the MIMO Channel Request frame is shown in Figure 000n3.

The Category field shall be set to 4 (representing High Throughput).

The Actions field shall be set to 2 (representing a MIMO Channel Request Frame).

The Dialog Token field shall be set to a nonzero value chosen by the STA sending the MIMO Channel Request to identify the request/report transaction.

The MIMO Channel Request field shall be set to 1. All other values for this field are reserved.

	Category	Action	Dialog Token	MIMO Channel Request
Octets:	1	1	1	1

Figure 000n3- MIMO Channel Request frame format

7.4.5.4 MIMO Channel Response frame format

The MIMO Channel Response frame uses the Action frame body format and is transmitted by a STA in response to a MIMO Channel Request frame. It may also be used as an unsolicited indication of the observed MIMO channel matrix. The format of the MIMO Channel Response frame is shown in Figure 000n4.

The Category field shall be set to 4 (representing High Throughput).

The Actions field shall be set to 3 (representing a MIMO Channel Response Frame).

The Dialog Token field shall be set to the value in any corresponding MIMO Channel Request Frame. If the MIMO Channel Response is not being transmitted in response to a MIMO Channel Request frame, the Dialog token shall be set to zero.

	Category	Action	Dialog Token	Mode Response
Octets:	1	1	1	N

Figure 000n4- MIMO Channel Response frame format

The Mode Response field is of varying length depending on the actual channel matrix being encoded. The octets of the Mode Response field are set according to the table below.

Table XYZ – Mode Response Encoding

Octet	Contents
1-2	Length of Mode Response field in octets (16 bit unsigned integer)
3	Response type 0 for Null 1 for MIMO channel estimate 2-255 Reserved
4	Number of Rows in Channel Matrix (i.e. NRX antennas)
5	Number of Columns in Channel Matrix (i.e. NTX antennas)
6 to (5+Nst*Nrows*Ncols*4)	Channel matrix elements row by row starting with element (1,1) from lowest to highest subcarrier. Each element is encoded as two 16 bit signed integers (I and Q).

For the MIMO channel estimate, the station sends the actual channel estimate it computes during preamble processing of a MIMO Channel Request Frame.

9. MAC sublayer functional description

9.1 MAC architecture

Insert the following subclause after clause 9.1.3(.11e) and renumber existing subclauses 9.1.4(.11e) through 9.1.5(.11e) to be subclauses 9.1.5 through 9.1.6

9.1.4 MSDU aggregation

One or more MSDUs being sent to the same receiver can be aggregated into a single A-MSDU. Aggregation of more than one frame can improve system efficiency as seen at the MAC sub-layer due to the fact that the overheads associated with channel access (e.g. PLCP preamble, MAC header, IFS spacing, etc.) can be amortized over two or more MSDUs. Frames with address types of Broadcast ,Multicast, or Unicast frames can be aggregated with other frames of the same address type, but not with frames of different address type due to the requirement to share the receiver address. Aggregation is optional and the process is considered a "sub-process" between MSDU queuing and sequence number assignment in Figure 11g of Clause 6.1.4.

A STA shall only use MSDU aggregation where it knows that the receiver supports MSDU aggregation. A STA shall not aggregate MSDUs that have different values of priority as indicated by the MA-UNITDATA.request primitive. A STA may aggregate MSDUs with different values of destination address as long as they would have the same value in the Address 1 field had they been sent as individual MPDUs.

To form an A-MSDU, two or more MSDUs are aggregated together, separated by a sub-frame header. This is shown in Figure 001n. The resulting A-MSDU is therefore the combination of all MSDUs in the A-MSDU along with a sub-frame header for each constituent MSDU.

The destination address of the A-MSDU is the address of the STA that is the next immediate intended receiver of the aggregated frame. The source address of the A-MSDU is the MAC address of the STA that created the A-MSDU.

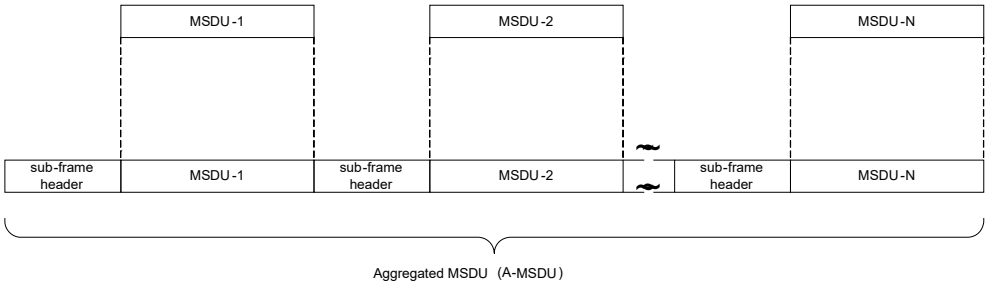

Figure 001n – Formation of an A-MSDU

The format for the sub-frame header is given in Figure 002n. The sub-frame header is 14 octets in length and consists of a 16-bit MSDU length field, a 6-octet source address of the constituent MSDU, and a 6-octet destination address of the constituent MSDU. The MSDU length field indicates the length, in octets, of the constituent MSDU.

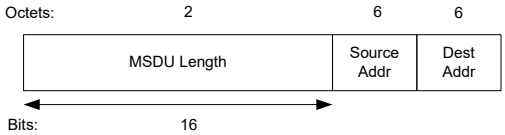

Figure 002n – Sub-Frame Header

A data frame bearing an A-MSDU within its frame body is identified by a '1' in the Aggregated MSDU bit of the QoS Control Field (Clause 7.1.3.5). For data frames containing a non-aggregated MSDU, this bit will be zero.

After aggregation, the procedures for handling an A-MSDU are no different from an MSDU including sequence number assignment, optional MSDU integrity protection, and fragmentation, with the single exception of the Aggregated MSDU bit described above. Once formed, A-MSDUs shall not be un-aggregated by the transmitter, as there are no facilities for individual sequencing or retransmission of the constituent MSDUs.

A method for determining when to engage optional MSDU aggregation is out of scope for this standard.

Insert the following subclause after clause 9.1.3(.11e) and renumber existing subclauses 9.1.6(.11e) to be subclauses 9.1.7

9.1.6 HTP Burst Transmission overview

The high-throughput PHY defines burst transmission formats that permit more efficient usage of the medium. A HTP burst transmission is performed in a single medium access, and permits frames to be sent to different destination addresses. These formats shall only be used to transmit frames to other HTP STAs, and may be used as part of any kind of TXOP. The medium spacing before and after a HTP burst transmission shall be governed by the rules covering the spacing before and after a non-burst transmission in the TXOP.

A HTP burst transmission consists of a sequence of frames transmitted by a single HTP STA without intervening frames by any other STA. The frames of the HTP burst transmission shall be transmitted using a single HTP rate group as defined in 20.3.2.2. During a HTP burst transmission, the MAC may utilise RIFS and/or instruct the PHY to aggregate multiple frames into a single A-PPDU. These formats are illustrated in Figure 003n.

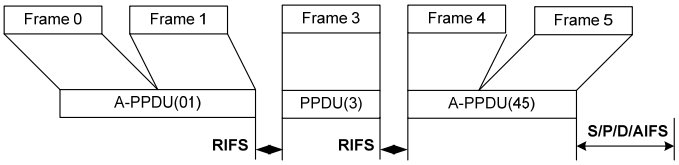

Figure 003n – HTP Burst transmission

Frames may be aggregated into a single A-PPDU if they are being transmitted at the same TXPWR_LEVEL. A frame that uses a different TXPWR_LEVEL as the previous frame in the HTP burst transmission may use RIFS.

9.2 DCF

9.2.3 Interframe Space (IFS)

Change the text in clause 9.2.3(.11e) as follows

The time interval between frames is called the IFS. A STA shall determine that the medium is idle through the use of the carrier sense function for the interval specified. An interframe space, RIFS, is defined for use between frames in a HTP burst transmission, and another five IFSs are defined to provide priority levels for access to the wireless media. To obtain access to the medium, a STA shall determine that the medium is idle through the use of the carrier sense function for the interval specified. ~~Five different IFSs are defined to provide priority levels for~~

~~access to the wireless media; they~~ The interframe spaces are listed in order, from the shortest to the longest except for AIFS. Figure 49 shows some of these relationships.

a) RIFS Reduced Interframe Space
b) Short Interframe Space
c) PIFS Point Coordination Function (PCF) Interframe Space
d) DIFS Distributed Coordination Function (DCF) Interframe Space
e) AIFS Arbitration Interframe Space (used by the QoS facility)
f) EIFS Extended Interframe Space

Insert the following subclause after clause 9.2.3(.11e) and renumber existing subclauses 9.2.3.1(.11e) through 9.2.3.5(.11e) to be subclauses 9.2.3.2 through 9.2.3.6.

9.2.3.1 RIFS

The RIFS may be used for the second or subsequent frame of a HTP burst transmission if the frame will be transmitted at a different power than the immediately previous frame.

9.2.12 Determination of PLME aCWmin characteristics

Modify the first paragraph of clause 9.2.12 as follows:

In the case of the Clause 19 Extended Rate PHY and Clause 20 High Throughput PHY, the aCWmin value is dependent on the requestor's characteristic rate set. The characteristic rate set is equal to the IBSS's supported rate set when the STA is operating as a member of an IBSS. It is equal to the AP's supported rate set when the STA is associated with an AP. At all other times, it is equal to the STA's mandatory rate set. The MAC variable aCWmin is set to aCWmin(0) if the characteristic rate set includes only rates in the set 1, 2, 5.5, 11 otherwise, aCWmin is set to aCWmin(1). If the returned value for aCWmin is a scalar, then the MAC always sets the variable aCWmin to the returned scalar value of aCWmin.

9.6 Multirate support

Make the following changes to paragraph 7 of clause 9.6(.11g) "Multirate Support":

To allow the transmitting STA to calculate the contents of the Duration/ID field, a STA responding to a received frame shall transmit its Control Response (either CTS or ACK) frames at the highest rate in the BSSBasicRateSet that is less than or equal to the rate of the immediately previous frame in the frame exchange sequence (as defined in 9.7) and that is of the same modulation ~~type~~ class (see Clause 9.6.1) as the received frame. If no rate in the basic rate set meets these conditions, then the control frame sent in response to a received frame shall be transmitted at the highest mandatory rate of the PHY that is less than or equal to the rate of the received frame, and that is of the same modulation ~~type~~ class as the received frame. In addition, the Control Response frame shall be sent using the same PHY options as the received frame, unless they conflict with the requirement to use the BSSBasicRateSet.

Add new clause 9.6.1 immediately following the existing clause 9.6

9.6.1 Modulation Classes

In order to determine the rules for response frames given in clause 9.6, the following modulation classes are defined. Each row defines a modulation class. Modulation types within the same row have the same modulation class, while modulation types in different rows have different modulation classes.

Table 9.6.1T Modulation Classes

Modulation Class	Description
1	Clause 16 Infrared PHY
2	Clause 14 Frequency Hopping Spread Spectrum PHY
3	Clause 15 DSSS PHY, and Clause 18 High Rate DSSS PHY
4	Clause 19.6 ERP-PBCC PHY
5	Clause 19.7 DSSS-OFDM
6	Clause 19.5 ERP-OFDM PHY
7	Clause 17 Orthogonal Frequency Division Multiplexing PHY in the 5GHz band
8	Clause 20 High Throughput PHY (20 MHz transmissions)
9	Clause 20 High Throughput PHY (40 MHz transmissions)

9.9 HCF

9.9.1 HCF contention-based channel access (EDCA)

9.9.1.4 Multiple frame transmission in an EDCA TXOP

Change the first paragraph of subclause 9.9.1.4(.11e) as follows:

Multiple frames may be transmitted in an acquired EDCA TXOP following the rules in 9.9.1.3. if there are more than one frame pending in the AC for which the channel has been acquired. However, those frames that are pending in other ACs shall not be transmitted in this EDCA TXOP. If a QSTA has in its transmit queue an additional frame of the same AC as the one just transmitted, and the duration of transmission of that frame plus any expected acknowledgement for that frame is less than the remaining medium occupancy timer value, then the QSTA may commence transmission of that frame ~~at SIFS after the completion of the immediately preceding frame exchange sequence~~ after the completion of the appropriate interframe space from the end of the immediately preceding frame exchange sequence. The intention of using the multiple frame transmission shall be indicated by the QSTA through the setting of the duration/ID values in one of the following two ways (see 7.1.4):

9.9.2 HCF controlled channel access

9.9.2.1 HCF controlled channel access procedure

9.9.2.1.2 CAP generation

Change the second paragraph of subclause 9.9.2.1.2(.11e) as follows

~~During a CFP or a TXOP in CP, after each data, QoS data or management type frame with a group address in the Address1 field, the HC shall wait for at least one PIFS period, and shall only continue to transmit if the WM is idle.~~ After the last frame of all ~~other non-final~~ frame exchange sequences ~~(e.g., sequences that convey unicast QoS data or management type frames)~~ during a TXOP, the holder of the current TXOP shall wait for one SIFS period before transmitting the first frame of the next frame exchange sequence, unless the frame exchange is part of a HTP burst transmission when the rules identified in clause 9.1.6 apply. The HC may sense the channel and reclaim the channel after a duration of PIFS after the TXOP, if the channel remains idle. A CAP ends when the HC does not reclaim the channel after a duration of PIFS after the end of a TXOP.

9.9.2.2 TXOP structure and timing

Change the first paragraph of subclause 9.9.2.2(.11e) as follows

Any QoS data type frame of a subclass that includes CF-Poll contains a TXOP limit in its QoS control field. The ensuing polled TXOP is protected by the NAV set by the Duration field of the frame that contained the QoS (+) CF-Poll function, as shown in Figure 62.4. Within a polled TXOP a QSTA may initiate the transmission of one or more frame exchange sequences, with all such sequences being part of a HTP burst transmission, or being nominally separated by a SIFS interval. The QSTA shall not initiate transmission of a frame unless the transmission, and any acknowledgement or other immediate response expected from the peer MAC entity, are able to complete prior to the end of the remaining TXOP duration. All transmissions, including the response frames, within the polled TXOP are considered to be the part of the TXOP and the HC shall account for these when setting the TXOP limit. If the TXOP Limit subfield in the QoS Control field of the QoS data type frame that includes CF-Poll is set to 0, then the QSTA to which the frame is directed to shall respond with either one MPDU or one QoS Null frame.

9.10 Block acknowledgment

9.10.1 Introduction (Informative)

Change the first paragraph of subclause 9.9.10.1(.11e) as follows

The Block Acknowledgement (Block Ack) mechanism allows a block of QoS Data MPDUs to be transmitted between two QSTAs without intervening ACK frames ~~each separated by a SIFS period, between two QSTAs~~. The mechanism is for improving the channel efficiency by aggregating several acknowledgements into one frame. There are two types of Block Ack mechanisms: immediate and delayed. Immediate Block Ack is suitable for high-bandwidth, low latency traffic while the delayed Block Ack is suitable for applications that tolerate moderate latency. In this clause, the QSTA with data to send using the Block Ack mechanism is referred to as the originator and the receiver of that data as the recipient.

9.10.3 Data and acknowledgement transfer

Change the first paragraph of subclause 9.9.10.1(.11e) as follows

After setting up for the Block exchange following the procedure in 9.10.2, the originator may transmit a Block of QoS data type frames ~~separated by SIFS period,~~ with the total number of frames not exceeding the Buffer Size subfield in the associated ADDBA response frame. Each of the frames shall have the Ack policy subfield in the QoS Control set to "Block Acknowledgement". The RA field of the frames shall be the recipient's *unicast* address.

The originator requests acknowledgement of outstanding QoS Data type frames by sending a BlockAckReq frame. The recipient shall maintain a Block Ack record for the block.

9.12 Frame exchange sequences

Edit Table 22.1(.11e) <HCF sequence> and replace all "=" with"-".

Remove definition 36 from end of Table 22.4(.11e) (no PIFS spacing defined anymore).

Replace the last sentence of the text in subclause 9.12 as follows(.11e) with:

Individual frames within each of these sequences ~~are separated by a SIFS~~ may be send as part of a HTP burst transmission if the frames meet the rules identified in clause 9.16., otherwise a SIFS separation is used unless an "=" sign appears between frames in the table, in which case, PIFS is used.

Edit Table 22 <CF frame sequences> and change field "frames in sequence" for row "Beacon(CF)" from "1" to "1 or 2" and modify legend 14 (for Beacon) as follows:

14—"Beacon(CF)" represents a management frame of subtype Beacon with a nonzero value in the CFPDurRemaining field of its CF Parameter Set element. The optional second Beacon shall be sent after the first Beacon using a lower rate. For example, this enables STAs which are out of normal communication range to receive a Beacon.

9.13 Protection mechanism

Delete two paragraphs from the text of clause 9.13 as follows:

If a protection mechanism is being used, a fragment sequence may only employ ERP-OFDM modulation for the final fragment and control response.

The rules for calculating RTS/CTS NAV fields are unchanged when using RTS/CTS as a protection mechanism.

Insert the following two new subclauses after clause 9.13:

9.13.1 OFDM Protection

The intent of an OFDM protection mechanism is to ensure that an HTP STA does not transmit an MPDU of type Data or an MMPDU, using a Clause 20 rate which is not also a Clause 17 or Clause 19 rate unless it has attempted to update the NAV or cause a PHY-CCA.indicate(status=BUSY) to be elicited by receiving Clause 17 or Clause 19 STAs.

The updated NAV period shall be longer than or equal to the total time required to send the data and any required response frames.

The PHY-CCA.indicate(status=BUSY) shall be longer than or equal to the total time required to send the data and any required response frames.

HTP STAs shall use OFDM protection mechanisms (such as RTS/CTS or CTS-to-self employing a Clause 19 or Clause 17 rate) for Clause 20-only rate MPDUs of type Data or MMPDUs when the Use_OFDM_Protection field of transmitted or received ERP Information elements is set to 1 and the BSSID of the frame which contained the ERP Information element is the same as the BSS which the HTP STA has joined or started. Clause 19 rates shall

be employed when the BSS is operating in a Clause 19 channel. Clause 17 rates shall be employed when the BSS is operating in a Clause 17 channel.

OFDM Protection mechanism frames shall conform to at least one of the following conditions:
a) The frame shall be sent using one of the mandatory Clause 19 or Clause 17 rates and using one of the mandatory Clause 17 or Clause 19 waveforms, so that all known ERP or Clause 17 STAs in the BSA will know the duration of the exchange even if they cannot detect the Clause 20 frames using their CCA function
b) The frame shall be sent using a Clause 17 preamble and signal field (additional, non-clause 17 preamble and signal field may be present following the Clause 17 preamble and signal field)
c) The frame shall be sent using a Clause 19 preamble and signal field (additional, non-clause 19 preamble and signal field may be present following the Clause 19 preamble and signal field)

In the case of a BSS composed of only HTP STAs, but with knowledge of a neighboring co-channel BSS having nHTP traffic, the AP may require either or both of protection mechanisms and OFDM protection mechanisms to protect the BSSs traffic from interference. This will provide propagation of NAV of PHY-CCA.indicate(status=BUSY) to all associated STAs and all STAs in a neighboring co-channel BSS within range through BSS basic rate set modulated messages. Frames that propagate the NAV throughout the BSS include RTS/CTS/ACK frames, all data frames with the “more fragments” field set to 1, all data frames sent in response to PS-Poll that are not preceded in the frame sequence by a data frame with the “more fragments” field set to 1, Beacon frames with nonzero CF time, +CF-POLL frames, various QOS frames, and CF-End frames. Frames that propagate PHY-CCA.indicate(status=BUSY) throughout the BSS include any frames which commence with an appropriately chosen preamble and signal field.

If any of the rates in the BSSBasicRateSet of the OFDM protection mechanism frame transmitting STAs BSS are Clause 17 or Clause 19 rates, then the OFDM protection mechanism frames shall be sent at one of those Clause 17 or Clause 19 basic rates, unless either condition b) or condition c) from above has been met, in which case, no rate restrictions apply.

OFDM Protection Mechanisms shall not be used where the frame transmission will be protected by the Protection Mechanism defined in clause 9.13

9.13.2 20MHz Protection

The intent of a 20MHz protection mechanism is to ensure that a 40MHz HTP STA does not transmit an MPDU of type Data or an MMPDU as a 40MHz transmission unless it has attempted to update the NAV or cause a PHY-CCA.indicate(status=BUSY) to be elicited by receiving 20MHz HTP STAs which may be present.

The updated NAV period shall be longer than or equal to the total time required to send the data and any required response frames.

The PHY-CCA.indicate(status=BUSY) shall be longer than or equal to the total time required to send the data and any required response frames.

40MHz HTP STAs shall use 20MHz protection mechanisms (such as RTS/CTS or CTS-to-self employing a 20MHz HTP rate) for 40MHz transmissions of MPDUs of type Data or MMPDUs when the Use_20MHz_Protection field of transmitted or received ERP Information elements is set to 1 and the BSSID of the frame which contained the ERP Information element is the same as the BSS which the 40MHz HTP STA has joined or started.

20MHz Protection mechanism frames shall conform to at least one of the following conditions:

a) The frame shall be sent using one of the mandatory 20MHz HTP rates, so that all known 20MHz HTP STAs in the BSA will know the duration of the exchange even if they cannot detect 40MHz transmissions using their CCA function.
b) The frame shall be sent using a 20MHz preamble and signal field (additional, non-20MHz preamble and signal field may be present following the 20MHz preamble and signal field)

In the case of a BSS composed of only 40MHz HTP STAs, but with knowledge of a neighboring co-channel BSS having nHTP traffic, the AP may require any of clause 9.13 protection mechanisms, OFDM protection mechanisms and 20MHz protection mechanisms to protect the BSSs traffic from interference. This will provide propagation of NAV of PHY-CCA.indicate(status=BUSY) to all associated STAs and all STAs in a neighboring co-channel BSS within range through BSS basic rate set modulated messages. Frames that propagate the NAV throughout the BSS include RTS/CTS/ACK frames, all data frames with the "more fragments" field set to 1, all data frames sent in response to PS-Poll that are not preceded in the frame sequence by a data frame with the "more fragments" field set to 1, Beacon frames with nonzero CF time, +CF-POLL frames, various QOS frames, and CF-End frames. Frames that propagate PHY-CCA.indicate(status=BUSY) throughout the BSS include any frames which commence with an appropriately chosen preamble and signal field.

If any of the rates in the BSSBasicRateSet of the 20MHz protection mechanism frame transmitting STAs BSS are 20MHz rates, then the 20MHz protection mechanism frames shall be sent at one of those 20MHz basic rates, unless condition b) from above has been met, in which case, no rate restrictions apply.

OFDM Protection Mechanisms shall not be used where the frame transmission will be protected by the Protection Mechanism defined in clause 9.13

Insert new clause 9.14 and sub-clauses as follows:

9.14 40 MHz Channel Pairs

Clause 20 defines a mode in which High Throughput PHYs can transmit a frame utilising a 40 MHz channel pair in order to achieve lower frame durations than if a single 20 MHz channel was used. This clause describes the MAC support for this feature in an infrastructure BSS. 40 MHz transmissions shall only be used when the STA has joined or started an Infrastructure BSS.

A 40 MHz channel pair consists of two 20 MHz channels, and a BSS operating on a 40 MHz Channel Pair will make use of one of these channels (called the primary channel) for 20 MHz transmissions. The other channel (called the secondary channel) will not be used by the BSS for 20 MHz transmissions.

9.14.1 40 MHz Fundamentals of Operation

A 40 MHz channel pair consists of two 20 MHz channels, on each of which there could be 20 MHz transmissions (from an overlapping BSS on either channel, or from 20 MHz transmissions on the primary channel), and on each of which the Carrier Sense mechanism described in clause 9.2.1 could be run. However, it is not possible to combine two Carrier Sense mechanisms without degrading the effective priority of 40 MHz transmissions to such an extent that they would provide no benefit.

For this reason the MAC models a 40 MHz channel pair as a single 20 MHz channel (the primary channel) in which some transmissions happen to "overflow" into the Secondary Channel.

A STA that wishes to transmit on both channels of a 40MHz channel shall conduct CCA on the primary channel, with the following extension. For any frame transmission that requires the CCA function to indicate a clear channel before transmission, the secondary channel CCA state shall also be checked. If the secondary channel CCA indicates a busy channel, the STA shall not transmit on the secondary channel. It shall either fall back to 20MHz operation (for only the current transmission), or shall consider the frame transmission to have failed (including all incrementing of retry counters and contention windows etc where required).

An AP shall indicate that it is operating on a 40 MHz channel pair by including the Channel Set information element in its Beacon frames. An AP shall not change the information contained in the Channel Set information element without invoking the channel move procedure described in clause 11.6.7. A STA that has joined a BSS and that wishes to use 40 MHz transmissions shall check the setting of the Secondary_Channel_Used bit in the ERP Information Element in the last valid Beacon frame received from the BSS, and shall not use 40 MHz transmissions where the Secondary_Channel_Used bit is set to 1.

A STA shall not send a 20 MHz transmission to a member STA of a BSS on the secondary channel of that BSS. A STA that has joined or started a BSS operating on a 40 MHz channel pair shall discard all 20 MHz transmissions received on the secondary channel. A STA shall not join a BSS on its secondary channel.

An AP that detects significant evidence of collisions on the secondary channel may invoke the channel move procedure described in clause 11.6.7.

9.14.2.1 Secondary Channel Beacon

In order to reduce the chance of the secondary channel being used by an overlapping BSS, an AP may send a Beacon frame using the secondary channel with contents chosen to discourage use of the secondary channel by other BSSes.

The frame body of such a beacon is shown in Clause 7.2.3.1.1. These beacons contain a rate set consisting of a single clause 20 basic rate, and so should not cause non-clause 20 STAs to attempt to associate with the AP on the secondary channel.

When transmitting a beacon on the secondary channel, the AP may observe the channel access mechanisms described elsewhere in clause 9 for the transmission of Beacon frames, or it may transmit the Beacon frame without consideration of the state of the secondary channel.

9.14.3 Beacon Transmission

An AP operating on a 40 MHz channel pair shall send Beacon frames (with the exception of Secondary Channel Beacon frames) on the primary channel using a 20 MHz transmission.

9.14.4 Limits on Channel Numbering

Both the primary and secondary Channels shall be legal 20 MHz channels in the 5GHz band. For a primary channel number “n”, the secondary channel number shall be either “n+4” or “n-4”.

10. Layer management

10.4 PLME SAP interface

10.4.3 PLME_CHARACTERISTICS.confirm

10.4.3.2 Semantics of the service primitive

Change the primitive description as follows:

The primitive provides the following parameters:

```
PLME-CHARACTERISTICS.confirm(
                    aSlotTime,
                    aSIFSTime,
                    aRIFSTime,
                    aCCATime,
                    aRxTxTurnaroundTime,
                    aTxPLCPDelay,
                    aRxPLCPDelay,
                    aRxTxSwitchTime,
                    aTxRampOnTime,
                    aTxRampOffTime,
                    aTxRFDelay,
                    aRxRFDelay,
                    aAirPropagationTime,
                    aMACProcessingDelay,
                    aPreambleLength,
                    aPLCPHeaderLength,
                    aMPDUDurationFactor,
                    aMPDUMaxLength,
                    aCWmin,
                    aCWmax
                    )
```

Add the following entry to the table:

aRIFSTime	integer	The minimum time (in microseconds) that the PHY requires between PSDUs that are transmitted with differing TXPWR_LEVELs within a HTP burst transmission.

10.4.4 PLME-DSSSTESTMODE.request

10.4.4.2 Semantics of the service primitive

Change the sixth row in the table in 10.4.4.2 as shown:

DATA_RATE	Integer	2, 4, 11, 12, 18, 22, 24, 36, 44, 48, 66, 72, 73-92, 96, 97-106, 108, 109-121	Selects among rates and transmission modes 02 = 1 Mbit/s 04 = 2 Mbit/s 11 = 5.5 Mbit/s 12 = 6 Mbit/s 18 = 9 Mbit/s

			22 = 11 Mbit/s 24 = 12 Mbit/s 36 = 18 Mbit/s 44 = 22 Mbit/s 48 = 24 Mbit/s 66 = 33 Mbit/s 72 = 36 Mbit/s 96 = 48 Mbit/s 108 = 54 Mbit/s 73-95, 97-107, 109-122 = See Tables 003-009 and Table 019 in subclause 20.3.2.2 and 20.3.5.10 respectively

AXW-2028-039

20. High throughput PHY specification for the 2.4 and 5 GHz bands

20.1 Overview

This clause specifies the PHY entity for a multiple input multiple output orthogonal frequency division multiplexing (MIMO-OFDM) system and the additions that have to be made to the base standard to accommodate the MIMO-OFDM PHY. The radio frequency LAN system is aimed for both the 2.4 GHz band and the 5 GHz bands, as specified in subclause 20.3.8.3

20.1.1 Introduction

The MIMO-OFDM system provides a wireless LAN with mandatory data payload communication capabilities of up to 135 Mbit/s and with optional modes capable of supporting data rates up to 540 Mbit/s. The MIMO-OFDM PHY draws from the basic OFDM PHY defined in Clause 17, and builds its extensions to two, three, and four transmit antenna modes (hereafter known as 2TX, 3TX, and 4TX, respectively), operating in 20 MHz bandwidth. Additionally, 1TX, 2TX, 3TX, and 4TX modes are also defined for operation in 40 MHz bandwidth.

20.1.2 Operational Modes

The radio portion of all Clause 20 compliant MIMO-OFDM PHY systems shall implement all mandatory and optional data rates defined in Clause 17, all mandatory data rates defined in Clause 19, and all optional data rates of the OFDM-based ERP defined in Clause 19, in their respective bands of operation. In addition, support for transmitting and receiving data using the MIMO-OFDM PHY defined in this Clause is mandatory for all rates specified for the 2TX, 20 MHz mode in subclause 20.3.2.2. Support for 3TX and 4TX modes in 20 MHz; 1TX, 2TX, 3TX, and 4TX modes in 40 MHz; and all modes defined in subclause 20.3.5.10 shall be optional.

Furthermore, the amendment extends the optional ‘half-clocked’ operation with 10 MHz channel spacings described in Section 17 and Annex J to high throughput modes. For each mode offered at 20 MHz channel spacing, a corresponding mode with half the data rate is offered with 10 MHz channel spacing. Support of the 27, 40.5, 54, 60.75, and 67.5 Mbps modes corresponding to the modes in Table 003 is mandatory when using 10 MHz channel spacing.

20.1.3 Scope

This subclause describes the PHY services provided to the IEEE 802.11 wireless LAN MAC by the MIMO-OFDM system. The MIMO-OFDM PHY layer consists of two protocol functions, defined as follows:

a) A PHY convergence function, which adapts the capabilities of the physical medium dependent (PMD) system to the PHY service. This function is supported by the physical layer convergence procedure (PLCP), which defines a method of mapping the IEEE 802.11 PHY sublayer service data units (PSDU) into a framing format suitable for sending and receiving user data and management information between two or more stations using the associated PMD system.

b) A PMD system whose function defines the characteristics and method of transmitting and receiving data through a wireless medium between two or more stations, each using the MIMO-OFDM PHY.

20.1.4 MIMO-OFDM PHY functions

The architecture of the MIMO-OFDM PHY is depicted in the ISO/IEC basic reference model shown in Figure 141 of 18.4.1. The MIMO-OFDM PHY contains three functional entities: the PMD function, the PHY convergence function (PLCP), and the layer management function.

The MIMO-OFDM PHY service is provided to the MAC through the PHY service primitives defined in Clause 12. Interoperability is addressed by use of the carrier sense mechanism specified in 9.2.1 and the protection mechanism in 9.10. This mechanism allows non-MIMO-OFDM stations to know of MIMO-OFDM traffic that they cannot demodulate so they may defer the medium to that traffic.

20.2 PHY-specific service parameter list

The architecture of the IEEE 802.11 MAC is intended to be PHY independent. Some PHY implementations require PHY-dependent MAC state machines running in the MAC sublayer in order to meet certain PMD requirements. The PHY-dependent MAC state machine resides in a sublayer defined as the MAC sublayer management entity (MLME). In certain PMD implementations, the MLME may need to interact with the PLME as part of the normal PHY SAP primitives. These interactions are defined by the PLME parameter list currently defined in the PHY service primitives as TXVECTOR and RXVECTOR. The list of these parameters, and the values they may represent, are defined in the specific PHY specifications for each PMD. This subclause addresses the TXVECTOR and RXVECTOR for the MIMO-OFDM PHY.

The parameters in Table 001 are defined as part of the TXVECTOR parameter list in the PHY-TXSTART.request service and PLME-TXTIME.request primitives.

Table 001—TXVECTOR parameters

Parameter	Value
DATARATE	The rate used to transmit the PSDU in Mbit/s. Allowed value depends on the values of TRANSMISSION_MODE and NUM_STREAMS parameters Values: 6.75, 10.125, 13.5, 20.25, 27, 40.5, 54, 60.75, 67.5, 81, 108, 121.5, 135, 162, 182.25, 202.5, 216, 243, 270, 324, 364.5, 405, 432, 486, 540
LENGTH	The length of the PSDU in octets Range: 1-8191
TRANSMISSION_MODE	The mode used for transmission of the PPDU. Determines the preamble type used. Enumerated type: 2TX20GF, 3TX20GF, 4TX20GF, 2TX20MM, 3TX20MM, 4TX20MM, 1TX40GF, 2TX40GF, 3TX40GF, 4TX40GF, 1TX40MM, 2TX40MM, 3TX40MM, 4TX40MM.
NUM_STREAMS	The number of independent spatial streams transmitted. Values: 1, 2, 3, 4.
CODE_TYPE	Convolutional or LDPC Values: 0 (convolutional), 1 (LDPC)
SERVICE	The scrambler initialization vector. 16 null bits

TXPWR_LEVEL	The transmit power level. The definition of these levels is up to the implementer. Range: 1-8
LPI	Indicates that this is the last PSDU to be aggregated into the current PPDU Values: true, false
BURST_ DURATION	The length in microseconds of the BURST_DURATION field in the ~~mixed mode~~mixed-mode preamble. Only used when a ~~mixed mode~~mixed-mode TRANSMISSION_MODE is selected. Range: 0-4095

The parameters in Table 002 are defined as part of the RXVECTOR parameter list in the PHY-RXSTART.indicate service primitive. When implementations require the use of these vectors, some or all of these parameters may be used in the vectors.

Table 002—RXVECTOR parameters

Parameter	Value
DATARATE	The rate at which the PSDU was received in Mbit/s. Allowed value depends on the values of TRANSMISSION_MODE and NUM_STREAMS parameters Values: 6.75, 10.125, 13.5, 20.25, 27, 40.5, 54, 60.75, 67.5, 81, 108, 121.5, 135, 162, 182.25, 202.5, 216, 243, 270, 324, 364.5, 405, 432, 486, 540
LENGTH	The length of the PSDU in octets. Range: 1-8191
TRANSMISSIO N_MODE	The transmission type detected during reception of the PPDU Enumerated type: 2TX20GF, 3TX20GF, 4TX20GF, 2TX20MM, 3TX20MM, 4TX20MM, 1TX40GF, 2TX40GF, 3TX40GF, 4TX40GF, 1TX40MM, 2TX40MM, 3TX40MM, 4TX40MM.
NUM_STREAM S	The number of independent spatial streams transmitted. Values: 1,2,3,4.
CODE_TYPE	Convolutional or LDPC Values: 0 (convolutional), 1 (LDPC)
SERVICE	Null
RSSI	The RSSI is a measure of the RF energy received by the MIMO-OFDM PHY, averaged across all RX antennas. The 8-bit value is in the range of 0 to RSSI maximum as described in 17.2.3.2.
LPI	Indicates that this is the last PSDU to be aggregated into the current PPDU Values: true, false
BURST_ DURATION	The length in microseconds of the BURST_DURATION field in the ~~mixed mode~~mixed-mode preamble. Only valid when a ~~mixed mode~~mixed-mode TRANSMISSION_MODE is used. Range: 0-4095

20.3 MIMO-OFDM PLCP sublayer

20.3.1 Introduction

This subclause provides a convergence procedure by which PSDUs are converted to and from PPDUs at the transmitter and receiver. During transmission, the PSDU shall be appended with a PLCP preamble and header to create the PPDU. At the receiver, the PLCP preamble and header are processed to aid in the demodulation and delivery of the PSDU.

Stations implementing the MIMO-OFDM PHY shall use one of two methods of access to the medium. The medium may be reserved solely via a MAC mechanism, as defined in subclause 9.13. Alternatively, a special PLCP frame format may be used to cause non-MIMO-OFDM stations to defer the medium to MIMO-OFDM traffic. Hereafter, these two methods of access shall be known as greenfield and mixed-mode, respectively.

20.3.2 PLCP frame format

Figure 001 shows the format of the PPDU used with greenfield access in the 1TX mode of operation in 40 MHz and the 2TX modes of operation in both 20 and 40 MHz. The PPDU consists of a MIMO-OFDM PLCP preamble, MIMO-OFDM PLCP header, PSDU, and may consist of appended tail bits and pad bits.

The MIMO-OFDM PLCP preamble is composed of a sequence of short and long training symbols. The format of the PLCP preamble is defined in subclause 20.3.3 for each mode of operation in the MIMO-OFDM PHY.

The MIMO-OFDM PLCP header is composed of the SIGNAL-N field and the SERVICE field. The SIGNAL-N field is defined in 20.3.4 and consists of 54 bits that specify all configuration and length-related parameters associated with PPDU transmission. The SERVICE field is composed of 16 bits and is defined in subclause 20.3.5.1.

The SERVICE field of the PLCP header and the PSDU (with tail and pad bits appended, if necessary) are denoted as DATA and may constitute multiple MIMO-OFDM symbols. These symbols are transmitted according to the configuration parameters specified in the SIGNAL-N field.

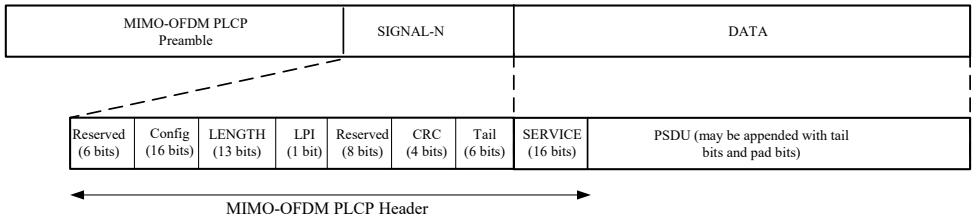

Figure 001 – PPDU frame format: Greenfield access in the 1TX (40 MHz) and 2TX (20 and 40 MHz) modes

Figure 002 shows the format of the PPDU used with greenfield access in the 3TX and 4TX modes of operation in both 20 and 40 MHz. In these modes the MIMO-OFDM PLCP preamble field is extended according to subclause 20.3.3 in order to provide training from the additional transmit antennas.

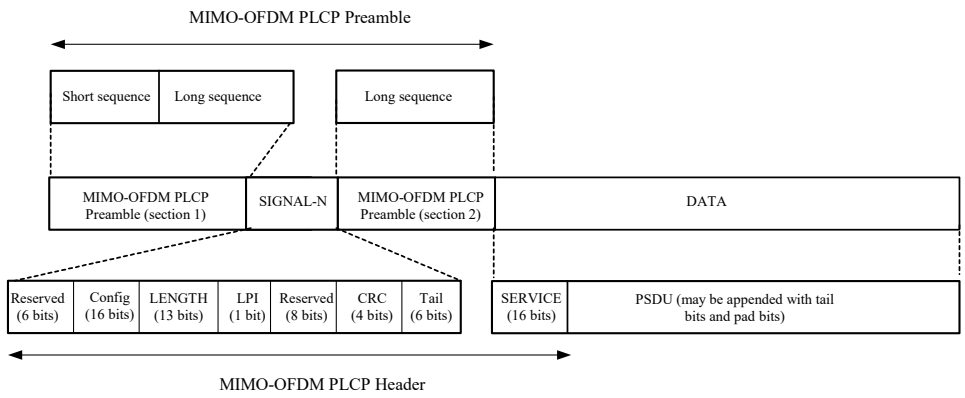

Figure 002 – PPDU frame format: Greenfield access in the 3TX and 4TX modes (20 and 40 MHz)

Figure 003 shows the format of the PPDU used with mixed-mode access in the 1TX mode of operation in 40 MHz and the 2TX modes of operation in both 20 and 40 MHz. The PLCP header in these modes consists of an additional SIGNAL-MM field that conveys information about the MIMO-OFDM PPDU transmission to non-MIMO-OFDM stations, causing them to defer the medium for the duration of the MIMO-OFDM transmission. The SIGNAL-MM field is defined in subclause 20.3.4.

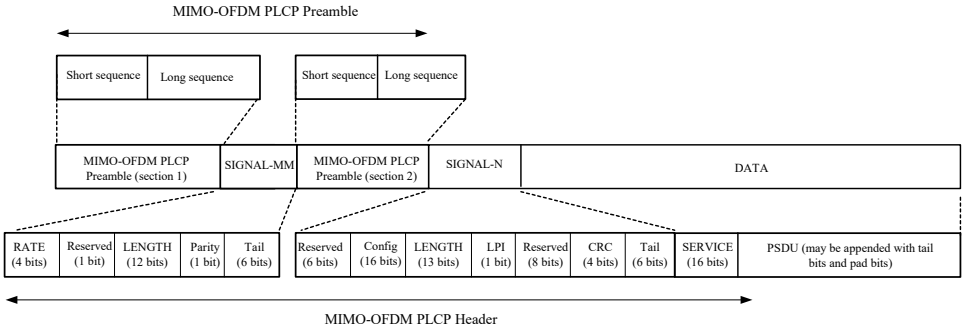

Figure 003 – PPDU frame format: ~~Mixed mode~~Mixed-mode access in the 1TX (40 MHz) and 2TX (20 and 40 MHz) modes

Figures 004 and 005 shows the format of the PPDU used with ~~mixed mode~~mixed-mode access in the 3TX and 4TX modes, operating in 20 MHz and 40 MHz, respectively.

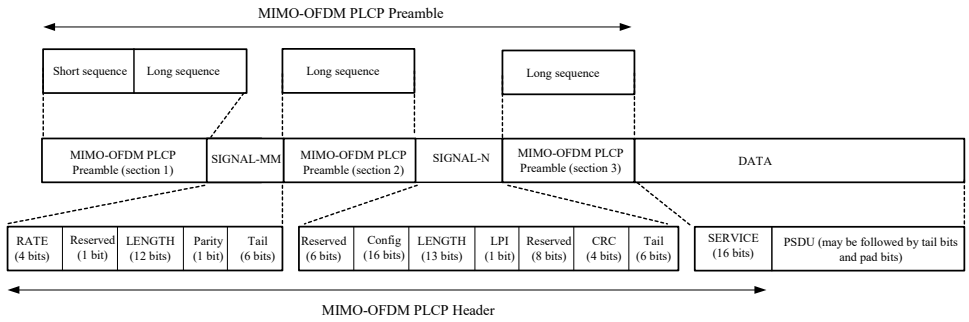

Figure 004– PPDU frame format: ~~Mixed mode~~Mixed-mode access in the 3TX and 4TX modes (20 MHz)

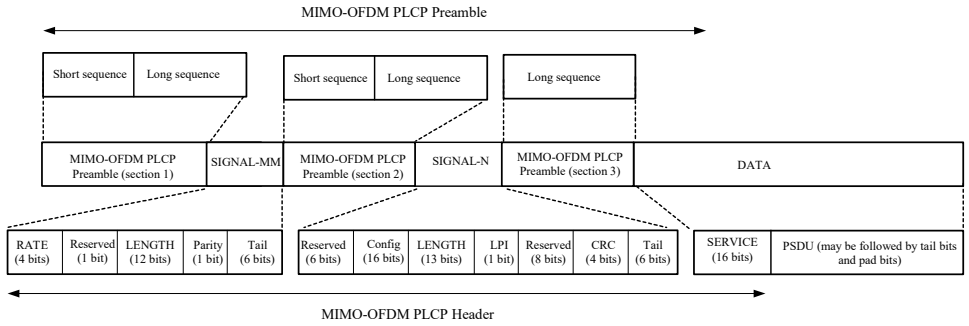

Figure 005– PPDU frame format: ~~Mixed mode~~Mixed-mode access in the 3TX and 4TX modes (40 MHz)

20.3.2.1 Overview of the PPDU encoding process

The encoding process is composed of many detailed steps, which are described fully in later subclauses, as noted below. The following overview intends to facilitate understanding the details described in these subclauses:

a) Produce the PLCP preamble fields for each transmit antenna based on the TRANSMISSION_MODE field of the TXVECTOR. Refer to 20.3.3 for details.

b) Produce the PLCP header field from the LENGTH, DATARATE, TRANSMISSION_MODE, NUM_STREAMS, CODE_TYPE, and SERVICE fields of the TXVECTOR by filling the appropriate bit fields, as described in subclause 20.3.4 and subclause 20.3.5.1.

c) Calculate from the DATARATE, TRANSMISSION_MODE, and NUM_STREAMS fields of the TXVECTOR, the number of data bits per MIMO-OFDM symbol (N_{DBPS}), the code rate (R), the number of bits in each OFDM subcarrier per antenna (N_{BPSC}), the number of coded bits per MIMO-OFDM symbol (N_{CBPS}), the number of spatial streams (N_{SS}), and the number of encoding streams (N_{ES}).

d) Extend the data bit string with “zero” bits (at least 6 bits for each encoding stream) so that the resulting length will be a multiple of the number of data bits per OFDM symbol (N_{DBPS}).

e) Initiate the scrambler with a pseudorandom non-zero state; generate a sequence of scrambled data bits as defined in subclause 20.3.5.4.

f) Demultiplex every other bit of the "data" to the N_{ES} encoding streams, with bit 0 directed to the first encoder.

g) Replace the six scrambled "zero" bits following the "data" of each parallel encoding stream with six nonscrambled "zero" bits (These bits return the convolutional encoder to the "zero state" and are denoted as "tail bits.").

h) Encode each extended, scrambled parallel encoding stream data string with a convolutional encoder (R = 1/2). Omit (puncture) some of the encoder output string (chosen according to "puncturing pattern") to reach the desired "code rate", as defined in subclause 20.3.5.5.

i) Divide the parallel encoded bit strings into groups of N_{CBPS} / N_{ES} bits and multiplex them alternately between the N_{ES} encoders' outputs to obtain a single aggregated bit string.

j) Divide the aggregated bit string into groups of N_{CBPS} bits. Within each group, perform an "interleaving" (reordering) of the bits according to the rule specified in subclause 20.3.5.6. The interleaving parameters are independent of N_{ES}.

k) Divide the resulting coded and interleaved data string into groups of N_{BPSC} bits. For each of the bit groups, convert the bit group into a complex number according to the modulation encoding tables.

l) Divide the complex number string into groups of $N_{SD} \times N_{SS}$ complex numbers, where N_{SD} is the number of data subcarriers per OFDM symbol, and N_{SS} is the number of spatial streams to be transmitted. Map the complex numbers to antennas and subcarriers, as specified in subclause 20.3.5.8. The first N_{SD} complex numbers are modulated on the subcarriers of the first transmit antenna.

m) Insert N_{SP} subcarriers as pilots on each transmit antenna, according to subclause 20.3.5.9.

n) For each group of subcarriers, and on each TX antenna, convert the subcarriers to time domain using inverse Fourier transform. Prepend to the Fourier-transformed waveform a circular extension of itself thus forming a guard interval (GI), and truncate the resulting periodic waveform to a single OFDM symbol length by applying time domain windowing. Refer to 20.3.2.4 for details.

o) Append the OFDM symbols for each antenna one after another, starting with the SIGNAL symbols defined in subclause 20.3.4, and with fields of the PLCP preamble inserted in between if necessary. Refer to 20.3.3 for details.

p) Up-convert the resulting "complex baseband" waveform on each antenna to an RF frequency according to the center frequency of the desired channel and transmit. Refer to 20.3.2.4 and 20.3.8.1 for details.

20.3.2.2 RATE-dependent parameters

When the number of transmitted spatial streams N_{SS} is equal to the number of transmit antennas N_{TX}, the RATE-dependent modulation parameters shall be set according to the values defined in Tables 003, 004, and 005 respectively for the 2TX, 3TX, and 4TX modes in 20 MHz. The RATE-dependent parameters for the 1TX, 2TX, 3TX, and 4TX modes in 40 MHz shall be set according to the values defined in Tables 006, 007, 008, and 009, respectively.

The number of parallel encoding streams N_{ES} shall be 2 for all modes in 40 MHz in which the number of spatial streams N_{SS} is greater than two. N_{ES} shall be 1 for all other modes.

Table 003—Rate-dependent parameters for 20 MHz, N_{SS} = 2 (N_{ES} = 1)

Data rate (Mbits/s)	Modulation	Code rate (R)	Coded bits per subcarrier per antenna (N_{BPSC})	Number of data sub-carriers (N_{SD})	Number of pilots (N_{SP})	Coded bits per MIMO-OFDM symbol (N_{CBPS})	Data bits per MIMO-OFDM symbol (N_{DBPS})	Clause 10.4.4.2 rate code
54	16-QAM	1/2	4	54	2	432	216	73
81	16-QAM	3/4	4	54	2	432	324	74
108	64-QAM	2/3	6	54	2	648	432	75
121.5	64-QAM	3/4	6	54	2	648	486	76
135	64-QAM	5/6	6	54	2	648	540	77

Table 004—Rate-dependent parameters for 20 MHz, N_{SS} = 3 (N_{ES} = 1)

Data rate (Mbits/s)	Modulation	Code rate (R)	Coded bits per subcarrier per antenna (N_{BPSC})	Number of data sub-carriers (N_{SD})	Number of pilots (N_{SP})	Coded bits per MIMO-OFDM symbol (N_{CBPS})	Data bits per MIMO-OFDM symbol (N_{DBPS})	Clause 10.4.4.2 rate code
81	16-QAM	1/2	4	54	2	648	324	78
121.5	16-QAM	3/4	4	54	2	648	486	79
162	64-QAM	2/3	6	54	2	972	648	80
182.25	64-QAM	3/4	6	54	2	972	729	81
202.5	64-QAM	5/6	6	54	2	972	810	82

Table 005—Rate-dependent parameters for 20 MHz, N_{SS} = 4 (N_{ES} = 1)

Data rate (Mbits/s)	Modulation	Code rate (R)	Coded bits per subcarrier per antenna (N_{BPSC})	Number of data sub-carriers (N_{SD})	Number of pilots (N_{SP})	Coded bits per MIMO-OFDM symbol (N_{CBPS})	Data bits per MIMO-OFDM symbol (N_{DBPS})	Clause 10.4.4.2 rate code
108	16-QAM	1/2	4	54	2	864	432	83
162	16-QAM	3/4	4	54	2	864	648	84
216	64-QAM	2/3	6	54	2	1296	864	85
243	64-QAM	3/4	6	54	2	1296	972	86
270	64-QAM	5/6	6	54	2	1296	1080	87

Table 006—Rate-dependent parameters for 40 MHz, N_{SS} = 1 (N_{ES} = 1)

Data rate (Mbits/s)	Modulation	Code rate (R)	Coded bits per subcarrier per antenna (N_{BPSC})	Number of data sub-carriers (N_{SD})	Number of pilots (N_{SP})	Coded bits per MIMO-OFDM symbol (N_{CBPS})	Data bits per MIMO-OFDM symbol (N_{DBPS})	Clause 10.4.4.2 rate code
13.5	BPSK	1/2	1	108	4	108	54	88
20.25	BPSK	3/4	1	108	4	108	81	89
27	QPSK	1/2	2	108	4	216	108	90
40.5	QPSK	3/4	2	108	4	216	162	91
54	16-QAM	1/2	4	108	4	432	216	92
81	16-QAM	3/4	4	108	4	432	324	93
108	64-QAM	2/3	6	108	4	648	432	94
121.5	64-QAM	3/4	6	108	4	648	486	95
135	64-QAM	5/6	6	108	4	648	540	97

Table 007—Rate-dependent parameters for 40 MHz, N_{SS} = 2 (N_{ES} = 1)

Data rate (Mbits/s)	Modulation	Code rate (R)	Coded bits per subcarrier per antenna (N_{BPSC})	Number of data sub-carriers (N_{SD})	Number of pilots (N_{SP})	Coded bits per MIMO-OFDM symbol (N_{CBPS})	Data bits per MIMO-OFDM symbol (N_{DBPS})	Clause 10.4.4.2 rate code
108	16-QAM	1/2	4	108	4	864	432	98
162	16-QAM	3/4	4	108	4	864	648	99
216	64-QAM	2/3	6	108	4	1296	864	100
243	64-QAM	3/4	6	108	4	1296	972	101
270	64-QAM	5/6	6	108	4	1296	1080	102

Table 008—Rate-dependent parameters for 40 MHz, N_{SS} = 3 (N_{ES} = 2)

Data rate (Mbits/s)	Modulation	Code rate (R)	Coded bits per subcarrier per antenna (N_{BPSC})	Number of data sub-carriers (N_{SD})	Number of pilots (N_{SP})	Coded bits per MIMO-OFDM symbol (N_{CBPS})	Data bits per MIMO-OFDM symbol (N_{DBPS})	Clause 10.4.4.2 rate code
162	16-QAM	1/2	4	108	4	1296	648	103
243	16-QAM	3/4	4	108	4	1296	972	104
324	64-QAM	2/3	6	108	4	1944	1296	105
364.5	64-QAM	3/4	6	108	4	1944	1458	106
405	64-QAM	5/6	6	108	4	1944	1620	107

Table 009—Rate-dependent parameters for 40 MHz, N_{SS} = 4 (N_{ES} = 2)

Data rate (Mbits/s)	Modulation	Code rate (R)	Coded bits per subcarrier per antenna (N_{BPSC})	Number of data sub-carriers (N_{SD})	Number of pilots (N_{SP})	Coded bits per MIMO-OFDM symbol (N_{CBPS})	Data bits per MIMO-OFDM symbol (N_{DBPS})	Clause 10.4.4.2 rate code
216	16-QAM	1/2	4	108	4	1728	864	109
324	16-QAM	3/4	4	108	4	1728	1296	110
432	64-QAM	2/3	6	108	4	2592	1728	111
486	64-QAM	3/4	6	108	4	2592	1944	112
540	64-QAM	5/6	6	108	4	2592	2160	113

20.3.2.3 Timing related parameters

Table 010 is a list of timing parameters associated with the MIMO-OFDM PLCP.

Table 010—Timing-related parameters

Parameter	Value (20 MHz modes)	Value (40 MHz modes)	Remarks
N_{SD} : Number of data subcarriers	54	108	
N_{SP} : Number of pilot subcarriers	2	4	
N_{ST} : Number of subcarriers, total	56	112	$N_{ST} = N_{SD} + N_{SP}$
N_{OT}: Index of outermost populated subcarrier	28	58	
N_{TX}: Number of transmit antennas	2,3,4	1,2,3,4	
Δ_F: Subcarrier frequency spacing	0.3125 MHz	0.3125 MHz	Δ_F = 20/64 = 40/128 MHz
T_{FFT} : IFFT/FFT period	3.2 µs	3.2 µs	$T_{FFT} = 1/\Delta_F$
T_{GI} : GI duration	0.8 µs	0.8 µs	(T_{FFT} /4)
T_{GI2} : Training symbol guard duration	1.6 µs	1.6 µs	
T_{SYM} : Symbol interval	4 µs	4 µs	($T_{GI} + T_{FFT}$)

20.3.2.4 Mathematical conventions in the signal descriptions

The transmitted signal will be described in a complex baseband signal notation. The RF (radio frequency) signal issued from the antenna is related to the complex baseband signal by the following relation:

$$r_{RF}(t) = \mathrm{Re}\{r(t)\exp(j2\pi f_c t)\} \tag{1}$$

where Re(.) represents the real part of the complex argument, and f_c denotes the carrier frequency. The actual RF signal over the air is the sum of RF signals emanated from each transmit antenna.

The transmitted baseband signal from any antenna is composed of contributions from several OFDM symbols, including preamble, signal, and data. Each symbol is constructed as an inverse Fourier transform of a set of coefficients C_k, with C_k defined later as data, pilots, or training symbols in subclause 20.3.3 through 20.3.5:

$$r_{SYMBOL}(t) = w_{SYMBOL}(t) \sum_{k=-N_{OT}}^{N_{OT}} C_k \exp\left(j2\pi k\Delta_F\left(t - T_{GUARD}\right)\right). \tag{2}$$

The parameters Δ_F and N_{OT} are defined in Table 010. The resulting waveform is periodic with a period of $T_{FFT} = 1/\Delta_F$. Shifting the time by T_{GUARD} creates the "cyclic prefix" used in OFDM to avoid ISI from the previous symbol. Three kinds of T_{GUARD} are defined: for the short training sequence (= 0µs), for the long training sequence (=T_{GI2}), and for data OFDM symbols (=T_{GI}). Informative considerations related to the windowing function $w_{SYMBOL}(t)$ and other implementation aspects, as specified in subclause 17.3.2.4, may also apply on a per-antenna basis in the MIMO-OFDM PHY.

The common way to implement the inverse Fourier transform, as shown in Equation (2), is by an inverse Fast Fourier Transform (IFFT) algorithm. If, for example, a 128-point IFFT is used to implement the 40 MHz transmission modes, the coefficients 3 to 58 are mapped to the same numbered IFFT inputs, while the coefficients

-58 to -3 are copied into IFFT inputs 70 to 125. The rest of the inputs, 59 to 69, 1, 2, 126, 127, as well as the 0 (dc) input, shall be set to zero. This mapping is illustrated in Figure 006. After performing an IFFT, the output is cyclically extended to the desired length.

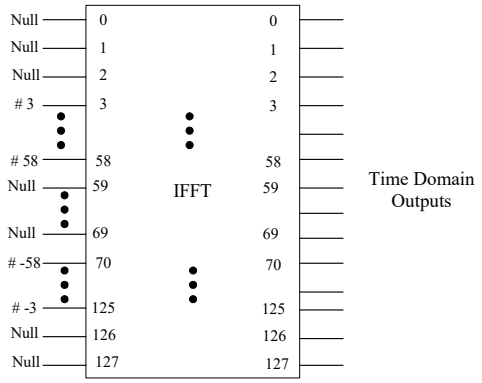

Figure 006– Inputs and outputs of 128-point IDFT for 40 MHz data transmission

20.3.3 PLCP preamble (SYNC)

The PLCP preamble field is used for synchronization. It consists of a sequence of short symbols and long symbols that are transmitted simultaneously from all transmit antennas, as described in this subclause.

Figure 007 shows the PLCP preamble format for greenfield 2TX mode in 20 MHz. The PLCP preamble is followed in this mode by the SIGNAL-N field and DATA. The total duration of the training symbols is 16 µsec. The short MIMO-OFDM training sequence transmitted from the first antenna consists of 12 subcarriers, which are modulated by elements of the sequence SS_{20}, given by

$SS_{20}[-28,28] = \sqrt{7/3} \times$ {0, 0, 0, 0, 1+j, 0, 0, 0, -1-j, 0, 0, 0, 1+j, 0, 0, 0, -1-j, 0, 0, 0, –1–j, 0, 0, 0, 1+j, 0, 0, 0, 0, 0, 0, 0, -1-j, 0, 0, 0, -1-j, 0, 0, 0, 1+j, 0, 0, 0, 1+j, 0, 0, 0, 1+j, 0, 0, 0, 1+j, 0, 0, 0, 0}. (3)

The second antenna transmits a cyclically shifted version of the sequence transmitted from the first antenna, such that the first sample of the short sequence transmitted from the first antenna is the sample that is transmitted 400 nsec after the start of the short sequence on the second antenna. This is denoted by "(400 ns cs)" in Figure 007. More generally, an indicator "S (t_0 ns cs)" in Figures 007 through 016 denotes that the transmitted sequence $r'(t)$ is obtained by cyclically shifting by t_0 nsec, the time-domain sequence $r(t)$ corresponding to frequency domain sequence S:

$$r'(t) = r(t - t_0 \text{ ns}). \quad (4)$$

The indicator "GI" or "GI2" in these figures denotes respectively the last T_{GI} or T_{GI2} duration of waveform of the immediately ensuing OFDM symbol, prepended to the OFDM symbol as a guard interval.

The short sequence is followed by a long OFDM training sequence which is generated by modulating the elements of the sequence

LS_{20} [-28..28] = {1, 1, 1, 1, -1, -1, 1, 1, -1, 1, -1, 1, 1, 1, 1, 1, 1, -1, -1, 1, 1, -1, 1, -1, 1, 1, 1, 1, 0, 1, -1, -1, 1, 1, -1, 1, -1, 1, -1, -1, -1, -1, -1, 1, 1, -1, -1, 1, -1, 1, -1, 1, 1, 1, 1, -1, -1}

~~(~~(5)

according to the equation

$$r_{LONG}(t) = w_{TLONG}(t) \sum_{k=-N_{ST}/2}^{N_{ST}/2} LS_{20}[k] \exp\left(j2\pi k\Delta_F \left(t - T_{GI2}\right)\right), \quad (6)$$

where T_{GI2} = 1.6 µsec. Two periods of the long symbol are transmitted for improved channel estimation accuracy. The long training sequence is also transmitted simultaneously from both antennas. The second antenna transmits a 1600 nsec cyclically shifted version of the long training symbols transmitted from the first antenna.

The PLCP preamble format for 2TX mixed-mode operation in 20 MHz is shown in Figure 008. The definition of the long and short sequences, as well as relative cyclic shifts between transmit antennas in this mode shall follow the description provided in Figure 008. The first and second TX antennas simultaneously transmit the first and second rows respectively of the MIMO-OFDM training structure shown in the figure.

Figure 009 and 010 define the PLCP preamble format for the 3TX and 4TX modes in 20 MHz, with greenfield access and mixed-mode access respectively. In the 3TX modes, only the first three rows shown in the corresponding MIMO-OFDM training structure are transmitted.

Figures 011, 013, and 015 show the PLCP preamble format for the 1TX, 2 TX, and 3TX/4TX greenfield modes in 40 MHz. The short sequence in these modes are obtained by modulating the elements of the sequence

SS_{40GF} [-58,58] = $\sqrt{2}$ ×{0, 0, -1-j, 0, 0, 0, 1+j, 0, 0, 0, -1-j, 0, 0, 0, -1-j, 0, 0, 0, 1+j, 0, 0, 0, 1+j, 0, 0, 0, -1-j, 0, 0, 0, 1+j, 0, 0, 0, 1+j, 0, 0, 0, -1-j, 0, 0, 0, 1+j, 0, 0, 0, -1-j, 0, 0, 0, 1+j, 0, 0, 0, -1-j, 0, 0, 0, 1+j, 0, 0, 0, 1+j, 0, 0, 0, 1+j, 0, 0, 0, 1+j, 0, 0, 0, 1+j, 0, 0, 0, -1-j, 0, 0, 0, -1-j, 0, 0, 0, -1-j, 0, 0, 0, 1+j, 0, 0, 0, 1+j, 0, 0, 0, -1-j, 0, 0, 0, -1-j, 0, 0, 0, -1-j, 0, 0} (7)

on the subcarriers of the OFDM signal. The ensuing long sequence for 40 MHz greenfield operation is defined by the sequence

LS_{40GF} [-58..58] = {1, 1, -1, -1, 1, 1, -1, 1, -1, 1, 1, 1, 1, 1, 1, -1, -1, 1, 1, -1, 1, -1, 1, 1, 1, 1, -1, 1, -1, -1, 1, 1, -1, 1, -1, -1, -1, -1, -1, -1, 1, 1, -1, -1, 1, -1, 1, -1, 1, 1, 1, 1, 1, 1, -1, -1, 1, 1, -1, 1, -1, 1, -1, -1, -1, -1, 0, 0, 0, 0, 0, 1, 1, 1, 1, 1, -1, -1, 1, 1, -1, 1, -1, 1, 1, 1, 1, 1, 1, 1, -1, -1, 1, 1, -1, 1, -1, 1, -1, -1, -1, -1, -1, 1, 1, -1, -1, 1, -1, 1, -1, 1, 1, 1} (8)

The ~~mixed mode~~mixed-mode training structures for 1TX, 2TX, and 3TX/4TX modes in 40 MHz are defined in Figure 012, 014, and 016 respectively. The additional short and long sequences used in these modes are defined by the following frequency domain sequences:

SS_{40MM} [-58..58] = $\sqrt{7/3}$ ×{0, 0, 1+j, 0, 0, 0, -1-j, 0, 0, 0, 1+j, 0, 0, 0, -1-j, 0, 0, 0, -1-j, 0, 0, 0, 1+j, 0, 0, 0, 0, 0, 0, 0, -1-j, 0, 0, 0, -1-j, 0, 0, 0, 1+j, 0, 0, 0, 1+j, 0, 0, 0, 1+j, 0, 0, 0, 1+j, 0, 0, 0, 0, 0, 0, 0, 0, 0, 0, 0, 0, 0, 0, 1+j, 0, 0, 0, -1-j, 0, 0, 0, 1+j, 0, 0, 0, -1-j, 0, 0, 0, -1-j, 0, 0, 0, 1+j, 0, 0, 0, 0, 0, 0, 0, -1-j, 0, 0, 0, -1-j, 0, 0, 0, 1+j, 0, 0, 0, 1+j, 0, 0, 0, 1+j, 0, 0, 0, 1+j, 0, 0} (9)

LS_{40MM} [-58..58] = {1, 1, -1, -1, 1, 1, -1, 1, -1, 1, 1, 1, 1, 1, 1, -1, -1, 1, 1, -1, 1, -1, 1, 1, 1, 1, 1, 0, 1, -1, -1, 1, 1, -1, 1, -1, 1, -1, -1, -1, -1, -1, 1, 1, -1, -1, 1, -1, 1, -1, 1, 1, 1, 1, 1, 1, -1, -1, 1, 1, -1, 1, -1, 1, -1, -1, -1, -1, 0, 0, 0, 0, 0, 1, 1, 1, 1, 1, -1, -1, 1, 1, -1, 1, -1, 1, 1, 1, 1, 1, 1, 1, -1, -1, 1, 1, -1, 1, -1, 1, -1, -1, -1, -1, -1, 1, 1, -1, -1, 1, -1, 1, -1, 1, 1, 1, 1, 0, 1, -1, -1, 1, 1, -1, 1, -1, 1, -1, -1, -1, -1, -1, 1, 1, -1, -1, 1, -1, 1, -1, 1, 1, 1}. (10)

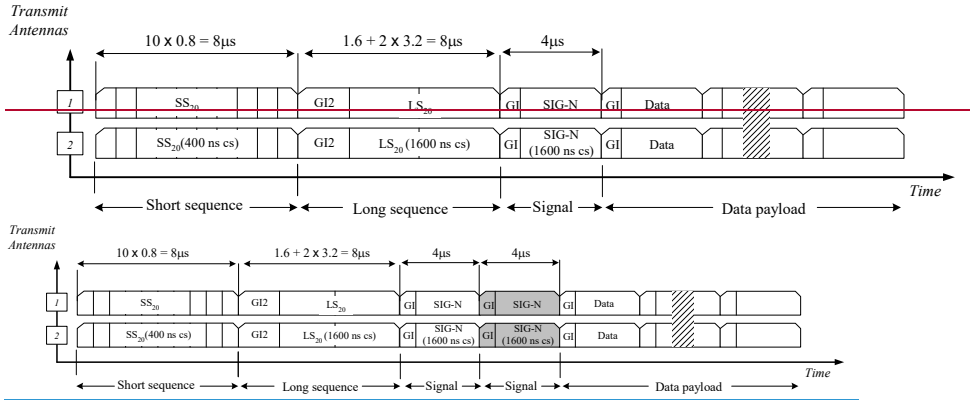

Figure 007 – MIMO-OFDM Training structure for N_{TX} = 2, 20 MHz, greenfield operation. The shaded field indicates the optional duplicate SIG-N for extended range communication.

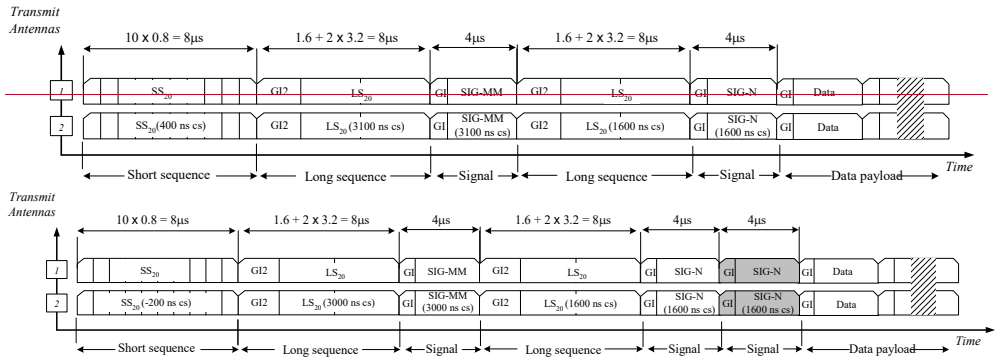

Figure 008 – MIMO-OFDM Training structure for N_{TX} = 2, 20 MHz, ~~mixed mode~~mixed-mode operation. The shaded field indicates the optional duplicate SIG-N for extended range communication.

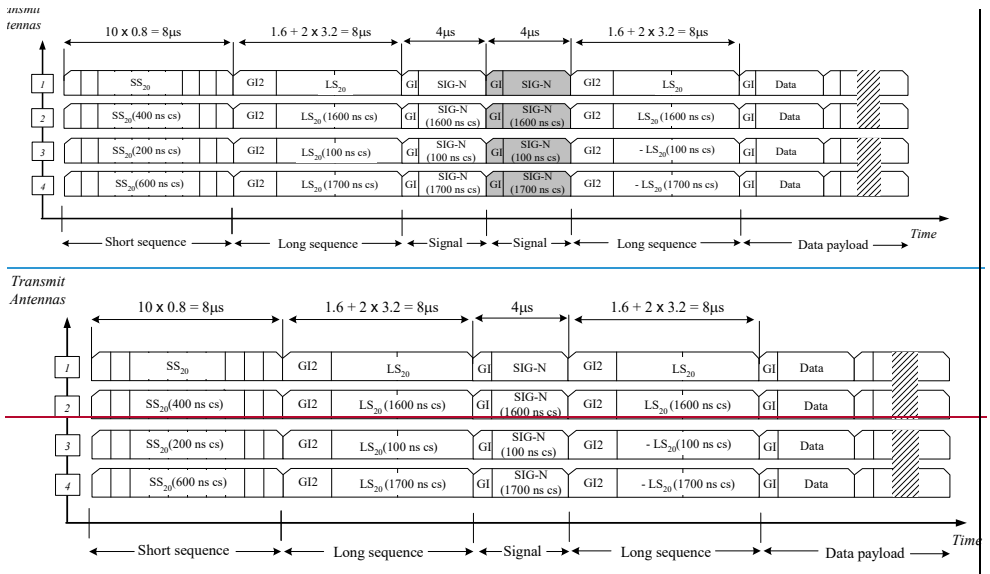

Figure 009 – MIMO-OFDM Training structure for N_{TX} = 3 and 4, 20 MHz, greenfield operation. The shaded field indicates the optional duplicate SIG-N for extended range communication.

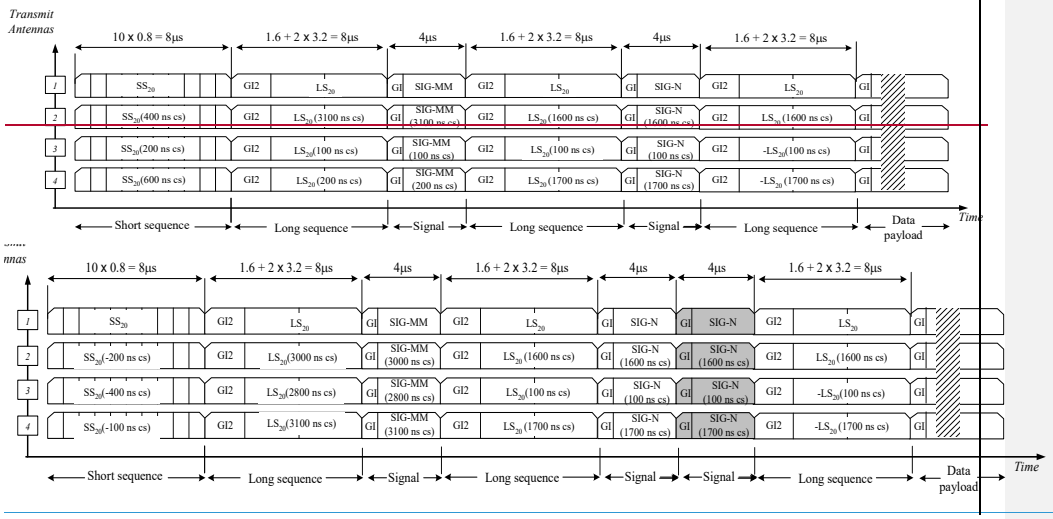

Figure 010 – MIMO-OFDM Training structure for N_{TX} = 3, 4, 20 MHz, ~~mixed mode~~mixed-mode operation. The shaded field indicates the optional duplicate SIG-N for extended range communication.

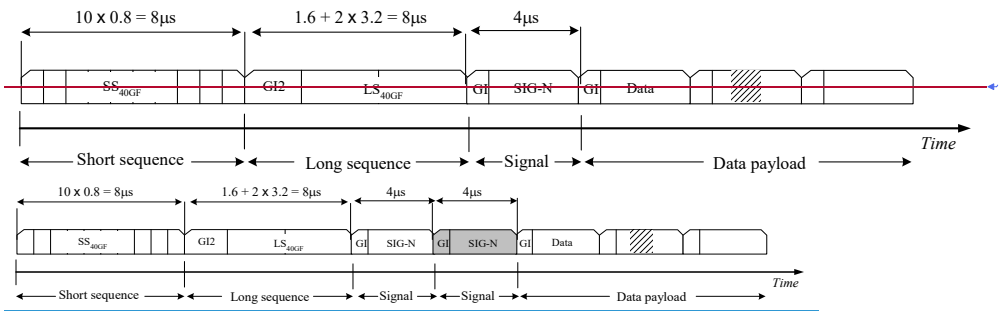

Figure 011 – MIMO-OFDM Training structure for N_{TX}=1, 40 MHz, greenfield operation. The shaded field indicates the optional duplicate SIG-N for extended range communication.

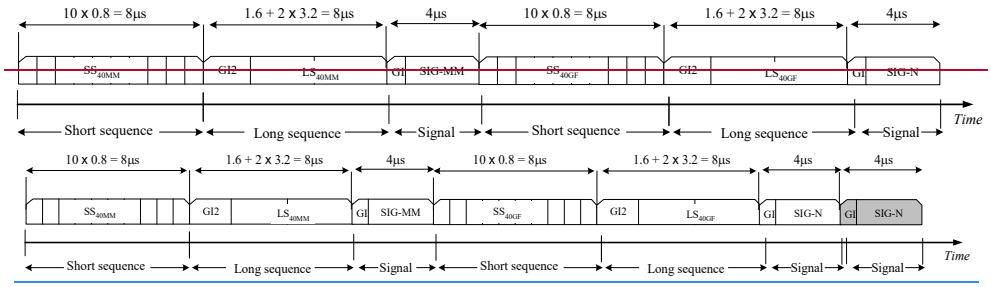

Figure 012 – MIMO-OFDM Training structure for N_{TX}=1, 40 MHz, ~~mixed mode~~mixed-mode operation. The shaded field indicates the optional duplicate SIG-N for extended range communication.

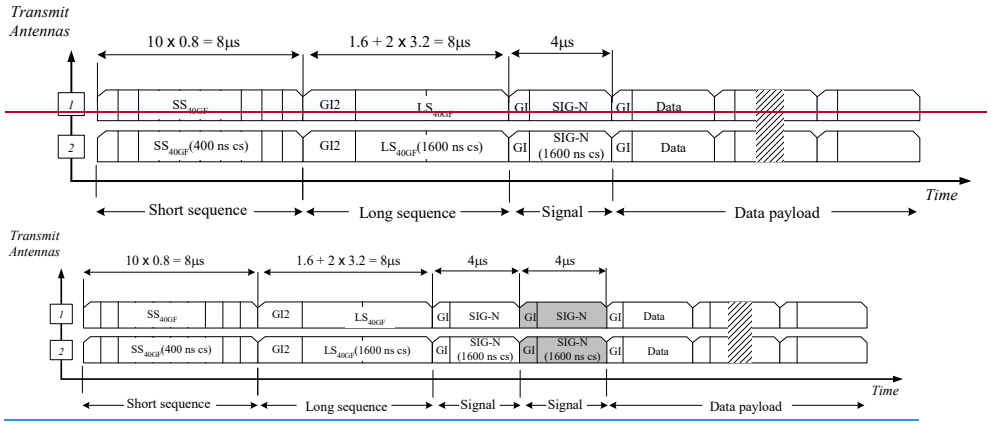

Formatted: Left

Figure 013 – MIMO-OFDM Training structure for N_{TX} = 2, 40 MHz, greenfield operation. The shaded field indicates the optional duplicate SIG-N for extended range communication.

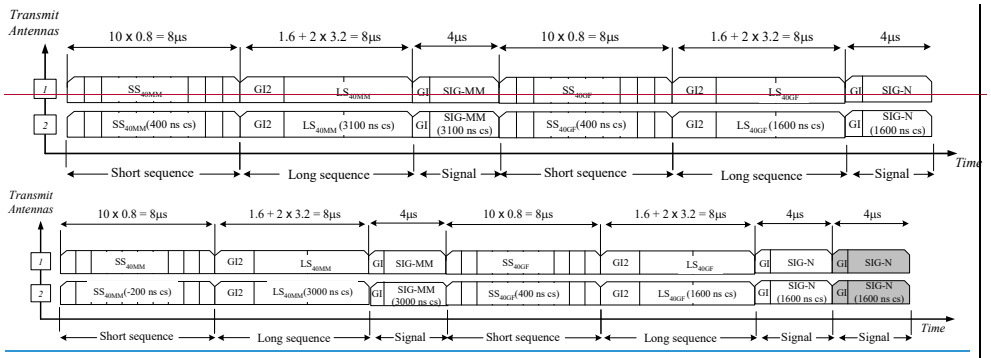

Figure 014 – MIMO-OFDM Training structure for N_{TX} = 2, 40 MHz, ~~mixed mode~~mixed-mode operation. The shaded field indicates the optional duplicate SIG-N for extended range communication.

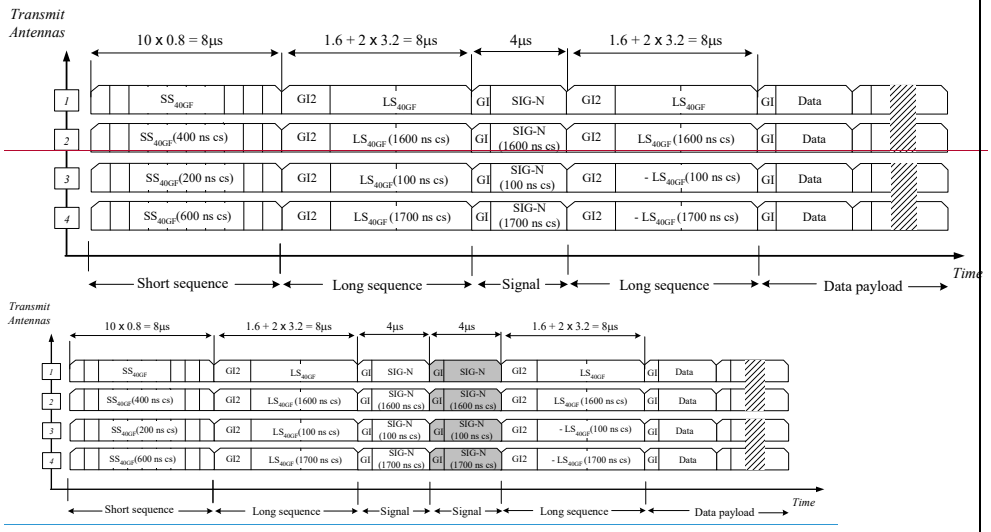

Figure 015 – MIMO-OFDM Training structure for N_{TX} = 3 and 4, 40 MHz, greenfield operation. The shaded field indicates the optional duplicate SIG-N for extended range communication.

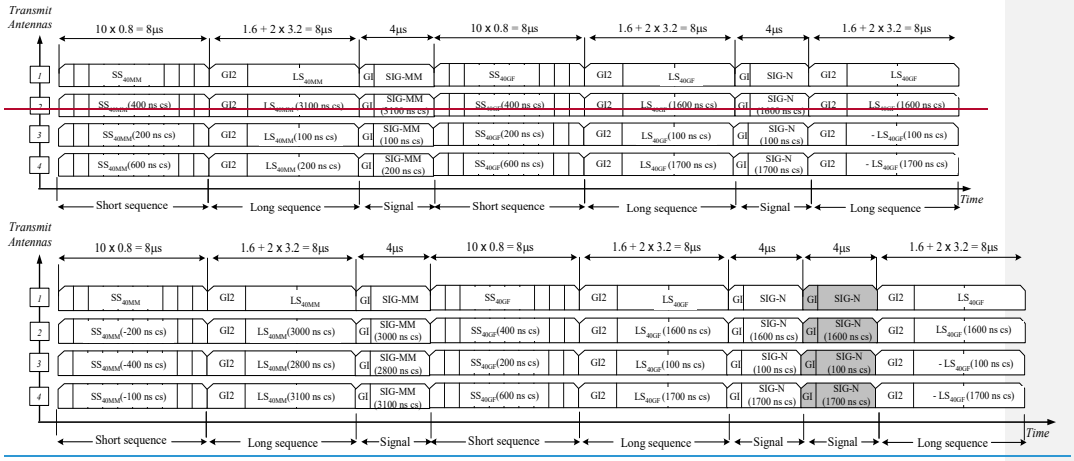

Figure 016 – MIMO-OFDM Training structure for N_{TX} = 3, 4, 40 MHz, ~~mixed mode~~mixed-mode operation.
The shaded field indicates the optional duplicate SIG-N for extended range communication.

Formatted: Style Caption - Figure

20.3.4 Signal fields (SIG-N and SIG-MM)

Formatted: English (United States)

The SIGNAL-N field (SIG-N) is separately defined for a mandatory standard configuration and an optional "extended communication range" configuration described below.

In the mandatory standard configuration, SIG-N is composed of a single MIMO-OFDM symbol that provides all length and configuration parameters associated with a MIMO-OFDM PPDU.

In the extended communication range configuration, the corresponding SIG-N field is duplicated leading to a final length of two MIMO-OFDM symbols. The extended communication range configuration is only used with the optional NTX-STBC modes (described in subclause 20.3.5.10) and only with rate-1/2 encoding using BPSK modulation.

The SIGNAL-N field is composed of 54 bits, which shall be interpreted according to the bit assignment specified in Figure 017 and Table 011. The REXT bit, indicating extended range communication, can only be set in the optional NTX-STBC modes with rate-1/2 encoding and BPSK modulation.

~~The SIGNAL-N field (SIG-N) is composed of a single MIMO-OFDM symbol that provides all length and configuration parameters associated with a MIMO-OFDM PPDU. The SIGNAL-N field is composed of 54 bits, which shall be interpreted according to the bit assignment specified in Figure 017 and Table 011.~~

Table 011—SIG-N field bit assignment

Bits	Field	Subfield	Parameter	Values
B0 : b5	RSVD		Reserved bits	111111, Bits shall be ignored at the receiver
B6 : b21	CONFIG		Configuration	
B6 : b8		NSS	Number of spatial streams	000: 1, 001: 2, 010: 3, 011: 4
B9 : b11		NTX	Number of transmit antennas	000: 1, 001: 2, 010: 3, 011: 4
B12 : b13		BW	Bandwidth	00: 20 MHz, 01: 40 MHz
B14: b16		R	Code rate	000: 1/2, 001: 2/3, 010: 3/4, 011: 5/6
B17 : b18		CT	ECC type	00 : convolutional, 01 : LDPC
B19 : b21		CON	Constellation type	000: BPSK, 001: QPSK, 010: 16-QAM, 011: 64-QAM
B22 : b34	LEN		Length	Number of bytes in the payload
b35	LPI		Last PSDU indicator	1 indicates that this is the last PSDU to be aggregated into the current PPDU
b36	REXT		Standard or extended communication range configuration	0 indicates the standard configuration, 1 indicates the extended communication range configuration
b37~~6~~ : b43	RSVD		Reserved	00000000, Bits shall be ignored at the receiver
b44 : b47	CRC		Cyclic Redundancy Check	CRC calculated on bits 0-43 using generator polynomial x^4+x+1
b48 : b53	TAIL			000000

In all 20 MHz modes, the encoding of the single SIG-N MIMO-OFDM symbol shall be performed with QPSK modulation of the subcarriers of the first antenna and shall use convolutional coding at R = 1/2. In all 40 MHz modes, the encoding of the single SIG-N MIMO-OFDM symbol shall be performed with BPSK modulation of the subcarriers of the first antenna and shall use using convolutional coding at R = 1/2. The contents of the SIG-N field are not scrambled.

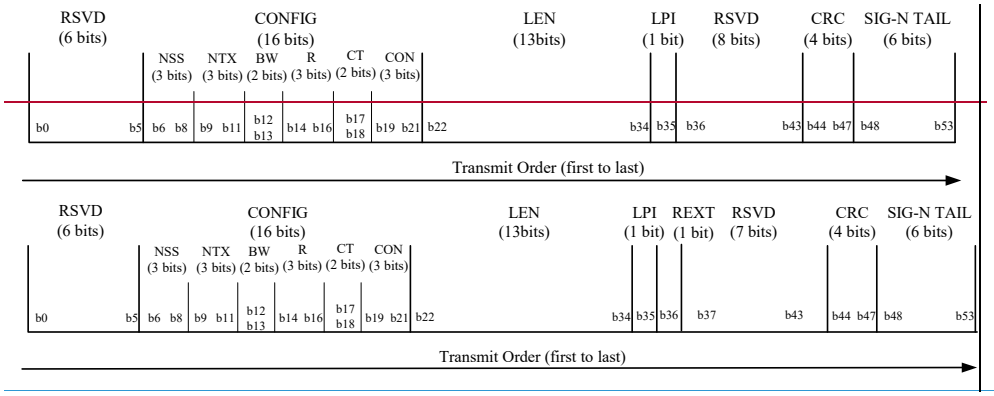

Figure 017 – SIG-N field bit assignment

The SIG-N MIMO-OFDM symbol is transmitted simultaneously from all TX antennas in all modes, with the same values of relative cyclic shift between antennas as are used to transmit the long training symbol preceding

the SIG-N symbol. The value of the cyclic shift in each operating mode is specified in Figures 007 through 016 in subclause 20.3.3.

With mixed-mode access, another symbol, denoted as SIGNAL-MM (SIG-MM) is sent in the PLCP header. The SIG-MM field is encoded and transmitted from the first antenna as per IEEE 802.11a-1999 subclause 17.3.4. The remaining antennas simultaneously transmit the same OFDM symbol, with relative cyclic shifts defined in subclause 20.3.3. The reserved bit in the SIG-MM field shall be set to signal a MIMO-OFDM PPDU transmission. The duration for which the medium will be used by the MIMO-OFDM PPDU transmission is signaled to non MIMO-OFDM stations via the LENGTH and RATE fields of the SIG-MM symbol.

In 40 MHz mixed-mode operation, the SIG-MM field shall be transmitted such that it can be decoded by non-MIMO-OFDM stations operating in either the upper or the lower 20 MHz band.

20.3.5 DATA field

The DATA field contains the SERVICE field, the PSDU, the TAIL bits, and the PAD bits, if needed, as described in 20.3.5.2 and 20.3.5.4. All bits in the DATA field except the TAIL bits are scrambled, as described in 20.3.5.4.

20.3.5.1 Service field (SERVICE)

The IEEE 802.11 SERVICE field has 16 bits, which shall be denoted as bits 0-15. The bit 0 shall be transmitted first in time. The bits 0-6 of the SERVICE field, which are transmitted first, are set to zeros and are used to synchronize the descrambler in the receiver. The remaining 9 bits (7-15) of the SERVICE field shall be reserved for future use. All reserved bits shall be set to zero. Refer to Figure 112, IEEE 802.11a-1999 subclause 17.3.5.1.

20.3.5.2 PPDU tail bits

The PPDU tail bits shall follow IEEE 802.11a-1999 subclause 17.3.5.2.

20.3.5.3 PAD bits

The number of bits in the DATA field shall be a multiple of N_{CBPS}, the number of coded bits in an OFDM symbol. To achieve that, the length of the message is extended so that it becomes a multiple of N_{DBPS}, the number of data bits per OFDM symbol. At least 6 bits per encoding stream (N_{ES}) are appended to the message, in order to accommodate the TAIL bits, as described in 20.3.5.2. The number of MIMO-OFDM symbols, N_{SYM}; the number of bits in the DATA field, N_{DATA}; and the number of pad bits, N_{PAD}, are computed from the length of the PSDU (LENGTH) as follows:

$$N_{SYM} = \text{Ceiling}\left((16 + 8 \times \text{LENGTH} + 6 \times N_{ES})/N_{DBPS}\right) \quad (11)$$

$$N_{DATA} = N_{SYM} \times N_{DBPS} \quad (12)$$

$$N_{PAD} = N_{DATA} - (16 + 8 \times \text{LENGTH} + 6 \times N_{ES}) \quad (13)$$

The appended bits ("pad bits") are set to "zeros" and are subsequently scrambled with the rest of the bits in the DATA field.

20.3.5.4 PLCP data scrambler and descrambler

The PPDU data scrambler and descrambler shall follow IEEE 802.11a-1999 subclause 17.3.5.4.

20.3.5.5 Convolutional encoder

The DATA field, composed of SERVICE, PSDU, tail, and pad parts, shall be coded with a convolutional encoder that conforms to IEEE 802.11a-1999 subclause 17.3.5.5 for code rates of R = 1/2, 2/3, and 3/4. Additionally, the code rate of R = 5/6 shall be implemented according to the puncturing pattern illustrated in Figure 018.

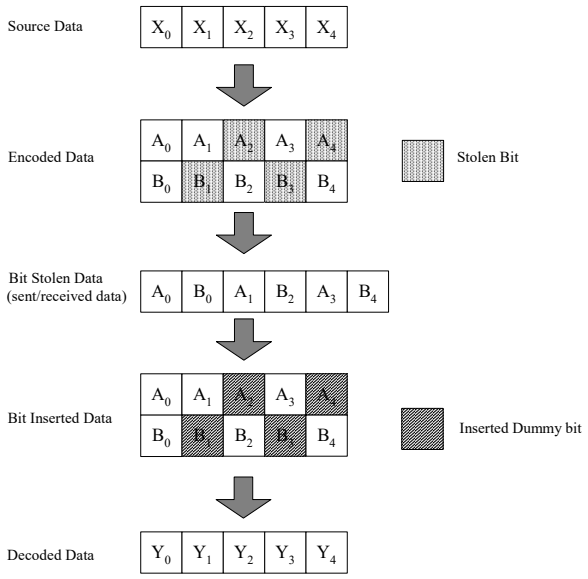

Figure 018 – An illustration of the bit stealing and bit insertion procedure for R = 5/6

20.3.5.6 Interleaver

All encoded bits shall be interleaved by a block interleaver with a block size equal to the number of bits in a single MIMO-OFDM symbol, N_{CBPS}. The interleaver is defined by the following series of permutations.

We shall denote by k the index of the coded bits before interleaving, $k = 0, 1 \ldots N_{CBPS}-1$. $n = 0, 1 \ldots N_{SS}-1$ denotes the index of the spatial streams. The bits are first distributed across spatial streams by inputting the bit with index $k_n \times N_{SS} + n$ into the nth spatial stream. This is illustrated in Figure 019.

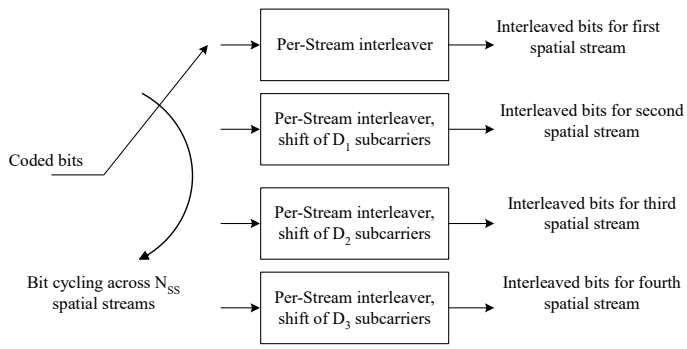

Figure 019 – Illustration of the interleaver function

The interleaver for spatial stream n within its block of N_{CBPS}/N_{SS} bits is defined by the following relations.

$$k = k_n \times N_{ss} + n$$

$$i = ((N_{CBPS}/N_{SS})/I_{DEPTH})\,(k_n \bmod I_{DEPTH}) + \text{floor}\,(k_n/I_{DEPTH}) \qquad k_n = 0, 1 \ldots (N_{CBPS}/N_{SS})-1$$

$$j = s \times \text{floor}(i/s) + (i + N_{CBPS}/N_{SS} - \text{floor}\,(I_{DEPTH} \times i / (N_{CBPS}/N_{SS}))) \bmod s \qquad s = \max(N_{BPSC}/2,1)$$

$$j_n = (j + N_{CBPS}/N_{SS} - N_{BPSC}\,D_n) \bmod (N_{CBPS}/N_{SS}). \qquad (14)$$

The parameter D_n which denotes the shift in subcarriers for spatial stream n is given by

$$D_n = 5n. \qquad (15)$$

The interleaving depth I_{DEPTH} shall conform to the values given in Table 012.

Table 012—Interleaving parameters

N_{SS}	N_{SD}	I_{DEPTH}
1, 2, 3, 4	54	6
2,3,4	108	6
1	108	12

The deinterleaver, which performs the inverse relation, is defined by the following series of permutations.

$$k_d = \text{mod}\,(k_n + N_{CBPS}/N_{SS} + 2sD_n) \bmod (N_{CBPS}/N_{SS})$$

$$i_d = s\,\text{floor}(k_d / s) + (k_d + \text{floor}\,(I_{DEPTH} \times k_d / (N_{CBPS}/N_{SS}))) \bmod s$$

$$j_{dn} = I_{DEPTH} \times i_d - ((N_{CBPS}/N_{SS}) - 1) \times \text{floor}\ (I_{DEPTH} \times i_d / (N_{CBPS}/N_{SS})). \quad (16)$$

where s and D_n are as defined for the interleaver.

20.3.5.7 Low density parity check codes (optional ECC)

This subclause describes the LDPCCs to be optionally used in the MIMO-OFDM system as high-performance ECC technique, instead of the convolutional code (20.3.5.5). The rate-dependent parameters in subclause 20.3.2.2 shall still apply.

When this subclause applies, the following clauses are to be considered no more applicable:

20.3.2.1: changes needed, as described in 20.3.5.7.3;
20.3.5.2: not used;
20.3.5.3: replaced by 20.3.5.7.3;
20.3.5.5: replaced by 20.3.5.7.4;
20.3.5.6: not used.

20.3.5.7.1 LDPCC Code Rates and Block Sizes

The supported code rates, information block size, and coded block size are described in Table 013.

Table 013— LDPCC parameters

Code rate (R)	LDPC information bits (bits)	LDPC codeword length (bits)
1/2	972	1944
2/3	1296	1944
3/4	1458	1944
5/6	1620	1944

20.3.5.7.3 LDPCC PPDU encoding process

a) Produce the PLCP preamble fields for each transmit antenna based on the TRANSMISSION_MODE field of the TXVECTOR. Refer to 20.3.3 for details.

b) Produce the PLCP header field from the LENGTH, DATARATE, and SERVICE fields of the TXVECTOR by filling the appropriate bit fields, as described in subclause 20.3.4 and subclause 20.3.5.1.

c) Compute the integer number of LDPCC codewords to be transmitted, L_1, and the possible remainder K_1.

$$L_1 = \text{ceil}(\ (\text{LENGTH} \times 8 + 16)/1944/R),$$

$$K_1 = \text{rem}(\ (\text{LENGTH} \times 8 + 16)\ ,1944 \times R).$$
(17)

d) If $K_1 > 0$ compute the number of zeros for padding in order to encode the last codeword as

$$N_{P1} = 1944 \times R - K_1. \quad (18)$$

These bits will not be transmitted nor scrambled. If $K_1 > 0$, the last frame has an effective information frame (i.e. information frame excluding padded zeros) of size K_1, generally less than *k*. The last codeword includes a fixed number of parity bits equal to $p = (1944 - k)$. This implies the code rate for the last codeword is different from the overall target code rate and is given by:

$$\frac{K_1}{K_1 + (1944 - k)}. \tag{19}$$

e) Compute the number of coded bits to be transmitted (including the shortened codeword) as

$$L_2 = \begin{cases} 1944 \times L_1, & K_1 = 0 \\ 1944 \times (L_1 - 1) + 1944 \times (1 - R) + K_1, & K_1 \neq 0 \end{cases} \tag{20}$$

f) Compute the integer number of MIMO-OFDM symbols N_{S1} and the possible reminder R_{S1}:

$$N_{S1} = \mathrm{ceil}(L_2/N_{CBPS}),$$

$$R_{S1} = \mathrm{rem}(L_2, N_{CBPS}). \tag{21}$$

g) If $R_{S1} > 0$ append N_{P2} zeros to info bits in order to fill an integer number of MIMO-OFDM symbols

$$N_{P2} = N_{CBPS} - R_{S1}. \tag{22}$$

h) The service field at the beginning of the resulting sequence is used to initialize a scrambler, which is then used to scramble the rest of the sequence including the zeros appended in step g).

k) The resulting PSDU is then coded by the LDPCC at the proper code rate (R) and block size (i.e. 1944 bits for all frames). The last codeword is encoded extending the info bits with N_{P1} zeros; these N_{P1} bits are not transmitted. The last N_{P2} bits are not encoded.

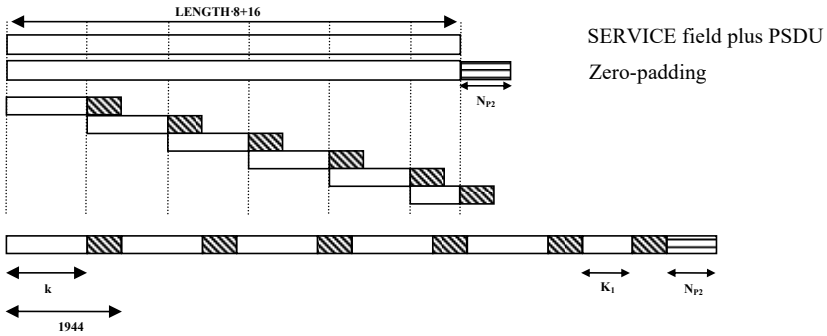

Figure 020 – LDPC PPDU encoding.

20.3.5.7.4 LDPCC Encoder

The proposed LDPCC supports rate-1/2, rate-2/3, rate-3/4 and rate-5/6 encoding. The LDPCC encoder is systematic, i.e. it encodes an information block of size k, $I=(i_0,i_1,\ldots i_{(k-1)})$ into a codeword **c** of size n, $\mathbf{c}=(i_0,i_1,\ldots i_{(k-1)}, p_0, p_1,\ldots, p_{(n-k-1)})$, by adding n-k parity bits obtained so that $\mathbf{H}\cdot\mathbf{c}^T = \mathbf{0}$. The parameters k and n are defined in Table 013 according to the selected encoder rate.

The parity-check matrix for each encoder rate is "structured" (as opposed to "random") in the sense that it can be partitioned into square subblocks (submatrices) of size Z x Z. These submatrices are either cyclic permutations of the diagonal identity matrix, null sub-matrices, or, in a few cases, a staircase matrix ("st") or a subdiagonal matrix ("D"). The submatrix types (except for the null submatrix) are illustrated in Figure 021. At each encoding rate, the structure of parity-check matrix allows a linear-complexity encoder (based on back substitution).

~~A characteristic feature of the considered LDPCCs is that combining rows of the parity-check matrix (**H**) for the lowest rate code produces **H** for higher rates. This is equivalent to replacing a group of check nodes with a single check node that sums all the edges coming into each of the original check nodes. Direct consequences are that all code rates have the same block length and the same variable node degree distribution.~~

~~The LDPCC encoder is systematic, i.e. encodes an information block of size k, $I=(i_0,i_1,\ldots i_{(k-1)})$ into a codeword **C** of size n $\mathbf{C}=(i_0,i_1,\ldots i_{(k-1)}, p_0, p_1,\ldots, p_{(n-k-1)})$ by adding n-k parity bits obtained so that $\mathbf{H}\cdot\mathbf{c}^T = \mathbf{0}$.~~

~~k and n are defined in Table 013 according to the selected rate.~~

~~The parity check matrix used to generate all the code rates is rate 1/2 (i.e. number of rows n-k = 972, number of columns n = 1944). This belongs to the class of the so-called structured parity check matrices (compared to "random" generated codes). More specifically, the matrix can be partitioned into square sub-blocks of size 27x27 which are either cyclic permutations of the diagonal identity matrix or null sub-matrices. A few of them – specifically 2 in the rate 1/2 matrix described in Table A.1 – may contain two (cyclically shifted) diagonals.~~

~~In addition, in order to enable a simple encoding process, the parity-check matrices include a block lower triangular structure at the right-hand side. This allows a linear-complexity encoder (based on back substitution). More precisely, the parity-check matrix is of the type:~~

$$\cancel{H_{(n-k)\times n} = [A_{(n-k)\times k}\ B_{(n-k)\times(n-k)}]} \qquad \cancel{(23)}$$

~~where B is block lower triangular, i.e. has the structure reported in Fig. 021.~~

$$\cancel{B_{(n-k)\times(n-k)}} = \begin{pmatrix} b_{11} & 0 & \cdots & & 0 \\ b_{21} & b_{22} & 0 & & \\ & b_{32} & \ddots & \ddots & \vdots \\ \vdots & & \ddots & \ddots & 0 \\ & & & \ddots & 0 \\ b_{(n-k)1} & & \cdots & & b_{(n-k)(n-k)} \end{pmatrix},$$

~~b_{ij} = circulant permutation matrix; (i,j) sub-matrix indexes.~~

~~**Figure 021 – lower triangular part of the parity check matrix**~~

~~In order to generate variable rate LDPCCs, the following criteria apply:~~

Field Code Changed

~~a) Row-combining of rows who do not have a '1' in the same position (this implies a same resulting variable node degree distribution for all the code rates).~~
~~b) The selection of rows to be summed preserves the lower triangular structure of the right-hand side of the matrix through all the rates.~~

~~Taking into account above-mentioned criteria, the code rates are obtained as follows:~~

~~- Code rate 2/3:~~
~~row *i* (the rows are enumerated from top to bottom) is generated by summing row *i* of **H** of rate 1/2 code and the row with index *i*+*M*/2 where *M* is the total number of check equations in rate 1/2 code, for all the rows where *i* < *M*/3.~~

~~- Code rate 3/4:~~
~~row *i* is generated by summing row *i* of **H** of rate 1/2 code and the row with index *i*+*M*/2 where *M* is the total number of **H** rows (i.e. check equations) in rate 1/2 code.~~

~~- Code rate 5/6:~~
~~Rows are summed three at a time as: row *i* plus the row with index *i*+*M*/3 plus the row with index *I* + 2*M*/3.~~

~~The codes are designed to avoid length 4 cycles and to avoid small stopping sets.~~

20.3.5.7.5 Parity check matrix

Most of the non-null subblocks of the parity-check matrices are cyclic permutation matrices. The cyclic permutation matrix P_i is obtained from the identity matrix by cyclically shifting the rows to the right by ***i*** elements. The matrix P_0 is the identity matrix. Figure 021 illustrates examples (for a subblock size of 8 x 8) of cyclic-permutation matrices P_i, as well as two other submatrix types, the "st"-matrix which has the staircase structure and the "*D*"-matrix which has the subdiagonal structure.

$$P_0=\begin{bmatrix}1&0&0&0&0&0&0&0\\0&1&0&0&0&0&0&0\\0&0&1&0&0&0&0&0\\0&0&0&1&0&0&0&0\\0&0&0&0&1&0&0&0\\0&0&0&0&0&1&0&0\\0&0&0&0&0&0&1&0\\0&0&0&0&0&0&0&1\end{bmatrix},P_1=\begin{bmatrix}0&1&0&0&0&0&0&0\\0&0&1&0&0&0&0&0\\0&0&0&1&0&0&0&0\\0&0&0&0&1&0&0&0\\0&0&0&0&0&1&0&0\\0&0&0&0&0&0&1&0\\0&0&0&0&0&0&0&1\\1&0&0&0&0&0&0&0\end{bmatrix},P_5=\begin{bmatrix}0&0&0&0&0&1&0&0\\0&0&0&0&0&0&1&0\\0&0&0&0&0&0&0&1\\1&0&0&0&0&0&0&0\\0&1&0&0&0&0&0&0\\0&0&1&0&0&0&0&0\\0&0&0&1&0&0&0&0\\0&0&0&0&1&0&0&0\end{bmatrix}$$

$$st=\begin{bmatrix}1&0&0&0&0&0&0&0\\1&1&0&0&0&0&0&0\\0&1&1&0&0&0&0&0\\0&0&1&1&0&0&0&0\\0&0&0&1&1&0&0&0\\0&0&0&0&1&1&0&0\\0&0&0&0&0&1&1&0\\0&0&0&0&0&0&1&1\end{bmatrix},D=st\oplus P_0=\begin{bmatrix}0&0&0&0&0&0&0&0\\1&0&0&0&0&0&0&0\\0&1&0&0&0&0&0&0\\0&0&1&0&0&0&0&0\\0&0&0&1&0&0&0&0\\0&0&0&0&1&0&0&0\\0&0&0&0&0&1&0&0\\0&0&0&0&0&0&1&0\end{bmatrix}$$

Figure 021 – Types of subblock matrices. The matrix P_i is produced by cyclically shifting the rows of the identity matrix to the right by *i* places.

Table A.1 of Annex A displays the "matrix prototype" of the rate-1/2 parity-check matrix. The integer *i* denotes the cyclic-permutation matrix P_i, "st" denotes the staircase matrix and *D* denotes the subdiagonal matrix, as illustrated in Figure 021. Vacant entries of the table denote null (zero) submatrices.

Formatted: Not Superscript/ Subscript

Table A.2 of Annex A displays the matrix prototype of the rate-2/3 parity-check matrix in the same fashion.

Table A.3 of Annex A displays the matrix prototype of the rate-3/4 parity-check matrix in the same fashion.
Table A.4 of Annex A displays the matrix prototype of the rate-5/6 parity-check matrix in the same fashion.

~~In Table A.1 in Annex A the rate 1/2 parity check matrix is reported. All the other rates can be derived by properly combining its rows as explained in 20.3.5.7.4.~~

~~The table describes the "matrix prototype", i.e. a structure of size 36x72 where the basic elements are squared sub-matrices whose size is 27x27. Each sub-matrix is either a null matrix or a cyclic permutation of the identity matrix (or the lower bidiagonal matrix at the right hand bottom of the matrix).~~

~~Figure 022 illustrates some examples (for a 10x10 matrix) of the basic circular permutation matrix S_i., clarifying how cyclic shift indexes *i* are to be interpreted. The last line in Table A.1, indicated as "st", indicates the staircase (or bi-diagonal) structure (S_d in Fig. 021).~~

$$S_0=\begin{bmatrix}1&&&&&&&&&\\&1&&&&&&&&\\&&1&&&&&&&\\&&&1&&&&&&\\&&&&1&&&&&\\&&&&&1&&&&\\&&&&&&1&&&\\&&&&&&&1&&\\&&&&&&&&1&\\&&&&&&&&&1\end{bmatrix}\quad S_3=\begin{bmatrix}&&&1&&&&&&\\&&&&1&&&&&\\&&&&&1&&&&\\&&&&&&1&&&\\&&&&&&&1&&\\&&&&&&&&1&\\&&&&&&&&&1\\1&&&&&&&&&\\&1&&&&&&&&\\&&1&&&&&&&\end{bmatrix}\quad S_7=\begin{bmatrix}&&&&&&&&1&\\&&&&&&&&&1\\1&&&&&&&&&\\&1&&&&&&&&\\&&1&&&&&&&\\&&&1&&&&&&\\&&&&1&&&&&\\&&&&&1&&&&\\&&&&&&1&&&\\&&&&&&&1&&\end{bmatrix}\quad S_d=\begin{bmatrix}1&&&&&&&&&\\1&1&&&&&&&&\\&1&1&&&&&&&\\&&1&1&&&&&&\\&&&1&1&&&&&\\&&&&1&1&&&&\\&&&&&1&1&&&\\&&&&&&1&1&&\\&&&&&&&1&1&\\&&&&&&&&1&1\end{bmatrix}$$

~~**Figure 022 – Structure of the cyclic permutations of the identity matrix. Matrix S_i is produced by cyclically shifting the columns of the identity matrix to the right *i* places.**~~

~~Table A.1 follows the following format: Row number – Column number – Cyclic shift to the right (of columns). Rows are enumerated from top to bottom, columns from left to right.~~

20.3.5.8 Subcarrier modulation mapping

The subcarrier modulation mapping shall follow IEEE 802.11a-1999 clause 17.3.5.7 for each transmit antenna.

20.3.5.9 NTX-SDM (Spatial Data Multiplexing) Modes

The NTX-SDM modes are those modes in which N_{TX}, the number of TX antennas, is equal to N_{SS}, the number of transmitted spatial streams. Throughout the description of the MIMO signaling modes, we shall number the MIMO-OFDM symbols transmitted in a PSDU sequentially, with $n = 1$ denoting the first symbol that follows the PLCP preamble.

20.3.5.9.1 Pilot tones for the NTX-SDM modes

The subcarriers with index -21 and +21 are dedicated in all 20 MHz NTX-SDM modes to transmit pilot signals during each OFDM symbol, in order to increase robustness against frequency offsets and phase noise. In the 40 MHz modes, 4 subcarriers are dedicated to transmitting pilots. These subcarriers have indices -42, -14, +14, and +42.

Formatted: English (United States)

Formatted: Font: 10 pt, Complex Script Font: 10 pt

Formatted: Font: 11 pt, Complex Script Font: 10 pt

Formatted: Adjust space between Latin and Asian text, Adjust space between Asian text and numbers

The relative polarity of the pilots transmitted from various antennas shall be determined using the following relations. We shall use p_n to denote the nth element of the sequence $p_{0\ldots126v}$ specified in equation (25) of IEEE 802.11a-1999 subclause 17.3.5.9. We define the following matrices:

$$A=\begin{bmatrix}+1 & +1 & +1 & -1\\ +1 & -1 & +1 & +1\end{bmatrix},\quad B=\begin{bmatrix}+1 & +1 & -1 & -1\\ +1 & -1 & +1 & -1\\ -1 & +1 & +1 & -1\end{bmatrix},\quad C=\begin{bmatrix}+1 & +1 & +1 & -1\\ +1 & +1 & -1 & +1\\ +1 & -1 & +1 & +1\\ -1 & +1 & +1 & +1\end{bmatrix}. \qquad (24)$$

Furthermore, we define $a_{i,j}$, $b_{i,j}$, and $c_{i,j}$ as the element on the ith row and jth column of the matrices A, B, and C, respectively. For example, i =0, 1, 2; j = 0, 1, 2, 3 for matrix B. Then the pilot values sent from the mth antenna (m = 1, 2, …4) during the nth OFDM symbol in the 20 MHz modes shall be given by the corresponding value in Table 014, multiplied with $p_{n \bmod 127}$. The function f(·) in Table 014 is defined as f(0) = 0, f(1)=2, f(2)=1, f(3)=3.

~~Table 018~~The pilot value in the 40 MHz modes shall be given by the corresponding value in Table 015, multiplied with $p_{n \bmod 127}$.The value of the pilot signals sent from the first antenna during the SIG-N symbol shall be obtained by setting n = 0 in this subclause. The pilot signals sent during the SIG-MM symbol in the mixed-mode preambles shall follow IEEE 802.11a-1999 subclause 17.3.5.9, and the polarity of the sequence $p_{0\ldots126v}$ shall be reset after the SIG-MM symbol is transmitted.

Table 014—Pilot value sent from *m*th antenna during *n*th OFDM symbol in 20 MHz N_{TX}-SDM modes.

Subcarrier index, *k*	2TX-SDM mode	3TX-SDM mode	4TX-SDM mode
-21	$a_{m-1,\, n \bmod 2}$	$b_{m-1,\, f(n \bmod 4)}$	$c_{m-1,\, f(n \bmod 4)}$
+21	$a_{m-1,\, (n+1) \bmod 2}$	$b_{m-1,\, f((n+2) \bmod 4)}$	$c_{m-1,\, f((n+2) \bmod 4)}$

Table 015—Pilot value sent from *m*th antenna during *n*th OFDM symbol in 40 MHz N_{TX}-SDM modes.

Subcarrier index, *k*	1TX-mode	2TX-SDM mode	3TX-SDM mode	4TX-SDM mode
-42	+1	$a_{m-1,\, n \bmod 4}$	$b_{m-1,\, n \bmod 4}$	$c_{m-1,\, n \bmod 4}$
-14	+1	$a_{m-1,\, (n+1) \bmod 4}$	$b_{m-1,\, (n+1) \bmod 4}$	$c_{m-1,\, (n+1) \bmod 4}$
+14	+1	$a_{m-1,\, (n+2) \bmod 4}$	$b_{m-1,\, (n+2) \bmod 4}$	$c_{m-1,\, (n+2) \bmod 4}$
+42	-1	$a_{m-1,\, (n+3) \bmod 4}$	$b_{m-1,\, (n+3) \bmod 4}$	$c_{m-1,\, (n+3) \bmod 4}$

Formatted: Centered

Formatted Table

~~**20.3.5.9 Pilot tones**~~

~~The subcarriers with index -21 and +21 are dedicated in all 20 MHz modes to transmit pilot signals during each OFDM symbol, in order to increase robustness against frequency offsets and phase noise. In the 40 MHz modes, 4 subcarriers are dedicated to transmitting pilots. These subcarriers have indexes -42, -14, +14, and +42.~~

~~The relative polarity of the pilots transmitted from various antennas shall be determined using the following relations. We shall number the MIMO-OFDM symbols transmitted in a PSDU sequentially, with n = 1 denoting the first symbol that follows the PLCP preamble. We shall use p_n to denote the nth element of the sequence $p_{0\ldots126v}$ specified in equation (25) of IEEE 802.11a-1999 subclause 17.3.5.9. We define the following matrices:~~

$$\cancel{A=\begin{bmatrix}+1 & +1 & +1 & -1\\ +1 & -1 & +1 & +1\end{bmatrix}}$$

$$B=\begin{bmatrix} +1 & +1 & -1 & -1 \\ +1 & -1 & +1 & -1 \\ -1 & +1 & +1 & -1 \end{bmatrix}$$

$$C=\begin{bmatrix} +1 & +1 & +1 & -1 \\ +1 & +1 & -1 & +1 \\ +1 & -1 & +1 & +1 \\ -1 & +1 & +1 & +1 \end{bmatrix} \qquad (24)$$

Furthermore, we define $a_{i,j}$, $b_{i,j}$, and $c_{i,j}$ as the element on the ith row and jth column of the matrices A, B, and C, respectively. For example, $i = 0, 1, 2$; $j = 0, 1, 2, 3$ for matrix B. Then the pilot values sent from the mth antenna ($m = 1, 2, \ldots 4$) during the nth OFDM symbol in the 20 MHz modes shall be given by the corresponding value in Table 014, multiplied with $p_{n \bmod 127}$. The function f(.) referred to in Table 014 is defined in Table 016. The pilot value in the 40 MHz modes shall be given by the corresponding value in Table 015, multiplied with $p_{n \bmod 127}$. The value of the pilot signals sent from the first antenna during the SIG-N symbol shall be obtained by setting $n = 0$ in this subclause. The pilot signals sent during the SIG-MM symbol in the mixed mode preambles shall follow IEEE 802.11a-1999 subclause 17.3.5.9, and the polarity of the sequence $p_{0\ldots126v}$ shall be reset after the SIG-MM symbol is transmitted.

Table 014—Pilot value sent from *m*th antenna during *n*th OFDM symbol in 20 MHz modes

Subcarrier index	2TX mode	3TX mode	4TX mode
-21	$a_{m-1,\, n \bmod 2}$	$b_{m-1,\, f(n \bmod 4)}$	$c_{m-1,\, f(n \bmod 4)}$
+21	$a_{m-1,\, (n+1) \bmod 2}$	$b_{m-1,\, f((n+2) \bmod 4)}$	$c_{m-1,\, f((n+2) \bmod 4)}$

Table 015—Pilot value sent from *m*th antenna during *n*th OFDM symbol in 40 MHz modes

Subcarrier index	1TX mode	2TX mode	3TX mode	4TX mode
-42	+1	$a_{m-1,\, n \bmod 4}$	$b_{m-1,\, n \bmod 4}$	$c_{m-1,\, n \bmod 4}$
-14	+1	$a_{m-1,\, (n+1) \bmod 4}$	$b_{m-1,\, (n+1) \bmod 4}$	$c_{m-1,\, (n+1) \bmod 4}$
+14	+1	$a_{m-1,\, (n+2) \bmod 4}$	$b_{m-1,\, (n+2) \bmod 4}$	$c_{m-1,\, (n+2) \bmod 4}$
+42	-1	$a_{m-1,\, (n+3) \bmod 4}$	$b_{m-1,\, (n+3) \bmod 4}$	$c_{m-1,\, (n+3) \bmod 4}$

Table 016—Definition of the function f(.)

l	f(*l*)
0	0
1	2
2	1
3	3

Figure 023 provides an illustration of the relative polarity of pilot signals transmitted in the 2TX, 20 MHz mode of operation

Formatted: English (United States)

Formatted: English (United States)

Formatted: English (United States)

Formatted: English (United States)

Formatted: English (United States)

Formatted: English (United States)

Formatted: English (United States)

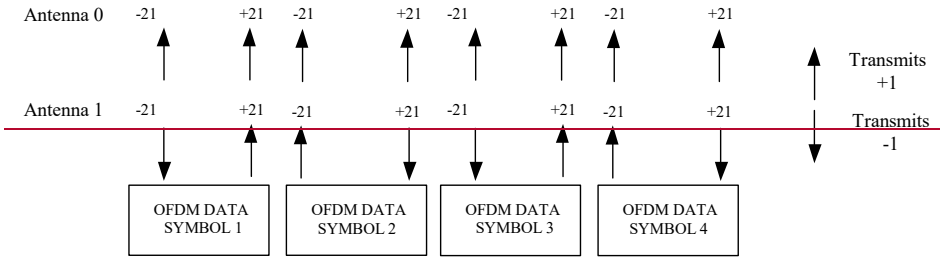

~~**Figure 023 – An illustration of the relative polarity of pilot signals in the 2TX, 20 MHz mode. "-21" and "+21" indicate the subcarrier indexes on which pilot signals are sent**~~

~~**20.3.5.10 Space-time block coding (STBC)**~~

Figure 022 provides an illustration of the relative polarity of pilot signals transmitted in the 20 MHz 2TX-SDM mode of operation.

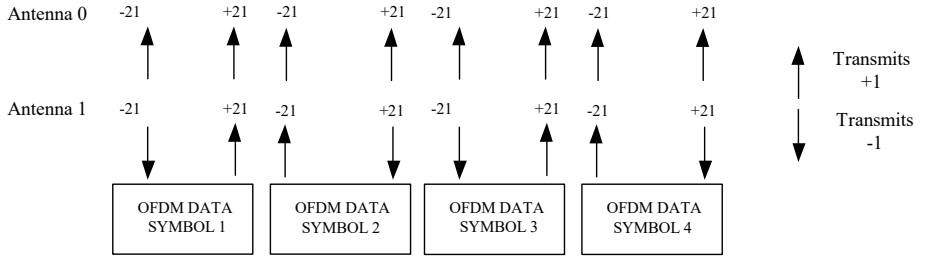

Figure 022 – An illustration of the relative polarity of pilot signals in the 20 MHz 2TX-SDM mode. "-21" and "+21" indicate the subcarrier indices on which pilot signals are sent

20.3.5.9.2 Data tones in NTX-SDM modes

The signaling on the data tones of the NTX-SDM modes is described in subclause 20.3.2.1., item (l).

20.3.5.10 NTX-STBC (Space-Time Block Coding) Modes

This subclause defines a set of robust transmission rates which are applicable when $N_{TX,}$ the number of TX antennas, is greater than $N_{SS,}$ the number of transmitted spatial streams. These rates are based on space time block coding. Implementation of all modes defined in this subclause is optional.

20.3.5.10.1 N_{TX}-STBC modes with single spatial stream N_{SS}=1

20.3.5.10.1.1 Pilot tones in the NTX-STBC modes with N_{SS}=1

The pilot structure of the optional NTX-STBC modes closely follows that of the 2TX-SDM modes. For 20 MHz operation, the subcarriers with indices k=-21,+21 are reserved for piloting. For 40 MHz operation, the subcarriers with indices k=-42,-14,+14,+42 are reserved for piloting.

In the NTX-STBC modes, only two antennas per pilot subcarrier transmit pilots on a given OFDM symbol. For N_{TX}=3 and N_{TX}=4, the active antennas on a given OFDM symbol are determined using the antenna selection functions g and h defined in the following. We define $g(m,n,p)$ via Table 016, and $h(m,n,p)$ via Table 017 below. The notation $[x]$ is used to denote *floor*(x).

Formatted: Font: 10 pt, Complex Script Font: 10 pt, English (United States)
Formatted: Font: 10 pt, Complex Script Font: 10 pt, English (United States)
Formatted: Font: 10 pt, Complex Script Font: 10 pt, English (United States)
Formatted: Font: 10 pt
Formatted: Font: 10 pt
Formatted: Font: 10 pt, Not Superscript/ Subscript
Formatted: Font: 10 pt
Formatted: Font: Italic
Formatted: Font: Italic
Formatted: Font: Italic
Formatted: Font: Italic
Formatted: Font: Italic
Formatted: Font: Italic

Table 016—The *g* function used in antenna selection for 3TX-STBC modes.

M \ $(\lfloor n/2 \rfloor + p) \bmod 3$	0	1	2
1	1	0	1
2	0	1	2
3	2	2	0

Table 017—The *h* function used in antenna selection for 4TX-STBC modes.

m \ $(\lfloor n/2 \rfloor + p) \bmod 4$	0	1	2	3
1	1	0	1	0
2	0	1	0	1
3	2	0	0	2
4	0	2	2	0

The pilot values sent from the mth antenna (m = 1, …,N_{TX}) during the nth OFDM symbol in the 20 MHz-STBC modes shall be given by the corresponding value in Table 018, multiplied with $p_{n \bmod 127}$. The values $a_{i,j}$ with i =-1 in Table 018 are interpreted as zero.

Table 018—Pilot value sent from *m*th antenna during *n*th OFDM symbol in 20 MHz N_{TX}-STBC modes.

Subcarrier index, *k*	2TX-STBC-mode with N_{SS}=1	3TX-STBC-mode with N_{SS}=1	4TX-STBC-mode with N_{SS}=1
-21	$a_{m-1,\, n \bmod 2}$	$(3/2)^{1/2}\, a_{g(m,n,0)-1,\, n \bmod 2}$	$2^{1/2}\, a_{h(m,n,0)-1,\, n \bmod 2}$
+21	$a_{m-1,\, (n+1) \bmod 2}$	$(3/2)^{1/2}\, a_{g(m,n,1)-1,\, (n+1) \bmod 2}$	$2^{1/2}\, a_{h(m,n,1)-1,\, (n+1) \bmod 2}$

The pilot values sent from the mth antenna (m = 1, …,N_{TX}) during the nth OFDM symbol in the 40 MHz-STBC modes shall be given by the corresponding value in Table 019, multiplied with $p_{n \bmod 127}$. The values $a_{i,j}$ with i =-1 in Table 019 are interpreted as zero.

Table 019—Pilot value sent from *m*th antenna during *n*th OFDM symbol in 40 MHz N_{TX}-STBC modes.

Subcarrier index, *k*	2TX-STBC-mode with N_{SS}=1	3TX-STBC-mode with N_{SS}=1	4TX-STBC-mode With N_{SS}=1
-42	$a_{m-1,\, n \bmod 4}$	$(3/2)^{1/2}\, a_{g(m,n,0)-1,\, n \bmod 4}$	$2^{1/2}\, a_{h(m,n,0)-1,\, n \bmod 4}$
-14	$a_{m-1,\, (n+1) \bmod 4}$	$(3/2)^{1/2}\, a_{g(m,n,1)-1,\, n \bmod 4}$	$2^{1/2}\, a_{h(m,n,1)-1,\, (n+1) \bmod 4}$
+14	$a_{m-1,\, (n+2) \bmod 4}$	$(3/2)^{1/2}\, a_{g(m,n,2)-1,\, n \bmod 4}$	$2^{1/2}\, a_{h(m,n,2)-1,\, (n+2) \bmod 4}$
+42	$a_{m-1,\, (n+3) \bmod 4}$	$(3/2)^{1/2}\, a_{g(m,n,3)-1,\, n \bmod 4}$	$2^{1/2}\, a_{h(m,n,3)-1,\, (n+3) \bmod 4}$

20.3.5.10.1.2 Data tones in the N_{TX}-STBC modes with N_{SS}=1

The 2TX-STBC scheme for N_{SS} =1 in 20 MHz and 40 MHz is defined as follows. The bits output from the interleaver of the (single) spatial stream are mapped to the subcarriers of the first antenna, according to subclause 20.3.5.8. We denote the pair of complex numbers transmitted on subcarrier k from this antenna during the nth and (n+1)st OFDM symbols as $x_{k,n}$ and $x_{k,n+1}$ respectively, where n is odd (subclause 20.3.5.9 noted that the first OFDM symbol following the PLCP preamble is labelled n=1). Then, the corresponding transmission from the second antenna, on the same subcarrier and during the same OFDM symbols, shall be $-x^*_{k,n+1}$ and $x^*_{k,n}$ where * denotes complex conjugation. This encoding scheme shall hereafter be referred to as the "basic STBC encoding rule". The basic STBC encoding rule is represented as

$$M(x_1, x_2) = \begin{bmatrix} x_1 & x_2 \\ -x_2^* & x_1^* \end{bmatrix} \qquad (27)$$

where x_1 and x_2 are complex quantities.

Formatted: Font: Italic
Formatted: Font: Not Italic
Formatted: Font: 9 pt, Not Italic, Complex Script Font: 9 pt
Formatted: Font: 9 pt, Complex Script Font: 9 pt
Formatted: Font: 9 pt, Complex Script Font: 9 pt
Formatted: Font: 9 pt, Not Italic, Complex Script Font: 9 pt
Formatted: Font: 9 pt, Complex Script Font: 9 pt
Formatted Table
Formatted: Font: 9 pt, Complex Script Font: 9 pt
Formatted: table title, Adjust space between Latin and Asian text, Adjust space between Asian text and numbers
Formatted: table title, Indent: Before: 0.5", First line: 0.5", Adjust space between Latin and Asian text, Adjust space between Asian text and numbers
Formatted: Font: 9 pt, Complex Script Font: 9 pt
Formatted: Font: 9 pt, Complex Script Font: 9 pt
Formatted: Font: 9 pt, Not Italic, Complex Script Font: 9 pt
Formatted: Font: 9 pt, Complex Script Font: 9 pt
Formatted Table
Formatted Table
Formatted: Font: 9 pt, Complex Script Font: 9 pt
Formatted: Font: Not Italic
Formatted: Font: Not Italic, Superscript
Formatted: Font: 9 pt, Complex Script Font: 9 pt
Formatted: Subscript
Formatted: Font: Not Italic, Subscript
Formatted: Font: Not Italic
Formatted Table
Formatted: Font: 10 pt
Formatted: Font: 10 pt, Not Superscript/ Subscript
Formatted: Font: 10 pt
Formatted: Font: Italic
Formatted: Font: Not Italic
Formatted: Font: Not Italic
Formatted: Font: Italic

~~Table 019~~Table 020—Rate-dependent parameters for 20 MHz, NTX-STBC modes with N_{SS} = 1

Data rate (Mbits/s)	Modulation	Code rate (R)	Coded bits per subcarrier per antenna (N_{BPSC})	Number of data sub-carriers (N_{SD})	Number of pilots (N_{SP})	Coded bits per MIMO-OFDM symbol (N_{CBPS})	Data bits per MIMO-OFDM symbol (N_{DBPS})	Clause 10.4.4.2 rate code
6 .75	BPSK	1/2	1	54	2	54	27	114
10.125	BPSK	3/4	1	54	2	54	40.5	115
13.5	QPSK	1/2	2	54	2	108	54	116
20.25	QPSK	3/4	2	54	2	108	81	117
27	16-QAM	1/2	4	54	2	216	108	118
40.5	16-QAM	3/4	4	54	2	216	162	119
54	64-QAM	2/3	6	54	2	324	216	120
60.75	64-QAM	3/4	6	54	2	324	243	121
67.5	64-QAM	5/6	6	54	2	324	270	122

Since encoding takes place across pairs of MIMO-OFDM symbols in this subclause, the number of pad bits inserted in subclause 20.3.5.3 shall be sufficient to ensure that an even number of MIMO-OFDM symbols are transmitted in the PPDU.

The RATE-dependent parameters for 20 MHz, N_{TX} = 2, N_{SS} = 1 are defined in Table 020. The RATE-dependent parameters for 40 MHz, N_{TX} = 2, N_{SS} = 1 are defined in Table 006.

For N_{TX} = 3, N_{SS} = 1 modes, and for N_{TX} = 4, N_{SS} = 1 modes, each data subcarrier transmits on two consecutive OFDM symbol pairs using the basic STBC encoding rule on two of the transmit antennas. The selection of the two active antennas on each data subcarrier is achieved through a circulation pattern given by

$$cir(k_d)=((k_d \bmod 9) + \mathrm{floor}(k_d/9)) \bmod N_{TX}, \qquad (28)$$

where k_d is the "data tone index". For subcarrier indices k, Table 021~~Table 021~~ lists the corresponding data tone indices for 20 MHz modes. For subcarrier indices k, Table 022 lists the corresponding data tone indices for 40 MHz modes.

Table 021~~Table 021~~- Data tone indices as a function of subcarrier indices in 20 MHz modes.

Subcarrier index, k	Data tone index, k_d
$-28 \le k \le -22$	k+28
$-20 \le k \le -1$	k+27
$1 \le k \le 20$	k+26
$22 \le k \le 28$	k+25

Table 022— Data tone indices as a function of subcarrier indices in 40 MHz modes.

Subcarrier index, k	Data tone index, k_d
$-58 \le k \le -43$	k+58
$-41 \le k \le -15$	k+57
$-13 \le k \le -3$	k+56
$3 \le k \le 13$	k+51
$15 < k < 41$	k+50
$43 \le k \le 58$	k+49

Formatted: Font: Arial

Formatted: Swedish (Sweden)

Formatted: Swedish (Sweden)

Table 023 displays the transmitted signals over two consecutive OFDM symbols in the NTX-STBC modes with N_{SS}=1, using the basic STBC encoding rule summarized in (27). For each data subcarrier k, the selection of the two antennas for the basic STBC encoding rule for 3TX and 4TX is achieved via the binary matrices $S_3(\mathrm{cir}(k_d))$ and $S_4(\mathrm{cir}(k_d))$, defined below, where k_d is the data tone index corresponding to data subcarrier index k (Table 021 ~~Table 021~~and Table 022).

Table 023— NTX-STBC-mode encoding rules for N_{TX}=2, 3, 4 and N_{SS}=1

N_{TX}	Signal over OFDM symbol pair (n, n+1), n odd
2	$M(s_{k,n}, s_{k,n+1})$
3	$(3/2)^{1/2}\, S_3(\mathrm{cir}(k_d))\, M(s_{k,n}, s_{k,n+1})$
4	$2^{1/2}\, S_4(\mathrm{cir}(k_d))\, M(s_{k,n}, s_{k,n+1})$

Depending on the value of the data tone index k_d, the matrix $S_3(\mathrm{cir}(k_d))$ assumes one of the three values shown in Figure 024. The values $S_3(0)$, $S_3(1)$, $S_3(2)$ indicate that the basic STBC encoding rule shall be applied to antenna pairs (1,3), (2,3) or (1,2), respectively. Similarly, depending on the values of k_d, the matrix $S_4(\mathrm{cir}(k_d))$ takes on one of the four values shown in Figure 025. The values $S_4(0)$, $S_4(1)$, $S_4(2)$, $S4(2)$ indicate that the basic STBC encoding rule shall be applied to antenna pairs (1,3), (2,4) ,(1,4) or (2,3) respectively.

$$S_3(0) = \begin{bmatrix} 1 & 0 \\ 0 & 0 \\ 0 & 1 \end{bmatrix}, \quad S_3(1) = \begin{bmatrix} 0 & 0 \\ 1 & 0 \\ 0 & 1 \end{bmatrix}, \quad S_3(2) = \begin{bmatrix} 1 & 0 \\ 0 & 1 \\ 0 & 0 \end{bmatrix}$$

Figure 024 – Antenna selection via S_3.

$$S_4(0) = \begin{bmatrix} 1 & 0 \\ 0 & 0 \\ 0 & 1 \\ 0 & 0 \end{bmatrix}, \quad S_4(1) = \begin{bmatrix} 0 & 0 \\ 1 & 0 \\ 0 & 0 \\ 0 & 1 \end{bmatrix}, \quad S_4(2) = \begin{bmatrix} 1 & 0 \\ 0 & 0 \\ 0 & 0 \\ 0 & 1 \end{bmatrix}, \quad S_4(3) = \begin{bmatrix} 0 & 0 \\ 1 & 0 \\ 0 & 1 \\ 0 & 0 \end{bmatrix}$$

Figure 025 – Antenna selection via S_4.

The RATE-dependent parameters for 20 MHz, N_{TX} = 3, N_{SS} = 1 are the same as those for the 20MHz, N_{TX} = 2, N_{SS} = 1, given by Table 022.
The RATE-dependent parameters for 20 MHz, N_{TX} = 4, N_{SS} = 1 are the same as those for the 20MHz, N_{TX} = 2, N_{SS} = 1, given by Table 022.
The RATE-dependent parameters for 40 MHz, N_{TX} = 2, N_{SS} = 1 are defined in Table 006.
The RATE-dependent parameters for 40 MHz, N_{TX} = 3, N_{SS} = 1 are the same as those for the 40MHz, N_{TX} = 2, N_{SS} = 1,given by Table 006.
The RATE-dependent parameters for 40 MHz, N_{TX} = 4, N_{SS} = 1 are the same as those for the 40MHz, N_{TX} = 2, N_{SS} = 1,given by Table 006.

20.3.5.10.2 NTX-STBC modes with more than one single spatial stream (N_{SS}≥ 2)

20.3.5.10.2.1 Pilot tones in NTX-STBC modes with N_{SS}≥ 2

The pilot tones and their structure in NTX-STBC modes with N_{SS}≥ 2 follow those of the NTX-SDM modes described in subclause 20.3.5.9.1

Formatted: Subscript
Formatted: English (United Kingdom)
Formatted: Portuguese (Brazil)
Formatted: Portuguese (Brazil)
Formatted: Portuguese (Brazil)
Formatted: Left
Formatted: Font: 9 pt, Complex Script Font: 9 pt

20.3.5.10.2.2 Data tones in NTX-STBC modes with $N_{SS} \geq 2$

The RATE-dependent parameters for 20 MHz, $N_{TX} = 3$, $N_{SS} = 2$ are defined in Table 003. In this configuration, the basic STBC encoding rule shall be applied on the first and second antennas using bits from the first spatial stream. Bits from the second spatial stream shall be mapped to subcarriers of the third transmit antenna, according to subclause 20.3.5.8.

The RATE-dependent parameters for 20 MHz, $N_{TX} = 4$, $N_{SS} = 2$ are defined in Table 003. In this configuration, the basic STBC encoding rule shall be applied on the first and second antennas using bits from the first spatial stream, and on the third and fourth antennas using bits from the second spatial stream.

The RATE-dependent parameters for 20 MHz, $N_{TX} = 4$, $N_{SS} = 3$ are defined in Table 004. In this configuration, the basic STBC encoding rule shall be applied on the first and second antennas using bits from the first spatial stream. Bits from the second spatial stream shall be mapped to subcarriers of the third transmit antenna, according to subclause 20.3.5.8. Bits from the third spatial stream shall be mapped to subcarriers of the fourth transmit antenna, according to subclause 20.3.5.8.

The RATE-dependent parameters for 40 MHz, $N_{TX} = 2$, $N_{SS} = 1$ are defined in Table 006. In this configuration, the STBC encoding rule shall be applied on the first and second antennas.

The RATE-dependent parameters for 40 MHz, $N_{TX} = 3$, $N_{SS} = 2$ are defined in Table 007. In this configuration, the basic STBC encoding rule shall be applied on the first and second antennas using bits from the first spatial stream. Bits from the second spatial stream shall be mapped to subcarriers of the third transmit antenna, according to subclause 20.3.5.8.

The RATE-dependent parameters for 40 MHz, $N_{TX} = 4$, $N_{SS} = 2$ are defined in Table 007. In this configuration, the basic STBC encoding rule shall be applied on the first and second antennas using bits from the first spatial stream, and on the third and fourth antennas using bits from the second spatial stream.

The RATE-dependent parameters for 40 MHz, $N_{TX} = 4$, $N_{SS} = 3$ are defined in Table 008. In this configuration, the basic STBC encoding rule shall be applied on the first and second antennas using bits from the first spatial stream. Bits from the second spatial stream shall be mapped to subcarriers of the third transmit antenna, according to subclause 20.3.5.8. Bits from the third spatial stream shall be mapped to subcarriers of the fourth transmit antenna, according to subclause 20.3.5.8.

~~The space time block encoding scheme for $N_{TX} = 2$, $N_{SS} = 1$ in 20 MHz and 40 MHz is defined as follows. The bits output from the interleaver of the (single) spatial stream are mapped to the subcarriers of the first antenna, according to subclause 20.3.5.8. We denote the pair of complex numbers transmitted on subcarrier *k* from this antenna during the *j-1*th and *j*th OFDM symbol as s_{j-1} and s_j respectively. Then the corresponding transmission from the second antenna, on the same subcarrier index and during the same OFDM symbols, shall be $-s^*_j$ and s^*_{j-1} where * denotes complex conjugate. This encoding scheme shall hereafter be referred to as the "STBC encoding rule".~~

~~Since encoding takes place across pairs of MIMO-OFDM symbols in this subclause, the number of pad bits inserted in subclause 20.3.5.3 shall be sufficient to ensure that an even number of MIMO-OFDM symbols are transmitted in the PPDU.~~

~~**Table 017—Rate-dependent parameters for 20 MHz, $N_{TX} = 2$, $N_{SS} = 1$**~~

~~Data rate (Mbits/s)~~	~~Modulation~~	~~Code rate (R)~~	~~Coded bits per subcarrier per~~	~~Number of data subcarriers (N_{SD})~~	~~Number of pilots (N_{SP})~~	~~Coded bits per MIMO-OFDM~~	~~Data bits per MIMO-OFDM~~	~~Clause 10.4.4.2 rate code~~

Formatted: English (United Kingdom)

Formatted: English (United States)

Formatted: English (United States)

			~~antenna (N_{BPSC})~~			~~symbol (N_{CBPS})~~	~~symbol (N_{DBPS})~~	
~~6 .75~~	~~BPSK~~	~~1/2~~	~~1~~	~~54~~	~~2~~	~~54~~	~~27~~	~~114~~
~~10.125~~	~~BPSK~~	~~3/4~~	~~1~~	~~54~~	~~2~~	~~54~~	~~40.5~~	~~115~~
~~13.5~~	~~QPSK~~	~~1/2~~	~~2~~	~~54~~	~~2~~	~~108~~	~~54~~	~~116~~
~~20.25~~	~~QPSK~~	~~3/4~~	~~2~~	~~54~~	~~2~~	~~108~~	~~81~~	~~117~~
~~27~~	~~16-QAM~~	~~1/2~~	~~4~~	~~54~~	~~2~~	~~216~~	~~108~~	~~118~~
~~40.5~~	~~16-QAM~~	~~3/4~~	~~4~~	~~54~~	~~2~~	~~216~~	~~162~~	~~119~~
~~54~~	~~64-QAM~~	~~2/3~~	~~6~~	~~54~~	~~2~~	~~324~~	~~216~~	~~120~~
~~60.75~~	~~64-QAM~~	~~3/4~~	~~6~~	~~54~~	~~2~~	~~324~~	~~243~~	~~121~~
~~67.5~~	~~64-QAM~~	~~5/6~~	~~6~~	~~54~~	~~2~~	~~324~~	~~270~~	~~122~~

~~The RATE-dependent parameters for 20 MHz, N_{TX} = 3, N_{SS} = 2 are defined in Table 003. In this configuration, the STBC encoding rule shall be applied on the first and second antennas using bits from the first spatial stream. Bits from the second spatial stream shall be mapped to subcarriers of the third transmit antenna, according to subclause 20.3.5.8.~~

~~The RATE-dependent parameters for 20 MHz, N_{TX} = 4, N_{SS} = 2 are defined in Table 003. In this configuration, the STBC encoding rule shall be applied on the first and second antennas using bits from the first spatial stream, and on the third and fourth antennas using bits from the second spatial stream.~~

~~The RATE-dependent parameters for 20 MHz, N_{TX} = 4, N_{SS} = 3 are defined in Table 004. In this configuration, the STBC encoding rule shall be applied on the first and second antennas using bits from the first spatial stream. Bits from the second spatial stream shall be mapped to subcarriers of the third transmit antenna, according to subclause 20.3.5.8. Bits from the third spatial stream shall be mapped to subcarriers of the fourth transmit antenna, according to subclause 20.3.5.8.~~

~~The RATE-dependent parameters for 40 MHz, N_{TX} = 2, N_{SS} = 1 are defined in Table 006. In this configuration, the STBC encoding rule shall be applied on the first and second antennas.~~

~~The RATE-dependent parameters for 40 MHz, N_{TX} = 3, N_{SS} = 2 are defined in Table 007. In this configuration, the STBC encoding rule shall be applied on the first and second antennas using bits from the first spatial stream. Bits from the second spatial stream shall be mapped to subcarriers of the third transmit antenna, according to subclause 20.3.5.8.~~

~~The RATE-dependent parameters for 40 MHz, N_{TX} = 4, N_{SS} = 2 are defined in Table 007. In this configuration, the STBC encoding rule shall be applied on the first and second antennas using bits from the first spatial stream, and on the third and fourth antennas using bits from the second spatial stream.~~

~~The RATE-dependent parameters for 40 MHz, N_{TX} = 4, N_{SS} = 3 are defined in Table 008. In this configuration, the STBC encoding rule shall be applied on the first and second antennas using bits from the first spatial stream. Bits from the second spatial stream shall be mapped to subcarriers of the third transmit antenna, according to subclause 20.3.5.8. Bits from the third spatial stream shall be mapped to subcarriers of the fourth transmit antenna, according to subclause 20.3.5.8.~~

20.3.6 Clear channel assessment

PLCP shall provide the capability to perform CCA and report the result to the MAC. The CCA mechanism shall detect a “medium busy” condition with a performance specified in 20.3.10.5. This medium status report is indicated by the primitive PHY_CCA.indicate.

20.3.7 PLCP data modulation and modulation rate change

The PLCP preamble shall be transmitted using a set of OFDM-modulated fixed waveforms, specified in subclause 20.3.3 for each transmit antenna for each mode of operation defined in the MIMO-OFDM PHY. The SIG-N field, composed of 54 bits, shall indicate the bandwidth, modulation, code rate, code type, number of TX antennas, and number of spatial streams that shall be used to transmit the MPDU. The transmitter (receiver) shall initiate the modulation constellation, code rate, code type, and other configuration parameters according to the CONFIG indicated in the SIG-N field. The MPDU transmission rate shall be set by the DATARATE parameter in the TXVECTOR, issued with the PHY-TXSTART.request primitive described in 20.2.

20.3.8 PMD operating specifications

Subclauses 20.3.8.1 through 20.3.8.8 provide general specifications for the various modes and options defined in the MIMO-OFDM PMD sublayer. These specifications apply to both the receive and transmit functions and general operation of the MIMO-OFDM PHY.

20.3.8.1 TX Block diagram

The general block diagram of the transmitter for the MIMO-OFDM PHY is shown in Figure 024. The blocks that are shaded in the figure may be replicated N_{TX} times in a MIMO-OFDM system with N_{TX} transmit antennas.

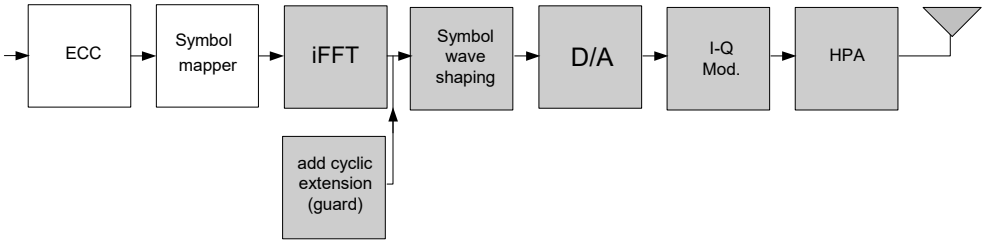

Figure 024 – Transmitter block diagram for the MIMO-OFDM PHY

20.3.8.2 Regulatory requirements

All systems shall comply with the local regulatory requirements for operation in the band in which they are implemented. For 2.4 GHz operation, refer to FCC 15.247, 15.249, 15.205, and 15.209 for the USA; ETS 300-328 for Europe; and MPHPT article 49-20 for Japan. For 5 GHz operation in the USA, refer to FCC CFR47, Part 15, sections 15.205 and 15.209; and Subpart E, sections 15.401-15.407.

The documents listed here are provided for information only, and are subject to change or revision at any time.

20.3.8.3 Operating channel frequencies

The range of operating frequencies for the MIMO-OFDM PHY shall be 2400-2497 MHz and 4920-5805 MHz. The channel numbering shall be as defined in IEEE 802.11b-1999 clause 18.4.6.2, and clause 17.3.8.3.2 of IEEE P802.11j/D1.5, May 2004. The relationship between center frequency and channel number is given by the following equations:

Channel center frequency = 5000 + (channel number) × 5 (MHz) for center frequency > 5000 MHz (25)

Channel center frequency = 4000 + (channel number) × 5 (MHz) for 4900 ≤ center frequency ≤ 5000 MHz (26)

40 MHz operation shall be restricted to the 5 GHz band only. Each 40 MHz channel shall occupy two 20 MHz channels, with the center frequency of the 40 MHz transmission selected to be midway between the center frequencies of the two occupied 20 MHz channels. For example, if the two occupied 20 MHz channels are centered at channel number 149 and 153, then the 40 MHz transmission shall be centered at channel number 151.

20.3.8.4 Spurious emissions

The spurious emissions shall conform to IEEE 802.11a-1999 subclause 17.3.8.4

20.3.8.5 TX RF delay

The TX RF delay shall follow IEEE 802.11a-1999 subclause 17.3.8.5.

20.3.8.6 Slot time

The slot time shall follow IEEE 802.11a-1999 subclause 17.3.8.6 for 5 GHz bands and IEEE 802.11g-1999 subclause 19.4.4 for 2.4 GHz bands.

20.3.8.7 Transmit and receive antenna port impedance

The transmit and receive antenna port impedance for each transmit and receive antenna shall follow IEEE 802.11a-1999 subclause 17.3.8.7.

20.3.8.8 Transmit and receive operating temperature range

The transmit and receive temperature range shall follow IEEE 802.11a-1999 subclause 17.3.8.8.

20.3.9 PMD TX specifications

Subclauses 20.3.9.1 through 20.3.9.7 describe the transmit specifications associated with the PMD sublayer. In general, these are specified by primitives from the PLCP, and the transmit PMD entity provides the actual means by which the signals required by the PLCP primitives are imposed into the medium.

20.3.9.1 TX power levels

The maximum allowable output power shall conform to national regulatory constraints on the maximum radiated power allowed in any frequency band.

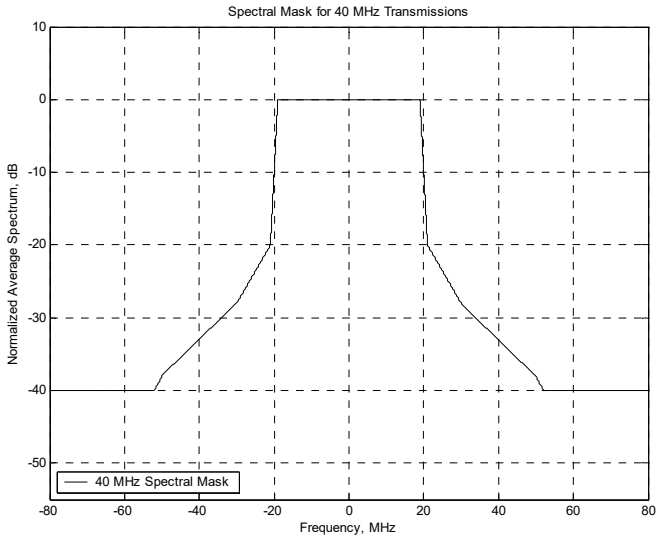

Figure 025 –Transmit spectrum mask for 40 MHz transmissions

20.3.9.2 TX spectrum mask

The transmitted spectral density of the transmitted signal shall conform to subclause IEEE 802.11a-1999 17.3.9.2 for all 20 MHz transmissions. The transmitted spectrum for 40 MHz transmissions shall have a 0 dBr bandwidth not exceeding 38 MHz, -20 dBr at 21 MHz frequency offset, -28 dBr at 30 MHz frequency offset, -38 dBr at 50 MHz frequency offset, and -40 dBr at 52 MHz frequency offset and above. The transmitted spectral density of the 40 MHz transmitted signal shall fall within the spectral mask shown in Figure 025. The measurements shall be made using a 100 kHz resolution bandwidth and a 30 kHz video bandwidth.

20.3.9.3 TX spurious

Spurious transmissions from Clause 20 compliant devices shall conform to national regulations.

20.3.9.4 TX center frequency tolerance

The transmitted center frequency tolerance shall be ±20 ppm maximum for 5 GHz bands and ±25 ppm for 2.4 GHz bands. The transmit center frequency and the symbol clock frequency for all transmit antennas shall be derived from the same reference oscillator.

.

20.3.9.5 TX symbol clock frequency tolerance

The symbol clock frequency tolerance shall be ±20 ppm maximum for 5 GHz bands and ±25 ppm for 2.4 GHz bands. The transmit center frequency and the symbol clock frequency for all transmit antennas shall be derived from the same reference oscillator.

20.3.9.6 Modulation accuracy

Transmit modulation accuracy specifications are described in this subclause. The test method is described in 20.3.9.7.

20.3.9.6.1 TX center frequency leakage

TX center frequency leakage shall follow IEEE 802.11a-1999 subclause 17.3.9.6.1 for all 20 MHz modes of transmission. For 40 MHz modes, the center frequency leakage shall not exceed -18 dB relative to overall transmitted power, or,equivalently, +2 dB relative to the average energy of the rest of the subcarriers.

20.3.9.6.2 TX spectral flatness

For 20 MHz transmissions, the average energy of the constellation in each of the spectral lines -16…-1 and +1…+16 will deviate no more than ±2 dB of their average energy. The average energy of the constellations in each of the spectral lines -28…-17 and +17…+28 will deviate no more than +2/-4 dB from the average energy of the spectral lines -16…-1 and +1…+16.

For 40 MHz transmissions, the average energy of the constellation in each of the spectral lines -32…-3 and +3…+32 will deviate no more than ±2 dB of their average energy. The average energy of the constellations in each of the spectral lines -58…-33 and +33…+58 will deviate no more than +2/-4 dB from the average energy of the spectral lines -32…-3 and +3…+32.

20.3.9.6.3 TX constellation error

The relative constellation RMS error, averaged over subcarriers, transmit spatial streams, OFDM frames, and packets, shall not exceed a constellation and code rate dependent value according to Table 020 for the all modes in which the number of spatial streams is equal to the number of transmit antennas.

Table 020—Allowed relative constellation error versus constellation type and code rate

Constellation size	Code Rate	Relative constellation error (dB)
16-QAM	1/2	-17
16-QAM	3/4	-20
64-QAM	2/3	-24
64-QAM	3/4	-26
64-QAM	5/6	-27

20.3.9.7 TX modulation accuracy (EVM) test

The transmit modulation accuracy test shall be performed by instrumentation capable of converting the transmitted signals into a stream of complex samples at 20 Msamples/s or more for 20 MHz modes, and 40 Msamples/s or more for 40 MHz modes, with sufficient accuracy in terms of I/Q arm amplitude and phase balance, DC offsets, phase noise, etc. A possible embodiment of such a setup is converting the signals to a low IF frequency with a microwave synthesizer, sampling the signals with a digital oscilloscope, and decomposing them digitally into quadrature components.

The test procedure for this requirement is as follows: Matrices H_{1TX}, H_{2TX}, H_{3TX}, and H_{4TX} are defined to give the connections from the transmit antennas to the receive antennas for the 1TX, 2TX, 3TX, and 4TX cases respectively. They are specified as follows:

$$H_{1TX} = \alpha \cdot 1$$

$$H_{2TX} = \alpha \begin{bmatrix} 1 & 1 \\ 1 & -1 \end{bmatrix}$$

$$H_{3TX} = \alpha \begin{bmatrix} -1 & 2 & 2 \\ 2 & -1 & 2 \\ 2 & 2 & -1 \end{bmatrix}$$

$$H_{4TX} = \alpha \begin{bmatrix} -1 & 1 & 1 & 1 \\ 1 & -1 & 1 & 1 \\ 1 & 1 & -1 & 1 \\ 1 & 1 & 1 & -1 \end{bmatrix} \quad (27)$$

The elements of the above matrices h_{ij} specify the connection from the jth transmitter to the ith receiver, where h_{ij} is the element of the ith row and j^{th} column where $i = 1,\ldots, N_{RX}$ and $j = 1,\ldots, N_{TX}$. The attenuation α is chosen to ensure an appropriate received signal power at the test equipment. Figure 026 shows an example test setup for a 2TX mode.

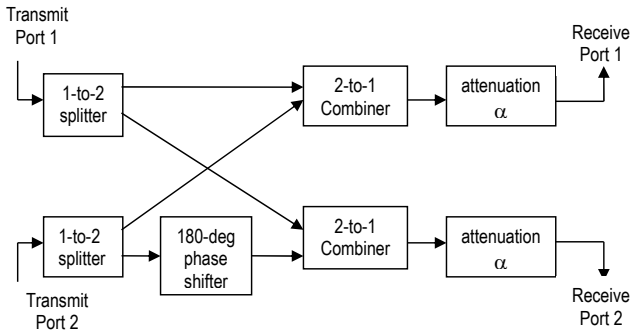

Figure 026 –EVM test setup

The 180 degree phase shifter shall be 180 +/- 10 degrees. The relative amplitudes of the connections h_{ij} shall be within +/-1 dB of the relative values specified in the H matrices above.

The sampled signals shall be processed in a manner similar to an actual receiver, according to the following steps, or an equivalent procedure:

a) Start of frame shall be detected.
b) Transition from short sequences to channel estimation sequences shall be detected, and fine timing (with one sample resolution) shall be established.
c) Coarse and fine frequency offsets shall be estimated.
d) The packet shall be derotated according to estimated frequency offset.
e) The complex channel response coefficients shall be estimated for each of the subcarriers.
f) For each of the data OFDM symbols: transform the symbol into subcarrier received values, estimate the phase from the pilot subcarriers, derotate the subcarrier values according to estimated phase, and apply an

MMSE channel equalizer to each vector of received subcarrier values based on complex estimated channel response coefficients found in (e).

g) For each data-carrying subcarrier of each transmitted stream, find the closest constellation point and compute the Euclidean distance from it.

h) Compute the RMS average of all errors in a packet. It is given by:

$$Error_{RMS} = \frac{\sum_{i=1}^{N_f} \sqrt{\frac{\sum_{l=1}^{N_{SS}} \sum_{j=1}^{L_P} \sum_{k=1}^{N_{ST}} \{(I(i,j,k,l) - I_0(i,j,k,l))^2 + (Q(i,j,k,l) - Q_0(i,j,k,l))^2\}}{N_{ST} L_P P_0 N_{SS}}}}{N_f} \quad (28)$$

where

L_P is the length of the packet;

N_{SS} is the number of spatial streams;

N_f is the number of frames for the measurement;

N_{ST} is the total number of subcarriers (data and pilots) per OFDM symbol;

($I_0(i,j,k,l)$, $Q_0(i,j,k,l)$) denotes the ideal symbol point of the ith frame, j^{th} OFDM symbol of the frame, k^{th} subcarrier, and l^{th} spatial stream of the OFDM symbol in the complex plane;

($I(i,j,k,l)$, $Q(i,j,k,l)$) denotes the observed point of the ith frame, j^{th} OFDM symbol of the frame, k^{th} subcarrier, and l^{th} spatial stream of the OFDM symbol in the complex plane;

P_0 is the average power of the constellation.

The vector error on a phase plane is shown in Figure 121 in IEEE 802.11a-1999 subclause 17.3.9.7.

The test shall be performed over at least 20 frames (N_f), and the RMS average shall be taken. The packets under test shall be at least 16 OFDM symbols long. Random data shall be used for the symbols.

20.3.10 PMD RX specifications

Subclauses 20.3.10.1 through 20.3.10.5 describe the receive specifications associated with the PMD sublayer.

20.3.10.1 RX minimum input level sensitivity

The packet error rate (PER) shall be less than 10% at a PSDU length of 1000 bytes for rate-dependent input levels shall be the numbers listed in Table 021 or less. The minimum input levels are measured at the antenna connectors and are referenced as the average power per receive antenna.

Table 021—Receiver minimum input level sensitivity

Constellation size	Code Rate	Minimum sensitivity (dBm)
BPSK	½	-82
BPSK	¾	-81
QPSK	½	-79
QPSK	¾	-77
16-QAM	½	-74
16-QAM	¾	-70

64-QAM	2/3	-66
64-QAM	¾	-65
64-QAM	5/6	-64

20.3.10.2 RX maximum input level

The RX maximum input level shall be defined as the maximum at any or all antennas, and shall follow IEEE 802.11a-1999 subclause 17.3.10.4 for the 4920-5805 MHz band, and follow IEEE 802.11g-2003 subclause 19.5.3 for the 2400-2497 MHz band.

20.3.10.3 CCA sensitivity

The CCA sensitivity of all Clause 20 compliant devices shall conform to IEEE 802.11a-2003 subclause 17.3.10.5. When operating in 40 MHz mode, the receiver shall also provide a secondary channel carrier sense. The start of a valid OFDM transmission at a receive level equal to or greater than the minimum 6 Mbit/s sensitivity (-82 dBm) shall cause the secondary channel CCA to indicate busy with a probability of >90% within 4us. The receiver shall hold the secondary channel CCA busy for any signal 20 dB above the minimum 6 Mbit/s sensitivity (-62 dBm).

20.3.11 PLCP TX procedure

The transmit PLCP is shown in Figure 029. In order to transmit data, PHY-TXSTART.request shall be enabled so that the PHY entity shall be in the transmit state. Further, the PHY shall be set to operate at the appropriate frequency through station management via the PLME. Other transmit parameters, such as DATARATE, TRANSMISSION_MODE, NUM_STREAMS, and TXPWR_LEVEL, are set via the PHY-SAP with the PHY-TXSTART.request(TXVECTOR), as described in 20.2.

A clear channel shall be indicated by PHY-CCA.indicate(IDLE). The MAC considers this indication before issuing the PHY-TXSTART.request. Transmission of the PPDU or A-PPDU shall be initiated after receiving the PHYTXSTART. request(TXVECTOR) primitive. The TXVECTOR elements for the PHY-TXSTART.request are the PLCP header parameters LENGTH, DATARATE, TRANSMISSION_MODE, NUM_STREAMS, CODE_TYPE, SERVICE, LPI, and BURST_DURATION, and the PMD parameter TXPWR_LEVEL.

The PLCP shall issue PMD_TXPWRLVL, PMD_RATE, PMD_NUM_STREAMS, and PMD_TRANSMISSION_MODE, primitives to configure the PHY. The PLCP shall then issue a PMD_TXSTART.request, and transmission of the PLCP preamble and PLCP header, based on the parameters passed in the PHY-TXSTART.request primitive will begin. Once PLCP preamble transmission is started, the PHY entity shall immediately initiate data scrambling and data encoding. The scrambled and encoded data shall then be exchanged between the MAC and the PHY through a series of PHYDATA.request(DATA) primitives issued by the MAC, and PHY-DATA.confirm primitives issued by the PHY. The modulation rate change, if any, shall be initiated from the SERVICE field data of the PLCP header, as described in 20.3.2. The PHY proceeds with PSDU transmission through a series of data octet transfers from the MAC. The PLCP header parameter, SERVICE, and PSDU are encoded by the convolutional encoder with the bit-stealing function described in 20.3.5.5. At the PMD layer, the data octets are sent in bit 0–7 order and presented to the PHY through PMD_DATA.request primitives. In the PMD, the GI shall be inserted in every OFDM symbol as a countermeasure against severe delay spread.

Transmission of a PSDU can be prematurely terminated by the MAC through the primitive PHY-TXEND.request. PHY-TXSTART shall be disabled by the issuance of the PHY-TXEND.request. Normal transmission of a PSDU occurs after the transmission of the final bit of the last PSDU octet, according to the number of bytes supplied in the PLCP header LENGTH.

Each PHY-TXEND.request is acknowledged with a PHY-TXEND.confirm primitive from the PHY. If the coded PSDU (C-PSDU) is not multiples of the OFDM symbol, bits shall be stuffed to make the C-PSDU length multiples of the OFDM symbol.

If an aggregated PPDU (A-PPDU) is being transmitted as indicated by the TXVECTOR LPI parameter, the PHY will wait for the next PHY_TXSTART.request from the MAC. The process of transmitting the subsequent MPDUs as part of the A-PPDU is identical to the first MPDU except that the PLCP will not issue PMD primitives to configure the PHY.

Normal termination of the A-PPDU occurs at the termination of the transmission of the last PSDU, indicated by the PHY PLCP header LPI field. A permaturely terminated PSDU transmission from the MAC will prematurely terminate the transmission of the A-PPDU.

The A-PPDU transmission shall be completed and the PHY entity shall enter the receive state (i.e., PHY-TXSTART shall be disabled).

A typical state machine implementation of the transmit PLCP is provided in Figure 027. Requests (.req) and confirmations (.confirm) are issued once with designated states.

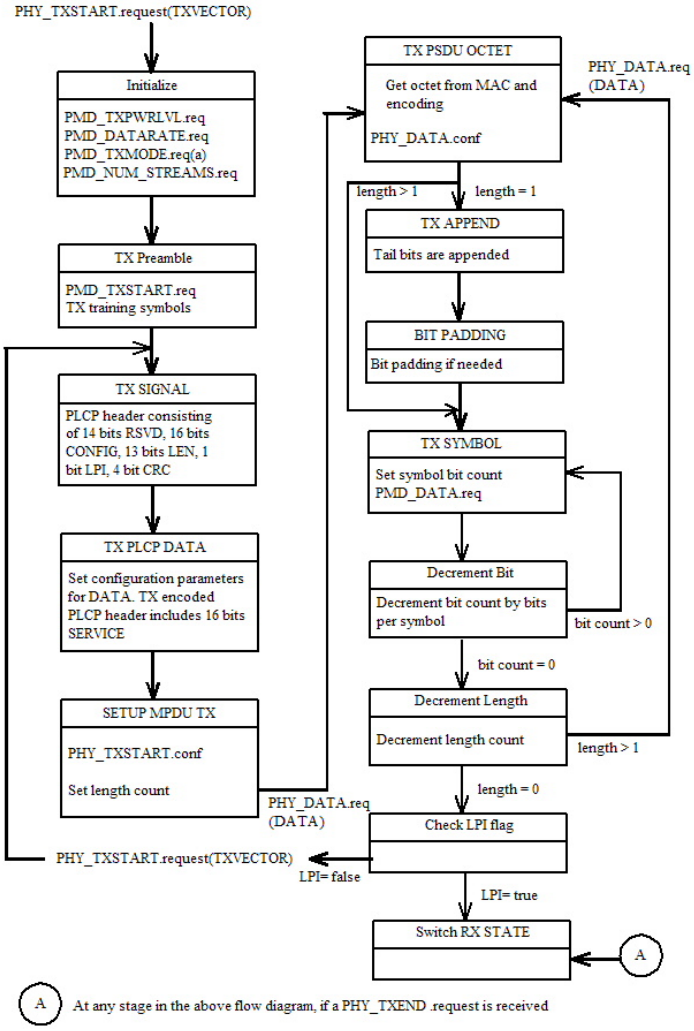

Figure 027 –PLCP transmit state machine

20.3.12 PLCP RX procedure

The receive PLCP is shown in Figure 030. In order to receive data, PHY-TXSTART.request shall be disabled so that the PHY entity is in the receive state. Further, through station management (via the PLME) the PHY is set to the appropriate frequency. Other receive parameters, such as RSSI and indicated DATARATE, TRANSMISSION_MODE, NUM_STREAMS, CODE_TYPE, LPI, and BURST_DURATION may be accessed via the PHY-SAP.

Upon receiving the transmitted PLCP preamble, PMD_RSSI.indicate shall report a significant received signal strength level to the PLCP. This indicates activity to the MAC via PHY_CCA.indicate. PHY_CCA.indicate(BUSY) shall be issued for reception of a signal prior to correct reception of the PLCP frame. The PMD primitive PMD_RSSI is issued to update the RSSI and parameter reported to the MAC.

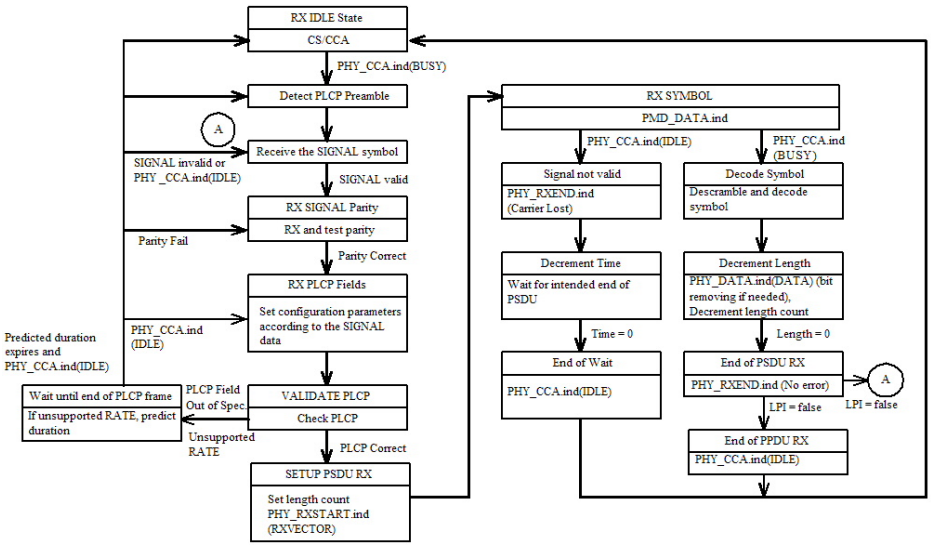

Figure 028 – PLCP receive state machine

After PHY-CCA.indicate is issued, the PHY entity shall begin receiving the training symbols and searching for the SIGNAL in order to set the length of the data stream, the demodulation type, and the decoding rate. Once the SIGNAL is detected without any errors detected by the CRC checker, FEC decode shall be initiated and the PLCP SERVICE fields and data shall be received, and decoded. Should the status of CCA return to the IDLE state during reception prior to completion of the full PLCP processing, the PHY receiver shall return to the RX IDLE state.

If the PLCP header reception is successful (and the SIGNAL field is completely recognizable and supported), a PHY-RXSTART.indicate(RXVECTOR) shall be issued. The RXVECTOR associated with this primitive includes the SIGNAL fields, the SERVICE field, the PSDU length in bytes, and the RSSI. Also, in this case, the HT PHY will ensure that the CCA shall indicate a busy medium for the intended duration of the transmitted frame, as indicated by the LENGTH field. The received PSDU bits are assembled into octets, decoded, and presented to the MAC using a series of PHY-DATA.indicate(DATA) primitive exchanges. The rate change indicated in the SIGNAL field shall be initiated from the SERVICE field data of the PLCP header, as described in 20.3.2. The PHY shall proceed with PSDU reception. After the reception of the final bit of the last PSDU octet indicated by the PLCP header LENGTH field, the receiver shall transition to the RX IDLE state if LPI is 1 or to the RX SIGNAL state if LPI is 0 in the RXVECTOR associated with this primitive, as shown in Figure 030. If the LPI is 1 in the RXVECTOR, a PHY-RXEND.indicate(NoError) primitive shall also be issued.

In the event that a change in the RSSI causes the status of the CCA to return to the IDLE state before the complete reception of the PSDU, as indicated by the PLCP LENGTH field, the error condition PHYRXEND.indicate(CarrierLost) shall be reported to the MAC. The HT PHY will ensure that the CCA indicates a busy medium for the intended duration of the transmitted packet. If the indicated rate in the SIGNAL

field is not receivable, a PHY-RXSTART.indicate will not be issued. The PHY shall issue the error condition PHY-RXEND.indicate(UnsupportedRate). If the PLCP header is receivable, but the FCS check of the PLCP header is not valid, a PHY-RXSTART.indicate will not be issued. The PHY shall issue the error condition PHY-RXEND.indicate(FormatViolation). Any data received after the indicated data length are considered pad bits (to fill out an OFDM symbol) and should be discarded. A typical state machine implementation of the receive PLCP is given in Figure 028.

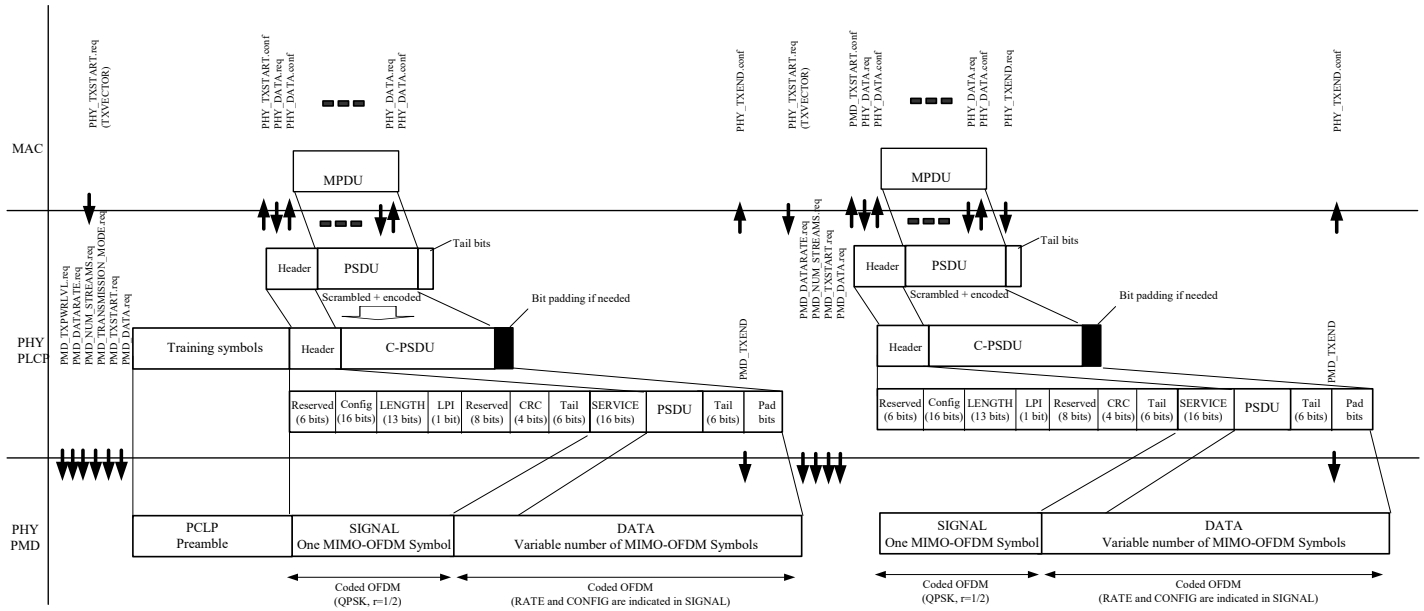

Fig. 029 PLCP transmit procedure for A-PPDU transmission in greenfield 20 MHz modes

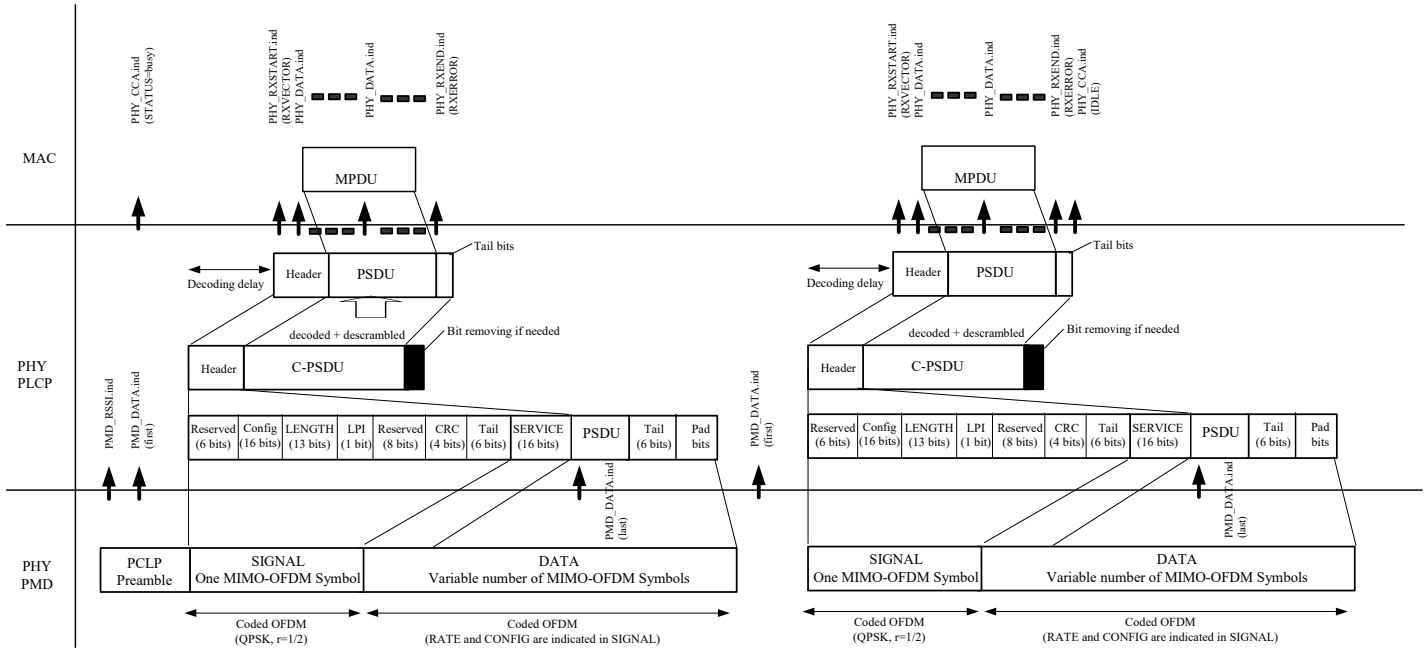

Fig. 030 PLCP receive procedure for A-PPDU reception in greenfield 20 MHz modes

20.4 MIMO-OFDM PMD operating specifications

20.4.1 PLME_SAP sublayer management primitives

Table 20.4.2T1 lists the MIB attributes that may be accessed by the PHY entities and the intralayer of higher level LMEs. These attributes are accessed via the PLME-GET, PLME-SET, PLME-RESET, and PLME-CHARACTERISTICS primitives defined in 10.4.

20.4.2 MIMO-OFDM management information base

All MIMO-OFDM PHY MIB attributes are defined in Clause 13, with specific values defined in Table 20.4.2.T1. The column titled "Operational semantics" in Table 20.4.2.T1 contains two types: static and dynamic. Static MIB attributes are fixed and cannot be modified for a given PHY implementation. Dynamic MIB attributes can be modified by some management entity.

Table 20.4.2T1 MIB attribute default values/ranges

Managed Object	Default Value / Range	Operational Semantics
dot11 PHY Operation Table		
dot11PHYtype	HTP (Value to be assigned)	Static
dot11CurrentRegDomain	Implementation dependent	Static
dot11TempType	Implementation dependent	Static
dot11 PHY Antenna Table		
dot11CurrentTxAntenna	Implementation dependent	Dynamic
dot11DiversitySupport	Implementation dependent	Static
dot11CurrentRxAntenna	Implementation dependent	Dynamic
Dot11 PHY Tx Power Table		
dot11NumberSupportedPowerLevels	Implementation dependent	Static
dot11TxPowerLevel1	Implementation dependent	Static
dot11TxPowerLevel2	Implementation dependent	Static
dot11TxPowerLevel3	Implementation dependent	Static
dot11TxPowerLevel4	Implementation dependent	Static
dot11TxPowerLevel5	Implementation dependent	Static
dot11TxPowerLevel6	Implementation dependent	Static
dot11TxPowerLevel7	Implementation	Static

	dependent	
dot11TxPowerLevel8	Implementation dependent	Static
dot11CurrentTxPowerLevel	Implementation dependent	Dynamic
dot11 Phy DSSS Table		
dot11CurrentChannel	Implementation dependent	Dynamic
dot11 Reg Domains Supported Table		
dot11RegDomainsSupportedValue (s)	Implementation dependent	Static
dot11 PHY Antennas List Table		
dot11SupportedTxAntenna	Implementation dependent	Static
dot11SupportedRxAntenna	Implementation dependent	Static
dot11DiversitySelectionRx	Implementation dependent	Dynamic
dot11 Supported Data Rates Tx Table		
dot11SupportedDataratesTxValue	See Clause 10.4.4.2 rate code columns of Tables 003-009 and Table 018	Static
dot11 Supported Data Rates Rx Table		
dot11SupportedDataRatesRxValue	See Clause 10.4.4.2 rate code columns of Tables 003-009 and Table 018	Static
dot11 PHY HTP Table		
dot11CurrentFrequency	Implementation dependent	Dynamic
dot11SupportedTransmissionModes	Assign optional types in TRANSMISSION_MODE of Table 001 to bits in bit mask	Static
dot11SupportedNumStreams	X'0' = Support 1 and 2 streams X'1' = Support 1, 2, and 3 streams X'2' = Support 1, 2, and 4 streams X'3' = Support 1, 2, 3, and 4 streams	Static
dot11SupportedCodeTypes	X'0' = convolutional only X'1' = convolutional and LDPC	Static

20.4.3 MIMO-OFDM TXTIME calculation

The value of the TXTIME parameter returned by the PLME-TXTIME.confirm primitive shall be calculated according to the following equation:

TXTIME = $TXTIME_{CONV}$ if CODE_TYPE is convolutional and $TXTIME_{LDPC}$ if CODE_TYPE is LDPC

where

$TXTIME_{CONV} = T_{MIXED} + T_{PREAMBLE} + T_{SIGNAL} + T_{SYM} \times \text{Ceiling}((16 + 8 \times LENGTH + 6 \times N_{ES})/N_{DBPS})$

$TXTIME_{LDPC} = T_{MIXED} + T_{PREAMBLE} + T_{SIGNAL} + T_{SYM} \cdot N_{S1}$

T_{MIXED} is 20µs if TRANSMISSION_MODE is a ~~mixed mode~~mixed-mode and 0µs if it is a greenfield mode

$T_{PREAMBLE}$ is 16µs if TRANSMISSION_MODE specifies $N_{TX} = 2$ and 28µs if TRANSMISSION_MODE specifies $N_{TX} = 3$ or 4

T_{SIGNAL} is 4µs

N_{DBPS} is derived from the DATARATE parameter (Ceiling is a function that returns the smallest integer value greater than or equal to its argument value)

N_{S1} is defined in subclause 20.3.5.7.3.

20.4.4 MIMO-OFDM PHY characteristics

Table 20.4.4.1—MIMO-OFDM PHY characteristics

Characteristic	Value
aSlotTime	9 µs
aSIFSTime	16 µs
aRIFSTime	2 µs
aCCATime	<4 µs
aRxTxTurnaroundTime	Implementation dependent as long as the requirements of aSIFSTime are met.
aTxRxTurnaroundTime	Implementation dependent as long as the requirements of aSIFSTime are met.
aTxPLCPDelay	Implementation dependent as long as the requirements of aRxTxTurnaroundTime are met.
aRxPLCPDelay	Implementation dependent as long as the requirements of aSIFSTime and aCCATime are met
aRxTxSwitchTime	Implementation dependent
aTxRampOnTime	Implementation dependent as long as the requirements of aRxTxTurnaroundTime are met
aTxRampOffTime	Implementation dependent as long as the requirements of aSIFSTime are met
ATxRFDelay	Implementation dependent as long as the requirements of aRxTxTurnaroundTime are met
ARxRFDelay	Implementation dependent as long as the requirements of aSIFSTime and aCCATime are met
aAirPropagationTime	<<1 µs
aMACProcessingDelay	<2 µs
aPreambleLength	16 µs
aPLCPHeaderLength	4 µs

aMPDUMaxLength	8191
aCWmin	15
aCWmax	1023

20.5 MIMO-OFDM operating specifications

20.5.1 Scope and field of application

This subclause describes the PMD services provided to the PLCP for the MIMO-OFDM PHY.

20.5.2 Overview of service

The MIMO-OFDM sublayer accepts PLCP sublayer service primitives and provides the actual means by which data is transmitted or received from the medium. The combined functions of the MIMO-OFDM PMD sublayer primitives and parameters for the receive function result in a data stream, timing information, and associated received signal parameters being delivered to the PLCP sublayer. A similar functionality is provided for data transmission.

20.5.3 Overview of interactions

The primitives associated with the PLCP sublayer to the MIMO-OFDM fall into two basic categories

a) Service primitives that support PLCP peer-to-peer interactions;
b) Service primitives that have local significance and that support sublayer-to-sublayer interactions.

20.5.4 Basic services and options

All of the service primitives described in this subclause are considered mandatory, unless otherwise specified.

20.5.4.1 PMD_SAP peer-to-peer service primitives

Table 20.5.4.1 indicates the primitives for peer-to-peer interactions.

Table 20.5.4.1 PMD_SAP peer-to-peer services

Primitive	Request	Indicate	Confirm	Response
PMD_Data	X	X		

20.5.4.2 PMD_SAP sublayer-to-sublayer service primitives

Table 19.9.4.2 indicates the primitives for sublayer-to-sublayer interactions.

Formatted: Normal

Formatted: English (United States)

Table 19.9.4.2 PMD_SAP sublayer-to-sublayer services

Primitive	Request	Indicate	Confirm	Response
PMD_TXSTART	X			
PMD_TXEND	X			
PMD_ANTSEL	X			
PMD_TXPWRLVL	X			
PMD_TRANSMISSION_MODE	X			
PMD_NUM_STREAMS	X			
PMD_DATARATE	X			
PMD_RSSI		X		

20.5.4.3 PMD_SAP service primitive parameters

Table 19.9.4.3 shows the parameters used by one or more of the PMD_SAP service primitives.

Table 20.5.4.3 List of parameters for the PMD primitives

Parameter	Associated primitive	Value	Description
TXD_UNIT	PMD_DATA.request	0 to (2^n)-1, where n is the number of bits per symbol for the transmission mode, number of streams, and data rate specified in PMD_TRANSMISSION_MODE.request, PMD_NUM_STREAMS.request, and PMD_DATARATE.request primitives.	This parameter represents a single block of data, which, in turn, is used by the PMD to be encoded into a transmitted symbol.
RXD_UNIT	PMD_DATA.indicate	0 to (2^n)-1, where n is the number of bits per symbol for the transmission mode, number of streams, and data rate specified in PMD_TRANSMISSION_MODE.request, PMD_NUM_STREAMS.request, and PMD_DATARATE.request primitives.	This parameter represents a single symbol that has been demodulated by the PMD entity.
TRANSMISSION_ MODE	PMD_TRANSMISSION_MODE.request	See Table 001 in 20.2	This parameter specifies to the PMD layer, which transmission mode is used.
ANT_STATE	PMD_ANTSEL.request	1 to 256	ANT_STATE selects which of the available antennas is used for transmission.

			The number of available antennas is determined from the MIB table parameters.
TXPWR_LEVEL	PMD_TXPWRLVL.request	1-8	TXPWR_LEVEL selects which of the optional transmit power levels should be used for the current PPDU transmission. The number of available power levels is determined from the MIB table parameters.
DATARATE	PMD_DATARATE.request	See Clause 10.4.4.2 rate code columns of Tables 003-009 and Table 018	DATARATE selects which of the data rates is used for PSDU transmission.
RSSI	PMD_RSSI.indicate	8 bits of RSSI (256 levels)	The RSSI is a measure of the RF energy received. Mapping of the RSSI values to actual received power is implementation dependent.

20.5.5 PMD_SAP detailed service specification

The following subclauses describe the services provided by each PMD primitive.

20.5.5.1 PMD_DATA.request

This primitive is the same as that defined in 17.5.5.1 and 18.4.5.1 except that the parameter TXD_UNIT is expanded in scope to reflect the supported transmission formats defined in 20.5.4.3.

20.5.5.2 PMD_DATA.indicate

This primitive is the same as that defined in 17.5.5.2 and 18.4.5.2 except that the parameter RXD_UNIT is expanded in scope to reflect the supported transmission formats defined in 20.5.4.3.

20.5.5.3 PMD_TRANSMISSION_MODE.request

This primitive is the same as that defined in 18.4.5.3 except that the parameter MODULATION of that section is expanded in scope to reflect the supported transmission formats defined in 20.5.4.3.

20.5.5.4 PMD_TXSTART.request

This primitive is the same as that defined in 17.5.5.3 and 18.4.5.6.

20.5.5.5 PMD_TXEND.request

This primitive is the same as that defined in 17.5.5.4 and 18.4.5.7.

20.5.5.6 PMD_ANTSEL.request

This primitive is the same as that defined in 18.4.5.8, including the definition of the parameter ANT_STATE.

20.5.5.7 PMD_TXPRWLVL.request

This primitive is the same as that defined in 17.5.5.5, including the definition of the parameter TXPWR_LEVEL.

20.5.5.8 PMD_DATARATE.request

This primitive is the same as that defined in 17.5.5.6 and 18.4.5.10, except that the parameter DATARATE is expanded in scope to reflect the supported MIMO-OFDM transmission modes as defined in 20.5.4.3.

20.5.5.9 PMD_RSSI.indicate

This primitive is the same as that defined in 17.5.5.7 and 18.4.5.11, including the parameter RSSI. This primitive is used to aid in link optimization algorithms such as roaming decisions.

Formatted: English (United States)

~~Annex A – LDPC matrix definitions~~

~~(normative)~~

~~**Table A.1 – Description of the matrix prototype of the rate 1/2 parity check matrix**~~

~~Row~~	~~Col~~	~~Shift~~
~~0~~	~~3~~	~~9~~
~~0~~	~~7~~	~~15~~
~~0~~	~~16~~	~~5~~
~~0~~	~~22~~	~~23~~
~~0~~	~~32~~	~~6~~
~~0~~	~~35~~	~~12~~
~~0~~	~~36~~	~~23~~
~~1~~	~~2~~	~~12~~
~~1~~	~~6~~	~~16~~
~~1~~	~~10~~	~~19~~
~~1~~	~~26~~	~~12~~
~~1~~	~~31~~	~~23~~
~~1~~	~~36~~	~~5~~
~~1~~	~~37~~	~~24~~
~~2~~	~~2~~	~~9~~
~~2~~	~~9~~	~~15~~
~~2~~	~~16~~	~~2~~
~~2~~	~~29~~	~~15~~
~~2~~	~~37~~	~~8~~
~~2~~	~~37~~	~~9~~
~~2~~	~~38~~	~~2~~
~~3~~	~~1~~	~~11~~
~~3~~	~~5~~	~~15~~
~~3~~	~~14~~	~~17~~

~~3~~	~~22~~	~~7~~
~~3~~	~~36~~	~~12~~
~~3~~	~~38~~	~~19~~
~~3~~	~~39~~	~~25~~
~~4~~	~~4~~	~~15~~
~~4~~	~~8~~	~~3~~
~~4~~	~~10~~	~~15~~
~~4~~	~~26~~	~~16~~
~~4~~	~~34~~	~~6~~
~~4~~	~~39~~	~~6~~
~~4~~	~~40~~	~~10~~
~~5~~	~~4~~	~~20~~
~~5~~	~~10~~	~~24~~
~~5~~	~~11~~	~~17~~
~~5~~	~~23~~	~~4~~
~~5~~	~~33~~	~~25~~
~~5~~	~~40~~	~~24~~
~~5~~	~~41~~	~~15~~
~~6~~	~~1~~	~~14~~
~~6~~	~~5~~	~~17~~
~~6~~	~~13~~	~~0~~
~~6~~	~~28~~	~~14~~
~~6~~	~~35~~	~~16~~
~~6~~	~~41~~	~~24~~
~~6~~	~~42~~	~~5~~
~~7~~	~~1~~	~~7~~
~~7~~	~~9~~	~~7~~
~~7~~	~~11~~	~~3~~
~~7~~	~~21~~	~~12~~
~~7~~	~~30~~	~~18~~

~~7~~	~~42~~	~~15~~
~~7~~	~~43~~	~~21~~
~~8~~	~~2~~	~~9~~
~~8~~	~~7~~	~~25~~
~~8~~	~~10~~	~~4~~
~~8~~	~~18~~	~~15~~
~~8~~	~~34~~	~~15~~
~~8~~	~~43~~	~~18~~
~~8~~	~~44~~	~~18~~
~~9~~	~~4~~	~~13~~
~~9~~	~~9~~	~~5~~
~~9~~	~~18~~	~~6~~
~~9~~	~~20~~	~~3~~
~~9~~	~~39~~	~~8~~
~~9~~	~~44~~	~~14~~
~~9~~	~~45~~	~~15~~
~~10~~	~~0~~	~~3~~
~~10~~	~~7~~	~~11~~
~~10~~	~~11~~	~~10~~
~~10~~	~~23~~	~~21~~
~~10~~	~~33~~	~~17~~
~~10~~	~~45~~	~~13~~
~~10~~	~~46~~	~~12~~
~~11~~	~~1~~	~~11~~
~~11~~	~~9~~	~~9~~
~~11~~	~~11~~	~~15~~
~~11~~	~~29~~	~~6~~
~~11~~	~~38~~	~~11~~
~~11~~	~~46~~	~~9~~
~~11~~	~~47~~	~~5~~

~~12~~	~~5~~	~~16~~
~~12~~	~~5~~	~~22~~
~~12~~	~~10~~	~~9~~
~~12~~	~~24~~	~~0~~
~~12~~	~~45~~	~~5~~
~~12~~	~~47~~	~~7~~
~~12~~	~~48~~	~~10~~
~~13~~	~~3~~	~~13~~
~~13~~	~~10~~	~~0~~
~~13~~	~~13~~	~~20~~
~~13~~	~~20~~	~~23~~
~~13~~	~~42~~	~~7~~
~~13~~	~~48~~	~~21~~
~~13~~	~~49~~	~~14~~
~~14~~	~~3~~	~~8~~
~~14~~	~~7~~	~~1~~
~~14~~	~~11~~	~~3~~
~~14~~	~~25~~	~~24~~
~~14~~	~~46~~	~~3~~
~~14~~	~~49~~	~~3~~
~~14~~	~~50~~	~~7~~
~~15~~	~~0~~	~~8~~
~~15~~	~~9~~	~~0~~
~~15~~	~~11~~	~~5~~
~~15~~	~~19~~	~~26~~
~~15~~	~~31~~	~~8~~
~~15~~	~~50~~	~~5~~
~~15~~	~~51~~	~~2~~
~~16~~	~~4~~	~~4~~
~~16~~	~~8~~	~~6~~

~~16~~	~~15~~	~~4~~
~~16~~	~~19~~	~~11~~
~~16~~	~~43~~	~~20~~
~~16~~	~~51~~	~~5~~
~~16~~	~~52~~	~~16~~
~~17~~	~~1~~	~~10~~
~~17~~	~~5~~	~~24~~
~~17~~	~~10~~	~~13~~
~~17~~	~~27~~	~~3~~
~~17~~	~~32~~	~~26~~
~~17~~	~~52~~	~~7~~
~~17~~	~~53~~	~~24~~
~~18~~	~~4~~	~~10~~
~~18~~	~~8~~	~~8~~
~~18~~	~~12~~	~~10~~
~~18~~	~~30~~	~~21~~
~~18~~	~~48~~	~~7~~
~~18~~	~~53~~	~~16~~
~~18~~	~~54~~	~~17~~
~~19~~	~~4~~	~~23~~
~~19~~	~~6~~	~~15~~
~~19~~	~~14~~	~~14~~
~~19~~	~~28~~	~~4~~
~~19~~	~~50~~	~~5~~
~~19~~	~~54~~	~~13~~
~~19~~	~~55~~	~~11~~
~~20~~	~~3~~	~~9~~
~~20~~	~~6~~	~~18~~
~~20~~	~~15~~	~~16~~
~~20~~	~~25~~	~~5~~

~~20~~	~~40~~	~~0~~
~~20~~	~~55~~	~~12~~
~~20~~	~~56~~	~~8~~
~~21~~	~~0~~	~~4~~
~~21~~	~~6~~	~~20~~
~~21~~	~~11~~	~~6~~
~~21~~	~~24~~	~~9~~
~~21~~	~~55~~	~~20~~
~~21~~	~~56~~	~~24~~
~~21~~	~~57~~	~~12~~
~~22~~	~~2~~	~~10~~
~~22~~	~~8~~	~~12~~
~~22~~	~~12~~	~~12~~
~~22~~	~~27~~	~~4~~
~~22~~	~~53~~	~~3~~
~~22~~	~~57~~	~~0~~
~~22~~	~~58~~	~~19~~
~~23~~	~~0~~	~~2~~
~~23~~	~~9~~	~~17~~
~~23~~	~~17~~	~~17~~
~~23~~	~~21~~	~~9~~
~~23~~	~~49~~	~~14~~
~~23~~	~~58~~	~~22~~
~~23~~	~~59~~	~~23~~
~~24~~	~~1~~	~~16~~
~~24~~	~~7~~	~~5~~
~~24~~	~~17~~	~~7~~
~~24~~	~~29~~	~~12~~
~~24~~	~~56~~	~~19~~
~~24~~	~~59~~	~~23~~

AXW-2028-099

~~24~~	~~60~~	~~4~~
~~25~~	~~0~~	~~8~~
~~25~~	~~8~~	~~13~~
~~25~~	~~18~~	~~1~~
~~25~~	~~28~~	~~25~~
~~25~~	~~44~~	~~1~~
~~25~~	~~60~~	~~26~~
~~25~~	~~61~~	~~13~~
~~26~~	~~4~~	~~1~~
~~26~~	~~9~~	~~1~~
~~26~~	~~21~~	~~10~~
~~26~~	~~26~~	~~12~~
~~26~~	~~52~~	~~3~~
~~26~~	~~61~~	~~6~~
~~26~~	~~62~~	~~18~~
~~27~~	~~3~~	~~21~~
~~27~~	~~5~~	~~8~~
~~27~~	~~22~~	~~13~~
~~27~~	~~27~~	~~17~~
~~27~~	~~59~~	~~21~~
~~27~~	~~62~~	~~21~~
~~27~~	~~63~~	~~12~~
~~28~~	~~1~~	~~13~~
~~28~~	~~8~~	~~26~~
~~28~~	~~20~~	~~18~~
~~28~~	~~32~~	~~11~~
~~28~~	~~58~~	~~21~~
~~28~~	~~63~~	~~23~~
~~28~~	~~64~~	~~3~~
~~29~~	~~2~~	~~16~~

~~29~~	~~5~~	~~6~~
~~29~~	~~19~~	~~10~~
~~29~~	~~25~~	~~17~~
~~29~~	~~54~~	~~20~~
~~29~~	~~64~~	~~16~~
~~29~~	~~65~~	~~8~~
~~30~~	~~3~~	~~16~~
~~30~~	~~7~~	~~15~~
~~30~~	~~16~~	~~1~~
~~30~~	~~31~~	~~0~~
~~30~~	~~41~~	~~13~~
~~30~~	~~65~~	~~15~~
~~30~~	~~66~~	~~17~~
~~31~~	~~0~~	~~20~~
~~31~~	~~6~~	~~8~~
~~31~~	~~15~~	~~4~~
~~31~~	~~34~~	~~1~~
~~31~~	~~51~~	~~22~~
~~31~~	~~66~~	~~4~~
~~31~~	~~67~~	~~8~~
~~32~~	~~2~~	~~11~~
~~32~~	~~7~~	~~17~~
~~32~~	~~13~~	~~3~~
~~32~~	~~33~~	~~12~~
~~32~~	~~57~~	~~20~~
~~32~~	~~67~~	~~7~~
~~32~~	~~68~~	~~3~~
~~33~~	~~0~~	~~19~~
~~33~~	~~6~~	~~22~~
~~33~~	~~14~~	~~8~~

~~33~~	~~30~~	~~14~~
~~33~~	~~35~~	~~18~~
~~33~~	~~68~~	~~16~~
~~33~~	~~69~~	~~0~~
~~34~~	~~3~~	~~6~~
~~34~~	~~6~~	~~0~~
~~34~~	~~17~~	~~16~~
~~34~~	~~24~~	~~19~~
~~34~~	~~47~~	~~12~~
~~34~~	~~69~~	~~1~~
~~34~~	~~70~~	~~21~~
~~35~~	~~2~~	~~22~~
~~35~~	~~8~~	~~22~~
~~35~~	~~12~~	~~26~~
~~35~~	~~23~~	~~1~~
~~35~~	~~70~~	~~5~~
~~35~~	~~71~~	~~st~~

~~**Table A.2 – Description of the matrix prototype of the rate 2/3 parity check matrix**~~

~~**Row**~~	~~**Col**~~	~~**Shift**~~
~~0~~	~~5~~	~~16~~
~~0~~	~~5~~	~~22~~
~~0~~	~~10~~	~~9~~
~~0~~	~~24~~	~~0~~
~~0~~	~~45~~	~~5~~
~~0~~	~~47~~	~~7~~
~~0~~	~~48~~	~~10~~
~~1~~	~~3~~	~~13~~

~~1~~	~~10~~	~~0~~
~~1~~	~~13~~	~~20~~
~~1~~	~~20~~	~~23~~
~~1~~	~~42~~	~~7~~
~~1~~	~~48~~	~~21~~
~~1~~	~~49~~	~~14~~
~~2~~	~~3~~	~~8~~
~~2~~	~~7~~	~~1~~
~~2~~	~~11~~	~~3~~
~~2~~	~~25~~	~~24~~
~~2~~	~~46~~	~~3~~
~~2~~	~~49~~	~~3~~
~~2~~	~~50~~	~~7~~
~~3~~	~~0~~	~~8~~
~~3~~	~~9~~	~~0~~
~~3~~	~~11~~	~~5~~
~~3~~	~~19~~	~~26~~
~~3~~	~~31~~	~~8~~
~~3~~	~~50~~	~~5~~
~~3~~	~~51~~	~~2~~
~~4~~	~~4~~	~~4~~
~~4~~	~~8~~	~~6~~
~~4~~	~~15~~	~~4~~
~~4~~	~~19~~	~~11~~
~~4~~	~~43~~	~~20~~
~~4~~	~~51~~	~~5~~
~~4~~	~~52~~	~~16~~

~~5~~	~~1~~	~~10~~
~~5~~	~~5~~	~~24~~
~~5~~	~~10~~	~~13~~
~~5~~	~~27~~	~~3~~
~~5~~	~~32~~	~~26~~
~~5~~	~~52~~	~~7~~
~~5~~	~~53~~	~~24~~
~~6~~	~~3~~	~~9~~
~~6~~	~~4~~	~~10~~
~~6~~	~~7~~	~~15~~
~~6~~	~~8~~	~~8~~
~~6~~	~~12~~	~~10~~
~~6~~	~~16~~	~~5~~
~~6~~	~~22~~	~~23~~
~~6~~	~~30~~	~~21~~
~~6~~	~~32~~	~~6~~
~~6~~	~~35~~	~~12~~
~~6~~	~~36~~	~~23~~
~~6~~	~~48~~	~~7~~
~~6~~	~~53~~	~~16~~
~~6~~	~~54~~	~~17~~
~~7~~	~~2~~	~~12~~
~~7~~	~~4~~	~~23~~
~~7~~	~~6~~	~~15~~
~~7~~	~~6~~	~~16~~
~~7~~	~~10~~	~~19~~
~~7~~	~~14~~	~~14~~

~~7~~	~~26~~	~~12~~
~~7~~	~~28~~	~~4~~
~~7~~	~~31~~	~~23~~
~~7~~	~~36~~	~~5~~
~~7~~	~~37~~	~~24~~
~~7~~	~~50~~	~~5~~
~~7~~	~~54~~	~~13~~
~~7~~	~~55~~	~~11~~
~~8~~	~~2~~	~~9~~
~~8~~	~~3~~	~~9~~
~~8~~	~~6~~	~~18~~
~~8~~	~~9~~	~~15~~
~~8~~	~~15~~	~~16~~
~~8~~	~~16~~	~~2~~
~~8~~	~~25~~	~~5~~
~~8~~	~~29~~	~~15~~
~~8~~	~~37~~	~~8~~
~~8~~	~~37~~	~~9~~
~~8~~	~~38~~	~~2~~
~~8~~	~~40~~	~~0~~
~~8~~	~~55~~	~~12~~
~~8~~	~~56~~	~~8~~
~~9~~	~~0~~	~~4~~
~~9~~	~~1~~	~~11~~
~~9~~	~~5~~	~~15~~
~~9~~	~~6~~	~~20~~
~~9~~	~~11~~	~~6~~

~~9~~	~~14~~	~~17~~
~~9~~	~~22~~	~~7~~
~~9~~	~~24~~	~~9~~
~~9~~	~~36~~	~~12~~
~~9~~	~~38~~	~~19~~
~~9~~	~~39~~	~~25~~
~~9~~	~~55~~	~~20~~
~~9~~	~~56~~	~~24~~
~~9~~	~~57~~	~~12~~
~~10~~	~~2~~	~~10~~
~~10~~	~~4~~	~~15~~
~~10~~	~~8~~	~~3~~
~~10~~	~~8~~	~~12~~
~~10~~	~~10~~	~~15~~
~~10~~	~~12~~	~~12~~
~~10~~	~~26~~	~~16~~
~~10~~	~~27~~	~~4~~
~~10~~	~~34~~	~~6~~
~~10~~	~~39~~	~~6~~
~~10~~	~~40~~	~~10~~
~~10~~	~~53~~	~~3~~
~~10~~	~~57~~	~~0~~
~~10~~	~~58~~	~~19~~
~~11~~	~~0~~	~~2~~
~~11~~	~~4~~	~~20~~
~~11~~	~~9~~	~~17~~
~~11~~	~~10~~	~~24~~

~~11~~	~~11~~	~~17~~
~~11~~	~~17~~	~~17~~
~~11~~	~~21~~	~~9~~
~~11~~	~~23~~	~~4~~
~~11~~	~~33~~	~~25~~
~~11~~	~~40~~	~~24~~
~~11~~	~~41~~	~~15~~
~~11~~	~~49~~	~~14~~
~~11~~	~~58~~	~~22~~
~~11~~	~~59~~	~~23~~
~~12~~	~~1~~	~~14~~
~~12~~	~~1~~	~~16~~
~~12~~	~~5~~	~~17~~
~~12~~	~~7~~	~~5~~
~~12~~	~~13~~	~~0~~
~~12~~	~~17~~	~~7~~
~~12~~	~~28~~	~~14~~
~~12~~	~~29~~	~~12~~
~~12~~	~~35~~	~~16~~
~~12~~	~~41~~	~~24~~
~~12~~	~~42~~	~~5~~
~~12~~	~~56~~	~~19~~
~~12~~	~~59~~	~~23~~
~~12~~	~~60~~	~~4~~
~~13~~	~~0~~	~~8~~
~~13~~	~~1~~	~~7~~
~~13~~	~~8~~	~~13~~

~~13~~	~~9~~	~~7~~
~~13~~	~~11~~	~~3~~
~~13~~	~~18~~	~~1~~
~~13~~	~~21~~	~~12~~
~~13~~	~~28~~	~~25~~
~~13~~	~~30~~	~~18~~
~~13~~	~~42~~	~~15~~
~~13~~	~~43~~	~~21~~
~~13~~	~~44~~	~~1~~
~~13~~	~~60~~	~~26~~
~~13~~	~~61~~	~~13~~
~~14~~	~~2~~	~~9~~
~~14~~	~~4~~	~~1~~
~~14~~	~~7~~	~~25~~
~~14~~	~~9~~	~~1~~
~~14~~	~~10~~	~~4~~
~~14~~	~~18~~	~~15~~
~~14~~	~~21~~	~~10~~
~~14~~	~~26~~	~~12~~
~~14~~	~~34~~	~~15~~
~~14~~	~~43~~	~~18~~
~~14~~	~~44~~	~~18~~
~~14~~	~~52~~	~~3~~
~~14~~	~~61~~	~~6~~
~~14~~	~~62~~	~~18~~
~~15~~	~~3~~	~~21~~
~~15~~	~~4~~	~~13~~

~~15~~	~~5~~	~~8~~
~~15~~	~~9~~	~~5~~
~~15~~	~~18~~	~~6~~
~~15~~	~~20~~	~~3~~
~~15~~	~~22~~	~~13~~
~~15~~	~~27~~	~~17~~
~~15~~	~~39~~	~~8~~
~~15~~	~~44~~	~~14~~
~~15~~	~~45~~	~~15~~
~~15~~	~~59~~	~~21~~
~~15~~	~~62~~	~~21~~
~~15~~	~~63~~	~~12~~
~~16~~	~~0~~	~~3~~
~~16~~	~~1~~	~~13~~
~~16~~	~~7~~	~~11~~
~~16~~	~~8~~	~~26~~
~~16~~	~~11~~	~~10~~
~~16~~	~~20~~	~~18~~
~~16~~	~~23~~	~~21~~
~~16~~	~~32~~	~~11~~
~~16~~	~~33~~	~~17~~
~~16~~	~~45~~	~~13~~
~~16~~	~~46~~	~~12~~
~~16~~	~~58~~	~~21~~
~~16~~	~~63~~	~~23~~
~~16~~	~~64~~	~~3~~
~~17~~	~~1~~	~~11~~

~~17~~	~~2~~	~~16~~
~~17~~	~~5~~	~~6~~
~~17~~	~~9~~	~~9~~
~~17~~	~~11~~	~~15~~
~~17~~	~~19~~	~~10~~
~~17~~	~~25~~	~~17~~
~~17~~	~~29~~	~~6~~
~~17~~	~~38~~	~~11~~
~~17~~	~~46~~	~~9~~
~~17~~	~~47~~	~~5~~
~~17~~	~~54~~	~~20~~
~~17~~	~~64~~	~~16~~
~~17~~	~~65~~	~~8~~
~~18~~	~~3~~	~~16~~
~~18~~	~~7~~	~~15~~
~~18~~	~~16~~	~~1~~
~~18~~	~~31~~	~~0~~
~~18~~	~~41~~	~~13~~
~~18~~	~~65~~	~~15~~
~~18~~	~~66~~	~~17~~
~~19~~	~~0~~	~~20~~
~~19~~	~~6~~	~~8~~
~~19~~	~~15~~	~~4~~
~~19~~	~~34~~	~~1~~
~~19~~	~~51~~	~~22~~
~~19~~	~~66~~	~~4~~
~~19~~	~~67~~	~~8~~

~~20~~	~~2~~	~~11~~
~~20~~	~~7~~	~~17~~
~~20~~	~~13~~	~~3~~
~~20~~	~~33~~	~~12~~
~~20~~	~~57~~	~~20~~
~~20~~	~~67~~	~~7~~
~~20~~	~~68~~	~~3~~
~~21~~	~~0~~	~~19~~
~~21~~	~~6~~	~~22~~
~~21~~	~~14~~	~~8~~
~~21~~	~~30~~	~~14~~
~~21~~	~~35~~	~~18~~
~~21~~	~~68~~	~~16~~
~~21~~	~~69~~	~~0~~
~~22~~	~~3~~	~~6~~
~~22~~	~~6~~	~~0~~
~~22~~	~~17~~	~~16~~
~~22~~	~~24~~	~~19~~
~~22~~	~~47~~	~~12~~
~~22~~	~~69~~	~~1~~
~~22~~	~~70~~	~~21~~
~~23~~	~~2~~	~~22~~
~~23~~	~~8~~	~~22~~
~~23~~	~~12~~	~~26~~
~~23~~	~~23~~	~~1~~
~~23~~	~~70~~	~~5~~
~~23~~	~~71~~	~~st~~

~~Table A.3 – Description of the matrix prototype of the rate 3/4 parity check matrix~~

~~Row~~	~~Col~~	~~Shift~~
~~0~~	~~3~~	~~9~~
~~0~~	~~4~~	~~10~~
~~0~~	~~7~~	~~15~~
~~0~~	~~8~~	~~8~~
~~0~~	~~12~~	~~10~~
~~0~~	~~16~~	~~5~~
~~0~~	~~22~~	~~23~~
~~0~~	~~30~~	~~21~~
~~0~~	~~32~~	~~6~~
~~0~~	~~35~~	~~12~~
~~0~~	~~36~~	~~23~~
~~0~~	~~48~~	~~7~~
~~0~~	~~53~~	~~16~~
~~0~~	~~54~~	~~17~~
~~1~~	~~2~~	~~12~~
~~1~~	~~4~~	~~23~~
~~1~~	~~6~~	~~15~~
~~1~~	~~6~~	~~16~~
~~1~~	~~10~~	~~19~~
~~1~~	~~14~~	~~14~~
~~1~~	~~26~~	~~12~~
~~1~~	~~28~~	~~4~~
~~1~~	~~31~~	~~23~~

~~1~~	~~36~~	~~5~~
~~1~~	~~37~~	~~24~~
~~1~~	~~50~~	~~5~~
~~1~~	~~54~~	~~13~~
~~1~~	~~55~~	~~11~~
~~2~~	~~2~~	~~9~~
~~2~~	~~3~~	~~9~~
~~2~~	~~6~~	~~18~~
~~2~~	~~9~~	~~15~~
~~2~~	~~15~~	~~16~~
~~2~~	~~16~~	~~2~~
~~2~~	~~25~~	~~5~~
~~2~~	~~29~~	~~15~~
~~2~~	~~37~~	~~8~~
~~2~~	~~37~~	~~9~~
~~2~~	~~38~~	~~2~~
~~2~~	~~40~~	~~0~~
~~2~~	~~55~~	~~12~~
~~2~~	~~56~~	~~8~~
~~3~~	~~0~~	~~4~~
~~3~~	~~1~~	~~11~~
~~3~~	~~5~~	~~15~~
~~3~~	~~6~~	~~20~~
~~3~~	~~11~~	~~6~~
~~3~~	~~14~~	~~17~~
~~3~~	~~22~~	~~7~~
~~3~~	~~24~~	~~9~~

~~3~~	~~36~~	~~12~~
~~3~~	~~38~~	~~19~~
~~3~~	~~39~~	~~25~~
~~3~~	~~55~~	~~20~~
~~3~~	~~56~~	~~24~~
~~3~~	~~57~~	~~12~~
~~4~~	~~2~~	~~10~~
~~4~~	~~4~~	~~15~~
~~4~~	~~8~~	~~3~~
~~4~~	~~8~~	~~12~~
~~4~~	~~10~~	~~15~~
~~4~~	~~12~~	~~12~~
~~4~~	~~26~~	~~16~~
~~4~~	~~27~~	~~4~~
~~4~~	~~34~~	~~6~~
~~4~~	~~39~~	~~6~~
~~4~~	~~40~~	~~10~~
~~4~~	~~53~~	~~3~~
~~4~~	~~57~~	~~0~~
~~4~~	~~58~~	~~19~~
~~5~~	~~0~~	~~2~~
~~5~~	~~4~~	~~20~~
~~5~~	~~9~~	~~17~~
~~5~~	~~10~~	~~24~~
~~5~~	~~11~~	~~17~~
~~5~~	~~17~~	~~17~~
~~5~~	~~21~~	~~9~~

~~5~~	~~23~~	~~4~~
~~5~~	~~33~~	~~25~~
~~5~~	~~40~~	~~24~~
~~5~~	~~41~~	~~15~~
~~5~~	~~49~~	~~14~~
~~5~~	~~58~~	~~22~~
~~5~~	~~59~~	~~23~~
~~6~~	~~1~~	~~14~~
~~6~~	~~1~~	~~16~~
~~6~~	~~5~~	~~17~~
~~6~~	~~7~~	~~5~~
~~6~~	~~13~~	~~0~~
~~6~~	~~17~~	~~7~~
~~6~~	~~28~~	~~14~~
~~6~~	~~29~~	~~12~~
~~6~~	~~35~~	~~16~~
~~6~~	~~41~~	~~24~~
~~6~~	~~42~~	~~5~~
~~6~~	~~56~~	~~19~~
~~6~~	~~59~~	~~23~~
~~6~~	~~60~~	~~4~~
~~7~~	~~0~~	~~8~~
~~7~~	~~1~~	~~7~~
~~7~~	~~8~~	~~13~~
~~7~~	~~9~~	~~7~~
~~7~~	~~11~~	~~3~~
~~7~~	~~18~~	~~1~~

~~7~~	~~21~~	~~12~~
~~7~~	~~28~~	~~25~~
~~7~~	~~30~~	~~18~~
~~7~~	~~42~~	~~15~~
~~7~~	~~43~~	~~21~~
~~7~~	~~44~~	~~1~~
~~7~~	~~60~~	~~26~~
~~7~~	~~61~~	~~13~~
~~8~~	~~2~~	~~9~~
~~8~~	~~4~~	~~1~~
~~8~~	~~7~~	~~25~~
~~8~~	~~9~~	~~1~~
~~8~~	~~10~~	~~4~~
~~8~~	~~18~~	~~15~~
~~8~~	~~21~~	~~10~~
~~8~~	~~26~~	~~12~~
~~8~~	~~34~~	~~15~~
~~8~~	~~43~~	~~18~~
~~8~~	~~44~~	~~18~~
~~8~~	~~52~~	~~3~~
~~8~~	~~61~~	~~6~~
~~8~~	~~62~~	~~18~~
~~9~~	~~3~~	~~21~~
~~9~~	~~4~~	~~13~~
~~9~~	~~5~~	~~8~~
~~9~~	~~9~~	~~5~~
~~9~~	~~18~~	~~6~~

~~9~~	~~20~~	~~3~~
~~9~~	~~22~~	~~13~~
~~9~~	~~27~~	~~17~~
~~9~~	~~39~~	~~8~~
~~9~~	~~44~~	~~14~~
~~9~~	~~45~~	~~15~~
~~9~~	~~59~~	~~21~~
~~9~~	~~62~~	~~21~~
~~9~~	~~63~~	~~12~~
~~10~~	~~0~~	~~3~~
~~10~~	~~1~~	~~13~~
~~10~~	~~7~~	~~11~~
~~10~~	~~8~~	~~26~~
~~10~~	~~11~~	~~10~~
~~10~~	~~20~~	~~18~~
~~10~~	~~23~~	~~21~~
~~10~~	~~32~~	~~11~~
~~10~~	~~33~~	~~17~~
~~10~~	~~45~~	~~13~~
~~10~~	~~46~~	~~12~~
~~10~~	~~58~~	~~21~~
~~10~~	~~63~~	~~23~~
~~10~~	~~64~~	~~3~~
~~11~~	~~1~~	~~11~~
~~11~~	~~2~~	~~16~~
~~11~~	~~5~~	~~6~~
~~11~~	~~9~~	~~9~~

~~11~~	~~11~~	~~15~~
~~11~~	~~19~~	~~10~~
~~11~~	~~25~~	~~17~~
~~11~~	~~29~~	~~6~~
~~11~~	~~38~~	~~11~~
~~11~~	~~46~~	~~9~~
~~11~~	~~47~~	~~5~~
~~11~~	~~54~~	~~20~~
~~11~~	~~64~~	~~16~~
~~11~~	~~65~~	~~8~~
~~12~~	~~3~~	~~16~~
~~12~~	~~5~~	~~16~~
~~12~~	~~5~~	~~22~~
~~12~~	~~7~~	~~15~~
~~12~~	~~10~~	~~9~~
~~12~~	~~16~~	~~1~~
~~12~~	~~24~~	~~0~~
~~12~~	~~31~~	~~0~~
~~12~~	~~41~~	~~13~~
~~12~~	~~45~~	~~5~~
~~12~~	~~47~~	~~7~~
~~12~~	~~48~~	~~10~~
~~12~~	~~65~~	~~15~~
~~12~~	~~66~~	~~17~~
~~13~~	~~0~~	~~20~~
~~13~~	~~3~~	~~13~~
~~13~~	~~6~~	~~8~~

~~13~~	~~10~~	~~0~~
~~13~~	~~13~~	~~20~~
~~13~~	~~15~~	~~4~~
~~13~~	~~20~~	~~23~~
~~13~~	~~34~~	~~1~~
~~13~~	~~42~~	~~7~~
~~13~~	~~48~~	~~21~~
~~13~~	~~49~~	~~14~~
~~13~~	~~51~~	~~22~~
~~13~~	~~66~~	~~4~~
~~13~~	~~67~~	~~8~~
~~14~~	~~2~~	~~11~~
~~14~~	~~3~~	~~8~~
~~14~~	~~7~~	~~1~~
~~14~~	~~7~~	~~17~~
~~14~~	~~11~~	~~3~~
~~14~~	~~13~~	~~3~~
~~14~~	~~25~~	~~24~~
~~14~~	~~33~~	~~12~~
~~14~~	~~46~~	~~3~~
~~14~~	~~49~~	~~3~~
~~14~~	~~50~~	~~7~~
~~14~~	~~57~~	~~20~~
~~14~~	~~67~~	~~7~~
~~14~~	~~68~~	~~3~~
~~15~~	~~0~~	~~8~~
~~15~~	~~0~~	~~19~~

~~15~~	~~6~~	~~22~~
~~15~~	~~9~~	~~0~~
~~15~~	~~11~~	~~5~~
~~15~~	~~14~~	~~8~~
~~15~~	~~19~~	~~26~~
~~15~~	~~30~~	~~14~~
~~15~~	~~31~~	~~8~~
~~15~~	~~35~~	~~18~~
~~15~~	~~50~~	~~5~~
~~15~~	~~51~~	~~2~~
~~15~~	~~68~~	~~16~~
~~15~~	~~69~~	~~0~~
~~16~~	~~3~~	~~6~~
~~16~~	~~4~~	~~4~~
~~16~~	~~6~~	~~0~~
~~16~~	~~8~~	~~6~~
~~16~~	~~15~~	~~4~~
~~16~~	~~17~~	~~16~~
~~16~~	~~19~~	~~11~~
~~16~~	~~24~~	~~19~~
~~16~~	~~43~~	~~20~~
~~16~~	~~47~~	~~12~~
~~16~~	~~51~~	~~5~~
~~16~~	~~52~~	~~16~~
~~16~~	~~69~~	~~1~~
~~16~~	~~70~~	~~21~~
~~17~~	~~1~~	~~10~~

~~17~~	~~2~~	~~22~~
~~17~~	~~5~~	~~24~~
~~17~~	~~8~~	~~22~~
~~17~~	~~10~~	~~13~~
~~17~~	~~12~~	~~26~~
~~17~~	~~23~~	~~1~~
~~17~~	~~27~~	~~3~~
~~17~~	~~32~~	~~26~~
~~17~~	~~52~~	~~7~~
~~17~~	~~53~~	~~24~~
~~17~~	~~70~~	~~5~~
~~17~~	~~71~~	~~st~~

~~**Table A.4 – Description of the matrix prototype of the rate 5/6 parity check matrix**~~

~~**Row**~~	~~**Col**~~	~~**Shift**~~
~~0~~	~~1~~	~~16~~
~~0~~	~~3~~	~~9~~
~~0~~	~~5~~	~~16~~
~~0~~	~~5~~	~~22~~
~~0~~	~~7~~	~~5~~
~~0~~	~~7~~	~~15~~
~~0~~	~~10~~	~~9~~
~~0~~	~~16~~	~~5~~
~~0~~	~~17~~	~~7~~
~~0~~	~~22~~	~~23~~
~~0~~	~~24~~	~~0~~

Formatted Table

~~0~~	~~29~~	~~12~~
~~0~~	~~32~~	~~6~~
~~0~~	~~35~~	~~12~~
~~0~~	~~36~~	~~23~~
~~0~~	~~45~~	~~5~~
~~0~~	~~47~~	~~7~~
~~0~~	~~48~~	~~10~~
~~0~~	~~56~~	~~19~~
~~0~~	~~59~~	~~23~~
~~0~~	~~60~~	~~4~~
~~1~~	~~0~~	~~8~~
~~1~~	~~2~~	~~12~~
~~1~~	~~3~~	~~13~~
~~1~~	~~6~~	~~16~~
~~1~~	~~8~~	~~13~~
~~1~~	~~10~~	~~0~~
~~1~~	~~10~~	~~19~~
~~1~~	~~13~~	~~20~~
~~1~~	~~18~~	~~1~~
~~1~~	~~20~~	~~23~~
~~1~~	~~26~~	~~12~~
~~1~~	~~28~~	~~25~~
~~1~~	~~31~~	~~23~~
~~1~~	~~36~~	~~5~~
~~1~~	~~37~~	~~24~~
~~1~~	~~42~~	~~7~~
~~1~~	~~44~~	~~1~~

~~1~~	~~48~~	~~21~~
~~1~~	~~49~~	~~14~~
~~1~~	~~60~~	~~26~~
~~1~~	~~61~~	~~13~~
~~2~~	~~2~~	~~9~~
~~2~~	~~3~~	~~8~~
~~2~~	~~4~~	~~1~~
~~2~~	~~7~~	~~1~~
~~2~~	~~9~~	~~1~~
~~2~~	~~9~~	~~15~~
~~2~~	~~11~~	~~3~~
~~2~~	~~16~~	~~2~~
~~2~~	~~21~~	~~10~~
~~2~~	~~25~~	~~24~~
~~2~~	~~26~~	~~12~~
~~2~~	~~29~~	~~15~~
~~2~~	~~37~~	~~8~~
~~2~~	~~37~~	~~9~~
~~2~~	~~38~~	~~2~~
~~2~~	~~46~~	~~3~~
~~2~~	~~49~~	~~3~~
~~2~~	~~50~~	~~7~~
~~2~~	~~52~~	~~3~~
~~2~~	~~61~~	~~6~~
~~2~~	~~62~~	~~18~~
~~3~~	~~0~~	~~8~~
~~3~~	~~1~~	~~11~~

~~3~~	~~3~~	~~21~~
~~3~~	~~5~~	~~8~~
~~3~~	~~5~~	~~15~~
~~3~~	~~9~~	~~0~~
~~3~~	~~11~~	~~5~~
~~3~~	~~14~~	~~17~~
~~3~~	~~19~~	~~26~~
~~3~~	~~22~~	~~7~~
~~3~~	~~22~~	~~13~~
~~3~~	~~27~~	~~17~~
~~3~~	~~31~~	~~8~~
~~3~~	~~36~~	~~12~~
~~3~~	~~38~~	~~19~~
~~3~~	~~39~~	~~25~~
~~3~~	~~50~~	~~5~~
~~3~~	~~51~~	~~2~~
~~3~~	~~59~~	~~21~~
~~3~~	~~62~~	~~21~~
~~3~~	~~63~~	~~12~~
~~4~~	~~1~~	~~13~~
~~4~~	~~4~~	~~4~~
~~4~~	~~4~~	~~15~~
~~4~~	~~8~~	~~3~~
~~4~~	~~8~~	~~6~~
~~4~~	~~8~~	~~26~~
~~4~~	~~10~~	~~15~~
~~4~~	~~15~~	~~4~~

~~4~~	~~19~~	~~11~~
~~4~~	~~20~~	~~18~~
~~4~~	~~26~~	~~16~~
~~4~~	~~32~~	~~11~~
~~4~~	~~34~~	~~6~~
~~4~~	~~39~~	~~6~~
~~4~~	~~40~~	~~10~~
~~4~~	~~43~~	~~20~~
~~4~~	~~51~~	~~5~~
~~4~~	~~52~~	~~16~~
~~4~~	~~58~~	~~21~~
~~4~~	~~63~~	~~23~~
~~4~~	~~64~~	~~3~~
~~5~~	~~1~~	~~10~~
~~5~~	~~2~~	~~16~~
~~5~~	~~4~~	~~20~~
~~5~~	~~5~~	~~6~~
~~5~~	~~5~~	~~24~~
~~5~~	~~10~~	~~13~~
~~5~~	~~10~~	~~24~~
~~5~~	~~11~~	~~17~~
~~5~~	~~19~~	~~10~~
~~5~~	~~23~~	~~4~~
~~5~~	~~25~~	~~17~~
~~5~~	~~27~~	~~3~~
~~5~~	~~32~~	~~26~~
~~5~~	~~33~~	~~25~~

~~5~~	~~40~~	~~24~~
~~5~~	~~41~~	~~15~~
~~5~~	~~52~~	~~7~~
~~5~~	~~53~~	~~24~~
~~5~~	~~54~~	~~20~~
~~5~~	~~64~~	~~16~~
~~5~~	~~65~~	~~8~~
~~6~~	~~1~~	~~14~~
~~6~~	~~3~~	~~16~~
~~6~~	~~4~~	~~10~~
~~6~~	~~5~~	~~17~~
~~6~~	~~7~~	~~15~~
~~6~~	~~8~~	~~8~~
~~6~~	~~12~~	~~10~~
~~6~~	~~13~~	~~0~~
~~6~~	~~16~~	~~1~~
~~6~~	~~28~~	~~14~~
~~6~~	~~30~~	~~21~~
~~6~~	~~31~~	~~0~~
~~6~~	~~35~~	~~16~~
~~6~~	~~41~~	~~13~~
~~6~~	~~41~~	~~24~~
~~6~~	~~42~~	~~5~~
~~6~~	~~48~~	~~7~~
~~6~~	~~53~~	~~16~~
~~6~~	~~54~~	~~17~~
~~6~~	~~65~~	~~15~~

~~6~~	~~66~~	~~17~~
~~7~~	~~0~~	~~20~~
~~7~~	~~1~~	~~7~~
~~7~~	~~4~~	~~23~~
~~7~~	~~6~~	~~8~~
~~7~~	~~6~~	~~15~~
~~7~~	~~9~~	~~7~~
~~7~~	~~11~~	~~3~~
~~7~~	~~14~~	~~14~~
~~7~~	~~15~~	~~4~~
~~7~~	~~21~~	~~12~~
~~7~~	~~28~~	~~4~~
~~7~~	~~30~~	~~18~~
~~7~~	~~34~~	~~1~~
~~7~~	~~42~~	~~15~~
~~7~~	~~43~~	~~21~~
~~7~~	~~50~~	~~5~~
~~7~~	~~51~~	~~22~~
~~7~~	~~54~~	~~13~~
~~7~~	~~55~~	~~11~~
~~7~~	~~66~~	~~4~~
~~7~~	~~67~~	~~8~~
~~8~~	~~2~~	~~9~~
~~8~~	~~2~~	~~11~~
~~8~~	~~3~~	~~9~~
~~8~~	~~6~~	~~18~~
~~8~~	~~7~~	~~17~~

~~8~~	~~7~~	~~25~~
~~8~~	~~10~~	~~4~~
~~8~~	~~13~~	~~3~~
~~8~~	~~15~~	~~16~~
~~8~~	~~18~~	~~15~~
~~8~~	~~25~~	~~5~~
~~8~~	~~33~~	~~12~~
~~8~~	~~34~~	~~15~~
~~8~~	~~40~~	~~0~~
~~8~~	~~43~~	~~18~~
~~8~~	~~44~~	~~18~~
~~8~~	~~55~~	~~12~~
~~8~~	~~56~~	~~8~~
~~8~~	~~57~~	~~20~~
~~8~~	~~67~~	~~7~~
~~8~~	~~68~~	~~3~~
~~9~~	~~0~~	~~4~~
~~9~~	~~0~~	~~19~~
~~9~~	~~4~~	~~13~~
~~9~~	~~6~~	~~20~~
~~9~~	~~6~~	~~22~~
~~9~~	~~9~~	~~5~~
~~9~~	~~11~~	~~6~~
~~9~~	~~14~~	~~8~~
~~9~~	~~18~~	~~6~~
~~9~~	~~20~~	~~3~~
~~9~~	~~24~~	~~9~~

~~9~~	~~30~~	~~14~~
~~9~~	~~35~~	~~18~~
~~9~~	~~39~~	~~8~~
~~9~~	~~44~~	~~14~~
~~9~~	~~45~~	~~15~~
~~9~~	~~55~~	~~20~~
~~9~~	~~56~~	~~24~~
~~9~~	~~57~~	~~12~~
~~9~~	~~68~~	~~16~~
~~9~~	~~69~~	~~0~~
~~10~~	~~0~~	~~3~~
~~10~~	~~2~~	~~10~~
~~10~~	~~3~~	~~6~~
~~10~~	~~6~~	~~0~~
~~10~~	~~7~~	~~11~~
~~10~~	~~8~~	~~12~~
~~10~~	~~11~~	~~10~~
~~10~~	~~12~~	~~12~~
~~10~~	~~17~~	~~16~~
~~10~~	~~23~~	~~21~~
~~10~~	~~24~~	~~19~~
~~10~~	~~27~~	~~4~~
~~10~~	~~33~~	~~17~~
~~10~~	~~45~~	~~13~~
~~10~~	~~46~~	~~12~~
~~10~~	~~47~~	~~12~~
~~10~~	~~53~~	~~3~~

~~10~~	~~57~~	~~0~~
~~10~~	~~58~~	~~19~~
~~10~~	~~69~~	~~1~~
~~10~~	~~70~~	~~21~~
~~11~~	~~0~~	~~2~~
~~11~~	~~1~~	~~11~~
~~11~~	~~2~~	~~22~~
~~11~~	~~8~~	~~22~~
~~11~~	~~9~~	~~9~~
~~11~~	~~9~~	~~17~~
~~11~~	~~11~~	~~15~~
~~11~~	~~12~~	~~26~~
~~11~~	~~17~~	~~17~~
~~11~~	~~21~~	~~9~~
~~11~~	~~23~~	~~1~~
~~11~~	~~29~~	~~6~~
~~11~~	~~38~~	~~11~~
~~11~~	~~46~~	~~9~~
~~11~~	~~47~~	~~5~~
~~11~~	~~49~~	~~14~~
~~11~~	~~58~~	~~22~~
~~11~~	~~59~~	~~23~~
~~11~~	~~70~~	~~5~~
~~11~~	~~71~~	~~st~~

Annex A – LDPC Matrix Definitions

(normative)

Formatted: French (France)

Table A.1 The matrix prototype of the rate-1/2 parity-check matrix. Subblock size is Z = 81 bits.

			36			17			21	46	68	0											6
1					11				2	64	17	0	0										
		38			29				1	57	44		0	0									
				13				39	72	26	43			0	0								44
	20			33					20	27	25				0	0							
			64				26		4	8	26					0	0						
21			42					55	13		73						0	0					
		19				13			60	37	80							0	0				
		5					11		35	69	68								0	0			57
	70				71			68		61	43									0	0		
	38					69		51	24	26											0	0	
42				49			13		28	4	9											0	

Table A.2 The matrix prototype of the rate-2/3 parity-check matrix. Subblock size Z = 27 bits.

columns 1-24

0		25		20			25											0		19			
18	0	24	13							5	13								0			10	

		0		19	19	7	14		20											0		7	
			0	11		11					14										0		
	3		23	0		10					22	15							22			0	
	2				0	20			17					9	24								0
17			16	8	4			17				0											
	10	8								23			0					25					
		7	12		2									0			25	4					
	11	20				5				13	12				0								
			6		26		20	13								0							
						3	6	2	8	22							0				13		
	26					0		25		20			2			4							17
				6	14	18	0	24	13														
8	15		21					0		19	19												
12					15				0	11			4	20									
11					23		3		23	0													
21			18				2				0												
		18				17			16	8	4										16		
				24			10	8								8	14						
								7	12		2				7				20				
6				14	13		11	20															
	21	14							6		26	13								5			
4	7	3	9	23																			9

columns 25-48

							1			3							16						
	15																						
																			8				
6							3	19													4		
																					1		
17				19																			
0															15					23			
	0				7					7	13												
		0							6				19										
			0	26	1																		
		11		0		12								4									
					0												8						
												0		19									
													0			10			15				
	9													0		7							
			5												0			6					
			2			15							22			0							
								9	24								0	17				19	
		24				0												0					
							0					25							0				7
								0			25	4								0			
									0												0	26	1
										0										11		0	
											0				13								0

columns 49-72

0																							D
0	0																						
	0	0																					
		0	0																				
			0	0																			
				0	0																		
					0																		
						0																	
						0	0																
							0	0															
								0	0														
									0	0													
										0	0												
											0	0											
												0	0										
													0	0									
														0	0								
															0	0							
																0	0						
																	0	0					
																		0	0				
																			0	0			
																				0	0		
																					0	0	
																						0	0

Table A.3 The matrix prototype of the rate-3/4 parity-check matrix. Subblock size is Z = 54 bits.

columns 1-18

16	14		34	44	43	0					24		46			16	35
31		17	31		30	10			52	23		38			41		
49	41		6		47	10		9						8	8		
_		29	50	30		0		40	5		46		35				43
_		34	2	12	9			15	36			40		33			
_		52	48		36	23		53			1			45	5		
53		6		5	3		41		30		6			26			53
24	50			38	43	38	43		42							25	
12		21	25	29		16	4					52			21		

columns 19-36

23							8	45	36								
45	53							51	15	31							
7	36	26							38	18	13						
			34	47	18							19	53				
		51		19	45							22	36	33			
40					19	29					52			36	26		
		48			13	46								17	35		
			7		34	34	40								43	30	
						21	40	16								41	st

Formatted: Normal

Table A.4 The matrix prototype of the rate-5/6 parity-check matrix. Subblock size is Z = 54.

columns 1-18

53	14	50	34	5	43	0	41			46	24	35		26		16	35
24	34	17	12	38	30	10	43	36	42	23			33		41		
12	41	48	6	29	23	16	53	9				52		5	8		
16	29	6	30	44	3	0	40	5	30		6		46			43	53
31	50	2	31	9	43	38	15		52		40	38				25	
49	52	21	25	36	47	10	4			1			45	8	21		40

columns 19-36

23		48		18	13	46					19	53					
45	53		7			34	40				22	36	33				
7	36	26				21	40	16		52			36	26			
		34	47				8	45	36					17	35		
	51		19	45	34			51	15	31					43	30	
				19	29				38	18	13					41	st

Annex B – Closed Loop Information Exchange

Text in this section is informative.

Closed loop methods that improve transmission by providing feedback information from receiver to transmitter are compatible with this amendment. Specific management frames to feedback information are given in sections 7.4.5. These management frames enable both transmission mode feedback and channel feedback.

Transmission mode feedback allows a receiving station to inform a transmitting station of the preferred mode for the current channel conditions. The particular choice of mode is determined by the receiving station. The transmitting station may or may not use the particular mode, depending on its capabilities. A receiving station may also decline to provide a preferred mode.

Channel feedback provides a mechanism for a transmitting station to learn the precise channel seen at the receiver. This information may either be used as part of a calibration, for systems that assume channel reciprocity, or as direct channel feedback. The usage of channel feedback information is implementation dependent. Receiving stations may either provide a complete channel estimate or a null response.