US 20060182017A1

(19) United States

(12) Patent Application Publication

(10) Pub. No.: US 2006/0182017 A1

(43) Pub. Date: Aug. 17, 2006

Hansen et al.

(54) METHOD AND SYSTEM FOR COMPROMISE GREENFIELD PREAMBLES FOR 802.11N

(76) Inventors: **Christopher J. Hansen**, Sunnyvale, CA (US); **Rajendra T. Moorti**, Mountain View, CA (US); **Jason A. Trachewsky**, Menlo Park, CA (US)

Correspondence Address:
MCANDREWS HELD & MALLOY, LTD
500 WEST MADISON STREET
SUITE 3400
CHICAGO, IL 60661

(21) Appl. No.: 11/151,772

(22) Filed: Jun. 9, 2005

Related U.S. Application Data

(60) Provisional application No. 60/653,429, filed on Feb. 16, 2005.

Publication Classification

(51) Int. Cl.
H04J 11/00 (2006.01)
H04B 7/00 (2006.01)

(52) U.S. Cl. 370/208; 370/310

(57) ABSTRACT

Aspects of the invention described herein may enable a greenfield access mode in IEEE 802.11n WLAN systems in comparison to an alternative approach that may not provide greenfield access. The utilization of greenfield access may reduce the portion of time required to transmit data due to overhead comprising preamble fields and header fields. This may enable higher data throughput rates to be achieved. This may further enable more robust transmission of data by enabling comparable data rates to be maintained while reducing the coding rate of encoded transmitted data. The reduction of the coding rate may enable comparable data rates to be maintained for transmission via RF channels characterized by lower SNR while still achieving desired target levels of packet error rates. In another aspect of the invention, mixed mode access may be achieved while reducing the portion of time required for transmitting data due to overhead.

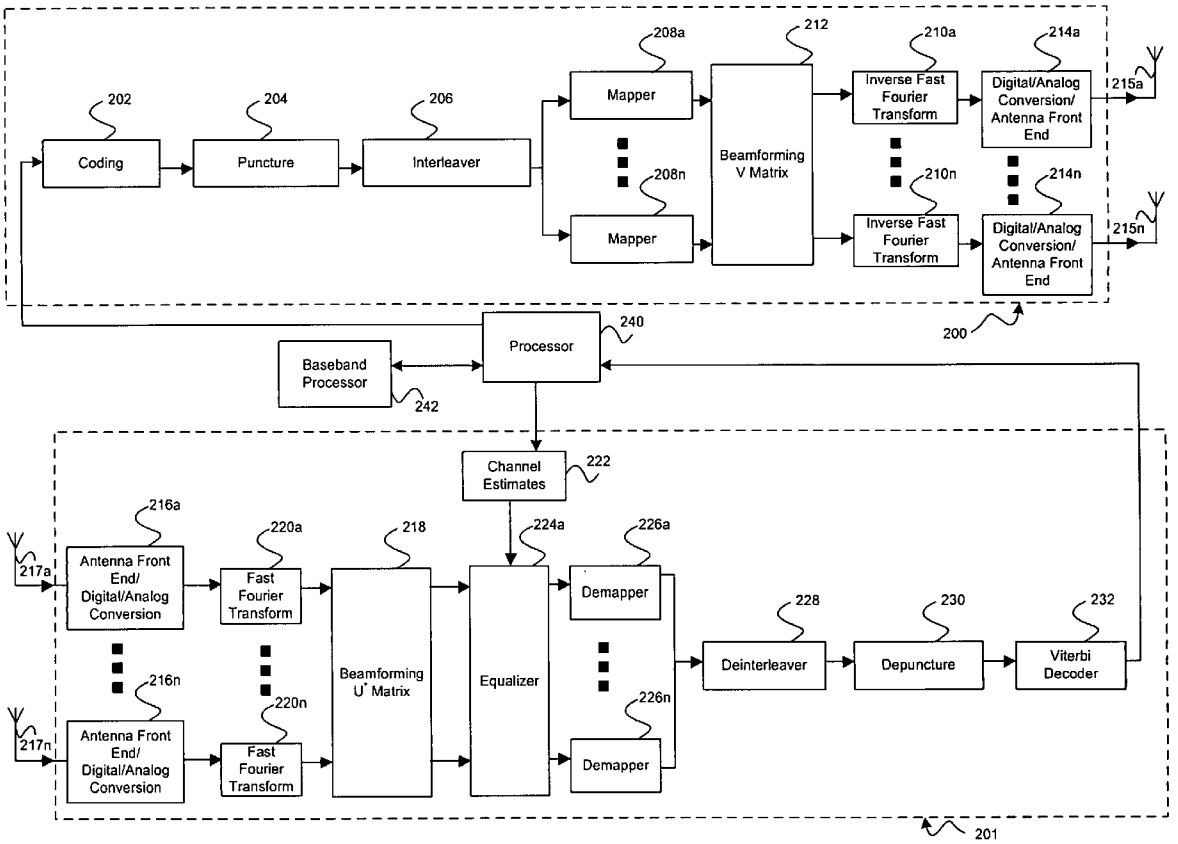

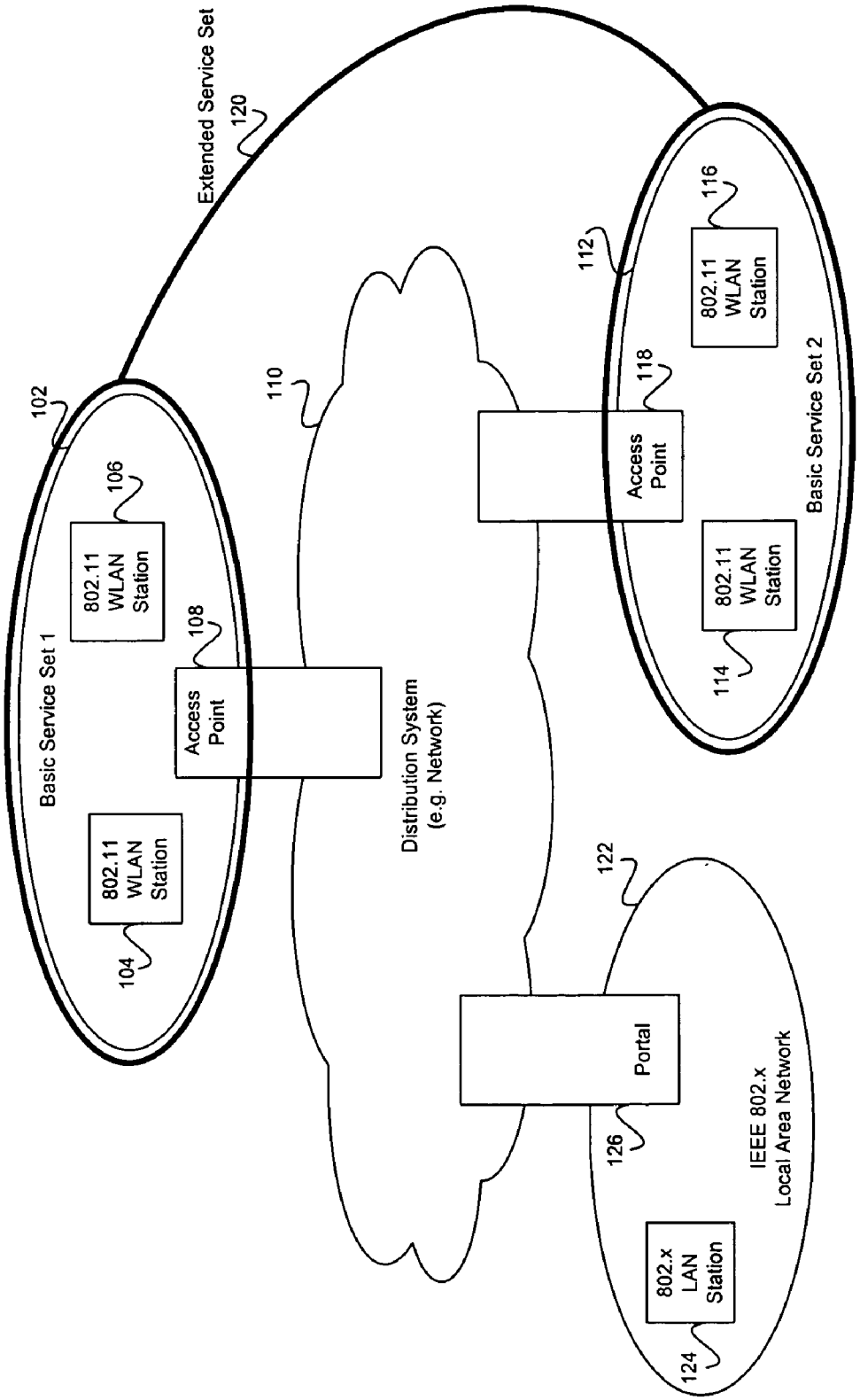
Extended Service Set
120
102
Basic Service Set 1
106
802.11 WLAN Station
108
Access Point
802.11 WLAN Station
104
110
Distribution System (e.g. Network)
112
Basic Service Set 2
116
802.11 WLAN Station
118
Access Point
802.11 WLAN Station
114
122
IEEE 802.x Local Area Network
Portal
126
802.x LAN Station
124

FIG. 1

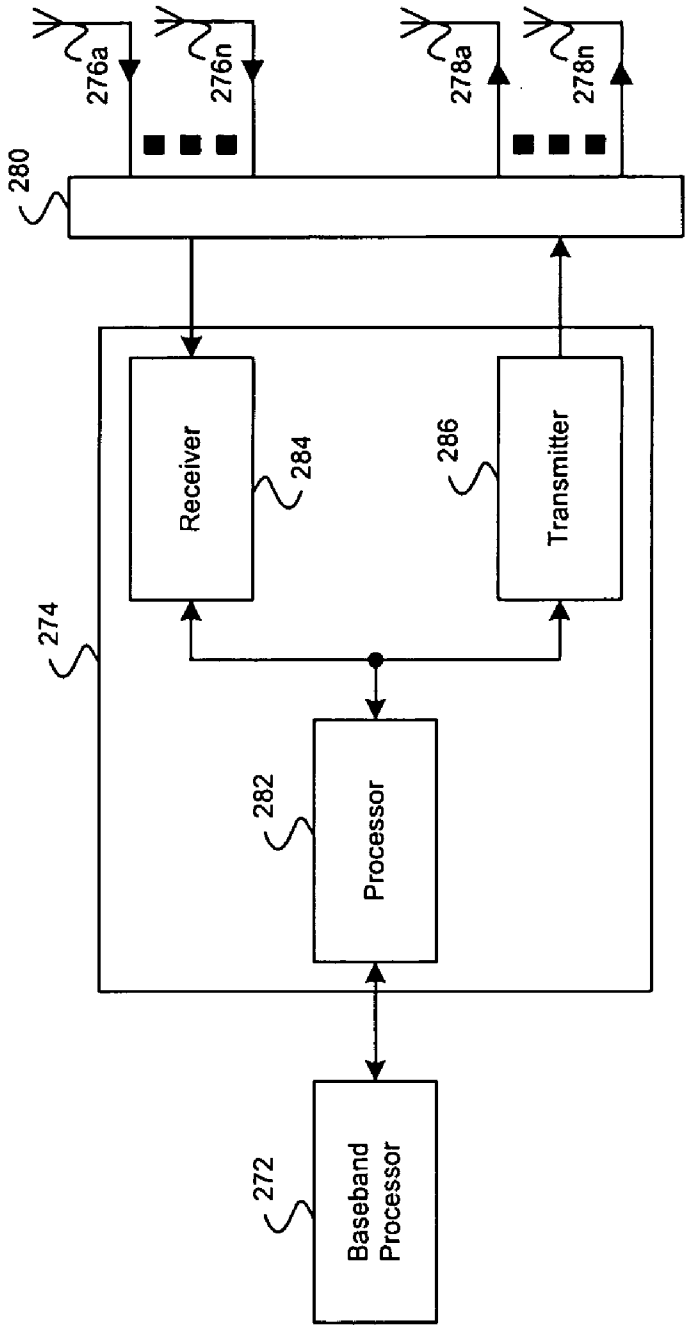
276a
276n
278a
278n
280
Receiver
284
286
Transmitter
274
282
Processor
272
Baseband Processor

FIG. 2a

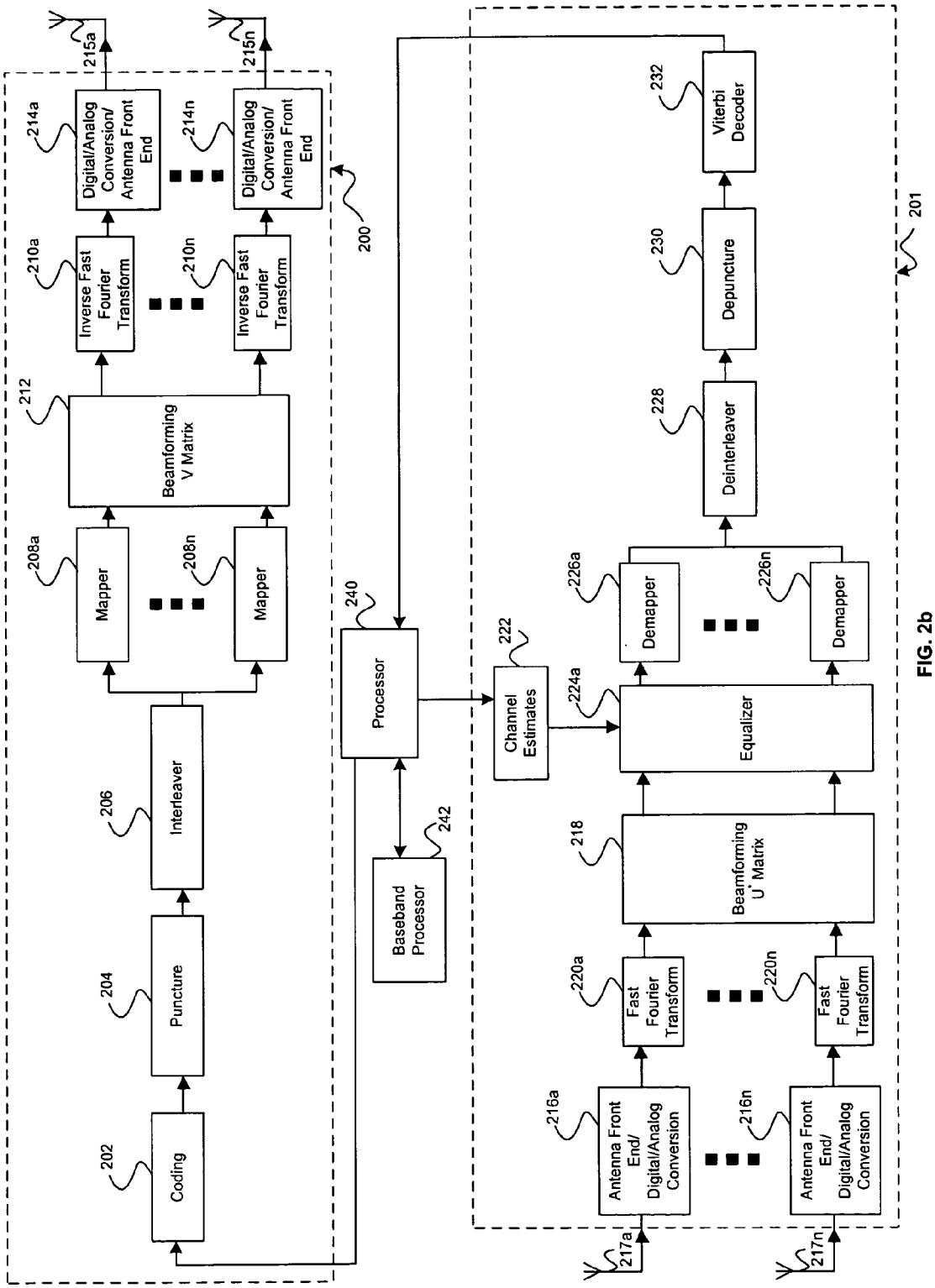
Coding
202
Puncture
204
Interleaver
206
Mapper
208a
Mapper
208n
Beamforming V Matrix
212
Inverse Fast Fourier Transform
210a
Inverse Fast Fourier Transform
210n
Digital/Analog Conversion/ Antenna Front End
214a
Digital/Analog Conversion/ Antenna Front End
214n
215a
215n
200
Processor
240
Baseband Processor
242
Channel Estimates
222
Antenna Front End/ Digital/Analog Conversion
216a
Antenna Front End/ Digital/Analog Conversion
216n
217a
217n
Fast Fourier Transform
220a
Fast Fourier Transform
220n
Beamforming U' Matrix
218
Equalizer
224a
Demapper
226a
Demapper
226n
Deinterleaver
228
Depuncture
230
Viterbi Decoder
232
201

FIG. 2b

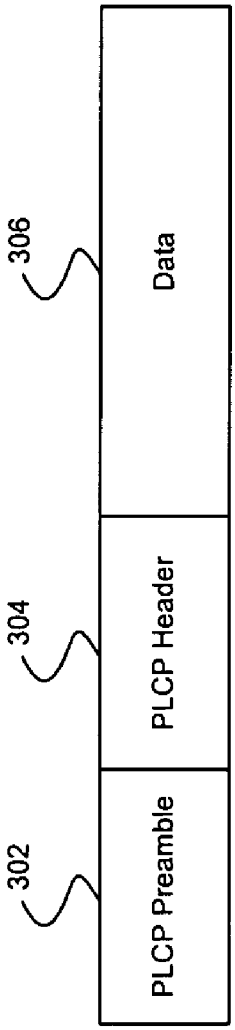
302
PLCP Preamble
304
PLCP Header
306
Data

FIG. 3a

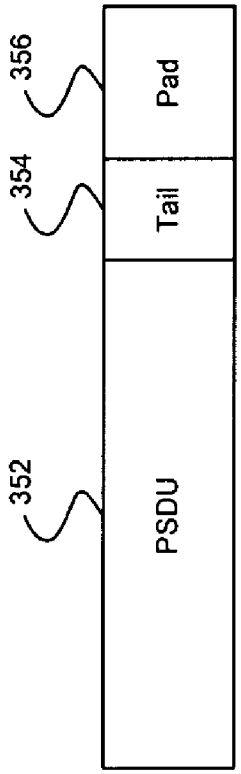
352
PSDU
354
Tail
356
Pad

FIG. 3b

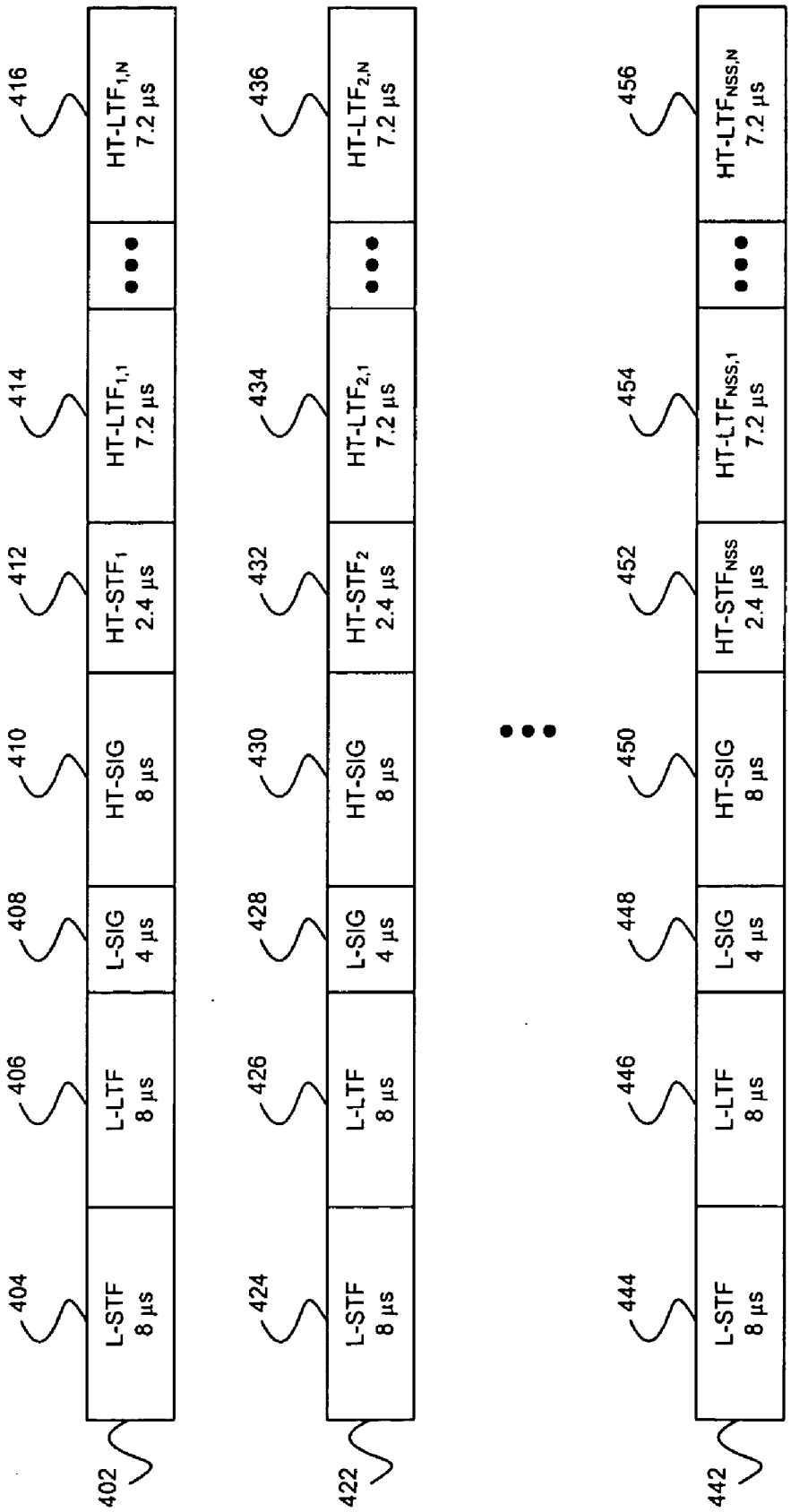
402
404
L-STF
8 µs
406
L-LTF
8 µs
408
L-SIG
4 µs
410
HT-SIG
8 µs
412
HT-STF1
2.4 µs
414
HT-LTF1,1
7.2 µs
416
HT-LTF1,N
7.2 µs
422
424
L-STF
8 µs
426
L-LTF
8 µs
428
L-SIG
4 µs
430
HT-SIG
8 µs
432
HT-STF2
2.4 µs
434
HT-LTF2,1
7.2 µs
436
HT-LTF2,N
7.2 µs
442
444
L-STF
8 µs
446
L-LTF
8 µs
448
L-SIG
4 µs
450
HT-SIG
8 µs
452
HT-STFNSS
2.4 µs
454
HT-LTFNSS,1
7.2 µs
456
HT-LTFNSS,N
7.2 µs

FIG. 4a

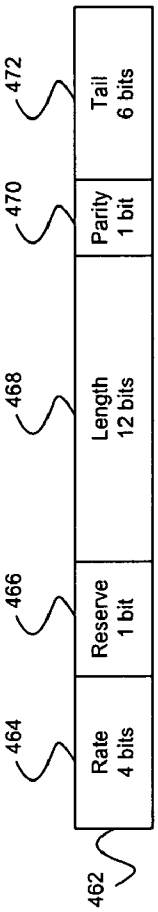
462
464
Rate
4 bits
466
Reserve
1 bit
468
Length
12 bits
470
Parity
1 bit
472
Tail
6 bits

FIG. 4b

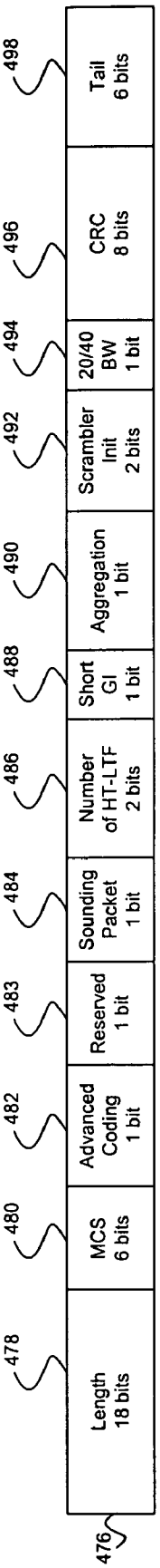
476
478
Length
18 bits
480
MCS
6 bits
482
Advanced
Coding
1 bit
483
Reserved
1 bit
484
Sounding
Packet
1 bit
486
Number
of HT-LTF
2 bits
488
Short
GI
1 bit
490
Aggregation
1 bit
492
Scrambler
Init
2 bits
494
20/40
BW
1 bit
496
CRC
8 bits
498
Tail
6 bits

FIG. 4c

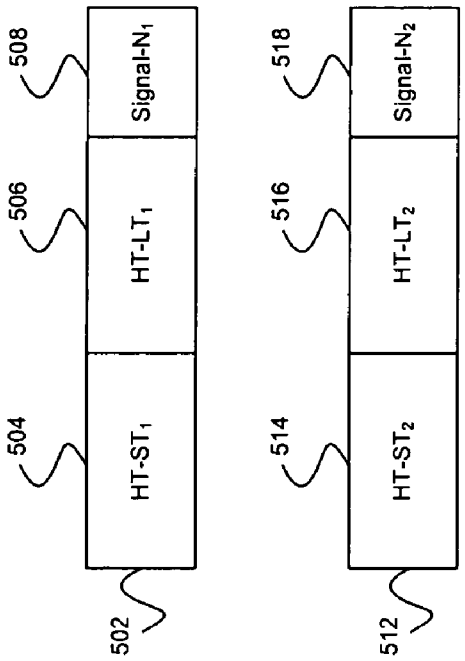
502
504
HT-ST1
506
HT-LT1
508
Signal-N1
512
514
HT-ST2
516
HT-LT2
518
Signal-N2

FIG. 5a

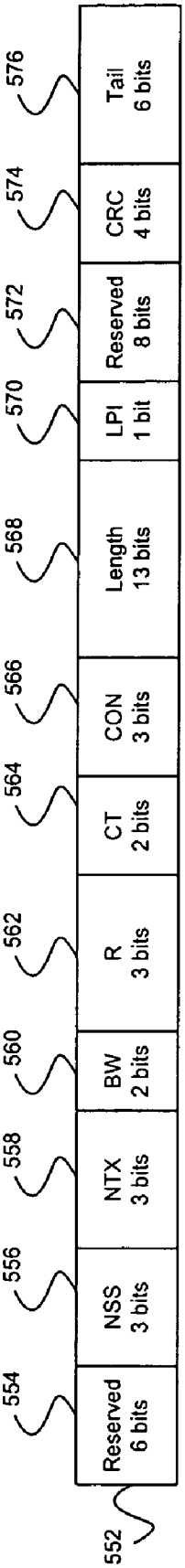
552
554
Reserved
6 bits
556
NSS
3 bits
558
NTX
3 bits
560
BW
2 bits
562
R
3 bits
564
CT
2 bits
566
CON
3 bits
568
Length
13 bits
570
LPI
1 bit
572
Reserved
8 bits
574
CRC
4 bits
576
Tail
6 bits

FIG. 5b

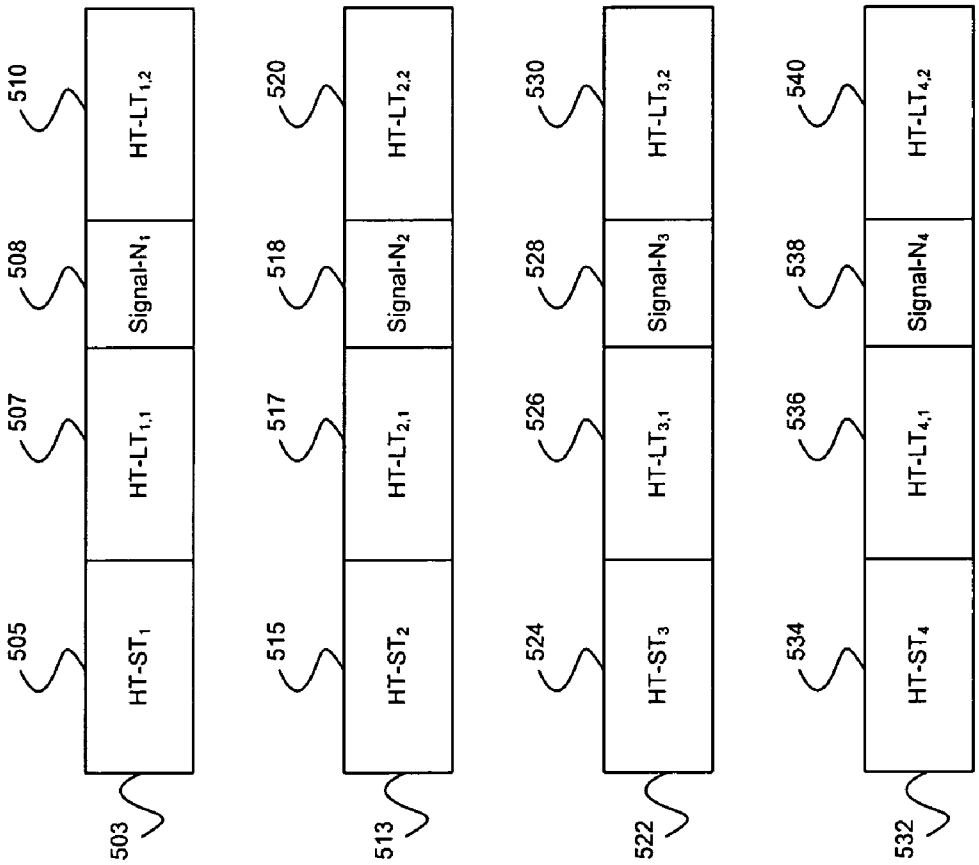
503
505
HT-ST1
507
HT-LT1,1
508
Signal-N1
510
HT-LT1,2
513
515
HT-ST2
517
HT-LT2,1
518
Signal-N2
520
HT-LT2,2
522
524
HT-ST3
526
HT-LT3,1
528
Signal-N3
530
HT-LT3,2
532
534
HT-ST4
536
HT-LT4,1
538
Signal-N4
540
HT-LT4,2

FIG. 5c

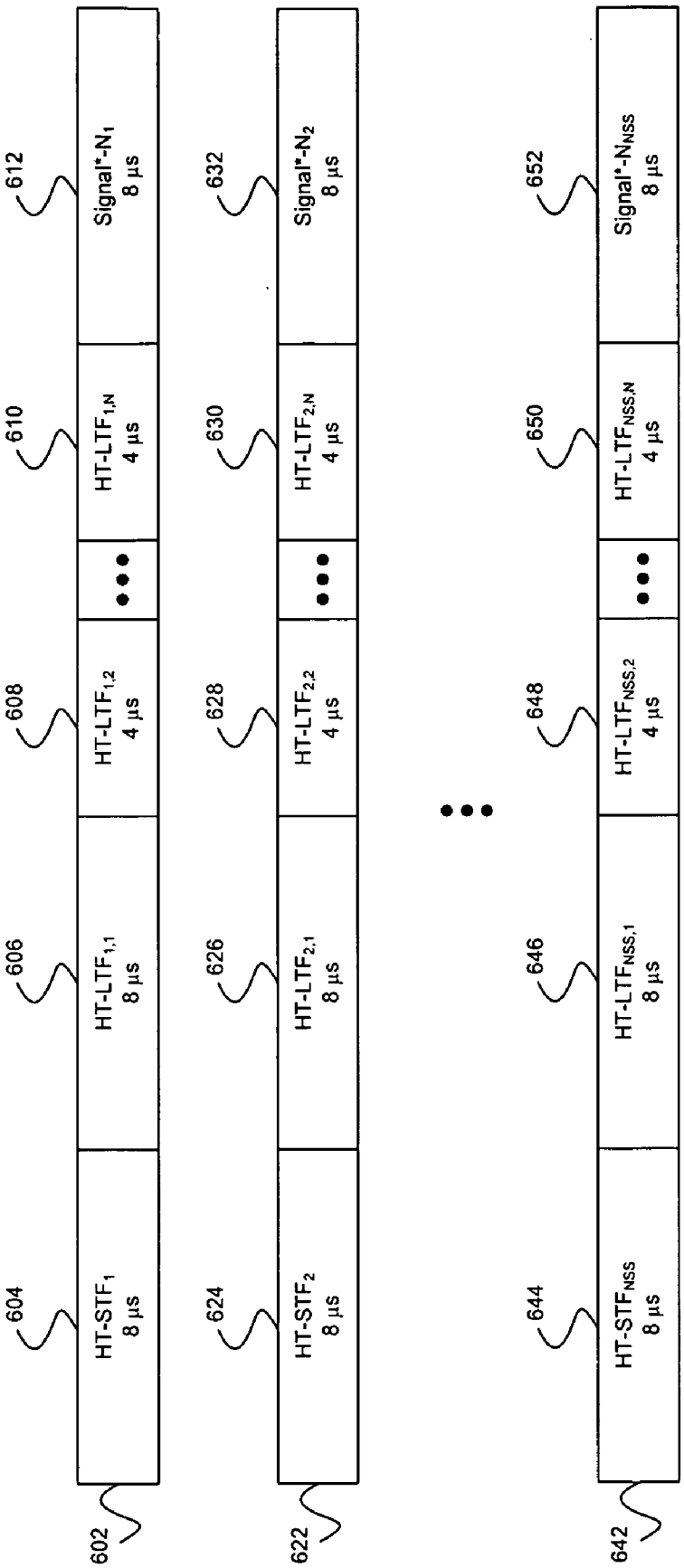
602
604
HT-STF1
8 µs
606
HT-LTF1,1
8 µs
608
HT-LTF1,2
4 µs
610
HT-LTF1,N
4 µs
612
Signal*-N1
8 µs
622
624
HT-STF2
8 µs
626
HT-LTF2,1
8 µs
628
HT-LTF2,2
4 µs
630
HT-LTF2,N
4 µs
632
Signal*-N2
8 µs
642
644
HT-STFNSS
8 µs
646
HT-LTFNSS,1
8 µs
648
HT-LTFNSS,2
4 µs
650
HT-LTFNSS,N
4 µs
652
Signal*-NNSS
8 µs

FIG. 6a

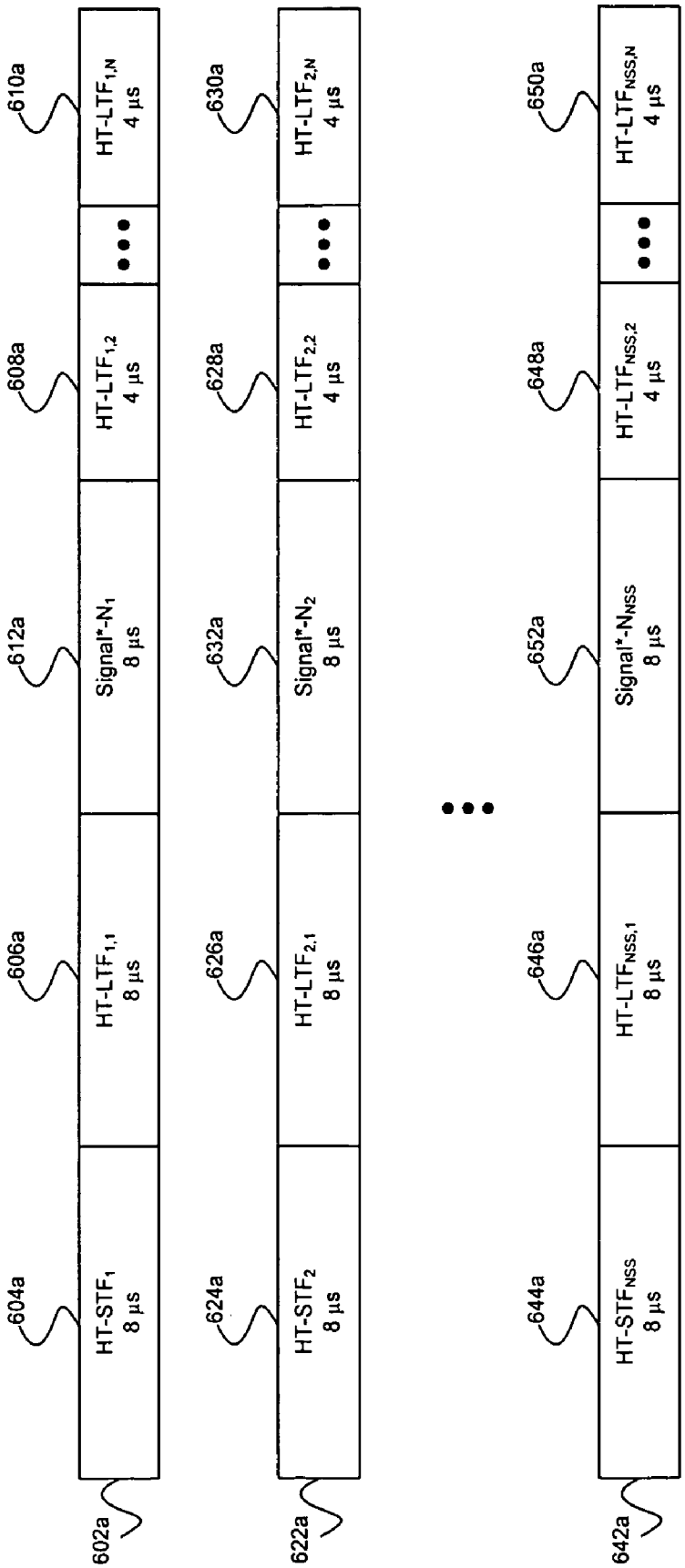
602a
604a
HT-STF1
8 µs
606a
HT-LTF1,1
8 µs
612a
Signal*-N1
8 µs
608a
HT-LTF1,2
4 µs
610a
HT-LTF1,N
4 µs
622a
624a
HT-STF2
8 µs
626a
HT-LTF2,1
8 µs
632a
Signal*-N2
8 µs
628a
HT-LTF2,2
4 µs
630a
HT-LTF2,N
4 µs
642a
644a
HT-STFNSS
8 µs
646a
HT-LTFNSS,1
8 µs
652a
Signal*-NNSS
8 µs
648a
HT-LTFNSS,2
4 µs
650a
HT-LTFNSS,N
4 µs

FIG. 6b

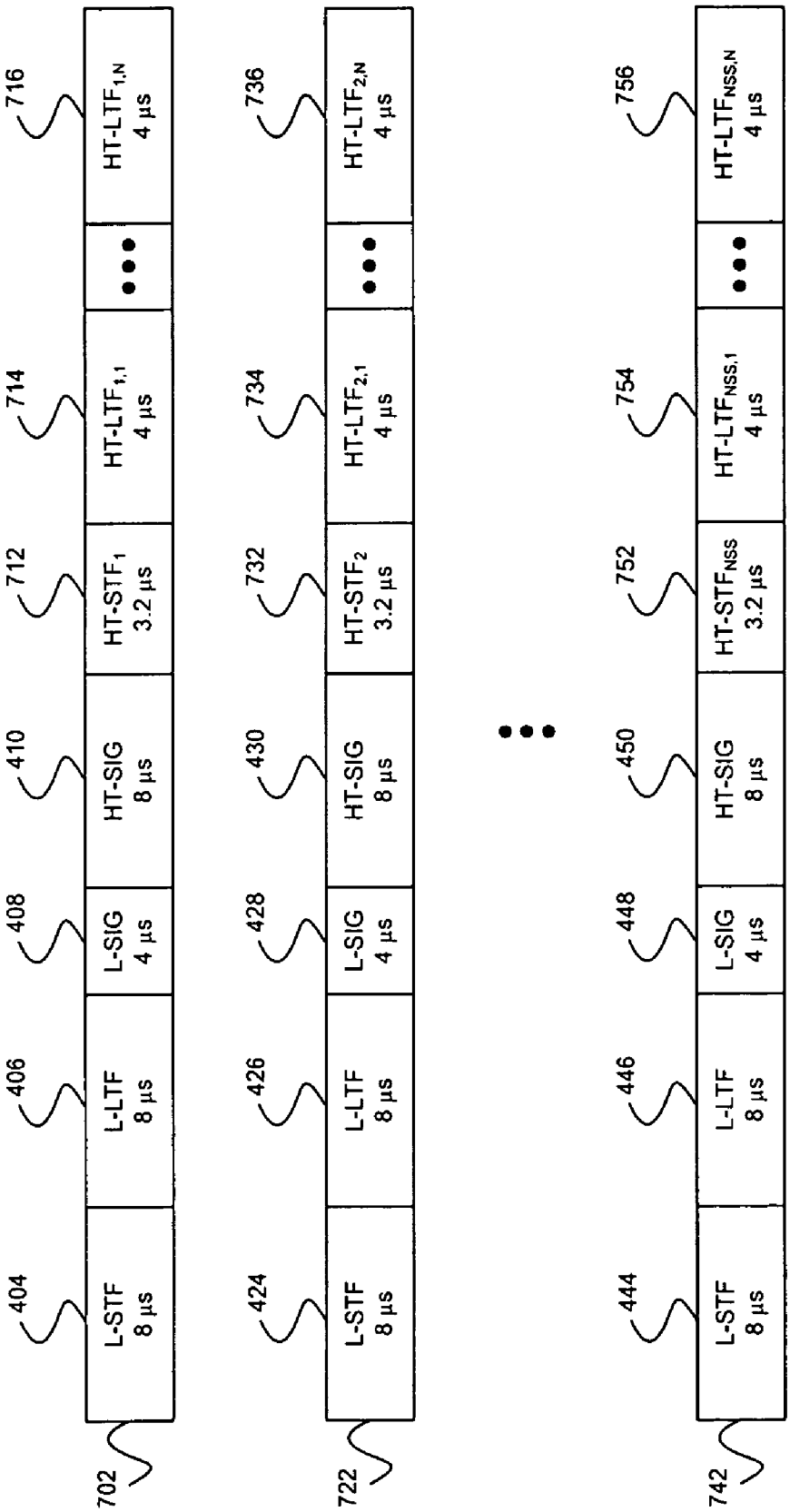
702
404
L-STF
8 µs
406
L-LTF
8 µs
408
L-SIG
4 µs
410
HT-SIG
8 µs
712
HT-STF1
3.2 µs
714
HT-LTF1,1
4 µs
716
HT-LTF1,N
4 µs
722
424
L-STF
8 µs
426
L-LTF
8 µs
428
L-SIG
4 µs
430
HT-SIG
8 µs
732
HT-STF2
3.2 µs
734
HT-LTF2,1
4 µs
736
HT-LTF2,N
4 µs
742
444
L-STF
8 µs
446
L-LTF
8 µs
448
L-SIG
4 µs
450
HT-SIG
8 µs
752
HT-STFNSS
3.2 µs
754
HT-LTFNSS,1
4 µs
756
HT-LTFNSS,N
4 µs

FIG. 7

METHOD AND SYSTEM FOR COMPROMISE GREENFIELD PREAMBLES FOR 802.11N

CROSS-REFERENCE TO RELATED APPLICATIONS/INCORPORATION BY REFERENCE

[0001] This application makes reference, claims priority to, and claims the benefit of U.S. Provisional Application Ser. No. 60/653,429 filed Feb. 16, 2005.

[0002] This application makes reference to:

[0003] U.S. patent application Ser. No. 10/973,595 filed Oct. 26, 2004;

[0004] U.S. patent application Ser. No. 11/052,353 filed Feb. 7, 2005; and

[0005] U.S. patent application Ser. No. 11/052,389 filed Feb. 7, 2005.

[0006] All of the above state applications are hereby incorporated herein by reference in their entirety.

FIELD OF THE INVENTION

[0007] Certain embodiments of the invention relate to wireless communication. More specifically, certain embodiments of the invention relate to a method and system for compromise greenfield preambles for 802.11n.

BACKGROUND OF THE INVENTION

[0008] Within the IEEE organization, IEEE 802.11 task group N (TGn) has been chartered to develop a standard to enable WLAN devices to achieve throughput rates beyond 100 Mbits/s. This standard may be documented in IEEE resolution 802.11n.

[0009] The Institute for Electrical and Electronics Engineers (IEEE), in resolution IEEE 802.11, also referred as "802.11", has defined a plurality of specifications which are related to wireless networking. With current existing 802.11 standards, such as 802.11(a),(b),(g), which may support up to 54 Mbps data rates, either in 2.4 GHz or in 5 GHz frequency bands. Within the IEEE organization, IEEE 802.11 task group N (TGn) has been chartered to develop a standard to enable WLAN devices to achieve throughput rates beyond 100 Mbits/s. This standard may be documented in IEEE resolution 802.11n. A plurality of proposals is emerging as candidates for incorporation in IEEE resolution 802.11n. Among them are proposals from TGn Sync, which is a multi-industry group working to define proposals for next generation wireless networks that are to be submitted for inclusion in IEEE 802.11n. The proposals may be based upon what may be referred as a "sounding frame". The sounding frame method may comprise the transmitting of a plurality of long training sequences (LTSs) that match the number of transmitting antenna at the receiving mobile terminal. The sounding frame method may not utilize beamforming or cyclic delay diversity (CDD). In the sounding frame method, each antenna in a multiple input multiple output (MIMO) system may transmit independent information.

[0010] Further limitations and disadvantages of conventional and traditional approaches will become apparent to one of skill in the art, through comparison of such systems with some aspects of the present invention as set forth in the remainder of the present application with reference to the drawings.

BRIEF SUMMARY OF THE INVENTION

[0011] A system and/or method for compromise greenfield preambles for 802.11n, substantially as shown in and/or described in connection with at least one of the figures, as set forth more completely in the claims.

[0012] These and other advantages, aspects and novel features of the present invention, as well as details of an illustrated embodiment thereof, will be more fully understood from the following description and drawings.

BRIEF DESCRIPTION OF SEVERAL VIEWS OF THE DRAWINGS

[0013] **FIG. 1** is a block diagram of an exemplary system for wireless data communications, which may be utilized in accordance with an embodiment of the invention.

[0014] **FIG. 2***a* is an exemplary block diagram of a transceiver which may be utilized in accordance with an embodiment of the invention.

[0015] **FIG. 2***b* is an exemplary block diagram of a transceiver comprising a transmitter and a receiver in a MIMO system, which may be utilized in accordance with an embodiment of the invention.

[0016] **FIG. 3***a* illustrates an exemplary physical layer protocol data unit, which may be utilized in connection with an embodiment of the invention.

[0017] **FIG. 3***b* illustrates an exemplary data field in a PPDU, which may be utilized in connection with an embodiment of the invention.

[0018] **FIG. 4***a* shows exemplary training fields and header fields for mixed mode access in accordance with a TGn Sync proposal that may be utilized in connection with an embodiment of the invention.

[0019] **FIG. 4***b* shows an exemplary L-SIG header field for mixed mode access in accordance with a TGn Sync proposal that may be utilized in connection with an embodiment of the invention.

[0020] **FIG. 4***c* shows an exemplary HT-SIG header field for mixed mode access in accordance with a TGn Sync proposal that may be utilized in connection with an embodiment of the invention.

[0021] **FIG. 5***a* shows exemplary training fields and header fields for greenfield access in accordance with a WWiSE proposal for $N_{ss}=2$, in accordance with an embodiment of the invention.

[0022] **FIG. 5***b* shows an exemplary Signal-N header field for greenfield access in accordance with a WWiSE proposal, in accordance with an embodiment of the invention.

[0023] **FIG. 5***c* shows exemplary training fields and header fields for greenfield access in accordance with a WWiSE proposal for $N_{ss}=4$, in accordance with an embodiment of the invention.

[0024] **FIG. 6***a* shows exemplary training fields and header fields with trailing signal field for greenfield access for $N_{ss}>2$, in accordance with an embodiment of the invention.

[0025] **FIG. 6***b* shows exemplary training fields and header fields with early signal field for greenfield access for $N_{ss}>2$, in accordance with an embodiment of the invention.

[0026] **FIG. 7** shows exemplary training fields and header fields for mixed mode access for $N_{ss}>2$, in accordance with an embodiment of the invention.

DETAILED DESCRIPTION OF THE INVENTION

[0027] Certain embodiments of the invention relate to a method and system for compromise greenfield preambles for 802.11n, which utilizes a channel sounding mechanism to communicate information between a transmitter and a receiver. Various embodiments of the invention may enable a greenfield access mode in IEEE 802.11n WLAN systems compared to an alternative approach that may not provide methods for greenfield access. The utilization of greenfield access may reduce the portion of time required to transmit data due to overhead comprising preamble fields and header fields. This may enable higher data throughput rates to be achieved. This may further enable more robust transmission of data by enabling comparable data rates to be maintained while reducing the coding rate of encoded transmitted data. The reduction of the coding rate may enable comparable data rates to be maintained for transmission via RF channels characterized by lower SNR while still achieving desired target levels of packet error rates.

[0028] In another embodiment of the invention, mixed mode access may be achieved while reducing a portion of time required for transmitting data due to overhead comprising preamble fields and header fields. Long training fields among a plurality of transmitted spatial streams may comprise orthonormal long training sequences, which may obviate tone interleaving. Utilizing orthonormal long training sequences may enable the transmission of identical symbols via a plurality of spatial streams.

[0029] **FIG. 1** is a block diagram of an exemplary system for wireless data communications, which may be utilized in accordance with an embodiment of the invention. With reference to **FIG. 1** there is shown a distribution system (DS) **110**, an extended service set (ESS) **120**, and an IEEE 802.x LAN **122**. The ESS **120** may comprise a first basic service set (BSS) **102**, and a second BSS **112**. The first BSS **102** may comprise a first 802.11 WLAN station **104**, a second 802.11 WLAN station **106**, and an access point (AP) **108**. The second BSS **112** may comprise a first 802.11 WLAN station **114**, a second 802.11 WLAN station **116**, and an access point (AP) **118**. The IEEE 802.x LAN **122** may comprise an 802.x LAN station **124**, and a portal **126**.

[0030] The BSS **102** or **112** may be part of an IEEE 802.11 WLAN that comprises at least 2 IEEE 802.11 WLAN stations, for example, the first 802.11 WLAN station **104**, the second 802.11 WLAN station **106**, and the AP **108**, which may be members of the BSS **102**. Non-AP stations within BSS **102**, the first 802.11 WLAN station **104**, and the second 802.11 WLAN station **106**, may individually form an association with the AP **108**. An AP, such as AP **108**, may be implemented as an Ethernet switch, bridge, or other device in a WLAN, for example. Similarly, non-AP stations within BSS **112**, the first 802.11 WLAN station **114**, and the second 802.11 WLAN station **116**, may individually form an association with the AP **118**. Once an association has been formed between a first 802.11 WLAN station **104** and an AP **108**, the AP **108** may communicate reachability information about the first 802.11 WLAN station **104** to other APs associated with the ESS **120**, such as AP **118**, and portals such as the portal **126**. In turn, the AP **118** may communicate reachability information about the first 802.11 WLAN station **104** to stations in BSS **112**. The portal **126**, which may be implemented as, for example, an Ethernet switch or other device in a LAN, may communicate reachability information about the first 802.11 WLAN station **104** to stations in LAN **122** such as the 802.x LAN station **124**. The communication of reachability information about the first 802.11 WLAN station **104** may enable WLAN stations that are not in BSS **102**, but are associated with ESS **120**, to communicate with the first 802.11 WLAN station **104**.

[0031] The DS **110** may provide an infrastructure which enables a first 802.11 WLAN station **104** in one BSS **102**, to communicate with a first 802.11 WLAN station **114** in another BSS **112**. The DS **110** may also enable a first 802.11 WLAN station **104** in one BSS **102** to communicate with an 802.x LAN station **124** in an IEEE 802.x LAN **122**, implemented as, for example a wired LAN. The AP **108**, AP **118**, or portal **126** may provide a means by which a station in a BSS **102**, BSS **112**, or LAN **122** may communicate information via the DS **110**. The first 802.11 WLAN station **104** in BSS **102** may communicate information to a first 802.11 WLAN station **114** in BSS **112** by transmitting the information to AP **108**, which may transmit the information via the DS **110** to AP **118**, which in turn may transmit the information to station **114** in BSS **112**. The first 802.11 WLAN station **104** may communicate information to the 802.x LAN station **124** in LAN **122** by transmitting the information to AP **108**, which may transmit the information via the DS **110** to the portal **126**, which in turn may transmit the information to the 802.x LAN station **124** in LAN **122**. The DS **110** may utilize wireless communications via an RF channel, wired communications, such as IEEE 802.x Ethernet, or a combination thereof.

[0032] The IEEE resolution 802.11n may enable WLAN devices compatible with IEEE 802.11in to also interoperate with IEEE 802.11 devices that are not compatible with IEEE 802.11n. WLAN devices that are compatible with IEEE 802.11 but are not compatible with IEEE 802.11 n may be referred to as legacy IEEE 802.11 WLAN devices. WLAN devices that are compatible with IEEE 802.11n and communicate with other IEEE 802.11n compatible WLAN devices in an IEEE basic service set (BSS) of which no legacy IEEE 802.11 WLAN devices are currently members may be capable of communicating in a greenfield access mode. When utilizing greenfield access, communications between the WLAN devices may utilize capabilities specified in IEEE 802.11n that may not be accessible to legacy WLAN devices. WLAN devices that are compatible with IEEE 802.11n, and that communicate with IEEE 802.11n compatible WLAN devices in an IEEE BSS, of which legacy IEEE 802.11 WLAN devices are currently members, may utilize mixed mode access. When utilizing mixed mode access, IEEE 802.11n compatible WLAN devices may utilize spoofing to avoid interference from legacy IEEE 802.11 WLAN devices during communications between IEEE 802.11n compatible devices in a BSS.

[0033] Among proposals received by TGn are proposals from, the worldwide spectrum efficiency (WWiSE) group,

and TGn Sync. Current proposals from TGn Sync may not provide a mechanism to support greenfield access. As such, mixed mode access communications based on current TGn Sync may be required to comprise information that may not be required in greenfield access communications.

[0034] The WWiSE proposals may comprise a plurality of enhancements to legacy IEEE 802.11 WLAN devices for incorporation in IEEE 802.11n WLAN devices. Legacy IEEE 802.11 WLAN devices may utilize 20 RF MHz channels. IEEE 802.11n may utilize 20 MHz channels, with an optional utilization of 40 RF MHz channels. Legacy IEEE 802.11 WLAN devices may utilize 52 sub-band frequencies, or subcarriers, in a 20 MHz channel, comprising pilot tones at 4 sub-band frequencies, and 48 data-bearing subcarriers. IEEE 802.11n WLAN devices based on WWiSE proposals may utilize a total of 56 subcarriers in a 20 MHz channel, comprising 2 pilot tones, and 54 data-bearing subcarriers. The subcarriers may be distributed symmetrically around a frequency that comprises the center frequency of a 20 MHz channel. The frequency spacing between subcarriers in an IEEE 802.11n WLAN device may be approximately equal to 312.5 KHz. Therefore, an IEEE 802.11n 20 MHz channel may comprise a plurality of subcarriers for which the frequency of a subcarrier, $f_{sc}(i)$, may be represented as:

$$f_{sc}(i)=f_{center}+i\Delta_f \text{ where,} \quad \text{equation[1]}$$

the frequency, f_{center}, may represent the center frequency in a 20 MHz channel, the frequency increment, Δ_f, may represent the frequency spacing between subcarriers, and the value of the subcarrier index, i, may comprise a plurality of integer values represented as:

$$0<i\leqq N_{sc}/2, \text{ or} \quad \text{equation[2a]}$$

$$-N_{sc}/2\leqq i<0, \text{ where} \quad \text{equation[2b]}$$

N_{sc} may represent the number of subcarriers present in a 20 MHz channel.

[0035] An IEEE 802.11n 40 MHz channel may comprise a plurality of subcarriers for which the frequency of a subcarrier $f^{40}_{sc}(i)$ may be represented as:

$$f_{sc}^{40}(i)=f_{primary}+i\Delta_f, \text{ or} \quad \text{equation[3a]}$$

$$f_{sc}^{40}(i)=f_{secondary}+i\Delta_f, \text{ where} \quad \text{equation[3b]}$$

$f_{primary}$ may represent the center frequency of a primary 20 MHz channel, $f_{secondary}$ may represent the center frequency of a secondary 20 MHz channel, and the index, i, may be as defined in equations [3a and [3b]. The primary and secondary 20 MHz channels may be adjacent channels such that:

$$f_{secondary}=f_{primary}\pm 20 \text{ MHz, where} \quad \text{equation[4]}$$

the secondary 20 MHz channel may be located at an adjacent channel for which the center frequency $f_{secondary}$ is either 20 MHz higher or 20 MHz lower than the center frequency of the primary 20 MHz channel $f_{primary}$. A 40 MHz channel may comprise a plurality of N_{sc} subcarriers located at the primary 20 MHz channel, and subsequent plurality of N_{sc} subcarriers located at the secondary 20 MHz channel, where N_{sc} may represent the number of subcarriers in a 20 MHz channel. In this regard, a 40 MHz channel may comprise a total of $2N_{sc}$ subcarriers. The state of the secondary 20 MHz channel may not be evaluated during communications between IEEE 802.11n WLAN devices.

[0036] The WWiSE proposals may incorporate a plurality of MIMO antenna configurations represented as $N_{TX}\times N_{RX}$, where N_{TX} may represent the number of transmitting antenna at a station. Transmitting antennas may be utilized to transmit signals via an RF channel. N_{RX} may represent the number of receiving antenna at a station that receives the signals transmitted by the N_{TX} transmitting antenna. The MIMO antenna configuration may enable IEEE 802.11n WLAN devices to achieve higher data rates than legacy IEEE 802.11 WLAN devices. A legacy 802.11 WLAN device may achieve data rates of 54 Mbits/s based on IEEE 802.11a specifications. By comparison, an IEEE 802.11n WLAN device may achieve data rates of 540 Mbits/s in a 4×4 MIMO configuration.

[0037] **FIG. 2***a* is an exemplary block diagram of a transceiver which may be utilized in accordance with an embodiment of the invention. With reference to **FIG. 2***a* is shown a baseband processor **272**, a transceiver **274**, an RF front end **280**, a plurality of receive antennas **276***a*, . . . , **276***n*, and a plurality of transmitting antennas **278***a*, . . . , **278***n*. The transceiver **274** may comprise a processor **282**, a receiver **284**, and a transmitter **286**.

[0038] The processor **282** may be adapted to perform digital receiver and/or transmitter functions in accordance with applicable communications standards. These functions may comprise, but are not limited to, tasks performed at lower layers in a relevant protocol reference model. These tasks may further comprise the physical layer convergence procedure (PLCP), physical medium dependent (PMD) functions, and associated layer management functions. The baseband processor **272** may be adapted to perform functions in accordance with applicable communications standards. These functions may comprise, but are not limited to, tasks related to analysis of data received via the receiver **284**, and tasks related to generating data to be transmitted via the transmitter **286**. These tasks may further comprise medium access control (MAC) layer functions as specified by pertinent standards.

[0039] The receiver **284** may be adapted to perform digital receiver functions that may comprise, but are not limited to, fast Fourier transform processing, beamforming processing, equalization, demapping, demodulation control, deinterleaving, depuncture, and decoding. The transmitter **286** may perform digital transmitter functions that comprise, but are not limited to, coding, puncture, interleaving, mapping, modulation control, inverse fast Fourier transform processing, beamforming processing. The RF front end **280** may receive analog RF signals via antennas **276***a*, . . . , **276***n*, converting the RF signal to baseband and generating a digital equivalent of the received analog baseband signal. The digital representation may be a complex quantity comprising I and Q components. The RF front end **280** may also transmit analog RF signals via an antenna **278***a*, . . . , **278***n*, converting a digital baseband signal to an analog RF signal.

[0040] In operation, the processor **282** may receive data from the receiver **284**. The processor **282** may communicate received data to the baseband processor **272** for analysis and further processing. The baseband processor **272** may generate data to be transmitted via an RF channel by the transmitter **286**. The baseband processor **272** may communicate the data to the processor **282**. The processor **282** may generate a plurality of bits that are communicated to the receiver **284**.

[0041] **FIG. 2***b* is an exemplary block diagram of a transmitter and a receiver in a MIMO system, which may be utilized in accordance with an embodiment of the invention. With reference to **FIG. 2***b* is shown a transmitter **200** a receiver **201**, a processor **240**, a baseband processor **242**, a plurality of transmitter antennas **215***a*, . . . , **215***n*, and a plurality of receiver antennas **217***a*, . . . , **217***n*. The transmitter **200** may comprise a coding block **202**, a puncture block **204**, an interleaver block **206**, a plurality of mapper blocks **208***a*, . . . , **208***n*, a plurality of inverse fast Fourier transform (IFFT) blocks **210***a*, . . . , **210***n*, a beamforming V matrix block **212**, and a plurality of digital to analog (D/A) conversion and antenna front end blocks **214***a*, . . . , **214***n*. The receiver **201** may comprise a plurality of antenna front end and analog to digital (A/D) conversion blocks **216***a*, . . . , **216***n*, a beamforming U matrix block **218**, a plurality of fast Fourier transform (FFT) blocks **220***a*, . . . , **220***n*, a channel estimates block **222**, an equalizer block **224**, a plurality of demapper blocks **226***a*, . . . , **226***n*, a deinterleaver block **228**, a depuncture block **230**, and a Viterbi decoder block **232**.

[0042] The variables V and U in beamforming blocks **212** and **218** respectively refer to matrices utilized in the beamforming technique. U.S. application Ser. No. 11/052,389 filed Feb. 7, 2005, provides a detailed description of Eigen beamforming and is hereby incorporated herein by reference in its entirety.

[0043] The processor **240** may perform digital receiver and/or transmitter functions in accordance with applicable communications standards. These functions may comprise, but are not limited to; tasks performed at lower layers in a relevant protocol reference model. These tasks may further comprise the physical layer convergence procedure (PLCP), physical medium dependent (PMD) functions, and associated layer management functions. The baseband processor **242** may similarly perform functions in accordance with applicable communications standards. These functions may comprise, but are not limited to, tasks related to analysis of data received via the receiver **201**, and tasks related to generating data to be transmitted via the transmitter **200**. These tasks may further comprise medium access control (MAC) layer functions as specified by pertinent standards.

[0044] In the transmitter **200**, the coding block **202** may transform received binary input data blocks by applying a forward error correction (FEC) technique such as, for example, binary convolutional coding (BCC). The application of FEC techniques, also known as "channel coding", may improve the ability to successfully recover transmitted data at a receiver by appending redundant information to the input data prior to transmission via an RF channel. The ratio of the number of bits in the binary input data block to the number of bits in the transformed data block may be known as the "coding rate". The coding rate may be specified using the notation i_b/t_b, where t_b represents the total number of bits that comprise a coding group of bits, while i_b represents the number of information bits that are contained in the group of bits t_b. Any number of bits t_b-i_b may represent redundant bits that may enable the receiver **201** to detect and correct errors introduced during transmission. Increasing the number of redundant bits may enable greater capabilities at the receiver to detect and correct errors in information bits. The penalty for this additional error detection and correction capability may result in a reduction in the information transfer rates between the transmitter **200** and the receiver **201**. The invention is not limited to BCC and a plurality of coding techniques such as, for example, Turbo coding, or low density parity check (LDPC) coding may also be utilized.

[0045] The puncture block **204** may receive transformed binary input data blocks from the coding block **202** and alter the coding rate by removing redundant bits from the received transformed binary input data blocks. For example, if the coding block **202** implemented a ½ coding rate, 4 bits of data received from the coding block **202** may comprise 2 information bits, and 2 redundant bits. By eliminating 1 of the redundant bits in the group of 4 bits, the puncture block **204** may adapt the coding rate from ½ to ⅔. The interleaver block **206** may rearrange bits received in a coding rate-adapted data block from the puncture block **204** prior to transmission via an RF channel to reduce the probability of uncorrectable corruption of data due to burst of errors, impacting contiguous bits, during transmission via an RF channel. The output from the interleaver block **206**, may also be divided into a plurality of streams where each stream may comprise a non-overlapping portion of the bits from the received coding rate-adapted data block. Therefore, for a given number of bits in the coding rate-adapted data block, b_{db}, a given number of streams from the interleaver block **206**, n_{st}, and a given number of bits assigned to an individual stream i by the interleaver block **206**, $b_{st}(i)$:

$$b_{db} = \sum_{i=1}^{n_{st}} b_{st}(i) \qquad \text{equation [5]}$$

[0046] The plurality of mapper blocks **208***a*, . . . , **208***n* may comprise a number of individual mapper blocks that is equal to the number of individual streams generated by the interleaver block **206**. Each individual mapper block **208***a*, . . . , **208***n* may receive a plurality of bits from a corresponding individual stream, mapping those bits into a "symbol" by applying a modulation technique based on a "constellation" utilized to transform the plurality of bits into a signal level representing the symbol. The representation of the symbol may be a complex quantity comprising in-phase (I) and quadrature (Q) components. The mapper block **208***a*. . . **208***n* for stream i may utilize a modulation technique to map a plurality of bits, $b_{st}(i)$, into a symbol.

[0047] The beamforming V matrix block **212** may apply the beamforming technique to the plurality of symbols, or "spatial modes", generated from the plurality of mapper blocks **208***a*, . . . , **208***n*. The beamforming V matrix block **212** may generate a plurality of signals where the number of signals generated may be equal to the number of transmitting antenna at the transmitter **200**. Each signal in the plurality of signals generated by the beamforming V block **212** may comprise a weighted sum of at least one of the received symbols from the mapper blocks **208***a*, . . . , **208***n*.

[0048] The plurality of IFFT blocks **210***a*, . . . , **210***n* may receive a plurality of signals from the beamforming block **212**. Each IFFT block **210***a*, . . . , **210***n* may subdivide the bandwidth of the RF channel into a plurality of n sub-band frequencies to implement orthogonal frequency division multiplexing (OFDM), buffering a plurality of received signals. Each buffered signal may be modulated by a carrier

signal whose frequency is based on of one of the sub-bands. Each of the IFFT blocks **210***a*, . . . , **210***n* may then independently sum their respective buffered and modulated signals across the frequency sub-bands to perform an n-point IFFT, thereby generating a composite OFDM signal.

[**0049**] The plurality of digital (D) to analog (A) conversion and antenna front end blocks **214***a*, . . . , **214***n* may receive the plurality of signals generated by the plurality of IFFT blocks **210***a*, . . . , **210***n*. The digital signal representation received from each of the plurality of IFFT blocks **210***a*, . . . , **210***n* may be converted to an analog RF signal that may be amplified and transmitted via an antenna. The plurality of D to A conversion and antenna front end blocks **214***a*, . . . , **214***n* may be equal to the number of transmitting antenna **115***a*, . . . , **115***n* at the transmitter **200**. Each D to A conversion and antenna front end block **214***a*, . . . , **214***n* may receive one of the plurality of signals from the beamforming V matrix block **212** and may utilize an antenna **115***a*, . . . , **115***n* to transmit one RF signal via an RF channel.

[**0050**] In the receiver **201**, the plurality antenna front end and A to D conversion blocks **216***a*, . . . , **216***n* may receive analog RF signals via an antenna, converting the RF signal to baseband and generating a digital equivalent of the received analog baseband signal. The digital representation may be a complex quantity comprising I and Q components. The number of antenna front end and A to D conversion blocks **216***a*, . . . , **216***n* may be equal to the number of receiving antenna **117***a*, . . . , **117***n* at the receiver **201**.

[**0051**] The plurality of FFT blocks **220***a*, . . . , **220***n* may receive a plurality of signals from the plurality of antenna front end and A to D conversion blocks **216***a*, . . . , **216***n*. The plurality of FFT blocks **220***a*, . . . , **220***n* may be equal to the number of antenna front end and A to D conversion blocks **216***a*, . . . , **216***n*. Each FFT block **220***a*, . . . , **220***n* may receive a signal from an antenna front end and A to D conversion block **216***a*, . . . , **216***n*, independently applying an n-point FFT technique, demodulating the signal by a plurality of carrier signals based on the n sub-band frequencies utilized in the transmitter **200**. The demodulated signals may be mathematically integrated over one sub band frequency period by each of the plurality of FFT blocks **220***a*, . . . , **220***n* to extract n symbols contained in each of the plurality of OFDM signals received by the receiver **201**.

[**0052**] The beamforming U* block **218** may apply the beamforming technique to the plurality of signals received from the plurality of FFT blocks **220***a*, . . . , **220***n*. The beamforming U* block **218** may generate a plurality of signals where the number of signals generated may be equal to the number of streams utilized in generating the signals at the transmitter **200**. Each of the plurality of signals generated by the beamforming U* block **218** may comprise a weighted sum of at least one of the signals received from the FFT blocks **220***a*, . . . , **220***n*.

[**0053**] The channel estimates block **222** may utilize preamble information contained in a received RF signal to compute channel estimates. The plurality of equalizer block **224** may receive signals generated by the beamforming U* block **218**. The equalizer block **224** may process the received signals based on input from the channel estimates block **222** to recover the symbol originally generated by the transmitter **200**. The equalizer block **224** may comprise suitable logic, circuitry, and/or code that may be adapted to transform symbols received from the beamforming U* block to compensate for fading in the RF channel.

[**0054**] The plurality of demapper blocks **226***a* . . . **226***n* may receive symbols from the plurality of equalizer blocks **224***a* . . . **224***n*, reverse mapping each symbol to a plurality of bits by applying a demodulation technique, based on the modulation technique utilized in generating the symbol at the transmitter **200**, to transform the symbol into a plurality of bits. The plurality of demapper blocks **226***a* . . . **226***n* may be equal to the number of equalizer blocks **224***a* . . . **224***n*, which may also be equal to the number of streams in the transmitter **200**.

[**0055**] The deinterleaver block **228** may receive a plurality of bits from each of the demapper blocks **226***a* . . . **226***n*, rearranging the order of bits among the received plurality of bits. The deinterleaver block **228** may rearrange the order of bits from the plurality of demapper blocks **226***a* . . . **226***n* in, for example, the reverse order of that utilized by the interleaver **206** in the transmitter **200**. The depuncture block **230** may insert "null" bits into the output data block received from the deinterleaver block **228** that were removed by the puncture block **204**. The Viterbi decoder block **232** may decode a depunctured output data block, applying a decoding technique that may recover the binary data blocks that were input to the coding block **202**.

[**0056**] In operation, the processor **240** may receive decoded data from the Viterbi decoder **232**. The processor **240** may communicate received data to the baseband processor **242** for analysis and further processing. The processor **240** may also communicate data received via the RF channel, by the receiver **201**, to the channel estimates block **222**. This information may be utilized by the channel estimates block **222**, in the receiver **201**, to compute channel estimates for a received RF channel. The baseband processor **242** may generate data to be transmitted via an RF channel by the transmitter **200**. The baseband processor **242** may communicate the data to the processor **240**. The processor **240** may generate a plurality of bits that are communicated to the coding block **202**.

[**0057**] The elements shown in **FIG. 2***b* may comprise components that may be present in an exemplary embodiment of a wireless communications terminal. One exemplary embodiment of a may be a wireless communications transmitter comprising a transmitter **200**, a processor **240**, and a baseband processor **242**. Another exemplary embodiment of a may be a wireless communications receiver comprising a receiver **201**, a processor **240**, and a baseband processor **242**. Another exemplary embodiment of a may be a wireless communications transceiver comprising a transmitter **200**, a receiver **201**, a processor **240**, and a baseband processor **242**.

[**0058**] Various embodiments of a MIMO system in an $N_{TX} \times N_{RX}$ antenna configuration may comprise a plurality of N_{TX} digital to analog conversion and antenna front end blocks **214***a* . . . **214***n*, and a plurality of N_{RX} antenna front end and analog to digital conversion blocks **216***a* . . . **216***n*.

[**0059**] **FIG. 3***a* illustrates an exemplary physical layer protocol data unit, which may be utilized in connection with an embodiment of the invention. With reference to **FIG. 3***a* there is shown a physical layer convergence protocol (PLCP) preamble field **302**, a PLCP header field **304**, and a

data field **306**. The preamble field **302** may be utilized by a receiver **201** in connection with the reception of signals via an RF channel. The header field **304** may comprise information that is utilized by a receiver **201** in connection with the processing of information in the data field **306**. The data field **306** may comprise information that is transmitted by a transmitter **200** and received by a receiver **201**.

[**0060**] **FIG. 3***b* illustrates an exemplary data field in a PPDU, which may be utilized in connection with an embodiment of the invention. With reference to **FIG. 3***b* there is shown a physical layer service data unit (PSDU) field **352**, a tail field **354**, and a pad field **356**. In an exemplary data field, as shown in **FIG. 3***b*, the PSDU may comprise a media access control (MAC) layer frame received from the MAC layer in the IEEE 802.11 protocol stack. In an exemplary PPDU, as shown in **FIG. 3***a*, the data field **306** may comprise 1,500 octets of binary data. The tail field **354** may comprise a plurality of bits, the number of which may depend upon the methods utilized to process the PSDU. The pad field **356** may comprise a plurality of bits, the number of which may depend upon a desired number of bits to be comprised in the data field.

[**0061**] **FIG. 4***a* shows exemplary training fields and header fields for mixed mode access in accordance with a TGn Sync proposal that may be utilized in connection with an embodiment of the invention. With reference to **FIG. 4***a* there is shown a plurality of PPDU preambles and headers **402**, **422**, and **442**. The preamble and header **402** may comprise a legacy short training field (L-STF) **404**, a legacy long training field (L-LTF) **406**, a legacy signal field (L-SIG) **408**, a high throughput signal field (HT-SIG) **410**, a high throughput short training field for the first spatial stream ($HT\text{-}STF_1$) **412**, and a plurality of high throughput long training fields for the first spatial stream comprising training fields number **1** through N ($HT\text{-}LTF_{1,1}$ . . . $HT\text{-}LTF_{1,N}$) **414** . . . **416**. The integer value N may represent the number of long training fields contained in the preamble and header **402**.

[**0062**] Each of the legacy short training fields, L-STF **404**, **424**, and **444** may be approximately 8 μs in duration, or equivalent in time duration to 2 IEEE 802.11n OFDM symbols and corresponding guard interval times, where each symbol and guard interval may be of approximately 4 μs in duration. Each of the long training fields, L-LTF **406**, **426**, and **446** may be approximately 8 μs in duration, or equivalent in time duration to 2 IEEE 802.11n OFDM symbols and corresponding guard intervals. Each of the signal fields L-SIG **408**, **428**, and **448** may be approximately 4 μs in duration, or equivalent in time duration to 1 IEEE 802.11n OFDM symbol and corresponding guard interval. Each of the high throughput HT-SIG fields **410**, **430**, and **450** may be approximately 8 μs in duration, or equivalent in time duration to 2 IEEE 802.11n OFDM symbols and corresponding guard intervals. Each of the HT-STF fields **412**, **432**, and **452** may be approximately 2.4 μs in duration. Each of the plurality of $HT\text{-}LTF_{1,1}$ . . . $HT\text{-}LTF_{1,N}$, $HT\text{-}LTF_{2,1}$ . . . $HT\text{-}LTF_{2,N}$, . . . , $HT\text{-}LTF_{NSS,1}$ . . . $HT\text{-}LTF_{NSS,N}$ fields **414** . . . **416**, **434** . . . **436**, . . . , **454** . . . **456** may be approximately 7.2 μs in duration.

[**0063**] The preamble and header **422** may comprise a legacy short training field **424**, a legacy long training field **426**, a legacy signal field **428**, a high throughput signal field **430**, a high throughput short training field for the second spatial stream **432**, and a plurality of high throughput long training fields for the second spatial stream comprising training fields number 1 through N **434** . . . **436**. The preamble and header **442** may comprise a legacy short training field **444**, a legacy long training field **446**, a legacy signal field **448**, a high throughput signal field **450**, a high throughput short training field for spatial stream number N_{SS} **452**, and a plurality of high throughput long training fields for spatial stream number N_{SS} comprising training sequence fields number 1 through N **454** . . . **456**.

[**0064**] In operation, the integer value N_{SS} may represent the number of spatial streams transmitted from a plurality of N_{TX} antennas located at a WLAN station. The number long training fields, N, may be approximately equal to the number of spatial streams N_{SS}. The training field L-STF **424** may represent a time shifted version of the training field L-STF **404** based on a method such as cyclical diversity delay (CDD). The training field L-STF **444** may represent a CDD version of the training field L-STF **424**. The training field L-LTF **426** may represent a CDD version of the training field L-LTF **406**. The training field L-LTF **446** may represent a CDD version of the training field L-LTF **426**. The signal field L-SIG **428** may represent a CDD version of the signal field L-SIG **408**. The signal field L-SIG **448** may represent a CDD version of the signal field L-SIG **428**. The signal field HT-SIG **430** may represent a CDD version of the signal field HT-SIG **410**. The signal field HT-SIG **450** may represent a CDD version of the signal field HT-SIG **430**.

[**0065**] The plurality of high throughput short training fields comprising $HT\text{-}STF_1$ **412**, $HT\text{-}STF_2$ **432**, and $HT\text{-}STF_{NSS}$ **452** may utilize tone interleaving. In the tone interleaving procedure, a plurality of N_{TI} frequencies, or tones, from among the plurality of subcarrier frequencies within a 20 MHz or 40 MHz RF channel, may be utilized for transmission within a given training field, for example, the high throughput short training field **412**, **432**, or **452** transmitted via each of a plurality of N_{SS} spatial streams. Tones may be interleaved by dividing the plurality N_{TI} tones into a plurality of tone groups each comprising a plurality N_{TI}/N_{SS} tones such that no tone group comprises a tone whose frequency is approximately equal to the frequency of a tone in another tone group. The $HT\text{-}STF_1$ may utilize tones from the first tone group, the $HT\text{-}STF_2$ may utilize tones from the second tone group, and so forth. Similarly, the plurality of long training fields $HT\text{-}LTF_{1,1}$ **414**, $HT\text{-}LTF_{2,1}$ **434**, and $HT\text{-}LTF_{NSS,1}$ **454**, may utilize tone interleaving. The plurality of long training fields $HT\text{-}LTF_{1,N}$ **416**, $HT\text{-}LTF_{2,N}$ **436**, and $HT\text{-}LTF_{NSS,N}$ **456**, may utilize tone interleaving.

[**0066**] **FIG. 4***b* shows an exemplary L-SIG header field for mixed mode access in accordance with a TGn Sync proposal that may be utilized in connection with an embodiment of the invention. With reference to **FIG. 4***b*, there is shown a L-SIG header **462**. The L-SIG header **462** may comprise a rate field **464**, a reserve field **466**, a length field **468**, a parity field **470**, and a tail field **472**. The L-SIG header **462** may comprise 24 bits of binary information. The rate field **464** may comprise 4 bits of binary information. The reserve field **466** may comprise 1 bit of binary information. The length field **468** may comprise 12 bits of binary infor-

mation. The parity field **470** may comprise 1 bit of binary information. The tail field **472** may comprise 6 bits of binary information.

[**0067**] **FIG. 4***c* shows an exemplary HT-SIG header field for mixed mode access in accordance with a TGn Sync proposal that may be utilized in connection with an embodiment of the invention. With reference to **FIG. 4***c,* there is shown an HT-SIG header field **476**. The HT-SIG header may comprise a length field **478**, a modulation and coding scheme (MCS) field **480**, an advanced coding field **482**, a reserved field **483**, a sounding packet field **484**, a number of HT-LTF field **486**, a short guard interval (GI) field **488**, an aggregation field **490**, a scrambler initialization field **492**, a 20 MHz or 40 MHz bandwidth (BW) field **494**, a cyclical redundancy check field **496**, and a tail field **498**. The length field **478** may comprise 18 bits of binary information. The length field **478** may indicate the number of octets of binary information that is contained in the physical layer service data unit (PSDU) field **352** in the corresponding physical layer protocol data unit (PPDU). The MCS field **480** may comprise 6 bits of binary information. The MCS field **480** may indicate the modulation type and coding rate being utilized in the coding of the corresponding PPDU. The advanced coding field **482** may comprise 1 bit of binary information. The advanced coding field **482** may indicate whether binary convolutional coding (BCC), or low density parity check (LDPC) coding is utilized in the coding of the corresponding PPDU. The reserved field **483** may comprise 1 bit of binary information. The reserved field **483** may comprise no assigned utilization.

[**0068**] The sounding packet field **484** may comprise, for example, 1 bit of binary information. The sounding packet field **484** may indicate whether the corresponding PSDU may be utilized for closed loop calibration between a transmitter and a receiver. The number of HT-LTF field **486** may comprise 2 bits of binary information. The number of HT-LTF field **486** may indicate the number of high throughput long training fields contained in the corresponding PPDU. The short GI field **488** may comprise 1 bit of binary information. The short GI field **488** may indicate the length of the guard interval utilized when transmitting the data field **206** in the corresponding PPDU. The aggregation field **490** may comprise 1 bit of binary information. The aggregation field **490** may indicate whether the data field **306** in the corresponding PPDU comprises the last portion of a message. The scrambler init field **492** may comprise 2 bits of binary information. The scrambler init field **492** may be utilized to initialize a scrambler function at the WLAN station receiving the PPDU. The 20 MHz or 40 MHz bandwidth field **494** may comprise 1 bit of binary information. The 20 MHz or 40 MHz bandwidth field **494** may indicate whether the PPDU was transmitted utilizing a 20 MHz RF channel, or a 40 MHz RF channel. The CRC field **496** may comprise 8 bits of binary information. The CRC field **496** may be utilized for detecting and/or correcting errors in a received corresponding PPDU. The tail field **498** may comprise 6 bits of binary information. The tail field **498** may be utilized to extend the number of binary bits contained in an HT-SIG field to a desired length.

[**0069**] In an exemplary PPDU comprising 1,500 binary octets of data **306** (**FIG. 3***a*), the data may comprise a time period of approximately 13 IEEE 802.11n OFDM symbols and corresponding guard bands in duration. This may be based on transmitting at a data rate of 243 Mbits/s while utilizing 2 spatial streams, 40 MHz bandwidth, 64 QAM modulation type, and a coding rate of ¾. Each OFDM symbol per spatial stream may comprise 486 bits of binary information for a combined 972 bits for the simultaneously transmitted OFDM symbols among the 2 spatial streams. The number of binary bits contained in an OFDM symbol, N_{DBPS}, may be determined based on:

$$N_{DBPS}=N_{DSC}*N_B(CON)*R, \text{ where} \qquad \text{equation[6]}$$

N_{DSC}, may represent the number of data bearing subcarriers in an RF channel, N_B(CON) may represent the number of binary bits/symbol based on the modulation type, and R may represent the coding rate. For a 40 MHz RF channel, N_{DSC} may be approximately equal to 108. For a modulation type of 64 QAM, a symbol may comprise 6 binary bits. The total number of bits simultaneously transmitted via N_{SS} number of spatial streams may equal approximately $N_{SS}\times N_{DBPS}$.

[**0070**] Data **306** comprising 1,500 binary octets may comprise a time duration of approximately 13 OFDM symbols and corresponding guard bands. In the PPDU preamble and header **402**, legacy preamble, comprising the training fields L-STF **404**, and L-LTF **406**, and the signal field L-SIG **408**, may comprise a time duration of approximately 5 OFDM symbols and corresponding guard bands. In the PPDU preamble and header **402**, high throughput preamble and header, comprising the signal field HT-SIG **412**, and training fields L-LTF **414** and L-LTF **416**, may comprise a time duration of approximately 6 OFDM symbols and corresponding guard bands. The number of HT long training fields, N, may be equal to 2, for example.

[**0071**] A preamble and header **402**, and data **306** comprising 1,500 binary octets, may produce a PPDU comprising a total time duration of approximately 24 OFDM symbols and corresponding guard bands in duration. Given a time duration of 4 μs for each OFDM symbol and corresponding guard band, the total time duration may be approximately 96 μs. Thus, the average data rate may be approximately equal to 1,500 binary octets, or 12,000 binary bits per 96 μs, or approximately 125 Mbits/s. Approximately 54% of the total duration may consist of data **306**. Approximately 21% of the total duration may comprise legacy preamble. Approximately 25% of the total duration may comprise high throughput preamble and header.

[**0072**] Elimination of the legacy preamble from the preamble and header **402** may enable an increase in data rate efficiency based on a data field **306** comprising 1,500 binary octets. In this case, the average data rate may be approximately 12,000 binary bits per 76 μs, or approximately 158 Mbits/s, which is an increase of approximately 26% in the data rate.

[**0073**] If the modulation type were 64 QAM with the coding rate were decreased from ¾ to ⅔, each OFDM symbol may comprise 432 binary bits information. In this case, data comprising 1,500 binary octets may comprise a time duration of approximately 14 OFDM symbols and corresponding guard bands. Elimination of the legacy preamble from the preamble header **402** may produce an average data rate of approximately 12,000 binary bits per 80 μs, or approximately 150 Mbits/s, which is an increase of approximately 20% in the data rate.

[**0074**] If the modulation type were 64 QAM with the coding rate were decreased from ¾ to ½, each OFDM

symbol may comprise 424 binary bits information. In this case, data comprising 1,500 binary octets may comprise a time duration of approximately 19 OFDM symbols and corresponding guard bands. Elimination of the legacy preamble from the preamble header **402** may produce an average data rate of approximately 12,000 binary bits per 100 μs, or approximately 120 Mbits/s, which is a decrease of approximately 4% in data rate.

[**0075**] A consequence of the ability to achieve coding rate reduction while maintaining comparable or higher data rates as a result of the elimination of legacy preamble from a PPDU may enable those comparable data rates to be maintained at lower signal to noise ratios (SNR) than may be achievable when utilizing a PPDU preamble and header **402** that comprises legacy preamble. A coding rate reduction from ¾ to ⅔ due to the elimination of legacy preamble resulting in greenfield access may correspond to at least 2 dB lower SNR for which a comparable, or higher, data rate may be maintained in comparison to a legacy preamble for mixed mode access PPDU with the preamble and header **402**. This may be referred to as a greater than 2 dB performance gain for greenfield access relative to mixed mode access.

[**0076**] Utilization of LDPC coding to encode data **306** in a PPDU may produce a performance gain relative to the use of BCC coding. The performance gain realized from greenfield access may exceed that realized through the utilization of LDPC coding. Simulation results may show that LDPC provides a performance gain of 2 dB relative to BCC utilized as specified in IEEE 802.11a and in IEEE 802.11g. The utilization of LDPC may add some complexity to embodiments of the receiver **201**.

[**0077**] **FIG. 5***a* shows exemplary training fields and header fields for greenfield access in accordance with a WWiSE proposal for N_{SS}=2, in accordance with an embodiment of the invention. With reference to **FIG. 5***a*, there is shown training fields and header for a first spatial stream **502**, and training fields and header for a second spatial stream **512**. The training fields and header **502** may comprise a high throughput (HT) short training field for the first spatial stream (HT-ST_1) **504**, a HT long training field for the first spatial stream (HT-LT_1) **506**, and a Signal-N field for the first spatial stream (Signal-N_1) **508**. The training fields and header **512** may comprise a HT short training field for the second spatial stream (HT-ST_2) **514**, a HT long training field for the second spatial stream (HT-LT_2) **516**, and a Signal-N field for the second spatial stream (Signal-N_2) **518**.

[**0078**] In operation, a short training field may be utilized by a receiver for a plurality of reasons including, but not limited to, signal detection, automatic gain control (AGC) for low noise amplification circuitry, diversity selection performed by, for example, rake receiver circuitry, coarse frequency offset estimation, and timing synchronization. A long training field may be utilized by a receiver for a plurality of reasons, for example, fine frequency offset estimation, and channel estimation. The training field HT-ST_2 **514** may comprise a time shifted representation of the training field HT-ST_1 **504**. The training field HT-LT_2 **516** may comprise a time shifted representation of the training field HT-LT_1 **506**. The signal field Signal-N_2 **518** may comprise a time shifted representation of the signal field Signal-N_1 **508**. The training fields, HT-ST_1 **504** and HT-ST_2 **514**, may comprise a time duration of about 8 μs, and further comprise a plurality of OFDM symbols, for example, a plurality of 10 ODFM symbols. The training fields, HT-LT_1 **506** and HT-LT_2 **516**, may comprise a time duration of about 8 μs, and further comprise a plurality of OFDM symbols, for example, a plurality of 2 ODFM symbols. The signal fields, Signal-N_1 **508** and Signal-N_2 **518**, may comprise a time duration of about 4 μs, and further comprise an OFDM symbol.

[**0079**] **FIG. 5***b* shows an exemplary Signal-N header field for greenfield access in accordance with a WWiSE proposal, in accordance with an embodiment of the invention. With reference to **FIG. 5***b*, there is shown a Signal-N header **552**. The Signal-N header field may comprise a reserved field **554**, a number of spatial streams (N_{SS}) field **556**, a number of transmit antennas (NTX) field **558**, a BW field **560**, a coding rate (R) field **562**, an error correcting code type (CT) field **564**, a constellation type (CON) field **566**, a length field **568**, a last PSDU indicator (LPI) field **570**, a reserved field **572**, a CRC field **574**, and a tail field **576**. The reserved field **554** may comprise **6** bits of binary information. The reserved field **572** may comprise 8 bits of binary information. The reserved fields **554** and **572** may have no assigned usage. The N_{SS} field **556** may comprise 3 bits of binary information. The N_{SS} field **556** may indicate the number of spatial streams utilized in transmitting information from a transmitter, for example, transmitter **200**, and a receiver, for example receiver **201**. In a MIMO system, the number of spatial streams may represent a number, for example, 1, 2, 3, or 4. The NTX field **558** may comprise 3 bits of binary information. The NTX field **558** may indicate the number of transmitting antenna utilized in transmitting information between a transmitter and a receiver. In a MIMO system, the number of transmitting antenna may represent a number, for example, 1, 2, 3, or 4. The BW field **560** may comprise 2 bits of binary information. The BW field **560** may represent a bandwidth, for example, 20 MHz, or 40 MHz.

[**0080**] The R field **562** may comprise 3 bits of binary information. The R field **628** may indicate the coding rate that is utilized for transmitting a physical layer service data unit (PSDU) that is transmitted via an antenna. In a MIMO system, the coding rate may represent a number, for example, ½, ⅔, ¾, or ⅚. The CT field **564** may comprise 2 bits of binary information. The CT field **564** may indicate the error correcting code (ECC) type that is utilized in transmitting information via an antenna. In a MIMO system, the ECC type may represent an ECC method, for example, binary convolutional coding (BCC), or low density parity check coding (LDPC). The CON field **566** may comprise 3 bits of binary information. The CON field **566** may indicate the constellation type, or modulation type, which is utilized in transmitting a PSDU via an antenna. In a MIMO system, the modulation type may represent a constellation indicating the number of binary bits that may be encoded in a symbol, for example, binary phase shift keying (BPSK), quaternary phase shift keying (QPSK), 16 level quadrature amplitude modulation (16 QAM), 64 level QAM (64 QAM), or 256 level QAM (256 QAM).

[**0081**] The length field **568** may comprise 13 bits of binary information. The length field **568** may comprise information that indicates the number of binary octets of data payload information, for example, the physical layer service data unit (PSDU) **352**. The LPI field **570** may comprise 1 bit of binary information. The LPI field **570** may

comprise information that indicates whether the corresponding PSDU **352** represents the last information comprised in a message. The CRC field **574** may comprise 4 bits of binary information. The CRC field **574** may comprise information that may be utilized by a receiver, for example, receiver **201**, to detect the presence of errors in a received PPDU. The tail field **576** may comprise **6** bits of binary information. The tail field **576** may comprise information that is appended following the CRC field **574** to pad the Signal-N field to a desired length.

[**0082**] **FIG. 5***c* shows exemplary training fields and header fields for greenfield access in accordance with a WWiSE proposal for N_{SS}=4, in accordance with an embodiment of the invention. With reference to **FIG. 5***c*, there is shown training fields and a header field for a first spatial stream **503**, training fields and a header field for a second spatial stream **513**, training fields and a header field for a third spatial stream **522**, and training fields and a header field for a fourth spatial stream **532**.

[**0083**] The training fields and header field for the first spatial stream **503** may comprise a high throughput short training field HT-ST_1 **505**, a first HT long training field (HT-$LT_{1,1}$) **507**, a Signal-N_1 field **508**, and a second HT long training field (HT-$LT_{1,2}$) **510**. The training fields and header field for the second spatial stream **513** may comprise a high throughput short training field HT-ST_2 **515**, a first HT long training field (HT-$LT_{2,1}$) **517**, a Signal-N_2 field **518**, and a second HT long training field (HT-$LT_{2,2}$) **520**. The training fields and header field for the third spatial stream **522** may comprise a high throughput short training field HT-ST_3 **524**, a first HT long training field (HT-$LT_{3,1}$) **526**, a Signal-N_3 field **528**, and a second HT long training field (HT-$LT_{1,2}$) **530**. The training fields and header field for the fourth spatial stream **532** may comprise a high throughput short training field HT-ST_4 **534**, a first HT long training field (HT-$LT_{4,1}$) **536**, a Signal-N_4 field **538**, and a second HT long training field (HT-$LT_{4,2}$) **540**.

[**0084**] In operation, the training field HT-ST_2 **515** may comprise a time shifted representation of the training field HT-ST_1 **505**. The training field HT-ST_3 **524** may comprise a time shifted representation of the training field HT-ST_2 **515**. The training field HT-ST_4 **534** may comprise a time shifted representation of the training field HT-ST_3 **524**. The training field HT-$LT_{2,1}$ **517** may comprise a time shifted representation of the training field HT-$LT_{1,1}$ **507**. The training field HT-$LT_{3,1}$ **526** may comprise a time shifted representation of the training field HT-$LT_{2,1}$ **517**. The training field HT-$LT_{4,1}$ **536** may comprise a time shifted representation of the training field HT-$LT_{3,1}$ **526**. The signal field Signal-N_2 **518** may comprise a time shifted representation of the signal field Signal-N_1 **508**. The signal field Signal-N_3 **528** may comprise a time shifted representation of the signal field Signal-N_2 **518**. The signal field Signal-N_4 **538** may comprise a time shifted representation of the signal field Signal-N_3 **528**. The training field HT-$LT_{2,2}$ **520** may comprise a time shifted representation of the training field HT-$LT_{1,2}$ **510**. The training field HT-$LT_{3,2}$ **530** may comprise a time shifted representation of the training field HT-$LT_{2,2}$ **520**. The training field HT-$LT_{4,2}$ **540** may comprise a time shifted representation of the training field HT-$LT_{3,2}$ **530**.

[**0085**] The training fields, HT-ST_1 **505**, HT-ST_2 **515**, HT-ST_3 **524**, and HT-ST_4 **534**, may comprise a time duration of about 8 μs, and further comprise a plurality of OFDM symbols, for example, a plurality of 10 ODFM symbols. The training fields, HT-$LT_{1,1}$ **507**, HT-$LT_{1,2}$ **510**, HT-$LT_{2,1}$ **517**, HT-$LT_{2,2}$ **520**, HT-$LT_{3,1}$ **526**, HT-$LT_{3,2}$ **530**, HT-$LT_{4,1}$ **536**, and HT-$LT_{4,2}$ **540**, may comprise a time duration of about 8 μs, and further comprise a plurality of OFDM symbols, for example, a plurality of 2 ODFM symbols. The signal fields, Signal-N_1 **508** Signal-N_2 **518**, Signal-N_3 **528** and Signal-N_4 **538**, may comprise a time duration of about 4 μs, and further comprise an OFDM symbol.

[**0086**] Comparing **FIG. 5***a* and **FIG. 5***c*, the exemplary training fields and Signal-N header field illustrated in **FIG. 5***a*, based on 2 spatial streams, **502** and **512**, may each be of approximately 20 μs in duration, or equivalent in time duration to 5 IEEE 802.11n OFDM symbols and corresponding guard bands. The exemplary training fields and Signal-N header field illustrated in **FIG. 5***c*, based 4 spatial streams, **503**, **513**, **522**, and **532**, may each be of approximately 28 μs in duration, or equivalent in time duration to 7 IEEE 802.11n OFDM symbols and corresponding guard bands.

[**0087**] **FIG. 6***a* shows exemplary training fields and header fields with trailing signal field for greenfield access for N_{SS}>2, in accordance with an embodiment of the invention. With reference to **FIG. 6***a* there is shown training fields and a header field for a first spatial stream **602**, training fields and a header field for a second spatial stream **622**, and training fields and a header field for spatial stream N_{SS} **642**. The training fields and header field for the first spatial stream **602** may comprise a short training field HT-STF_1 field **604**, a long training field HT-$LTF_{1,1}$ field **606**, a plurality of subsequent long training fields HT-$LTF_{1,2}$ . . . HT-$LTF_{1,N}$ **608** . . . **610**, and a Signal*-N_1 field **612**. The training sequence and header field for the second spatial stream **622** may comprise an HT-STF_2 field **624**, an HT-$LTF_{2,1}$ field **626**, a plurality of HT-$LTF_{2,2}$ . . . HT-$LTF_{2,N}$ fields **628** . . . **630**, and a Signal*-N_2 field **632**. The training sequence and header field for spatial stream N_{SS} **642** may comprise an HT-STF_{NSS} field **644**, an HT-$LTF_{NSS,1}$ field **646**, a plurality of HT-$LTF_{NSS,2}$ . . . HT-$LTF_{NSS,N}$ fields **648** . . . **650**, and a Signal*-N_{NSS} field **652**. The Signal*-N fields **612**, **632**, and **652** may be represented as shown in **FIG. 4***c*.

[**0088**] In operation, the short training sequence utilized in the training field HT-STF_1 **604**, STS_1, may be represented as a vector comprising a plurality of coefficients. The short training sequence utilized in the training field HT-STF_2 **624**, STS_2, may be represented as a vector comprising a plurality of coefficients. The short training sequence utilized in the training field HT-STF_{NSS} **624**, STS_{NSS}, may be represented as a vector comprising a plurality of coefficients. Each vector representation among the plurality of vector representations STS_1 . . . STS_{NSS} may be orthonormal to each of the other vector representations in the plurality of vector representations.

[**0089**] The long training sequence utilized in the first training field of the first spatial stream, HT-$LTF_{1,1}$ **606**, $LTS_{1,1}$, may be represented as a vector comprising a plurality of coefficients. The long training sequence utilized in the first training field of the second spatial stream HT-$LTF_{2,1}$ **626**, $LTS_{2,1}$, may be represented as a vector comprising a plurality of coefficients. The long training sequence utilized in the first training field of spatial stream N_{SS} HT-$LTF_{NSS,1}$

646, $LTS_{NSS,1}$, may be represented as a vector comprising a plurality of coefficients. Each vector representation among the plurality of vector representations $LTS_{1,1}$ . . . $LTS_{NSS,1}$ may be orthonormal to each of the other vector representations in the plurality of vector representations.

[**0090**] The long training sequence utilized in the second training field of the first spatial stream HT-$LTF_{1,2}$ **608**, $LTS_{1,2}$, may be represented as a vector comprising a plurality of coefficients. The long training sequence utilized in the second training field of the second spatial stream HT-$LTF_{2,2}$ **628**, $LTS_{2,2,}$ may be represented as a vector comprising a plurality of coefficients. The long training sequence utilized in the second training field of spatial stream N_{SS} HT-$LTF_{NSS,2}$ **648**, $LTS_{NSS,2}$, may be represented as a vector comprising a plurality of coefficients. Each vector representation among the plurality of vector representations $LTS_{1,2}$ . . . $LTS_{NSS,2}$ may be orthonormal to each of the other vector representations in the plurality of vector representations.

[**0091**] The long training sequence utilized in the training field N of the first spatial stream HT-$LTF_{1,N}$ **610**, $LTS_{1,N}$, may be represented as a vector comprising a plurality of coefficients. The long training sequence utilized in the training field N of the second spatial stream HT-$LTF_{2,N}$ **630**, $LTS_{2,N,}$ may be represented as a vector comprising a plurality of coefficients. The long training sequence utilized in the training field N of spatial stream N_{SS} HT-$LTF_{NSS,N}$ **650**, $LTS_{NSS,N,}$ may be represented as a vector comprising a plurality of coefficients. Each vector representation among the plurality of vector representations $LTS_{1,N}$ . . . $LTS_{NSS,N}$ may be orthonormal to each of the other vector representations in the plurality of vector representations. The number of long training fields, N, may be approximately equal to the number of spatial streams, N_{SS}.

[**0092**] Orthonormality is a property of vectors such that for any two vectors, X and Y, the vector dot product of the vectors may equal zero. When applied to long training sequences, the property of orthonormality may result in the generation of long training sequences whose vector representations exhibit the property of orthonormality. The generation of an orthonormal long training sequence may produce phase shifts among the frequency subcarriers that comprise an OFDM symbol generated based on the long training sequence. The phase shifts may improve the quality of transmitted OFDM symbols by reducing the likelihood of accidental nulls in the beam pattern of the signals transmitted by a transmitter **200** (**FIG. 2***b*). The utilization of known phase shifts among the frequency subcarriers may enable a receiver **201** to remove the phase shifts in a received signal during channel estimation. The placement of the Signal*-N fields **612**, **632**, and **652** following the corresponding pluralities of long training sequence fields in each of the spatial streams may enable a receiver to utilize a full channel estimate, based on the preceding long training fields for each spatial stream, for example, long training sequence fields **606** and **608** . . . **610** in the first spatial stream, in detecting the corresponding Signal*-N field.

[**0093**] In MIMO systems, orthonormal sequences may enable a receiver **201** (**FIG. 1**) to more easily distinguish a signal transmitted from a specific transmitter antenna front end **214***a* . . . **214***n* at a transmitter **200**. A matched filter at receiver antenna front ends **216***a* . . . **216***n* at the receiver **201** may enable the receiver to receive a signal transmitted by a specific transmitter antenna front end **214***a* . . . **214***n* at a specific receiver antenna front end **216***a* . . . **216***n*.

[**0094**] The training fields, HT-STF_1 **604**, HT-STF_2 **624**, and HT-STF_{NSS} **644**, may comprise a time duration of about 8 μs, and further comprise a plurality of OFDM symbols, for example, a plurality of 10 ODFM symbols. The training fields, HT-$LTF_{1,1}$ **606**, HT-$LTF_{2,1}$ **626**, and HT-$LTF_{NSS,1}$ **646**, may comprise a time duration of about 8 μs, and further comprise a plurality of OFDM symbols, for example, a plurality of 2 ODFM symbols. The plurality of OFDM symbols in training field **606** may be identical. The plurality of OFDM symbols in training field **626** may be identical. The plurality of OFDM symbols in training field **646** may be identical. The pluralities of training fields, HT-$LTF_{1,2}$ . . . HT-$LTF_{1,N}$ **608** . . . **610**, HT-$LTF_{2,2}$ . . . HT-$LTF_{2,N}$ **628** . . . **630**, and HT-$LTF_{NSS,2}$ . . . HT-$LTF_{NSS,N}$ **648** . . . **650**, may comprise a time duration of about 4 μs, and further comprise an OFDM symbol. Utilizing orthonormal training sequences after the first long training sequence may obviate tone interleaving, which may be a desirable feature because the first long training sequence may utilize identical symbols. The signal fields, Signal*-N **612**, Signal*-N_2 **632**, and Signal*-N_{NSS} **652**, may comprise a time duration of about 8 μs, and further comprise a plurality of OFDM symbols, for example, a plurality of 2 OFDM symbols.

[**0095**] For N_{SS}=2 there may be a plurality of N=2 long training fields in exemplary training fields and header field **602**, **622**, or **642**. Referring to **FIG. 6***a* for the case of 2 transmitted spatial streams, the training fields and Signal*-N header field **602**, **622**, and **642** may comprise a time duration of about 28 μs, and further comprise a plurality of 7 IEEE 802.11n OFDM symbols. For the case of 3 transmitted spatial streams, the training fields and header field **602**, **622**, and **642** may comprise a time duration of about 32 μs, and further comprise a plurality of 8 IEEE 802.11n OFDM symbols. For the case of 4 transmitted spatial streams, the training fields and header field **602**, **622**, and **642** may comprise a time duration of about 36 μs, and further comprise a plurality of 9 IEEE 802.11n OFDM symbols.

[**0096**] Comparing the training fields and header field **402**, **422**, or **442** (**FIG. 4***a*) for mixed mode access in an IEEE 802.11n WLAN to comparable training fields and header field **602**, **622**, or **642** (**FIG. 6***a*) for greenfield access in an IEEE 802.11n WLAN for the case of 2 transmitted spatial streams may indicate that the training fields and header field **602**, **622**, or **642** may comprise a time duration that is approximately 16 μs shorter in duration than that of comparable training fields and header field **402**, **422**, or **442**. This may correspond to a reduction of 4 fewer IEEE 802.11n OFDM symbols transmitted with each physical layer protocol data unit (PPDU).

[**0097**] In various embodiments of the invention, as illustrated in the exemplary training fields and header field in **FIG. 6***a*, the Signal*-N field be represented as described in **FIG. 4***c*. The Signal*-N field may comprise a time duration of approximately 8 μs, and further comprise 2 OFDM symbols. Each of the first high throughput long training fields among the spatial streams, HT-$LTF_{1,1}$ **606**, HT-$LTF_{2,1}$ **626**, and HT-$LTF_{NSS,1}$ **646** may comprise a time duration of approximately 8 μs, and further comprise 2 OFDM symbols. Each of the first high throughput long training fields among the spatial streams, HT-$LTF_{1,1}$ **606**, HT-$LTF_{2,1}$ **626**, and

$HT\text{-}LTF_{NSS,1}$ **646** may comprise identical OFDM symbols that may be utilized for fine frequency offset estimation as may be specified in IEEE resolutions 802.11a, and 802.11g.

[0098] **FIG. 6***b* shows exemplary training fields and header fields with early signal field for greenfield access for $N_{SS}>2$, in accordance with an embodiment of the invention. **FIG. 6***b* differs from **FIG. 6***a* in that, in **FIG. 6***b,* a signal field may follow a first long training field in a spatial stream PDU, with one or more subsequent long training fields following the signal field. With reference to **FIG. 6***b* there is shown training fields and a header field for a first spatial stream **602***a,* training fields and a header field for a second spatial stream **622***a,* and training fields and a header field for spatial stream N_{SS} **642***a.* The training fields and header field for the first spatial stream **602***a* may comprise a short training field $HT\text{-}STF_1$ field **604***a,* a long training field $HT\text{-}LTF_{1,1}$ field **606***a,* a plurality of subsequent long training fields $HT\text{-}LTF_{1,2}$ . . . $HT\text{-}LTF_{1,N}$ **608***a* . . . **610***a,* and a Signal*-N, field **612***a.* The training sequence and header field for the second spatial stream **622***a* may comprise an $HT\text{-}STF_2$ field **624***a,* an $HT\text{-}LTF_{2,1}$ field **626***a,* a plurality of $HT\text{-}LTF_{2,2}$ . . . $HT\text{-}LTF_{2,N}$ fields **628***a* . . . **630***a,* and a Signal*-N_2 field **632***a.* The training sequence and header field for spatial stream N_{SS} **642***a* may comprise an $HT\text{-}STF_{NSS}$ field **644***a,* an $HT\text{-}LTF_{NSS,1}$ field **646***a,* a plurality of $HT\text{-}LTF_{NSS,2}$ . . . $HT\text{-}LTF_{NSS,N}$ fields **648***a* . . . **650***a,* and a Signal*-N_{NSS} field **652***a.*

[0099] Long training sequences may be utilized for generating OFDM symbols that may be transmitted during long training fields. Long training sequences for $N_{SS}=2$ may be defined as follows:

$$HT\text{-}LTF_{[i,j]} = \begin{bmatrix} .11aLT & .11aLT \\ -.11aLT * e^{j*theta(k)} & .11aLT * e^{j*theta(k)} \end{bmatrix} \quad \text{equation [7]}$$

where the index, i, may represent a row in the matrix, and the index, j, may represent a column. Each row may represent a corresponding spatial stream, with each column representing a corresponding long training sequence, .11a LT indicates that the training sequence may be based on specifications in IEEE 802.11a, theta(k) may indicate a phase shift in the LT field for OFDM subcarrier k in an RF channel where the phase shift may vary as a function of the index k.

$$.11aLT = \begin{Bmatrix} 1, 1, 1, 1, -1, -1, 1, 1, -1, 1, 1, 1, \\ 1, 1, 1, -1, -1, 1, 1, -1, 1, -1, 1, \\ 1, 1, 1, 0, 1, -1, -1, 1, 1, -1, 1, \\ -1, 1, -1, -1, -1, -1, -1, 1, 1, -1, \\ -1, 1, -1, 1, -1, 1, 1, 1, 1, -1, -1 \end{Bmatrix} \quad \text{equation [8]}$$

where the first element in equation[8] may represent $LS[-N_{SC}/2]$ and the last element may represent $LS[N_{SC}/2]$.

[0101] A long OFDM training symbol, $r_{LONG}(t)$, where the variable t may represent time, may be generated according to the equation:

$$r_{LONG}(t) = w_{TLONG}(t) \sum_{k=N_{SC}/2}^{N_{SC}/2} LS[k]\, e^{j2\pi 2\Delta_F (t-T_{GI2})} \quad \text{equation [9]}$$

where N_{SC} may represent the number of frequency subcarriers, Δ_f, may represent the frequency spacing between subcarriers, T_{GI2} may represent the training symbol guard band time interval, and $w_{TLONG}(t)$ may represent the timing window for the long training sequence. The timing window $w_{TLONG}(t)$ may be represented as:

$$w_T(nT_s) = \begin{Bmatrix} 1 & 1 \le n \le 79 \\ 0.5 & 0, 80 \\ 0 & \text{otherwise} \end{Bmatrix}, \text{where} \quad \text{equation [10]}$$

the sampling interval, T_S, may equal approximately 50 ns for a 20 MHz channel, and n may represent a sample of the OFDM signal as represented by equation[9] taken at a time $t=nT_S$ during a timing window interval for transmission of an OFDM symbol.

[0102] With reference to equation[9] for $N_{SS}=2$, substitution of a long training sequence element HT-LTF[i,j] from equation[7] for LS[k] in equation[9] may be utilized to generate an OFDM symbol for the jth long training field in the ith spatial stream. In the first long training field, the OFDM symbol generated by equation[9] may be transmitted twice.

[0103] The LT fields may be defined for $N_{SS}=3$ as follows:

$$HT\text{-}LTF[i,j] = \begin{bmatrix} .11aLT * W11 & .11aLT * W12 & .11aLT * W13 \\ .11aLT * W21 * e^{j*theta(k)} & .11aLT * W22 * e^{j*theta(k)} & .11aLT * W22 * e^{j*theta(k)} \\ .11aLT * W31 * e^{j*phi(k)} & .11aLT * W32 * e^{j*phi(k)} & .11aLT * W33 * e^{j*phi(k)} \end{bmatrix} \quad \text{equation [11]}$$

[0100] Individual elements in the long training sequence, .11aLT, based on IEEE 802.11a for a 20 MHz channel, may be represented utilizing the vector notation, LS[k], where k may comprise a range of integer values from and including $-N_{SC}/2$, up to and including $N_{SC}/2$. as:

where the index, i, may represent a row in the matrix, and the index, j, may represent a column. Each row may represent a corresponding spatial stream, with each column representing a corresponding long training sequence. W_{mn} may represent elements from a discrete Fourier transform

(DFT) matrix, and phi(k) indicates a phase shift in the LT field for OFDM subcarrier k where the phase shift varies as a function of k where phi(k) may not equal theta(k).

[0104] The DFT matrix, W_{mn}, may be represented as:

$$W_{mn} = \begin{bmatrix} 1 & 1 & 1 \\ 1 & \frac{-1-i\sqrt{3}}{2} & \frac{-1+i\sqrt{3}}{2} \\ 1 & \frac{-1+i\sqrt{3}}{2} & \frac{-1-i\sqrt{3}}{2} \end{bmatrix}, \text{ where} \qquad \text{equation [12]}$$

the index, m, may represent a row in the matrix, and the index, n, may indicate a column.

[0105] With reference to equation[9] for $N_{SS}=3$, substitution of a long training sequence element HT-LTF[i,j] from equation[11] for LS[k] in equation[9] may be utilized to generate an OFDM symbol for the jth long training field in the ith spatial stream. In the first long training field, the OFDM symbol generated by equation[9] may be transmitted twice.

[0106] The LT fields may be defined for N=4 as follows:

$$HT-LFT[i,j] = \begin{bmatrix} -1*.11aLT & .11aLT & .11aLT & .11aLT \\ .11aLT*e^{j*theta(k)} & -1*.11aLT*e^{j*theta(k)} & .11aLT*e^{j*theta(k)} & .11aLT*e^{j*theta(k)} \\ .11aLT*e^{j*phi(k)} & .11aLT*e^{j*phi(k)} & -1*.11aLT*e^{j*phi(k)} & .11aLT*e^{j*phi(k)} \\ .11aLT*e^{j*psi(k)} & .11aLT*e^{j*psi(k)} & .11aLT*e^{j*psi(k)} & -1*.11aLT*e^{j*psi(k)} \end{bmatrix} \qquad \text{equation [13]}$$

where the index, i, may represent a row in the matrix, and the index, j, may represent a column. Each row may represent a corresponding spatial stream, with each column representing a corresponding long training sequence. phi(k) indicates a phase shift in the LT field for OFDM subcarrier k where the phase shift varies as a function of k. psi(k) indicates a phase shift in the LT field for OFDM subcarrier k where the phase shift varies as a function of k. The phase shifts phi(k), theta(k), and psi(k) may not be equal.

[0107] With reference to equation[9] for $N_{SS}=4$, substitution of a long training sequence element HT-LTF[i,j] from equation[13] for LS[k] in equation[9] may be utilized to generate an OFDM symbol for the jth long training field in the ith spatial stream. In the first long training field, the OFDM symbol generated by equation[9] may be transmitted twice.

[0108] The long training sequence as represented in equation[8] may be utilized to generate a plurality of orthonormal long training sequences. Alternatively, orthonormal long training sequence fields may be generated. If the long training sequences in different long training sequence fields are orthonormal, the corresponding long training sequence fields may also be orthonormal. Orthonormal long training sequences or long training sequence fields may be generated by a plurality of methods. In one embodiment of the invention, orthonormal long training sequence fields may be generated by utilizing a discrete Fourier transform matrix to apply phase shifts to individual long training sequence fields among a plurality of long training sequence fields in a spatial stream. The utilization of a discrete Fourier transform matrix may enable the orthonormal generator sequence to be of minimum length. The property of orthonormality may be observed in that a long training sequence field in a current spatial stream may be orthogonal to a corresponding long training sequence field in a subsequent spatial stream. A plurality of orthogonal long training sequences fields, $HT\text{-}LTF_n[i,j]$, for a plurality of spatial streams may be generated according to the following relationship:

$$HT\text{-}LTF_n[i,j] = HT\text{-}LTF[i,j]e^{-j2\pi ij/N_{SS}}, \text{ where} \qquad \text{equation[14]}$$

the index i may refer to an individual spatial stream among a plurality of spatial streams, the index j may refer to an individual long training sequence field within a spatial stream, N_{SS} may refer to the number of transmitted spatial streams, and HT-LTF[i,j] may refer to an individual long training sequence field as represented in any of equations[7], [11], or [13]. As an example of the property of orthonormality, a jth high throughput long training sequence field for a first spatial stream $HT\text{-}LTF_n[1,j]$ may be orthonormal to a corresponding j^{th} high throughput long training sequence field for a second spatial stream $HT\text{-}LTF_n2,j]$.

[0109] In another embodiment of the invention, a discrete Hadamard transform may be utilized to generate orthonormal long training sequences based on a Hadamard matrix. A property of a Hadamard matrix is that the matrix may comprise values of +1 and −1 such that the rows of the Hadamard matrix may be mutually orthogonal. For example, a long training sequence, O(.11aLT), that may be orthonormal to the long training sequence .11aLT as expressed in equation[8] is:

$$.11aLT = \begin{Bmatrix} 1,-1,1,-1,-1,1,1,-1,-1,-1, \\ -1,-1,1,-1,1,-1,1,1,-1,-1,1, \\ 1,1,1,1,-1,1,-1,0,1,1,-1,-1, \\ 1,1,1,1,1,1,-1,1,-1,1,1,-1, \\ -1,1,1,1,1,1,1,-1,1,-1,-1,1 \end{Bmatrix} \qquad \text{equation [15]}$$

[0110] Various embodiments of the invention may not be limited in the methods that may be utilized in generating orthonormal long training sequences or orthonormal long training sequence fields.

[0111] **FIG. 7** shows exemplary training fields and header fields for mixed mode access for $N_{SS}>2$, in accordance with an embodiment of the invention. With reference to **FIG. 7** there is shown a plurality of PPDU preambles and headers **702**, **722**, and **742**. The preamble and header **702** may comprise a legacy short training field (L-STF) **404**, a legacy long training field (L-LTF) **406**, a legacy signal field (L-SIG)

408, a high throughput signal field (HT-SIG) **410**, a high throughput short training field for the first spatial stream (HT-STF_1) **712**, and a plurality of high throughput long training fields for the first spatial stream comprising training fields number **1** through N (HT-$LTF_{1,1}$ . . . HT-$LTF_{1,N}$) **714** . . . **716**. The integer value N may represent the number of long training fields contained in the preamble and header **702**.

[**0112**] The preamble and header **722** may comprise a legacy short training field (L-STF) **424**, a legacy long training field (L-LTF) **426**, a legacy signal field (L-SIG) **428**, a high throughput signal field (HT-SIG) **430**, a high throughput short training field for the second spatial stream (HT-STF_2) **732**, and a plurality of high throughput long training fields for the second spatial stream comprising training fields number **1** through N (HT-$LTF_{2,1}$ . . . HT-$LTF_{2,N}$) **734** . . . **736**. The integer value N may represent the number of long training fields contained in the preamble and header **722**.

[**0113**] The preamble and header **742** may comprise a legacy short training field (L-STF) **444**, a legacy long training field (L-LTF) **446**, a legacy signal field (L-SIG) **448**, a high throughput signal field (HT-SIG) **450**, a high throughput short training field for the spatial stream N_{SS} (HT-STF_{NSS}) **752**, and a plurality of high throughput long training fields for the spatial stream N_{SS} comprising training fields number **1** through N (HT-$LTF_{NSS,1}$ . . . HT-$LTF_{NSS,N}$) **754** . . . **756**. The integer value N may represent the number of long training fields contained in the preamble and header **702**.

[**0114**] The HT-STF fields **712**, **732**, and **752** may each comprise a time duration of about 3.2 μs, and the HT-LTF fields **714** . . . **716**, **734** . . . **736**, and **754** . . . **756** may each comprise a time duration of about 4 μs. The time duration of about 3.2 μs for the HT-STF fields **712**, **732**, and **752** may represent an increase of about 800 ns in time duration relative to the corresponding time duration of about 2.4 μs for the HT-STF fields **412**, **432**, and **452**. The increase of about 800 ns in time duration may allow more time for automatic gain control settling in adapting transmission of signals to utilize beamforming.

[**0115**] Comparing the training fields and header fields **702**, **722**, and **742** to the comparable the training fields and header fields **402**, **422**, and **442** for the case of 2 transmitted spatial streams, wherein N=2, may indicate that the training fields and header fields **702**, **722**, and **742** may comprise a time duration about 5.6 μs shorter than for the comparable training fields and header fields **402**, **422**, and **442**. Comparing the training fields and header fields **702**, **722**, and **742** to the comparable the training fields and header fields **402**, **422**, and **442** for the case of 3 transmitted spatial streams, wherein N=3, may indicate that the training fields and header fields **702**, **722**, and **742** may comprise a time duration of about 8.8 μs shorter than for the comparable training fields and header fields **402**, **422**, and **442**. Comparing the training fields and header fields **702**, **722**, and **742** to the comparable the training fields and header fields **402**, **422**, and **442** for the case of 4 transmitted spatial streams, wherein N=2, may indicate that the training fields and header fields **702**, **722**, and **742** may comprise a time duration about 12 μs shorter than for the comparable training fields and header fields **402**, **422**, and **442**.

[**0116**] Various embodiments of the invention may provide a system for communicating information in a multiple input multiple output (MIMO) communications system that may comprise a transmitter **200** (**FIG. 2***b*) that generates a protocol data unit (PDU) for a current spatial stream comprising a current plurality of long training sequence fields. The transmitter **200** may generate a PDU for a subsequent spatial stream comprising a subsequent plurality of long training sequence fields wherein one of the subsequent plurality of long training sequence fields is orthonormal to a corresponding one of the current plurality of long training sequence fields. The transmitter **200** may append a signal field subsequent to the last of the plurality of long training sequence fields.

[**0117**] Various embodiments of the invention may provide a system for communicating information in a multiple input multiple output (MIMO) communications system that may comprise a transmitter that constructs a greenfield protocol data unit (PDU) comprising a high throughput short training sequence field comprising a time duration of approximately 8 μs. The transmitter may append a first long training sequence field, comprising a time duration of approximately 8 μs, subsequent to the thigh throughput short training sequence field. The transmitter may also append at least one subsequent long training sequence field, comprising a time duration of approximately 4 μs, subsequent to the first long training sequence field. In addition, the transmitter may append a signal field, comprising a time duration of approximately 8 μs, subsequent to the last of at least one subsequent long training sequence field.

[**0118**] Aspects of a method for communicating information in a multiple input multiple output (MIMO) communications system that may comprise constructing a greenfield protocol data unit (PDU) comprising a high throughput short training sequence field comprising a time duration of approximately 8 μs. The method may further comprise appending a first long training sequence field, comprising a time duration of approximately 8 μs, subsequent to the high throughput short training sequence field. At least one subsequent long training sequence field, comprising a time duration of approximately 4 μs, may be appended subsequent to the first long training sequence field. A signal field, comprising a time duration of approximately 8 μs, may also be appended subsequent to the last of at least one subsequent long training sequence field.

[**0119**] Aspects of a method for communicating information in a multiple input multiple output (MIMO) communications system may comprise constructing a mixed mode protocol data unit (PDU) comprising a legacy short training sequence field comprising a time duration of approximately 8 μs. A legacy long training sequence field comprising a time duration of approximately 8 μs may be appended. A legacy signal field comprising a time duration of approximately 4 μs may be appended. The method may comprise appending a high throughput signal field, comprising a time duration of approximately 8 μs, subsequent to the legacy signal field. The method may further comprise appending a high throughput short training sequence field comprising a time duration of approximately 3.2 μs, subsequent to the high throughput signal field, and subsequently appending a plurality of long training sequence fields, comprising a time duration of approximately 4 μs.

[**0120**] Accordingly, the present invention may be realized in hardware, software, or a combination of hardware and

software. The present invention may be realized in a centralized fashion in at least one computer system, or in a distributed fashion where different elements are spread across several interconnected computer systems. Any kind of computer system or other apparatus adapted for carrying out the methods described herein is suited. A typical combination of hardware and software may be a general-purpose computer system with a computer program that, when being loaded and executed, controls the computer system such that it carries out the methods described herein.

[0121] The present invention may also be embedded in a computer program product, which comprises all the features enabling the implementation of the methods described herein, and which when loaded in a computer system is able to carry out these methods. Computer program in the present context means any expression, in any language, code or notation, of a set of instructions intended to cause a system having an information processing capability to perform a particular function either directly or after either or both of the following: a) conversion to another language, code or notation; b) reproduction in a different material form.

[0122] While the present invention has been described with reference to certain embodiments, it will be understood by those skilled in the art that various changes may be made and equivalents may be substituted without departing from the scope of the present invention. In addition, many modifications may be made to adapt a particular situation or material to the teachings of the present invention without departing from its scope. Therefore, it is intended that the present invention not be limited to the particular embodiment disclosed, but that the present invention will include all embodiments falling within the scope of the appended claims.

What is claimed is:

1. A method for communicating information in a multiple input multiple output (MIMO) communications systems, the method comprising:

generating a protocol data unit (PDU) for a current spatial stream comprising a current plurality of long training sequence fields;

appending a signal field subsequent to a last of said current plurality of long training sequence fields;

generating a PDU for a subsequent spatial stream comprising a subsequent plurality of long training sequence fields wherein one of said subsequent plurality of long training sequence fields is orthonormal to a corresponding one of said current plurality of long training sequence fields; and

appending a subsequent signal field subsequent to a last of said subsequent plurality of long training sequence fields.

2. The method according to claim 1, further comprising transmitting 2 orthogonal frequency division multiplexing (OFDM) symbols during a first long training sequence field of said current plurality of long training sequence fields.

3. The method according to claim 2, further comprising generating said 2 OFDM symbols based on long training sequences that are approximately identical.

4. The method according to claim 2, further comprising transmitting 1 OFDM symbol during a long training sequence field that is subsequent to said first long training sequence field.

5. The method according to claim 1, further comprising transmitting 2 OFDM symbols during said signal field.

6. The method according to claim 1, further comprising, for a first spatial stream, transmitting a first long training sequence field, and a second long training field via said current spatial stream, in a system utilizing 2 transmitted spatial streams, wherein said first long training sequence field, and said second long training sequence field utilizes a long training sequence based on IEEE 802.11a.

7. The method according to claim 1, further comprising, for a second spatial stream, transmitting a first long training sequence field, and a second long training field via said current spatial stream, in a system utilizing 2 transmitted spatial streams, wherein said first long training sequence field, and said second long training sequence field utilizes a phase shifted long training sequence based on IEEE 802.11a.

8. The method according to claim 1, further comprising, for a first spatial stream, transmitting a first long training sequence field, a second long training sequence field, and a third long training field via said current spatial stream, in a system utilizing 3 transmitted spatial streams, wherein said first long training sequence field, said second long training sequence field, and said third long training sequence field utilizes a multiplicatively scaled long training sequence based on IEEE 802.11a.

9. The method according to claim 8, further comprising transmitting a first long training sequence field, a second long training sequence field, and a third long training field via a subsequent to said first spatial stream, in a system utilizing 3 transmitted spatial streams, wherein said first long training sequence field, said second long training sequence field, and said third long training sequence field utilizes a multiplicatively scaled and phase shifted long training sequence based on IEEE 802.11a.

10. The method according to claim 1, further comprising, for a first spatial stream, transmitting a first long training sequence field via said current spatial stream, in a system utilizing 4 transmitted spatial streams, wherein said first long training sequence field utilizes a multiplicatively scaled long training sequence based on IEEE 802.11a.

11. The method according to claim 10, further comprising transmitting a subsequent to said first long training sequence field, via said first spatial stream, wherein said subsequent long training sequence field utilizes a long training sequence based on IEEE 802.11a.

12. The method according to claim 11, wherein a subsequent to said first spatial stream comprises a corresponding long training sequence to said first long training sequence field that utilizes said multiplicatively scaled long training sequence, and a plurality of long training sequence fields that utilize said long training sequence based on IEEE 802.11a.

13. The method according to claim 1, further comprising generating said corresponding one of said current plurality based on a discrete Fourier transform matrix.

14. A system for communicating information in a multiple input multiple output (MIMO) communications systems, the system comprising:

a transmitter that generates a protocol data unit (PDU) for a current spatial stream comprising a current plurality of long training sequence fields;

said transmitter appends a signal field subsequent to a last of said current plurality of long training sequence fields;

said transmitter generates a PDU for a subsequent spatial stream comprising a subsequent plurality of long training sequence fields wherein one of said subsequent plurality of long training sequence fields is orthonormal to a corresponding one of said current plurality of long training sequence fields; and

said transmitter appends a subsequent signal field subsequent to a last of said subsequent plurality of long training sequence fields.

15. The system according to claim 14, further comprising antenna front end circuitry that transmits 2 orthogonal frequency division multiplexing (OFDM) symbols during a first long training sequence field of said current plurality of long training sequence fields.

16. The system according to claim 15, further comprising inverse fast Fourier transform circuitry that generates said 2 OFDM symbols based on long training sequences that are approximately identical.

17. The system according to claim 15, wherein said antenna front end circuitry transmits 1 OFDM symbol during a long training sequence field that is subsequent to said first long training sequence field.

18. The system according to claim 14, further comprising antenna front end circuitry that transmits 2 OFDM symbols during said signal field.

19. The system according to claim 14, further comprising, for a first spatial stream, antenna front end circuitry that transmits a first long training sequence field, and a second long training field via said current spatial stream, in a system utilizing 2 transmitted spatial streams, wherein said first long training sequence field, and said second long training sequence field utilizes a long training sequence based on IEEE 802.11a.

20. The system according to claim 14, further comprising, for a second spatial stream, antenna front end circuitry that transmits a first long training sequence field, and a second long training field via said current spatial stream, in a system utilizing 2 transmitted spatial streams, wherein said first long training sequence field, and said second long training sequence field utilizes a phase shifted long training sequence based on IEEE 802.11a.

21. The system according to claim 14, further comprising, for a first spatial stream, antenna front end circuitry that transmits a first long training sequence field, a second long training sequence field, and a third long training field via said current spatial stream, in a system utilizing 3 transmitted spatial streams, wherein said first long training sequence field, said second long training sequence field, and said third long training sequence field utilizes a multiplicatively scaled long training sequence based on IEEE 802.11a.

22. The system according to claim 21, wherein said antenna front end circuitry transmits a first long training sequence field, a second long training sequence field, and a third long training field via a subsequent to said first spatial stream, in a system utilizing 3 transmitted spatial streams, wherein said first long training sequence field, said second long training sequence field, and said third long training sequence field utilizes a multiplicatively scaled and phase shifted long training sequence based on IEEE 802.11a.

23. The system according to claim 14, further comprising, for a first spatial stream, antenna front end circuitry that transmits a first long training sequence field via said current spatial stream, in a system utilizing 4 transmitted spatial streams, wherein said first long training sequence field utilizes a multiplicatively scaled long training sequence based on IEEE 802.11a.

24. The system according to claim 23, wherein said antenna front end circuitry transmits a subsequent to said first long training sequence field, via said first spatial stream, wherein said subsequent long training sequence field utilizes a long training sequence based on IEEE 802.11a.

25. The system according to claim 24, wherein a subsequent to said first spatial stream comprises a corresponding long training sequence to said first long training sequence field that utilizes said multiplicatively scaled long training sequence, and a plurality of long training sequence fields that utilize said long training sequence based on IEEE 802.11a.

26. The system according to claim 14, wherein said transmitter generates said corresponding one of said current plurality based on a discrete Fourier transform matrix.

27. A method for communicating information in a multiple input multiple output (MIMO) communications system, the method comprising:

constructing a mixed mode protocol data unit (PDU) comprising, a legacy short training sequence field comprising a time duration of approximately 8 microseconds;

appending a legacy long training sequence field comprising a time duration of approximately 8 microseconds, subsequent to said legacy short training sequence field;

appending a legacy signal field comprising a time duration of approximately 4 microseconds, subsequent to said legacy long training field;

appending a high throughput signal field comprising a time duration of approximately 8 microseconds, subsequent to said legacy signal field;

appending a high throughput short training sequence field comprising a time duration of approximately 3.2 microseconds, subsequent to said high throughput signal field; and

appending a plurality of long training sequence fields, comprising a time duration of approximately 4 microseconds, subsequent to said high throughput short training sequence field.

* * * * *