US 20100260159A1

(19) United States

(12) Patent Application Publication

Zhang et al.

(10) Pub. No.: US 2010/0260159 A1

(43) Pub. Date: Oct. 14, 2010

(54) **PHYSICAL LAYER FRAME FORMAT FOR WLAN**

(76) Inventors: **Hongyuan Zhang**, Fremont, CA (US); **Hui-Ling Lou**, Sunnyvale, CA (US); **Rohit U. Nabar**, Sunnyvale, CA (US); **Sudhir Srinivasa**, Sunnyvale, CA (US); **Mao Yu**, San Jose, CA (US); **Raja Banerjea**, Sunnyvale, CA (US)

Correspondence Address:
MARSHALL, GERSTEIN & BORUN, LLP (MARVELL)
233 SOUTH WACKER DRIVE, 6300 WILLIS TOWER
CHICAGO, IL 60606-6357 (US)

(21) Appl. No.: **12/758,603**

(22) Filed: **Apr. 12, 2010**

Related U.S. Application Data

(60) Provisional application No. 61/168,732, filed on Apr. 13, 2009, provisional application No. 61/181,518, filed on May 27, 2009, provisional application No. 61/227,360, filed on Jul. 21, 2009, provisional application No. 61/228,911, filed on Jul. 27, 2009, provisional application No. 61/229,900, filed on Jul. 30, 2009, provisional application No. 61/232,724, filed on Aug. 10, 2009, provisional application No. 61/233,440, filed on Aug. 12, 2009, provisional application No. 61/234,943, filed on Aug. 18, 2009, provisional application No. 61/240,604, filed on Sep. 8, 2009, provisional application No. 61/240,945, filed on Sep. 9, 2009, provisional application No. 61/241,760, filed on Sep. 11, 2009, provisional application No. 61/244,779, filed on Sep. 22, 2009, provisional application No. 61/252,290, filed on Oct. 16, 2009, provisional application No. 61/319,773, filed on Mar. 31, 2010.

Publication Classification

(51) **Int. Cl.**
H04W 4/00 (2009.01)

(52) **U.S. Cl.** **370/338**

(57) **ABSTRACT**

In a method for generating a data unit for transmission via a communication channel, wherein the data unit conforms to a first communication protocol, a preamble of the data unit is generated. The preamble includes a first field having information that indicates a duration of the data unit, the first field being formatted such that the first field is decodable by a receiver device that conforms to a second communication protocol but does not conform to the first communication protocol to determine the duration of the data unit based on the first field. Additionally, the preamble is formatted such that a portion of the preamble is decodable by a receiver device that conforms to a third communication protocol but does not conform to the first communication protocol. Also, the preamble is formatted such that a receiver device that conforms to the first communication protocol can determine that the data unit conforms to the first communication protocol. A data portion of the data unit that conforms to the first communication protocol and does not conform to either (i) the second communication protocol or (ii) the third communication protocol is generated.

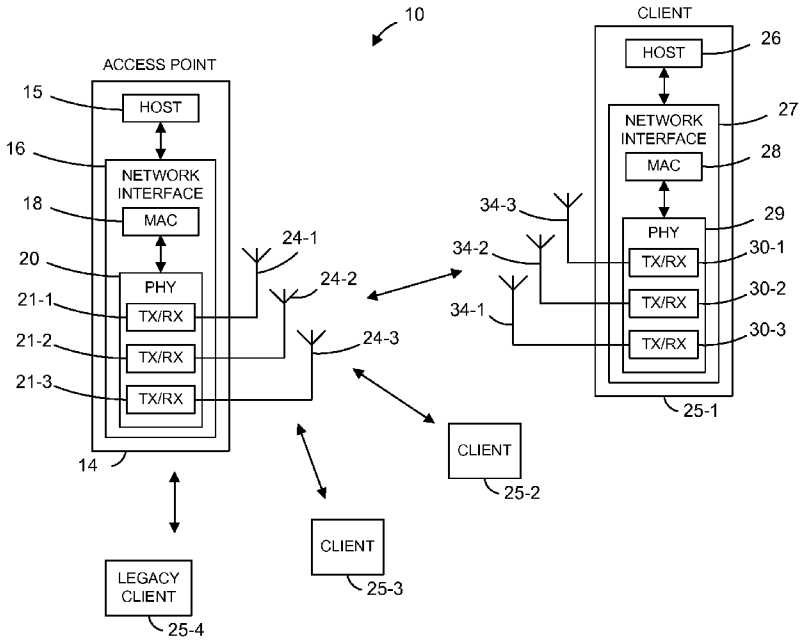

INTEL-1017
9,614,566

FIG. 1

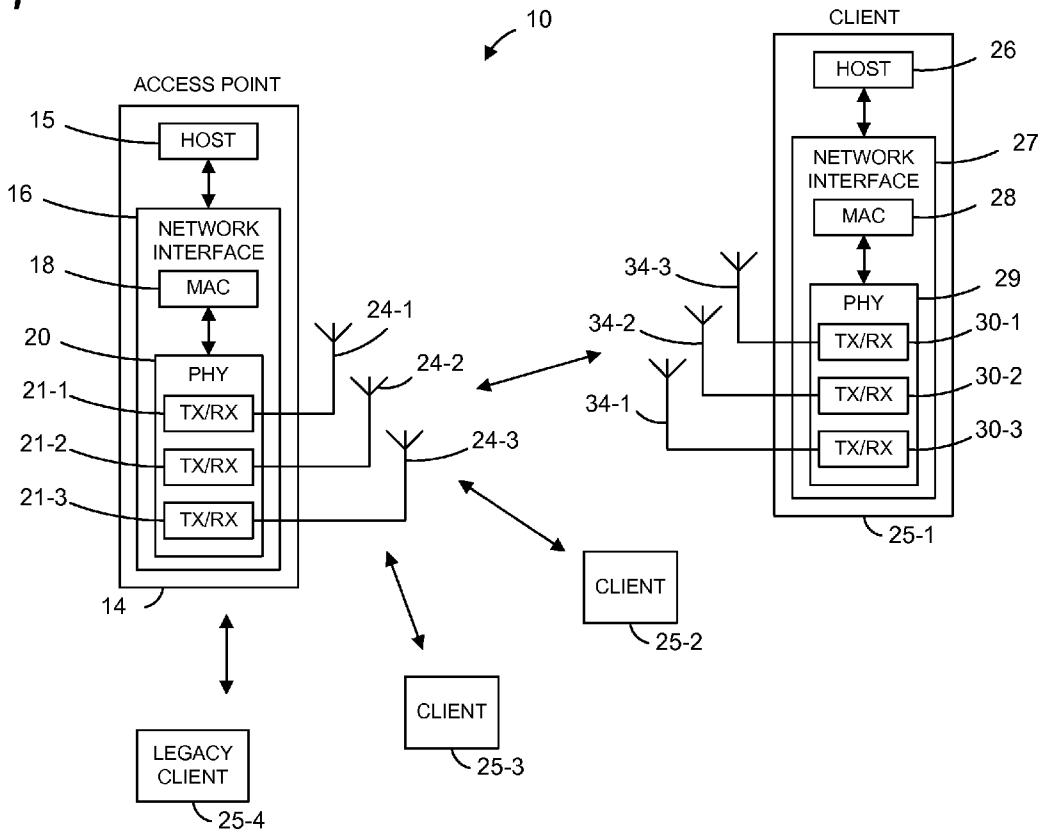
10
ACCESS POINT
15
HOST
16
NETWORK INTERFACE
18
MAC
20
PHY
21-1
TX/RX
21-2
TX/RX
21-3
TX/RX
14
24-1
24-2
24-3
CLIENT
26
HOST
27
NETWORK INTERFACE
28
MAC
29
PHY
30-1
TX/RX
30-2
TX/RX
30-3
TX/RX
34-1
34-2
34-3
25-1
CLIENT
25-2
CLIENT
25-3
LEGACY CLIENT
25-4

FIG. 2A

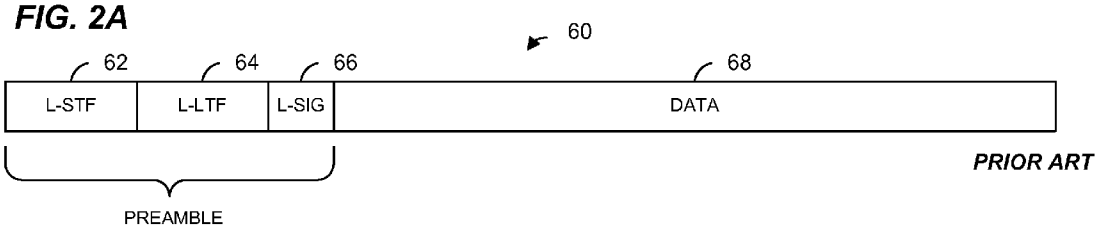

FIG. 2B

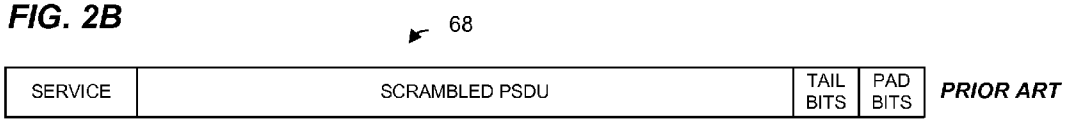

FIG. 3

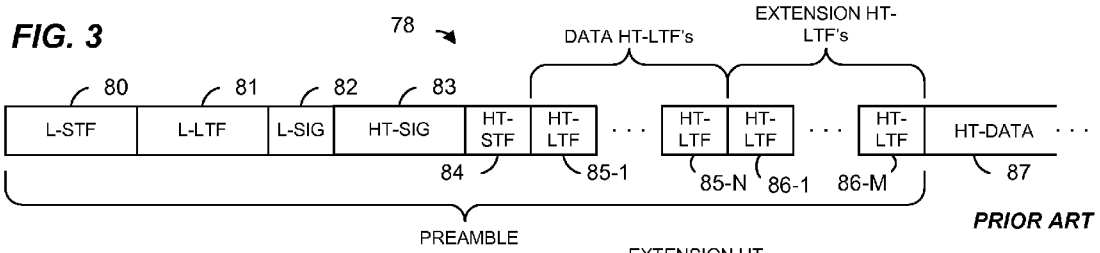

FIG. 4

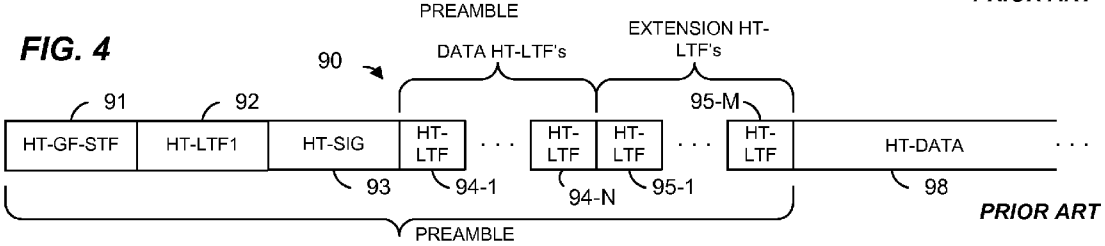

FIG. 5

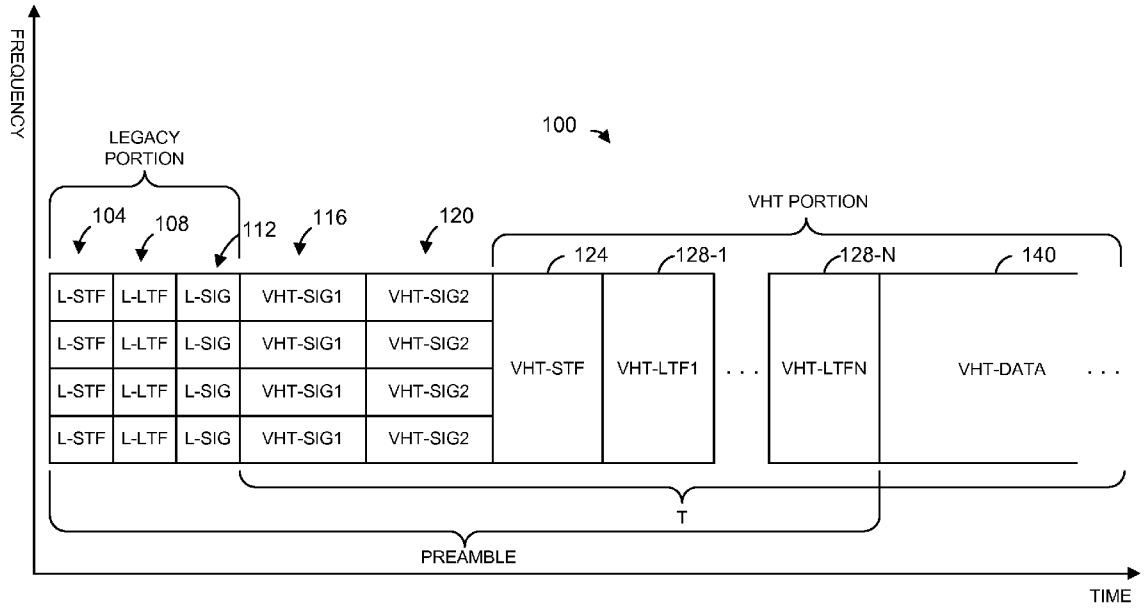
FREQUENCY
100
LEGACY PORTION
104
108
112
116
120
VHT PORTION
124
128-1
128-N
140
L-STF
L-LTF
L-SIG
VHT-SIG1
VHT-SIG2
VHT-STF
VHT-LTF1
VHT-LTFN
VHT-DATA
T
PREAMBLE
TIME

FIG. 6

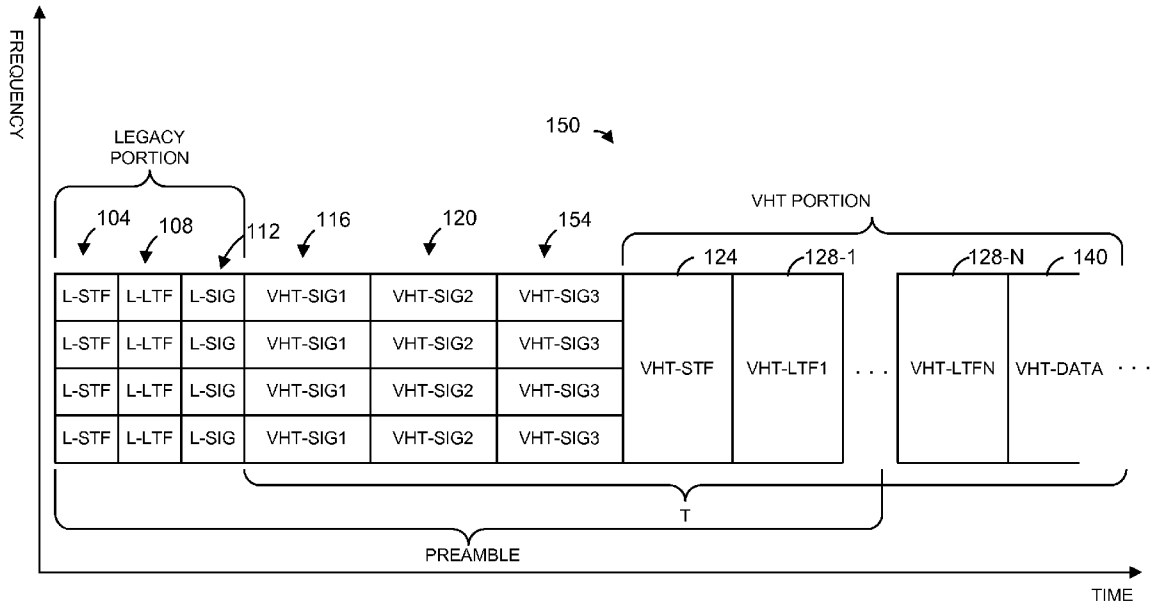
FREQUENCY
LEGACY PORTION
150
104
108
112
116
120
154
VHT PORTION
124
128-1
128-N
140
L-STF
L-LTF
L-SIG
VHT-SIG1
VHT-SIG2
VHT-SIG3
VHT-STF
VHT-LTF1
VHT-LTFN
VHT-DATA
T
PREAMBLE
TIME

FIG. 7A

PRIOR ART

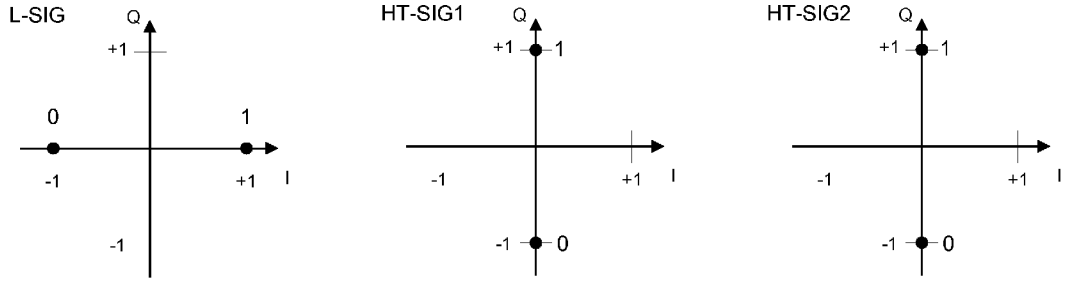

FIG. 7B

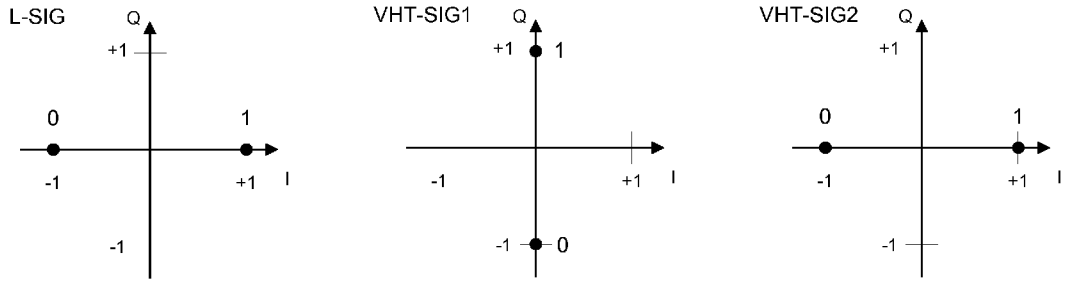

FIG. 7C

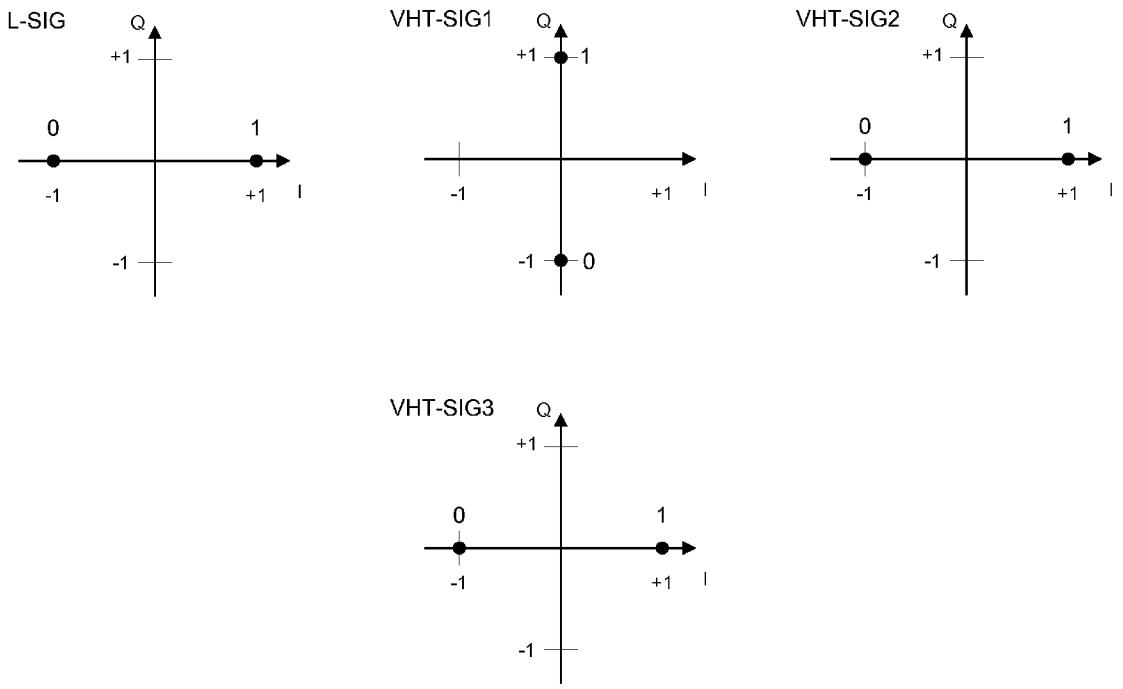
L-SIG
Q
+1
0
1
-1
+1
I
-1
VHT-SIG1
Q
+1
1
-1
+1
I
-1
0
VHT-SIG2
Q
+1
0
1
-1
+1
I
-1
VHT-SIG3
Q
+1
0
1
-1
+1
I
-1

FIG. 7D

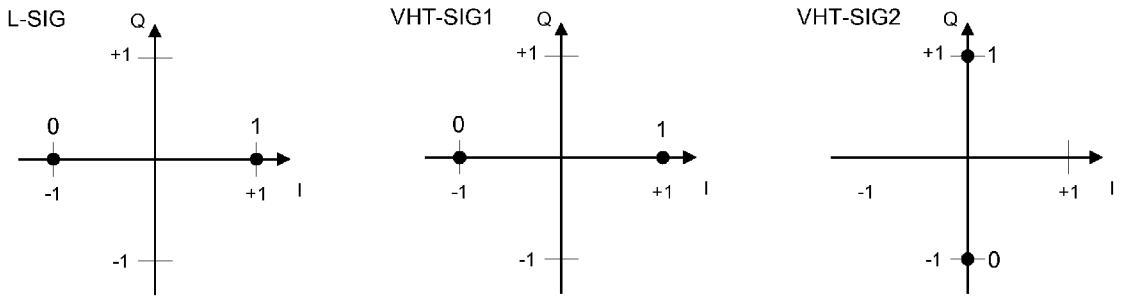
L-SIG
Q
+1
0
1
-1
+1
I
-1
VHT-SIG1
Q
+1
0
1
-1
+1
I
-1
VHT-SIG2
Q
+1
1
-1
+1
I
-1
0

FIG. 7E

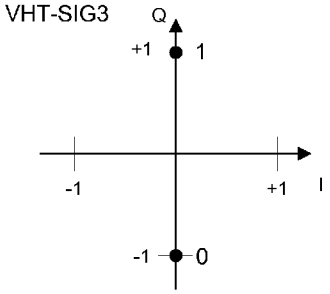
VHT-SIG3
Q
+1
1
-1
+1
I
-1
0

FIG. 8

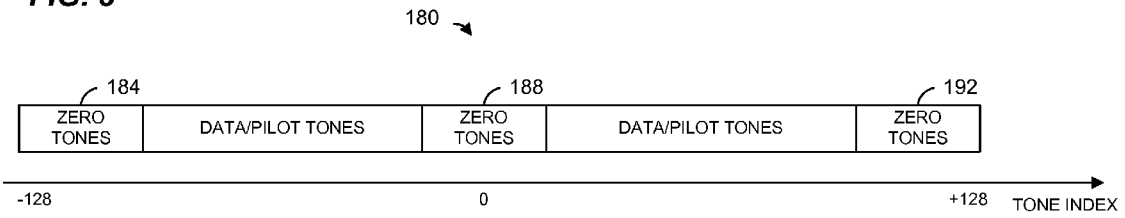
180
184
188
192
ZERO TONES
DATA/PILOT TONES
ZERO TONES
DATA/PILOT TONES
ZERO TONES
-128
0
+128
TONE INDEX

FIG. 9

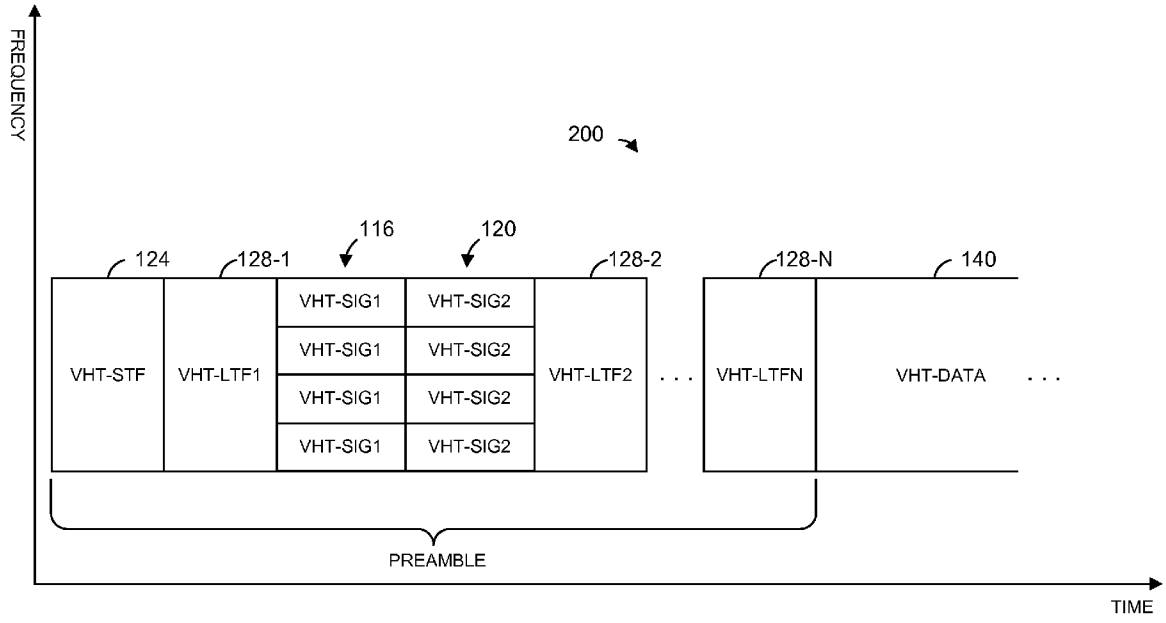
FREQUENCY
200
116
120
124
128-1
128-2
128-N
140
VHT-STF
VHT-LTF1
VHT-SIG1
VHT-SIG2
VHT-SIG1
VHT-SIG2
VHT-SIG1
VHT-SIG2
VHT-SIG1
VHT-SIG2
VHT-LTF2
. . .
VHT-LTFN
VHT-DATA
. . .
PREAMBLE
TIME

FIG. 10

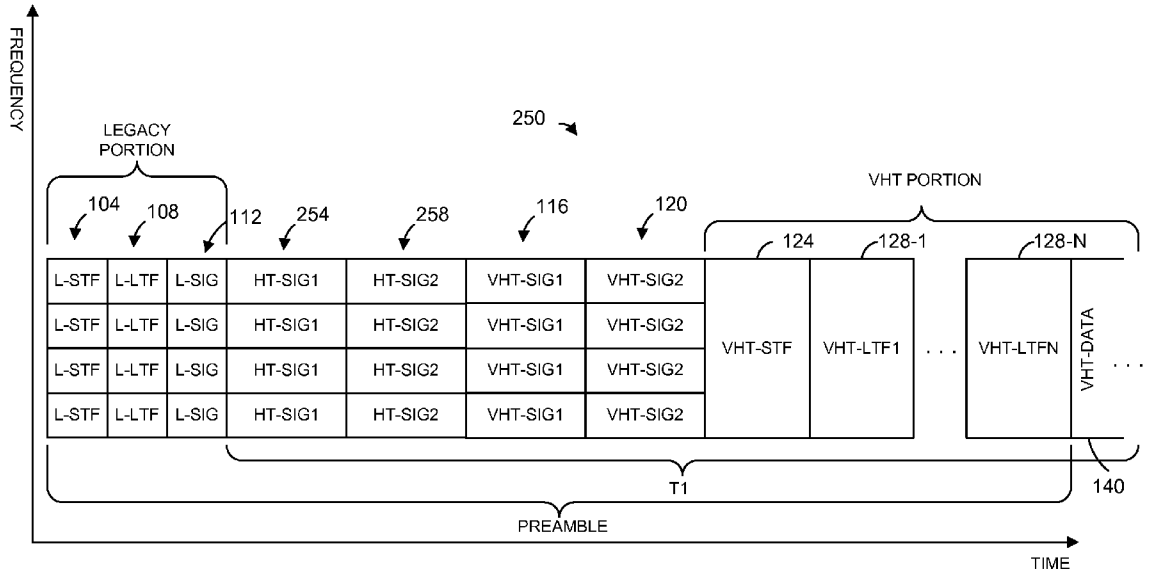
FREQUENCY
250
LEGACY PORTION
VHT PORTION
104
108
112
254
258
116
120
124
128-1
128-N
L-STF
L-LTF
L-SIG
HT-SIG1
HT-SIG2
VHT-SIG1
VHT-SIG2
VHT-STF
VHT-LTF1
VHT-LTFN
VHT-DATA
T1
140
PREAMBLE
TIME

FIG. 11

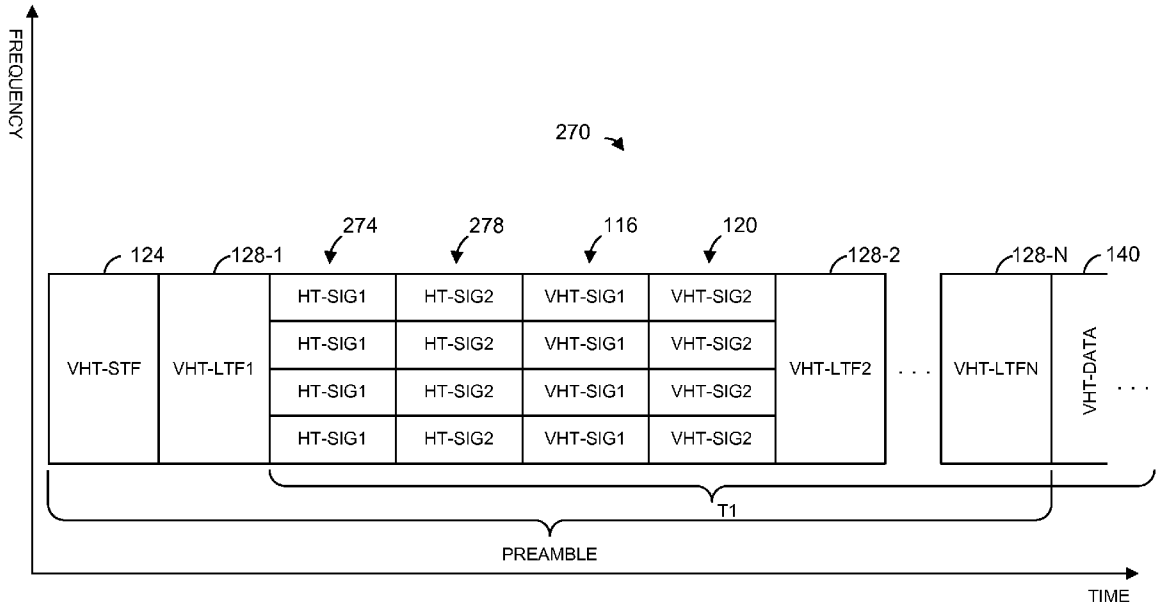
FREQUENCY
270
124
128-1
274
278
116
120
128-2
128-N
140
VHT-STF
VHT-LTF1
HT-SIG1
HT-SIG2
VHT-SIG1
VHT-SIG2
HT-SIG1
HT-SIG2
VHT-SIG1
VHT-SIG2
HT-SIG1
HT-SIG2
VHT-SIG1
VHT-SIG2
HT-SIG1
HT-SIG2
VHT-SIG1
VHT-SIG2
VHT-LTF2
. . .
VHT-LTFN
VHT-DATA
. . .
T1
PREAMBLE
TIME

FIG. 12A

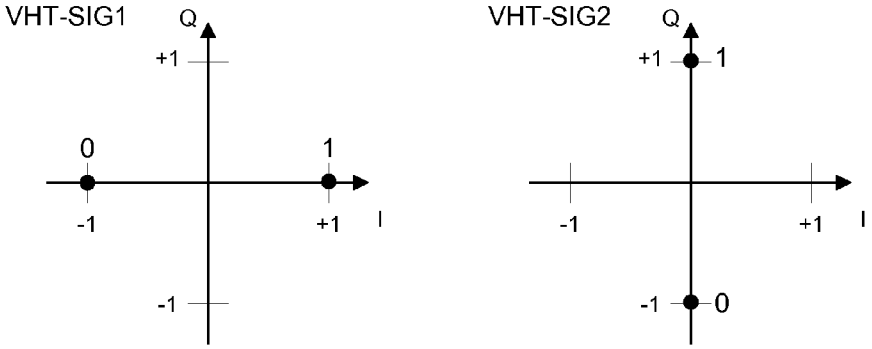

FIG. 12B

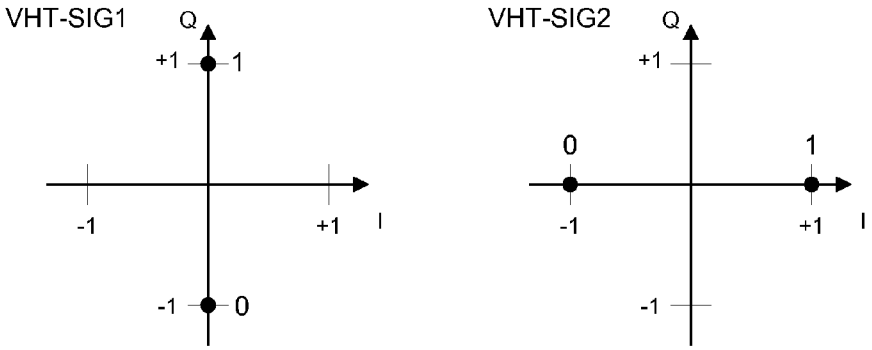

FIG. 13

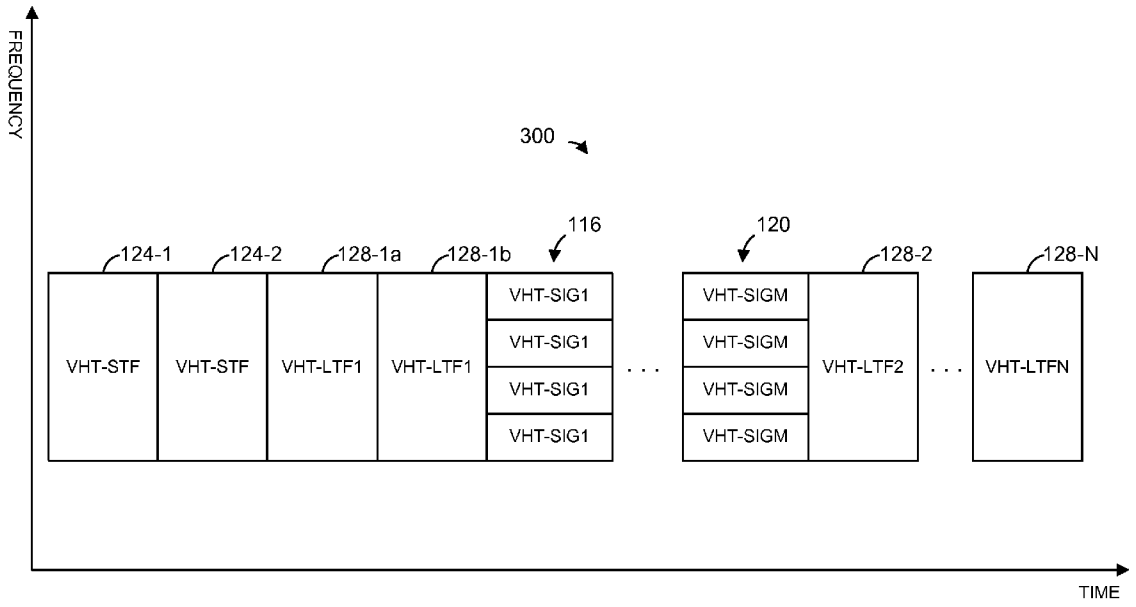
FREQUENCY
300
116
120
124-1
124-2
128-1a
128-1b
128-2
128-N
VHT-STF
VHT-STF
VHT-LTF1
VHT-LTF1
VHT-SIG1
VHT-SIG1
VHT-SIG1
VHT-SIG1
. . .
VHT-SIGM
VHT-SIGM
VHT-SIGM
VHT-SIGM
VHT-LTF2
. . .
VHT-LTFN
TIME

FIG. 14

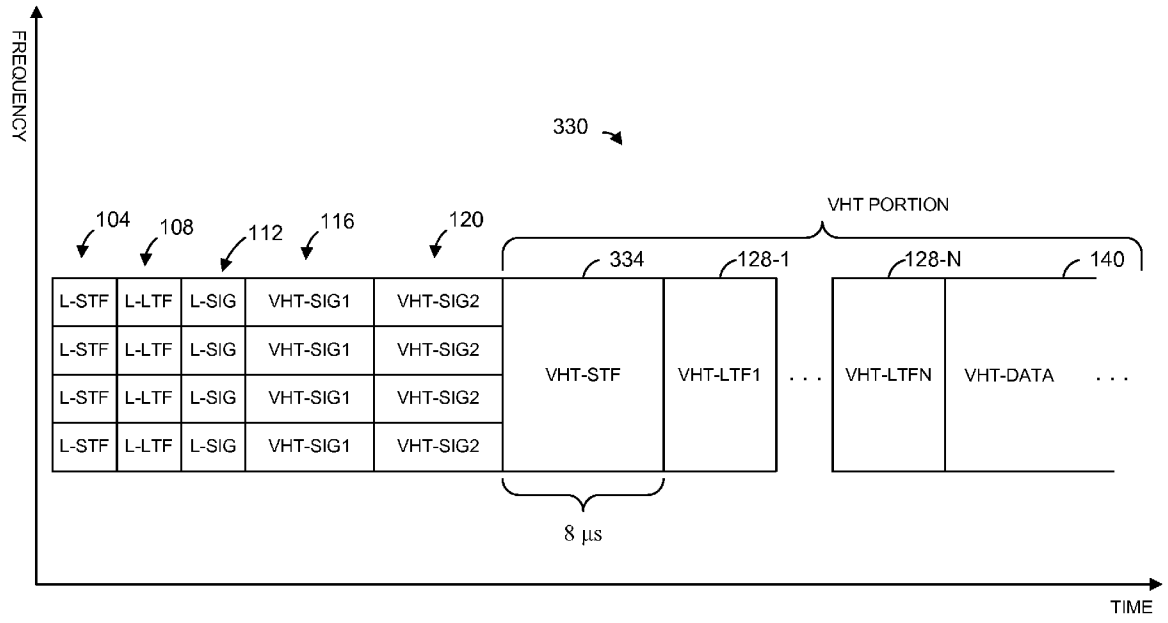
FREQUENCY
330
VHT PORTION
104
108
112
116
120
334
128-1
128-N
140
L-STF
L-LTF
L-SIG
VHT-SIG1
VHT-SIG2
VHT-STF
VHT-LTF1
VHT-LTFN
VHT-DATA
8 μs
TIME

FIG. 15

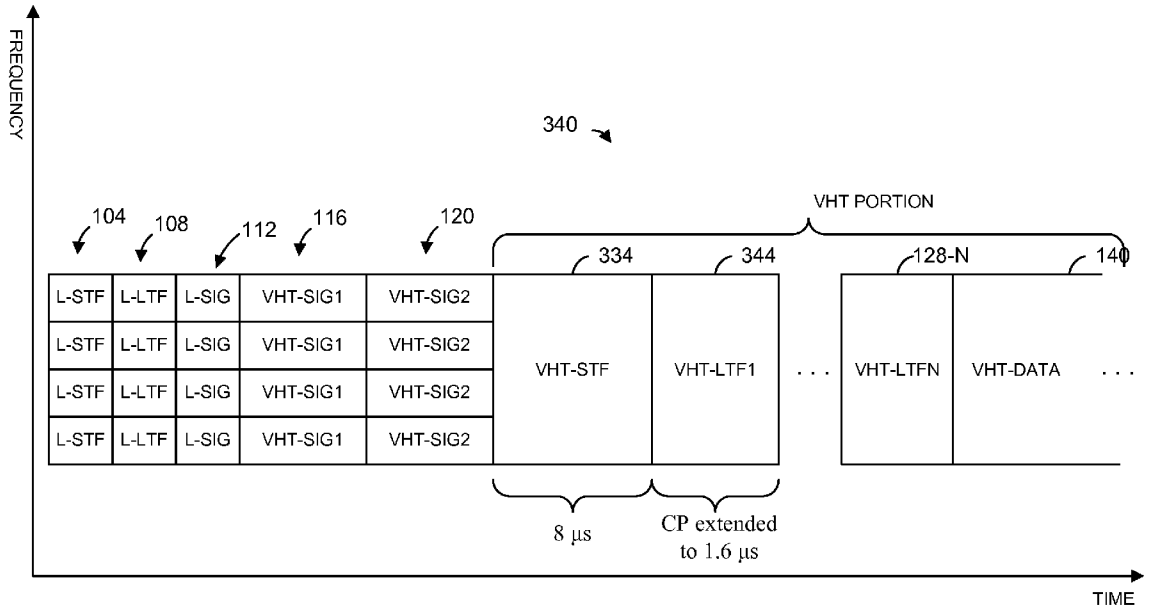
FREQUENCY
340
VHT PORTION
104
108
112
116
120
334
344
128-N
140
L-STF
L-LTF
L-SIG
VHT-SIG1
VHT-SIG2
VHT-STF
VHT-LTF1
VHT-LTFN
VHT-DATA
8 µs
CP extended to 1.6 µs
TIME

FIG. 16

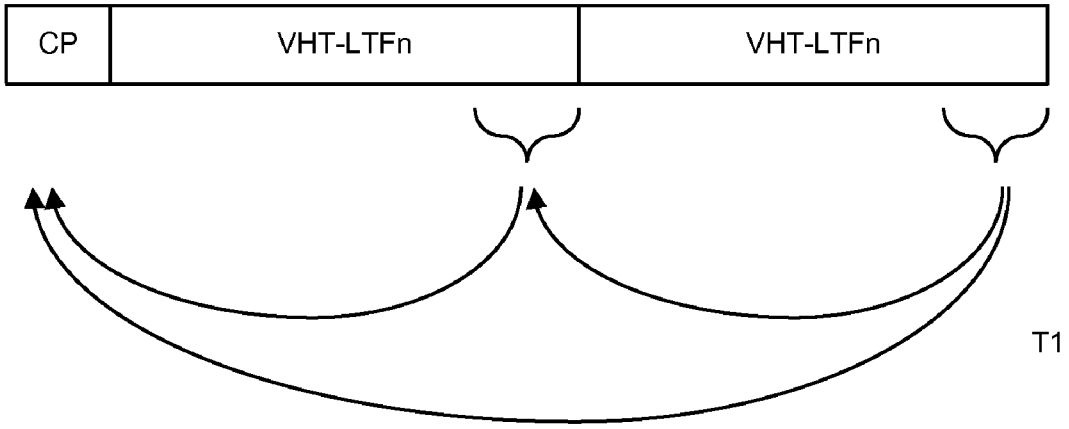

FIG. 17

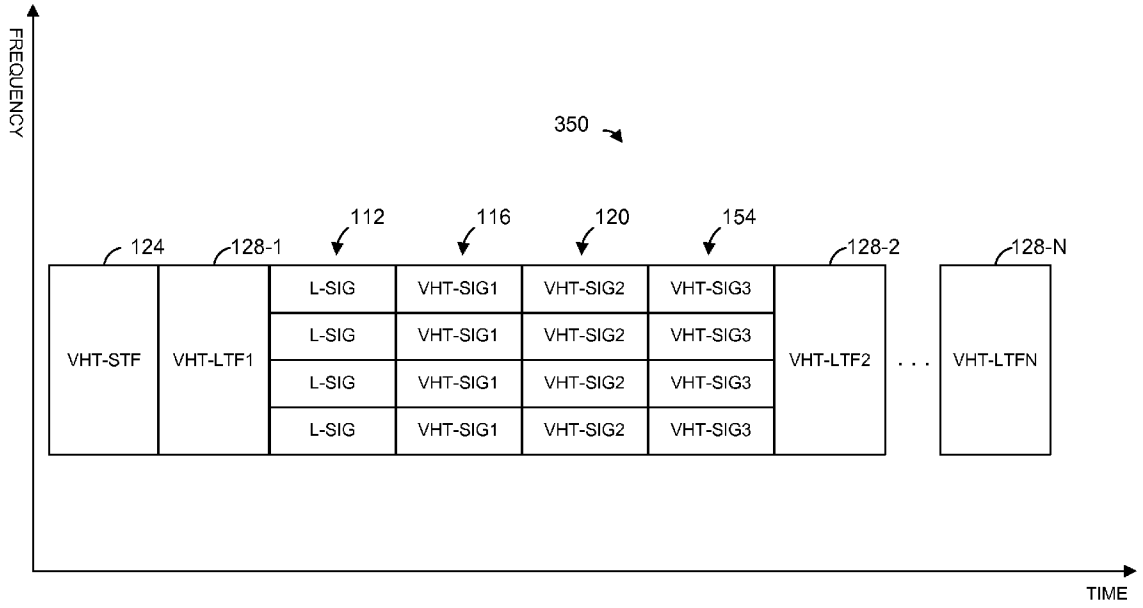
FREQUENCY
350
124
128-1
112
116
120
154
128-2
128-N
VHT-STF
VHT-LTF1
L-SIG
VHT-SIG1
VHT-SIG2
VHT-SIG3
L-SIG
VHT-SIG1
VHT-SIG2
VHT-SIG3
L-SIG
VHT-SIG1
VHT-SIG2
VHT-SIG3
L-SIG
VHT-SIG1
VHT-SIG2
VHT-SIG3
VHT-LTF2
. . .
VHT-LTFN
TIME

FIG. 18

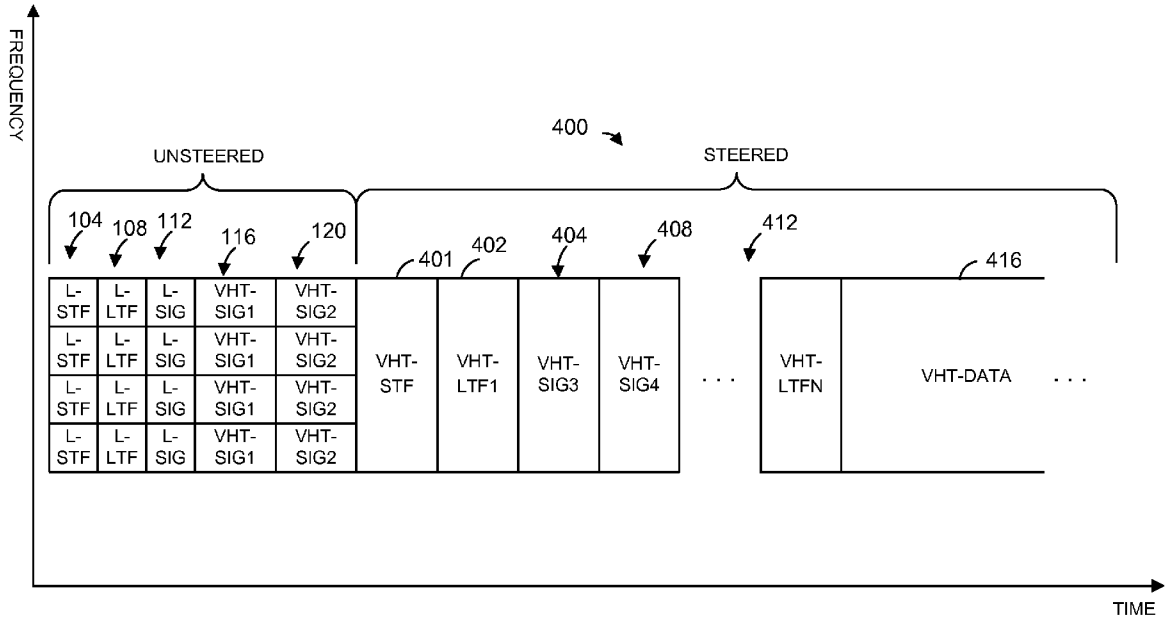
FREQUENCY
400
UNSTEERED
STEERED
104
108
112
116
120
401
402
404
408
412
416
L-STF
L-LTF
L-SIG
VHT-SIG1
VHT-SIG2
VHT-STF
VHT-LTF1
VHT-SIG3
VHT-SIG4
VHT-LTFN
VHT-DATA
TIME

FIG. 19

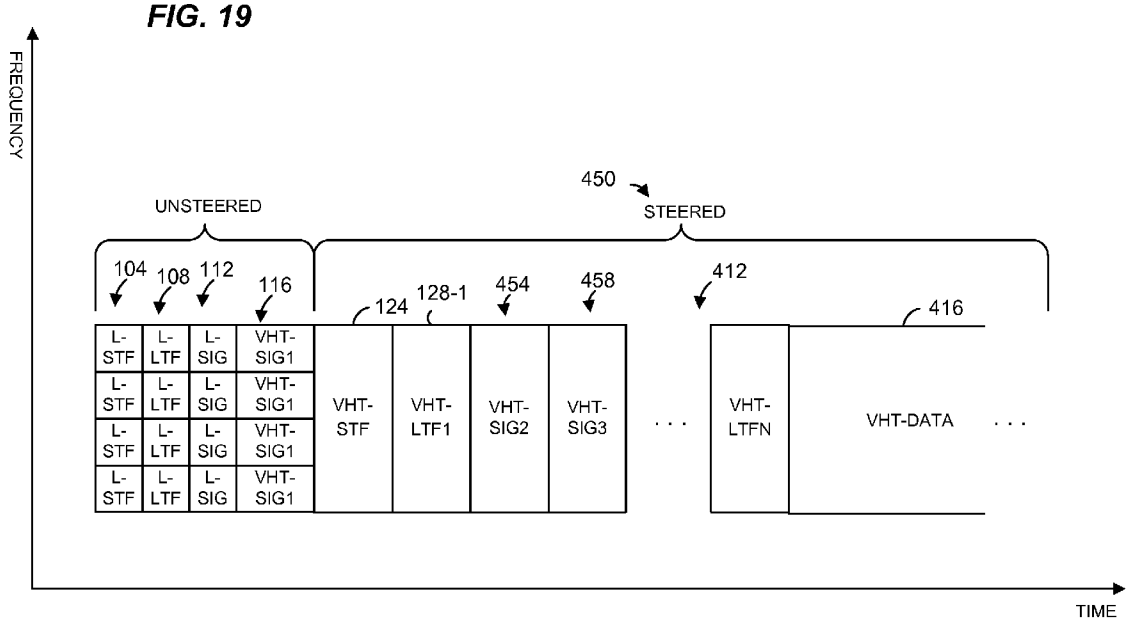
FREQUENCY
450
UNSTEERED
STEERED
104
108
112
116
124
128-1
454
458
412
416
L-STF
L-LTF
L-SIG
VHT-SIG1
VHT-STF
VHT-LTF1
VHT-SIG2
VHT-SIG3
VHT-LTFN
VHT-DATA
TIME

FIG. 20

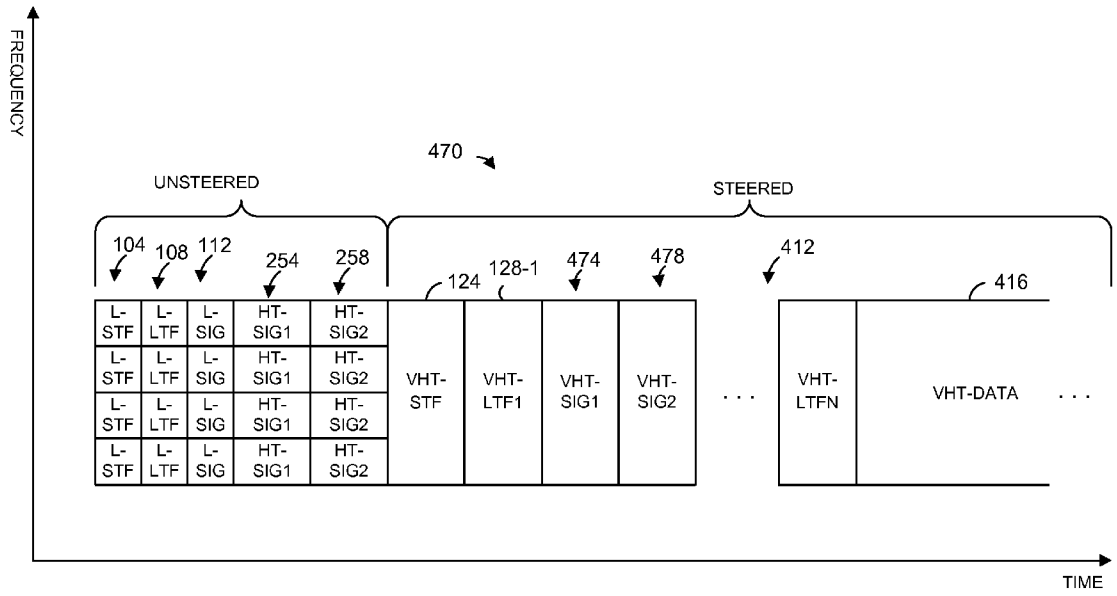
FREQUENCY
470
UNSTEERED
STEERED
104
108
112
254
258
124
128-1
474
478
412
416
L-STF
L-LTF
L-SIG
HT-SIG1
HT-SIG2
VHT-STF
VHT-LTF1
VHT-SIG1
VHT-SIG2
VHT-LTFN
VHT-DATA
TIME

FIG. 21A

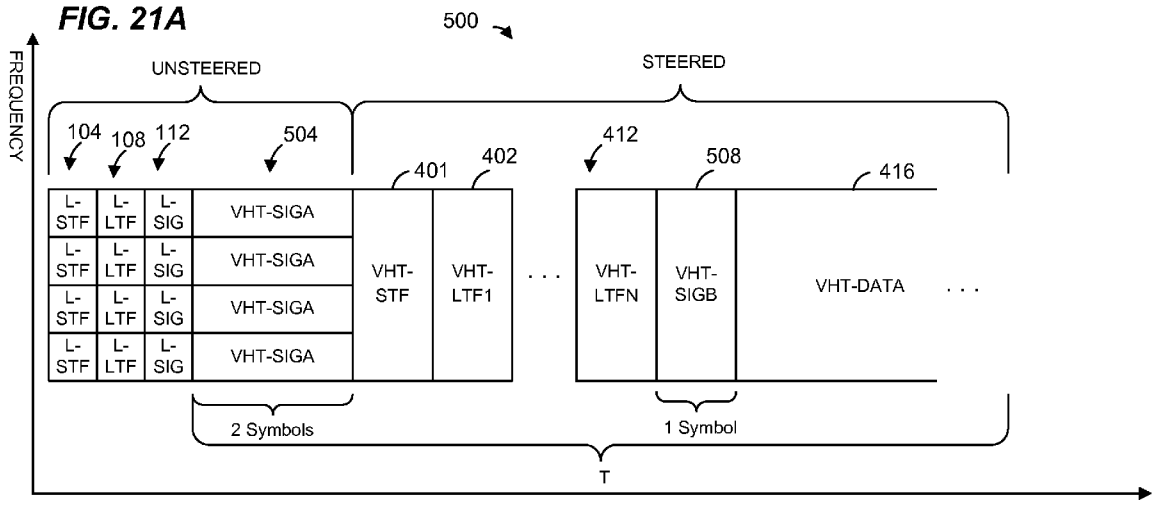

FIG. 21B

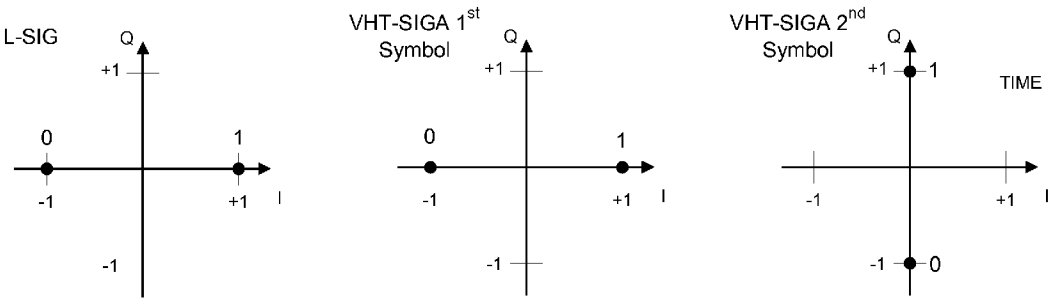

FIG. 22

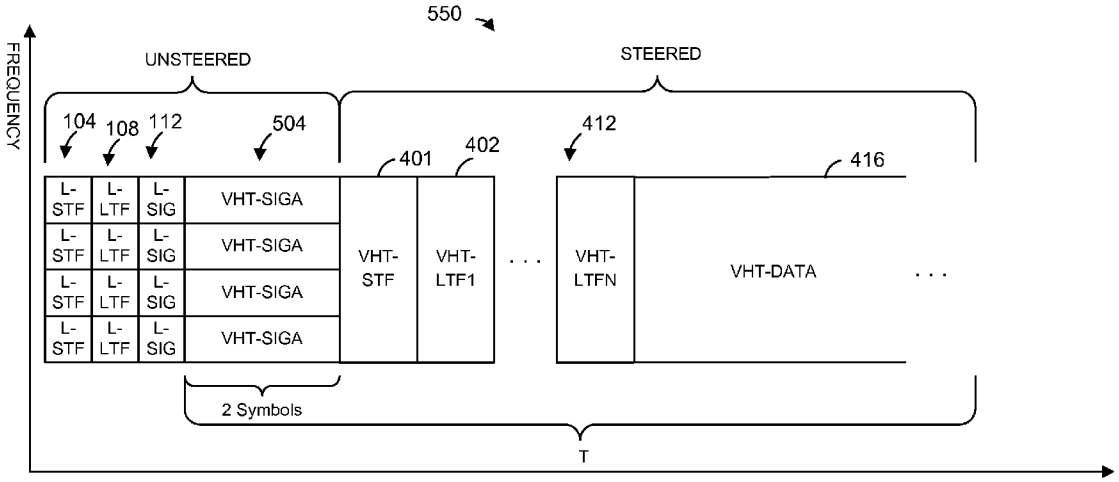
550
FREQUENCY
UNSTEERED
STEERED
104
108
112
504
401
402
412
416
L-STF
L-LTF
L-SIG
VHT-SIGA
VHT-STF
VHT-LTF1
VHT-LTFN
VHT-DATA
2 Symbols
T

FIG. 23

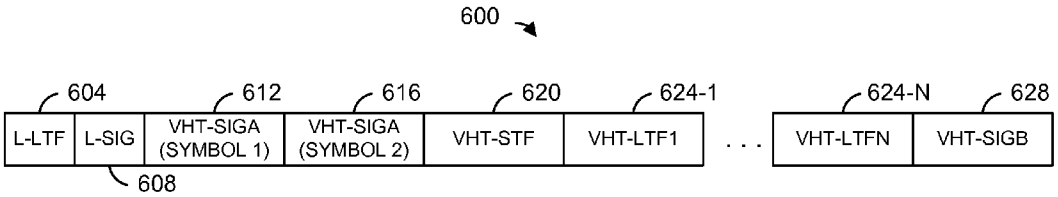
600
604
612
616
620
624-1
624-N
628
L-LTF
L-SIG
VHT-SIGA (SYMBOL 1)
VHT-SIGA (SYMBOL 2)
VHT-STF
VHT-LTF1
. . .
VHT-LTFN
VHT-SIGB
608

FIG. 24

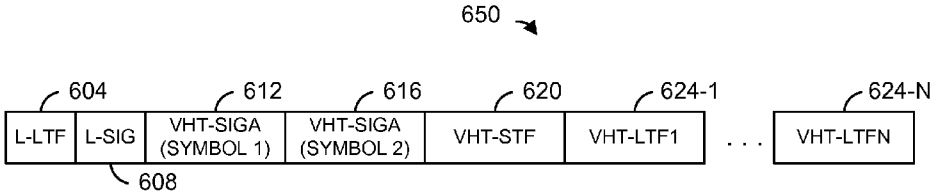
650
604
612
616
620
624-1
624-N
L-LTF
L-SIG
VHT-SIGA (SYMBOL 1)
VHT-SIGA (SYMBOL 2)
VHT-STF
VHT-LTF1
. . .
VHT-LTFN
608

PHYSICAL LAYER FRAME FORMAT FOR WLAN

CROSS-REFERENCES TO RELATED APPLICATIONS

[0001] This disclosure claims the benefit of the following U.S. Provisional Patent Applications:

[0002] U.S. Provisional Patent Application No. 61/168,732, entitled "80 MHz OFDM for WLAN," filed on Apr. 13, 2009;

[0003] U.S. Provisional Patent Application No. 61/181,518, entitled "80 MHz OFDM for WLAN," filed May 27, 2009;

[0004] U.S. Provisional Patent Application No. 61/227,360, entitled "80 MHz OFDM for WLAN," filed Jul. 21, 2009;

[0005] U.S. Provisional Patent Application No. 61/228,911, entitled "80 MHz OFDM for WLAN," filed Jul. 27, 2009;

[0006] U.S. Provisional Patent Application No. 61/229,900, entitled "80 MHz OFDM for WLAN," filed Jul. 30, 2009;

[0007] U.S. Provisional Patent Application No. 61/232,724, entitled "80 MHz OFDM for WLAN," filed Aug. 10, 2009;

[0008] U.S. Provisional Patent Application No. 61/233,440, entitled "80 MHz OFDM for WLAN," filed Aug. 12, 2009;

[0009] U.S. Provisional Patent Application No. 61/234,943, entitled "80 MHz OFDM for WLAN," filed Aug. 18, 2009;

[0010] U.S. Provisional Patent Application No. 61/240,604, entitled "80 MHz OFDM for WLAN," filed Sep. 8, 2009;

[0011] U.S. Provisional Patent Application No. 61/240,945, entitled "80 MHz OFDM for WLAN," filed Sep. 9, 2009;

[0012] U.S. Provisional Patent Application No. 61/241,760, entitled "80 MHz OFDM for WLAN," filed Sep. 11, 2009;

[0013] U.S. Provisional Patent Application No. 61/244,779, entitled "80 MHz OFDM for WLAN," filed Sep. 22, 2009;

[0014] U.S. Provisional Patent Application No. 61/252,290, entitled "80 MHz OFDM for WLAN," filed Oct. 16, 2009; and

[0015] U.S. Provisional Patent Application No. 61/319,773, entitled "NDP Preamble," filed Mar. 31, 2010.

[0016] The disclosures of all of the above-referenced patent applications are hereby incorporated by reference herein in their entireties.

FIELD OF THE DISCLOSURE

[0017] The present disclosure relates generally to communication networks and, more particularly, to wireless local area networks that utilize orthogonal frequency division multiplexing (OFDM).

BACKGROUND

[0018] The background description provided herein is for the purpose of generally presenting the context of the disclosure. Work of the presently named inventors, to the extent it is described in this background section, as well as aspects of the description that may not otherwise qualify as prior art at the time of filing, are neither expressly nor impliedly admitted as prior art against the present disclosure.

[0019] When operating in an infrastructure mode, wireless local area networks (WLANs) typically include an access point (AP) and one or more client stations. WLANs have evolved rapidly over the past decade. Development of WLAN standards such as the Institute for Electrical and Electronics Engineers (IEEE) 802.11a, 802.11b, 802.11g, and 802.11n Standards has improved single-user peak data throughput. For example, the IEEE 802.11b Standard specifies a single-user peak throughput of 11 megabits per second (Mbps), the IEEE 802.11a and 802.11g Standards specify a single-user peak throughput of 54 Mbps, and the IEEE 802.11n Standard specifies a single-user peak throughput of 600 Mbps. Work has begun on a new standard, IEEE 802.11ac, that promises to provide even greater throughput.

SUMMARY

[0020] According to one embodiment, a method for generating a data unit for transmission via a communication channel, wherein the data unit conforms to a first communication protocol, includes generating a preamble of the data unit. The preamble includes a first field having information that indicates a duration of the data unit, the first field being formatted such that the first field is decodable by a receiver device that conforms to a second communication protocol but does not conform to the first communication protocol to determine the duration of the data unit based on the first field. Additionally, the preamble is formatted such that a portion of the preamble is decodable by a receiver device that conforms to a third communication protocol but does not conform to the first communication protocol. Also, the preamble is formatted such that a receiver device that conforms to the first communication protocol can determine that the data unit conforms to the first communication protocol. The method further includes generating a data portion of the data unit that conforms to the first communication protocol and does not conform to either (i) the second communication protocol or (ii) the third communication protocol.

[0021] In other embodiments, one or more of the following features are also included.

[0022] A portion of the data unit that is decodable by the receiver device that conforms to the third communication protocol but does not conform to the first communication protocol includes the first field, and wherein the first field is formatted such that the first field is decodable by the receiver device that conforms to the third communication protocol but does not conform to the first communication protocol to determine the duration of the data unit based on the first field.

[0023] The first field of the preamble includes a rate subfield and a length subfield that indicate the duration of the data unit.

[0024] The first field of the preamble includes a subfield that is set to a value that contradicts the second communication protocol. The value of the first subfield that contradicts the second communication protocol indicates to the receiver device that conforms to the first communication protocol that the data unit conforms to the first communication protocol.

[0025] A second field of the preamble includes a subfield that is set to a value that contradicts the third communication protocol. The subfield that is set to the value that contradicts the third communication protocol indicates to the receiver device that conforms to the third communication protocol to

the wait until the energy of the data unit drops out before switching to a clear channel assessment (CCA) mode.

[0026] A second field of the preamble includes information that indicates the duration of the data unit, and wherein the portion of the preamble that is decodable by the receiver device that conforms to the third communication protocol but does not conform to the first communication protocol includes the second field.

[0027] A second field of the preamble is modulated using a modulation different than specified by the third communication protocol. The modulation of the second field different than specified by the third communication protocol indicates to the receiver device that conforms to the first communication protocol that the data unit conforms to the first communication protocol.

[0028] The data portion includes data for only a single receiver device.

[0029] The data portion includes independent data for a plurality of receiver devices.

[0030] The data portion has a cumulative bandwidth greater than a bandwidth specified by the second communication protocol and a maximum bandwidth specified by the third communication protocol.

[0031] The second communication protocol is the Institute for Electrical and Electronics Engineers (IEEE) 802.11a Standard.

[0032] The third communication protocol is the IEEE 802.11n Standard.

BRIEF DESCRIPTION OF THE DRAWINGS

[0033] FIG. **1** is a block diagram of an example wireless local area network (WLAN) **10**, according to an embodiment;

[0034] FIGS. **2**A and **2**B are diagrams of a prior art data unit format;

[0035] FIG. **3** is a diagram of another prior art data unit format;

[0036] FIG. **4** is a diagram of another prior art data unit format;

[0037] FIG. **5** is a diagram of an example data unit format, according to an embodiment;

[0038] FIG. **6** is a diagram of another example data unit format, according to an embodiment;

[0039] FIG. **7**A are diagrams of modulation used to modulate symbols in a prior art data unit;

[0040] FIG. **7**B are diagrams of modulation used to modulate symbols in an example data unit, according to an embodiment;

[0041] FIG. **7**C are diagrams of modulation used to modulate symbols in another example data unit, according to an embodiment;

[0042] FIG. **7**D are diagrams of modulation used to modulate symbols in another example data unit, according to an embodiment;

[0043] FIG. **7**E is a diagram of modulation used to modulate a symbol in another example data unit, according to an embodiment;

[0044] FIG. **8** is a diagram of tones in an orthogonal frequency division multiplexing (OFDM) symbol, according to an embodiment;

[0045] FIG. **9** is a diagram of another example data unit format, according to an embodiment;

[0046] FIG. **10** is a diagram of another example data unit format, according to an embodiment;

[0047] FIG. **11** is a diagram of another example data unit format, according to an embodiment;

[0048] FIGS. **12**A and **12**B are diagrams of modulation used to modulate symbols in two example data units, according to an embodiment;

[0049] FIG. **13** is a diagram of another example data unit format, according to an embodiment;

[0050] FIG. **14** is a diagram of another example data unit format, according to an embodiment;

[0051] FIG. **15** is a diagram of another example data unit format, according to an embodiment;

[0052] FIG. **16** is a diagram of an example field used in a data unit, according to an embodiment;

[0053] FIG. **17** is a diagram of another example data unit format, according to an embodiment;

[0054] FIG. **18** is a diagram of another example data unit format, according to an embodiment;

[0055] FIG. **19** is a diagram of another example data unit format, according to an embodiment;

[0056] FIG. **20** is a diagram of another example data unit format, according to an embodiment;

[0057] FIG. **21**A is a diagram of another example data unit, according to an embodiment;

[0058] FIG. **21**B are diagrams of modulation used to modulate symbols in the example data unit of FIG. **21**A, according to an embodiment;

[0059] FIG. **22** is a diagram of another example data unit, according to an embodiment;

[0060] FIG. **23** is a diagram of an example sounding data unit, according to an embodiment; and

[0061] FIG. **24** is a diagram of another example sounding data unit, according to an embodiment.

DETAILED DESCRIPTION

[0062] In embodiments described below, a wireless network device such as an access point (AP) of a wireless local area network (WLAN) transmits data streams to one or more client stations. The AP is configured to operate with client stations according to at least a first communication protocol. Similarly, different client stations in the vicinity of the AP may be configured to operate according to different communication protocols. When the AP transmits a data unit according to a first protocol, a preamble of the data is formatted such that a client station that operates according to a second protocol, and not the first protocol, is able to determine certain information regarding the data unit, such as a duration of the data unit, and/or that the data unit does not conform to the second protocol. Additionally, a preamble of the data unit is formatted such that a client station that operates according to the first protocol is able to determine the data unit conforms to the first protocol. Similarly, a client station configured to operate according to the first protocol also transmits data units such as described above.

[0063] Data units formatted such as described above may be useful, for example, with an AP that is configured to operate with client stations according to a plurality of different communication protocols and/or with WLANs in which a plurality of client stations operate according to a plurality of different communication protocols. Continuing with the example above, a communication device configured to operate according to both the first communication protocol and the second communication protocol is able to determine that the data unit is formatted according to the first communication protocol and not the second communication protocol.

Similarly, a communication device configured to operate according to the second communication protocol but not the first communication protocol is able to determine that the data unit is not formatted according to the second communication protocol and/or determine a duration of the data unit.

[0064] FIG. **1** is a block diagram of an example wireless local area network (WLAN) **10**, according to an embodiment. An AP **14** includes a host processor **15** coupled to a network interface **16**. The network interface **16** includes a medium access control (MAC) unit **18** and a physical layer (PHY) unit **20**. The PHY unit **20** includes a plurality of transceivers **21**, and the transceivers are coupled to a plurality of antennas **24**. Although three transceivers **21** and three antennas **24** are illustrated in FIG. **1**, the AP **14** can include different numbers (e.g., 1, 2, 4, 5, etc.) of transceivers **21** and antennas **24** in other embodiments. In one embodiment, the MAC unit **18** and the PHY unit **20** are configured to operate according to a first communication protocol (e.g., the IEEE 802.11ac Standard, now in the process of being standardized). In another embodiment, the MAC unit **18** and the PHY unit **20** are also configured to operate according to a second communication protocol (e.g., the IEEE 802.11n Standard). In yet another embodiment, the MAC unit **18** and the PHY unit **20** are additionally configured to operate according to the second communication protocol and a third communication protocol (e.g., the IEEE 802.11a Standard).

[0065] The WLAN **10** includes a plurality of client stations **25**. Although four client stations **25** are illustrated in FIG. **1**, the WLAN **10** can include different numbers (e.g., 1, 2, 3, 5, 6, etc.) of client stations **25** in various scenarios and embodiments. At least one of the client stations **25** (e.g., client station **25-1**) is configured to operate at least according to the first communication protocol. In some embodiments, at least one of the client stations **25** is not configured to operate according to the first communication protocol but is configured to operate according to at least one of the second communication protocol or the third communication protocol (referred to herein as a "legacy client station").

[0066] The client station **25-1** includes a host processor **26** coupled to a network interface **27**. The network interface **27** includes a MAC unit **28** and a PHY unit **29**. The PHY unit **29** includes a plurality of transceivers **30**, and the transceivers **30** are coupled to a plurality of antennas **34**. Although three transceivers **30** and three antennas **34** are illustrated in FIG. **1**, the client station **25-1** can include different numbers (e.g., 1, 2, 4, 5, etc.) of transceivers **30** and antennas **34** in other embodiments.

[0067] In an embodiment, one or both of the client stations **25-2** and **25-3**, has a structure the same as or similar to the client station **25-1**. In an embodiment, the client station **25-4**, has a structure similar to the client station **25-1**. In these embodiments, the client stations **25** structured the same as or similar to the client station **25-1** have the same or a different number of transceivers and antennas. For example, the client station **25-2** has only two transceivers and two antennas, according to an embodiment.

[0068] According to an embodiment, the client station **25-4** is a legacy client station, i.e., the client station **25-4** is not enabled to receive and fully decode a data unit that is transmitted by the AP **14** or another client station **25** according to the first communication protocol. Similarly, according to an embodiment, the legacy client station **25-4** is not enabled to transmit data units according to the first communication protocol. On the other hand, the legacy client station **25-4** is enabled to receive and fully decode and transmit data units according to the second communication protocol and/or the third communication protocol.

[0069] In various embodiments, the PHY unit **20** of the AP **14** is configured to generate data units conforming to the first communication protocol and having formats described hereinafter. The transceiver(s) **21** is/are configured to transmit the generated data units via the antenna(s) **24**. Similarly, the transceiver(s) **24** is/are configured to receive the data units via the antenna(s) **24**. The PHY unit **20** of the AP **14** is configured to process received data units conforming to the first communication protocol and having formats described hereinafter and to determine that such data units conform to the first communication protocol, according to various embodiments.

[0070] In various embodiments, the PHY unit **29** of the client device **25-1** is configured to generate data units conforming to the first communication protocol and having formats described hereinafter. The transceiver(s) **30** is/are configured to transmit the generated data units via the antenna(s) **34**. Similarly, the transceiver(s) **30** is/are configured to receive data units via the antenna(s) **34**. The PHY unit **29** of the client device **25-1** is configured to process received data units conforming to the first communication protocol and having formats described hereinafter and to determine that such data units conform to the first communication protocol, according to various embodiments.

[0071] FIG. **2**A is a diagram of a prior art data unit **60** that the legacy client station **25-4** is configured to transmit to the AP **14** via orthogonal frequency domain multiplexing (OFDM) modulation, according to an embodiment. The data unit **60** conforms to the IEEE 802.11a Standard and occupies a 20 Megahertz (MHz) band. The data unit **60** includes a preamble having a legacy short training field (L-STF) **62**, a legacy long training field (L-LTF) **64**, and a legacy signal field (L-SIG) **66**. The data unit **60** also includes a data portion **68**. FIG. **2**B is a diagram of an example data portion **68** (not low density parity check encoded), which includes a service field, a scrambled physical layer service data unit (PSDU), tail bits, and padding bits, if needed.

[0072] FIG. **3** is a diagram of a prior art OFDM data unit **78** that the legacy client station **25-4** is configured to transmit to the AP **14**, according to an embodiment. The data unit **78** conforms to the IEEE 802.11n Standard, occupies a 20 MHz band, and is designed for mixed mode situations, i.e., when the WLAN includes one or more client stations that conform to the IEEE 802.11a Standard but not the IEEE 802.11n Standard. The data unit **78** includes a preamble having an L-STF **80**, an L-LTF **81**, an L-SIG **82**, a high throughput signal field (HT-SIG) **83**, a high throughput short training field (HT-STF) **84**, N data high throughput long training fields (HT-LTFs) **85**, where N is an integer, and M extension HT-LTFs **86**, where M is an integer. The data unit **78** also includes a data portion **87**.

[0073] FIG. **4** is a diagram of a prior art OFDM data unit **90** that the legacy client station **25-4** is configured to transmit to the AP **14**, according to an embodiment. The data unit **90** conforms to the IEEE 802.11n Standard, occupies a 20 MHz band, and is designed for "Greenfield" situations, i.e., when the WLAN does not include any client stations that conform to the IEEE 802.11a Standard but not the IEEE 802.11n Standard. The data unit **90** includes a preamble having a high throughput Greenfield short training field (HT-GF-STF) **91**, a first high throughput long training field (HT-LTF**1**) **92**, a HT-SIG **93**, N data HT-LTFs **94**, where N is an integer, and M

extension HT-LTFs **95**, where M is an integer. The data unit **90** also includes a data portion **98**.

[0074] FIG. **5** is a diagram of an OFDM data unit **100** that the AP **14** is configured to transmit to the client station **25-1**, according to an embodiment. In an embodiment, the client station **25-1** is also configured to transmit the data unit **100** to the AP **14**. The data unit **100** conforms to the first communication protocol and occupies an 80 MHz band. In other embodiments, data units similar to the data unit **100** occupy different bandwidths such as 20 MHz, 40 MHz, 120 MHz, 160 MHz, or any suitable bandwidth. Additionally, the 80 MHz band need not be contiguous, but may include two or more smaller bands, such as two 40 MHz bands, separated in frequency. The data unit **100** is suitable for "mixed mode" situations, i.e., when the WLAN **10** includes a client station (i.e., the legacy client station **25-4**) that conforms to the IEEE 802.11a Standard and/or the IEEE 802.11n Standard, but not the first communication protocol. The data unit **100** can be utilized in other situations as well. The data unit **100** includes a preamble having four L-STFs **104**, four L-LTFs **108**, four L-SIGs **112**, four first very high throughput signal fields (VHT-SIG**1**) **116**, four second very high throughput signal fields (VHT-SIG**2**) **120**, a very high throughput short training field (VHT-STF) **124**, and N very high throughput long training fields (VHT-LTFs) **128**, where N is an integer. The data unit **100** also includes a data portion **140**. The L-STFs **104**, the L-LTFs **108**, and the L-SIGs **112** form a legacy portion. The VHT-STF **124**, the VHT-LTFs **128**, and the data portion **140** form a very high throughput (VHT) portion.

[0075] In the embodiment of FIG. **5**, each of the L-STFs **104**, each of the L-LTFs **108**, each of the L-SIGs **112**, each of the VHT-SIG**1**s, and each of the VHT-SIG**2**s occupy a 20 MHz band. In the present disclosure, several example data units, including the data unit **100**, having an 80 MHz contiguous bandwidth are described for the purposes of illustrating embodiments of frame formats, but these frame format embodiments and other embodiments are applicable to other suitable bandwidths (including noncontiguous bandwidths). For instance, although the preamble of FIG. **5** includes four of each of the L-STFs **104**, the L-LTFs **108**, the L-SIGs **112**, the VHT-SIG**1**s, and the VHT-SIG**2**s, in other embodiments in which the OFDM data unit occupies a cumulative bandwidth other than 80 MHz, such as 20 MHz, 40 MHz, 120 MHz, 160 MHz, etc., a different suitable number of the L-STFs **104**, the L-LTFs **108**, the L-SIGs **112**, the VHT-SIG**1**s, and the VHT-SIG**2**s is utilized accordingly (e.g., one of each of the L-STFs **104**, the L-LTFs **108**, the L-SIGs **112**, the VHT-SIG**1**s, and the VHT-SIG**2**s for an OFDM data unit occupying 20 MHz, two of each of the fields for a 40 MHz bandwidth OFDM data unit, six of each of the fields for a 120 MHz bandwidth OFDM data unit, and eight of each of the fields for a 160 MHz bandwidth OFDM data unit). Also in 80 MHz and 160 MHz bandwidth OFDM data units, for example, the band is not contiguous in frequency, in some embodiments and situations. Thus, for example, the L-STFs **104**, the L-LTFs **108**, the L-SIGs **112**, the VHT-SIG**1**s, and the VHT-SIG**2**s occupy two or more bands that are separated from each other in frequency, and adjacent bands are separated in frequency by at least one MHz, at least five MHz, at least 10 MHz, at least 20 MHz, for example, in some embodiments. In the embodiment of FIG. **5**, each of the STF **124**, the VHT-LTFs **128**, and the data portion **140** occupy an 80 MHz band. If the data unit conforming to the first communication protocol is an OFDM data unit that occupies a cumulative bandwidth such as 20 MHz, 40 MHz, 120 MHz, or 160 MHz OFDM, the VHT-STF, VHT-LTFs and VHT data portion occupy the corresponding whole bandwidth of the data unit, according to an embodiment.

[0076] In an embodiment, each of the L-STFs **104** and each of the L-LTFs **108** have a format as specified in the IEEE 802.11a Standard and/or the IEEE 802.11n Standard. In an embodiment, each of the L-SIGs **112** has a format at least substantially as specified in the IEEE 802.11a Standard and/or the IEEE 802.11n Standard. The length and rate subfields in the L-SIGs **112** are set to indicate the duration T corresponding to remainder of the data unit **100** after the legacy portion. This permits client devices that are not configured according to the first communication protocol to determine an end of the data unit **100**, for carrier sense multiple access/collision avoidance (CSMA/CA) purposes, for example. For instance, a legacy client device configured according to the IEEE 802.11a Standard will detect a data error from VHT-SIG**1** field, according to the receiver state machine specified in the IEEE 802.11a Standard. Further according to the IEEE 802.11a Standard, the legacy client device will wait until the end of a computed packet duration (T) before performing clear channel assessment (CCA).

[0077] The frequency domain symbols of the legacy portion are repeated over four 20 MHz sub-bands of the 80 MHz band. Legacy client devices that are configured according to the IEEE 802.11a Standard and/or the IEEE 802.11n Standard with 20 MHz bandwidth will recognize a legacy IEEE 802.11a Standard preamble in any of the 20 MHz sub-bands. In some embodiments, the modulation of different 20 MHz sub-bands signals is rotated by different angles. For example, in one embodiment, a first subband is rotated 0-degrees, a second subband is rotated 90-degrees, a third sub-band is rotated 180-degrees, and a fourth sub-band is rotated 270-degrees. In other embodiments, different suitable rotations are utilized. As just one example, a first sub-band is rotated 45-degrees, a second sub-band is rotated 90-degrees, a third sub-band is rotated −45-degrees, and a fourth sub-band is rotated −90-degrees.

[0078] In one embodiment, each of the L-SIGs **112** has a format at least substantially as specified in the IEEE 802.11a Standard and/or the IEEE 802.11n Standard except that the "reserved" bit is set to 1, whereas the IEEE 802.11a Standard and the IEEE 802.11n Standard specify that the "reserved" bit is set to 0. By setting the "reserved" bit to 1, this signals devices that conform to the first communication protocol that the data unit **100** conforms to the first communication protocol, for example. In other embodiments, the "reserved" bit to 0.

[0079] In one embodiment, each of the VHT-SIG**1**s, and each of the VHT-SIG**2**s has a format at least substantially the same as the HT-SIG**1** and the HT-SIG**2** fields specified in the IEEE 802.11n Standard. For example, a modulation and coding scheme (MCS) field in VHT-SIG**1** and/or VHT-SIG**2** is the same as the MCS field in HT-SIG, but applied to an 80 MHz band. In one embodiment, MCS **32** is disallowed for VHT data units such as the data unit **100**. In other embodiments, MCS **32** is allowed for VHT data units such as the data unit **100**.

[0080] In some embodiments, the format and/or modulation of VHT-SIG**1** and/or VHT-SIG**2** is at least different to cause a legacy device operating according to the IEEE 802.11n Standard to detect an error, such as a cyclic redundancy check (CRC) error. Further according to the IEEE 802.11n

Standard, the legacy client device will wait until the energy of the data unit **100** drops out before switching to CCA idle mode.

[0081] In some embodiments, the modulation of the VHT-SIG**1**s and/or the VHT-SIG**2**s in the different 20 MHz sub-bands signals is rotated by different angles. For example, in one embodiment, a first sub-band is rotated 0-degrees, a second sub-band is rotated 90-degrees, a third sub-band is rotated 180-degrees, and a fourth sub-band is rotated 270-degrees. In other embodiments, different suitable rotations are utilized. As just one example, a first sub-band is rotated 45-degrees, a second sub-band is rotated 90-degrees, a third sub-band is rotated −45-degrees, and a fourth sub-band is rotated −90-degrees. In an embodiment, the same rotation utilized in the legacy portion (if any) is utilized for the VHT-SIG**1**s and the VHT-SIG**2**s.

[0082] In one embodiment, the "reserved" bit (as specified for HT-SIG in the IEEE 802.11n Standard) in VHT-SIG**2** is set to 0, whereas the IEEE 802.11n Standard defines the reserved bit in HT-SIG is set to 1), to signal to a device configured according to the first communication protocol that the data unit **100** conforms to the first communication protocol. In other embodiments, the "reserved" bit (as specified for HT-SIG in the IEEE 802.11n Standard) in VHT-SIG**2** is set to 1.

[0083] In some embodiments, each of the VHT-SIG**1**s and each of the VHT-SIG**2**s have a format not substantially the same as the HT-SIG**1** and the HT-SIG**2** fields specified in the IEEE 802.11n Standard. For example, the subfield in HT-SIG "BW20/40" as defined in the IEEE 802.11n Standard is omitted, or is combined with the reserved bit to select 20, 40, or 80 MHz bandwidth, according to an embodiment. As another example, the subfield "aggregated" as defined in the IEEE 802.11n Standard is omitted. In an embodiment, differences in the formats of the VHT-SIG fields and the HT-SIG fields defined in the IEEE 802.11n Standard will cause a legacy device configured according to the IEEE 802.11n Standard to detect an error, such as a CRC error, upon receiving a VHT-SIG field.

[0084] FIG. **6** a diagram of an OFDM data unit **150** that the AP **14** is configured to transmit to the client station **25-1**, according to an embodiment. In an embodiment, the client station **25-1** is also configured to transmit the data unit **150** to the AP **14**. The data unit **150** is the same as the data unit **100** of FIG. **5**, except that the data unit **150** includes third very high throughput signal fields (VHT-SIG**3**s) **154** to convey physical layer (PHY) information. In the embodiment of FIG. **6**, a CRC may cover each VHT-SIG**1**, VHT-SIG**3**, VHT-SIG**3** tuple. In an embodiment, the CRC that covers the VHT-SIG**1**, VHT-SIG**3**, VHT-SIG**3** tuple is the same as defined for HT-SIG in the IEEE 802.11n Standard.

[0085] In an embodiment, the 3 VHT-SIG subfield formats are substantially different from HT-SIG fields in the IEEE 802.11n Standard (e.g. use 2 bits to signal 20/40/80 MHz bandwidth, or no indication of 20/40/80 MHz in an implementation that only 80 MHz is allowed for VHT packets). In an embodiment, the same CRC check as in HT-SIG specified by the IEEE 802.11n Standard is moved to VHT-SIG**3**, and the CRC checks the correctness of the data in all the 3 VHT-SIG fields.

[0086] FIG. **7**A is a set of diagrams illustrating modulation of the L-SIG, HT-SIG**1**, and HT-SIG**2** fields as defined by the IEEE 802.11n Standard. The L-SIG field is modulated according to binary phase shift keying (BPSK), whereas the HT-SIG**1** and HT-SIG**2** fields are modulated according to BPSK, but on the quadrature axis (Q-BPSK). In other words, the modulation of the HT-SIG**1** and HT-SIG**2** fields is rotated by 90 degrees as compared to the modulation of the L-SIG field.

[0087] FIG. **7**B is a set of diagrams illustrating modulation of the L-SIG, VHT-SIG**1**, and VHT-SIG**2** fields of the data unit **100** of FIG. **5**, according to an embodiment. Similar to the HT-SIG**1** field in FIG. **7**A, the VHT-SIG**1** field is rotated by 90 degrees as compared to the modulation of the L-SIG field. On the other hand, unlike the HT-SIG**2** field of FIG. **7**A, the VHT-SIG**2** field is the same as the modulation of the L-SIG field. In an embodiment, the different modulation of the VHT-SIG**2** field and the HT-SIG**2** field defined in the IEEE 802.11n Standard will cause a legacy device configured according to the IEEE 802.11n Standard to detect an error, such as a CRC error, upon receiving a VHT-SIG**2** field. Additionally, the different modulation of the VHT-SIG**2** field and the HT-SIG**2** field defined in the IEEE 802.11n Standard will permit a device configured according to the first communication protocol to determine that the data unit **100** conforms to the first communication protocol.

[0088] In other embodiments, the VHT-SIG**2** field is rotated by 90 degrees as compared to the modulation of the L-SIG field, similar to the HT-SIG**2** field of FIG. **7**A.

[0089] FIG. **7**C is a set of diagrams illustrating modulation of the L-SIG, VHT-SIG**1**, VHT-SIG**2**, and VHT-SIG**3** fields of the data unit **150** of FIG. **6**, according to an embodiment. Similar to the HT-SIG**1** field in FIG. **7**A, the VHT-SIG**1** field is rotated by 90 degrees as compared to the modulation of the L-SIG field. On the other hand, unlike the HT-SIG**2** field of FIG. **7**A, the VHT-SIG**2** field is the same as the modulation of the L-SIG field. Additionally, the VHT-SIG**3** field is the same as the modulation of the L-SIG field. In an embodiment, the different modulation of the VHT-SIG**2** field and the HT-SIG**2** field defined in the IEEE 802.11n Standard will cause a legacy device configured according to the IEEE 802.11n Standard to detect an error, such as a CRC error, upon receiving a VHT-SIG**2** field. Additionally, the different modulation of the VHT-SIG**2** field and the HT-SIG**2** field defined in the IEEE 802.11n Standard will permit a device configured according to the first communication protocol to determine that the data unit **150** conforms to the first communication protocol.

[0090] In other embodiments, the VHT-SIG**2** field is rotated by 90 degrees as compared to the modulation of the L-SIG field, similar to the HT-SIG**2** field of FIG. **7**A. In other embodiments, the VHT-SIG**3** field is rotated by 90 degrees as compared to the modulation of the L-SIG field.

[0091] Referring to FIGS. **5** and **6**, each VHT-SIG is modulated by one OFDM symbol, according to an embodiment.

[0092] If the VHT-SIG fields in the data units as described in FIGS. **5** and **6**, utilizes the modulations as described in FIGS. **7**B and **7**C, in these embodiments, a device that conforms to the IEEE 802.11a Standard will set CCA idle duration according to the L-SIG field. A device that conforms to the IEEE 802.11n Standard (also compatible with the IEEE 802.11a Standard) will assume, at least in some circumstances, that the data unit is a data unit that conforms to the IEEE 802.11n standard (since VHT-SIG**1** is modulated the same way as HT-SIG**1**), but may fail decoding the assumed two "HT-SIG" fields since the VHT-SIG**2** is modulated different from HT-SIG**2**. In this case, the IEEE 802.11n conforming device may set CCA idle duration according to the L-SIG field, or set CCA idle duration according to the energy

of the data unit (i.e. reset CCA when the over-the-air energy of the data unit drops down to a certain level—meaning the data unit ends). Devices that conform to the first communication protocol will determine that the data unit conforms to the first communication protocol by one or more of detecting the "reserved bit" in the L-SIG field, detecting the "reserved bit" in the VHT-SIG field, detecting modulation of the VHT-SIG fields, etc., depending on the particular embodiment.

[0093] In some embodiment, the VHT-SIG fields are modulated differently than as shown in FIGS. **7**B and **7**C. In the above mentioned VHT signaling approaches that change the constellation points of the VHT_SIG fields located immediately after the L-SIG field (i.e. FIGS. **5** and **6**) to signal that the data unit conforms to the first communication protocol, generally any suitable change to the VHT-SIG fields modulation that is different from modulation from the HT-SIG fields in the IEEE 802.11n Standard, or any changes on L-SIG modulation that is different from L-SIG in the IEEE 802.11n and the IEEE 802.11n Standards can be utilized. Different from FIG. **7**B or **7**C, in an embodiment, any suitable modulation in VHT-SIG**1** is utilized so that a device that conforms to the IEEE 802.11n Standard will assume the data unit is not an HT data unit (e.g., the average Q energy of the constellation is not significantly larger than 1 energy as defined in the IEEE 802.11n Standard for the HT-SIG field) but rather assumes that data unit is an IEEE 802.11a data unit, and thus treats the data unit as an IEEE 802.11a data unit. In this case, although the IEEE 802.11n conforming device may not decode the data unit correctly, it will set CCA idle duration correctly according to the L-SIG field. Further, a device that conforms to the first communication protocol can determine that the data unit conforms to the first communication protocol by one or more of detecting the "reserved bit" in the L-SIG field, detecting the "reserved bit" in the VHT-SIG field, detecting modulation of the VHT-SIG fields, etc., depending on the particular embodiment.

[0094] For example, in one embodiment, all of the VHT-SIG symbols are modulated using BPSK. As another example, the first VHT-SIG symbol is BPSK, and the remaining symbols are modulated using Q-BPSK. FIG. **7**D is a set of diagrams illustrating modulation of the L-SIG, VHT-SIG**1**, and VHT-SIG**2** fields of the data unit **100** of FIG. **5**, according to an embodiment. Unlike the HT-SIG**1** field in FIG. **7**A, the VHT-SIG**1** field is not rotated by 90 degrees as compared to the modulation of the L-SIG field (i.e., the VHT-SIG**1** field is BPSK modulated). On the other hand, like the HT-SIG**2** field of FIG. **7**A, the VHT-SIG**2** field is rotated by 90 degrees as compared to the modulation of the L-SIG field. In the embodiment of FIG. **7**D, devices conforming to the IEEE 802.11n Standard will treat the data unit as an IEEE 802.11a data unit, because the modulation of the VHT-SIG**1** field is not BPSK, as specified by the IEEE 802.11n standard. In this embodiment, the device conforming to the IEEE 802.11n Standard will set the CCA idle duration according to L-SIG. The modulation of FIG. **7**D can also be used with the data unit **150** of FIG. **6**, and FIG. **7**E is a diagram of modulation for the VHT-SIG**3** field of FIG. **6**, according to an embodiment. In another embodiment, all or the first or some of the VHT-SIG symbols are modulated with neither BPSK, nor Q-BPSK. For example, VHT-SIG**1** or VHT-SIG**2** or all the VHT-SIGs are modulated with 45-deg rotated BPSK. As another example, VHT-SIG**1** or VHT-SIG**2** or all the VHT-SIGs are modulated with R*45-deg rotated BPSK, wherein R=1, 2, or 3. As another example, VHT-SIG**1** or VHT-SIG**2** or all the VHT-SIGs are modulated with BPSK and Q-BPSK alternatively or not alternatively but in a predetermined manner (e.g. any N tones using Q-BPSK, the other 52-N tones using BPSK) across the data and pilot tones (52 tones in each 20 MHz sub-band) i.e., a predetermined mapping of the tones for BPSK and Q-BPSK modulations.

[0095] The VHT-STF, VHT-LTFs, and VHT-Data OFDM symbols are defined similar to HT-STF, HT-LTFs and HT-Data as in the IEEE 802.11n Standard, except that each OFDM symbol is defined over 80 MHz bandwidth, according to an embodiment. In other embodiments, each OFDM symbol is defined over other suitable bandwidths, such as 20 MHz, 40 MHz, 160 MHz, etc. In the case of an 80 MHz OFDM symbol, a 256 point inverse fast Fourier transform (IFFT) and a 256 point fast Fourier transform (FFT) is utilized for 80 MHz bandwidth transmissions. In an embodiment, the OFDM duration is 3.6 microseconds (ns) for a short guard interval (GI) and 4 ns for a long GI.

[0096] If the constraint on the maximum number of space-time streams is the same as in the IEEE 802.11n Standard, then the spatial mapping P matrix in VHT-STFs, and VHT-LTFs, signal shaping such as frequency cyclic shift diversity (CSD), etc., are substantially the same as the IEEE 802.11n Standard, (e.g., extended to an 80 MHz band), according to an embodiment.

[0097] For an 80 MHz OFDM signal, the symbols in the tones of VHT-STF and VHT-LTFs, the assignment of data tone numbers/positions, guard tones around edge bands and direct current (DC) tones, number/position/content of pilot tones, and the frequency interleaver, are configured differently from 20 MHz bandwidth and 40 MHz bandwidth legacy signals in the IEEE 802.11a Standard and the IEEE 802.11n Standard.

[0098] Pilots will not be present for VHT-STF and VHT-LTFs as in the IEEE 802.11a Standard and the IEEE 802.11n Standard, according to an embodiment.

[0099] FIG. **8** is a diagram illustrating an example OFDM tone structure for an 80 MHz OFDM symbol for the VHT-data portions of FIGS. **5** and **6**, according to an embodiment. An OFDM symbol **180** includes a group **184** of zero tones at a lower frequency end, a group **188** of zero tones at a center section, and a group **192** of zero tones at an upper frequency end. Data and pilot tones are located between the groups of zero tones.

[0100] FIG. **9** is a diagram of an OFDM data unit **200** that the AP **14** is configured to transmit to the client station **25-1**, according to an embodiment. In an embodiment, the client station **25-1** is also configured to transmit the data unit **200** to the AP **14**. The data unit **200** conforms to the first communication protocol and occupies an 80 MHz band. In other embodiments, data units similar to the data unit **200** occupy different bandwidths such as 20 MHz, 40 MHz, 120 MHz, 160 MHz, or any suitable bandwidth. Additionally, the band in which the OFDM data unit is transmitted need not be contiguous, but may include two or more smaller bands separated in frequency. In an embodiment in which the OFDM data unit **200** has an 80 MHz bandwidth, for example, the OFDM data unit **200** may occupy two separate 40 MHz bands, separated in frequency. The data unit **200** is suitable for "Greenfield" situations, i.e., when the WLAN **10** does not include any client stations (i.e., the legacy client station **25-4**) that conforms to the IEEE 802.11a Standard and/or the IEEE 802.11n Standard, but not the first communication protocol. The data unit **200** can be utilized in other situations as well.

For example, is some embodiments, the data unit **200** can be utilized i.e., when the WLAN **10** does not include any client stations that conforms to the IEEE 802.11a Standard but not the first communication protocol, but includes one or more client stations that conform to the IEEE 802.11n Standard but not the first communication protocol.

[0101] The data unit **200** is similar to the data unit **100** of FIG. **5**, but omits the legacy portion. Additionally, the VHT-STF **124** and the first VHT-LTF **128-1** occur before the VHT-SIG**1**s **116** and the VHT-SIG**2**s **120**. Otherwise, the VHT-SIG**1**s **116**, the VHT-SIG**2**s **120**, the VHT-STF **124**, and the VHT-LTFs **128** are the same as described above with respect to FIGS. **5** and **6**. For example, in an embodiment in which the modulations in VHT-SIG fields in FIG. **9** are as in FIG. **7**B or **7**C, a legacy client configured according to the IEEE 802.11n Standard will interpret the VHT-SIG**1**s **116** and the VHT-SIG**2**s **120** as HT-SIG**1**s and HT-SIG**2**s, but will generate a CRC error. In another embodiment, when the modulations in VHT-SIG fields in FIG. **9** are as in FIG. **7**D, a legacy client configured according to the IEEE 802.11n Standard will interpret the VHT-SIG**1**s **116** and the VHT-SIG**2**s **120** as L-SIGs and HT-SIG**1**s respectively, but will generate a CRC error. In general, the Greenfield data unit **200** is designed for utilization in a network having only devices that conform to the first communication protocol, and not including any legacy devices. In some situations, however, the Greenfield data unit **200** may be transmitted in a network having one or more legacy devices.

[0102] FIG. **10** is a diagram of an OFDM data unit **250** that the AP **14** is configured to transmit to the client station **25-1**, according to an embodiment. In an embodiment, the client station **25-1** is also configured to transmit the data unit **250** to the AP **14**. The data unit **250** conforms to the first communication protocol and occupies an 80 MHz band. In other embodiments, data units similar to the data unit **200** occupy different bandwidths such as 20 MHz, 40 MHz, 120 MHz, 160 MHz, or any suitable bandwidth. Additionally, the 80 MHz band need not be contiguous, but may include two or more smaller bands, such as two 40 MHz bands, separated in frequency. The data unit **250** is suitable for "mixed mode" situations, i.e., when the WLAN **10** includes at least one client station (i.e., the legacy client station **25-4**) that conforms to the IEEE 802.11a Standard and/or the IEEE 802.11n Standard, but not the first communication protocol. The data unit **250** can be utilized in other situations as well. For example, is some embodiments, the data unit **250** can be utilized i.e., when the WLAN **10** does not include any client stations that conforms to the IEEE 802.11a Standard but not the first communication protocol, but includes one or more client stations that conform to the IEEE 802.11n Standard but not the first communication protocol.

[0103] The data unit **250** is similar to the data unit **100** of FIG. **5**, but includes HT-SIG**1**s **254** and HT-SIG**2**s **258**. Further, the rate and length fields in the L-SIGs are set according to the duration T**1**, which includes the HT-SIG**1**s **254** and the HT-SIG**2**s **258**.

[0104] In an embodiment, the "HT-Length" field, the "MCS" field, the space-time coding block (STBC) field, etc., in the HT-SIG**1** **254** are set so that a device configured according to the IEEE 802.11n Standard will compute the true duration of the data unit **250**. In an embodiment, the "reserved" bit in the HT-SIG**1**s **254** and/or the HT-SIG**2**s **258** is set to "0" to signal devices that conform to the first communication protocol that the data unit **250** conforms to the first communication protocol. Additionally, when the "reserved" bit in the HT-SIG**2**s **258** is set to "0", a device configured according to the IEEE 802.11n Standard will determine "carrier lost" after decoding HT-SIG**2**. According to the state machine defined in the IEEE 802.11n Standard, the 802.11n device will hold CCA until the end of the duration computed according to the "HT-Length" field, the "MCS" field, the STBC field, etc.

[0105] The VHT-SIG**1**s **116** and the VHT-SIG**2**s **120** have a different format than the HT-SIG**1**s **254** and the HT-SIG**2**s **258**, in an embodiment.

[0106] FIG. **11** is a diagram of an OFDM data unit **270** that the AP **14** is configured to transmit to the client station **25-1**, according to an embodiment. In an embodiment, the client station **25-1** is also configured to transmit the data unit **270** to the AP **14**. The data unit **250** conforms to the first communication protocol and occupies an 80 MHz band. In other embodiments, data units similar to the data unit **200** occupy different bandwidths such as 20 MHz, 40 MHz, 120 MHz, 160 MHz, or any suitable bandwidth. Additionally, the 80 MHz band need not be contiguous, but may include two or more smaller bands, such as two 40 MHz bands, separated in frequency. The data unit **270** is suitable for "mixed mode" situations in which the WLAN **10** includes at least one client station (i.e., the legacy client station **25-4**) that conforms to the IEEE 802.11n Standard, but not the first communication protocol, but the WLAN **10** does not include any client stations that conforms to the IEEE 802.11a Standard but not IEEE 802.11n Standard and not the first communication protocol. The data unit **270** can be utilized in other situations as well.

[0107] The data unit **270** is similar to the data unit **200** of FIG. **9**, but includes HT-SIG**1**s **274** and HT-SIG**2**s **278**. The HT-SIG**1**s **274** and HT-SIG**2**s **278** are configured the same as the HT-SIG**1**s **254** and HT-SIG**2**s **258** described with reference to FIG. **10**, according to an embodiment. The VHT-SIG**1**s **116** and the VHT-SIG**2**s **120** have a different format than the HT-SIG**1**s **274** and the HT-SIG**2**s **278**, in an embodiment.

[0108] The example data unit formats and signaling approaches (e.g., L-SIG subfield (reserved bit) changes from the IEEE 802.11a and the IEEE 802.11n Standards, VHT-SIG subfield changes, and modulation changes from HT-SIG in the IEEE 802.11n Standard) described in this disclosure may be used to signal to a device that conforms to the first communication protocol that the data unit conforms to the first communication protocol, that the data unit includes VHT-SIG fields, etc. For data units that conform to the first communication protocol and have a bandwidth less than 80 MHz (e.g., 40 MHz or 20 MHz), such data units can utilize a similar preamble. For 40 MHz wide data units, the data unit preamble that conforms to the first communication protocol has an upper frequency and lower frequency duplication structure similar to or the same as described in the IEEE 802.11n Standard, according to an embodiment.

[0109] In some embodiments similar to the embodiments described above with respect to FIGS. **5**, **6**, and **10**, the "Rate" subfield in the L-SIG field is set to "1101" to indicate 6 megabits per second (Mbps), and the and set "Length" subfield is set according to T or T**1**, for legacy device spoofing. In these embodiments, a device that conforms to the IEEE 802.11a Standard will set CCA idle duration according to the L-SIG field. A device that conforms to the IEEE 802.11n Standard (also compatible with the IEEE 802.11a Standard)

will assume that the data unit is a data unit that conforms to the IEEE 802.11a Standard, and will set CCA idle duration according to the L-SIG field. Devices that conform to the first communication protocol will determine that the data unit conforms to the first communication protocol by one or more of detecting the "reserved bit" in the L-SIG field, detecting the "reserved bit" in the VHT-SIG field, detecting modulation of the VHT-SIG fields, etc., depending on the particular embodiment.

[0110] In an embodiment in which the VHT-SIG**1** field is modulated using BPSK as in FIG. **7**D, a station that conforms to the first communication protocol will determine that the data unit does not conform to the IEEE 802.11n Standard, and that the current packet could be either an IEEE 802.11a data unit or a data unit that conforms to the first communication protocol. A station that conforms to the first communication protocol will determine that the OFDM symbol at the position of VHT-SIG**1** could be either IEEE 802.11a data or a VHT-SIG**1** conforming to the first communication protocol, but both are modulated using 6 Mbps (as indicated by L-SIG).

[0111] In embodiments in which signaling in VHT-SIG**2** is utilized, after a station that conforms to the first communication protocol detects that the data unit conforms to the first communication protocol at VHT-SIG**2** (e.g., with the modulation of FIG. **7**D, in an embodiment), the device combines VHT-SIG**1** and VHT-SIG**2** decoded bits to check CRC and get PHY parameters, according to an embodiment.

[0112] In some embodiments, MAC protection of transmission of Greenfield data units are utilized within a basic service set (BSS).

[0113] If there are two or three OFDM symbols in VHT-SIG (e.g., a VHT-SIG**1** and a VHT-SIG**2**, and a VHT-SIG**3** in some embodiments), a device conforming to the first communication protocol can differentiate a green field data unit such as shown in FIGS. **9** and **11** from an IEEE 802.11n Standard mixed mode data unit, by comparing the modulations at the position of VHT-SIG fields, according to some embodiments.

[0114] In some embodiments, VHT-SIG modulation in mixed mode and Greenfield mode are different. FIGS. **12**A and **12**B are diagrams that illustrate modulation of the VHT-SIG fields in mixed mode and Greenfield mode, respectively, according to one embodiment. In the embodiment of FIGS. **12**A and **12**B, VHT-SIG**1** and VHT-SIG**2** are modulated using BPSK and Q-BPSK, respectively, in mixed mode, whereas VHT-SIG**1** and VHT-SIG**2** are modulated using Q-BPSK and BPSK, respectively, in Greenfield mode. FIGS. **12**A and **12**B may be applied for the modulations of the VHT-SIG fields in FIGS. **5** and **6** for mixed mode, and FIGS. **9** and **11** for Greenfield.

[0115] In the above mentioned VHT signaling (i.e., signaling a data unit conforms to the first communication protocol) approaches in non HT-spoofing modes (i.e., not spoofing IEEE 802.11n Standard data units), and in some embodiments, the modulations of VHT_SIG fields are the same as the HT_SIG fields in the IEEE 802.11n Standard, but the content of VHT_SIG fields will be different from HT-SIG of the IEEE 802.11n Standard, so that a device conforming to the IEEE 802.11n Standard will determine an error in the IEEE 802.11n Standard CRC check of the VHT-SIG fields (i.e., the IEEE 802.11n Standard device will perform a CRC check on the VHT-SIG fields assuming they are HT-SIG fields). For example, in one embodiment, more than 2 VHT-SIG symbols are utilized, so the CRC for the first communication protocol is redesigned to cover all of the more than two VHT-SIG fields. In another embodiment, the position/length/coding method (e.g. the initial states of the CRC logic) of the CRC bits in VHT-SIG**1** and **2** are replaced, and the content of the VHT-SIG fields is different from HT-SIG fields.

[0116] In some embodiments, the VHT-STF and/or one or more VHT-LTF symbols may be repeated two or more times (e.g., for the purpose of more reliable channel estimation, frequency synchronization, automatic gain control (AGC) refinements, etc.). For example, in Greenfield mode data units, the VHT-STF and the first VHT-LTF symbol may be repeated two times each as shown in FIG. **13**, which is preamble **300**, according to an embodiment. The preamble **300** is similar to the preamble of FIG. **9**, but includes two VHT-STFs **124-1**, **124-2**, two VHT-SIG**1**s, **128-1***a*, **128-1***b*, and M VHT-SIG fields, where M is an integer greater than or equal to two.

[0117] In some embodiments, the VHT-STF and/or one or more VHT-LTF symbols may be extended beyond 4 μs. For example, in some embodiments, the VHT-STF is extended to 8 μs. FIG. **14** is a Fig diagram of an OFDM data unit **330** that the AP **14** is configured to transmit to the client station **25-1**, according to an embodiment. The data unit **330** is similar to the data unit **100** of FIG. **5**, but with a VHT-STF field **334** that is extended to 8 μs. Additionally, in some embodiment, a cyclic prefix (CP) of one or more VHT-LTF symbols is extended to 1.6 μs. FIG. **15** is a diagram of an OFDM data unit **340** that the AP **14** is configured to transmit to the client station **25-1**, according to an embodiment. The data unit **340** is similar to the data unit **330** of FIG. **14**, but with a first VHT-LTF field **344** that includes a CP extended to 1.6 μs. In some embodiments, repetition of VHT-STF and/or VHT-LTFs is similar to repetition of the L-LTF field as described in the IEEE 802.11n Standard. For example, a single CP (e.g. 0.8 μs) or double-length CP (1.6 μs) is followed by two repetitions of an OFDM symbol of VHT-STF or VHT-LTF. FIG. **16** is a diagram illustrating repetition of two VHT-LTF symbols with a single CP for the two VHT-LTF symbols. The CP is 0.8 μs in some embodiments, and is 1.6 μs in other embodiments.

[0118] In some embodiments, the training sequences used for the VHT-STF and the VHT-LTFs are defined differently from those in the IEEE 802.11n Standard. For example, if in VHT-STF and/or VHT-LTF, a pilot $P_{s,n}^{(k)}$ is transmitted on the k-th subcarrier for the n-th training symbol at the s-th spatial stream, the VHT-STF and/or the VHT-LTF can be expressed as (expression before spatial mapping) $P^{(k)}s(k)$, where s(k) is the training STF or LTF symbol at the k-th subcarrier. The matrix $P^{(k)}$ used for the k-th subcarrier may be any invertible matrix that is known at both the transmitter and the receiver. As just one example of a P matrix, the P vectors for different streams are interleaved in the same VHT-LTF. In another example of a P matrix, in the embodiment of repeated VHT-STFs and/or VHT-LTFs, columns of the P matrix are repeated x times, if x-time repetition is applied for the VHT-STFs or VHT-LTFs.

[0119] In some embodiments, one or more of space division multiple access (SDMA), orthogonal frequency domain multiple access (OFDMA), etc., may be utilized in the first communication protocol. In these embodiments, one or more VHT-SIG fields contain subfield(s) that indicate whether the data unit is part of an SDMA/OFDMA transmission (e.g., whether the VHT-SIG field corresponds to one subspace of SDMA, or one sub-band of OFDMA). In the case of SDMA or OFDMA transmissions, all of the intended receivers

should hold their respective CCAs until the end of transmission of the entire data unit, and should not send acknowledgment (ACK) data units until the end of the entire data unit. Since the different data streams in the data unit to the different receivers may have different lengths, the CCA should be held high till the end of the longest data stream.

[0120] In an embodiment, the transmitter indicates the duration of the longest data stream in the data unit in the LENGTH field of the L-SIG in mixed mode, or in a subfield of a VHT-SIG in Greenfield mode. The mentioned subfield in VHT-SIG indicates to the receiver that the current packet is part of an SDMA or OFDMA data unit, so the receiver should hold CCA for appropriate amount of time (e.g. according to the duration as indicated in length field in L-SIG in mixed mode). In another embodiment, MAC signaling is utilized to inform the receiver of the entire length of the SDMA/OFDMA data unit.

[0121] Compared with the mixed mode preamble in the IEEE 802.11n Standard, the preamble of at least some data units conforming to the first communication protocol may be made shorter, but still backward compatible with the IEEE 802.11a and IEEE 802.11n Standards. In an embodiment, a Greenfield-like preamble is utilized, but with L-SIG fields inserted before the VHT-SIG fields. FIG. **17** is a diagram of an example preamble, according to an embodiment. L-SIG fields inserted before the three sets of VHT-SIG fields. In another embodiment, the VHT-SIG**3** fields are omitted. In the data unit **350**, the modulations of the VHT-SIG fields is the same as those described in FIGS. **5** and **6**, e.g., as illustrated in FIGS. **7**B-**7**E, in various embodiments. In an embodiment, the spatial mapping approach of L-SIG is in the same way as VHT-SIG field (e.g. the single stream L-SIG is mapped to N_{TX} transmit antennas by a matrix QP_1, where Q is the spatial mapping matrix applied to the VHT data, and P_1 is the first column of the P matrix as introduced above or as in the IEEE 802.11n Standard), and the modulation/coding of L-SIG is the same as the SIG field of the IEEE 802.11a Standard. In this embodiment, a receiver can use VHT-LTF**1** as the channel estimation to demodulate the L-SIG field, as it does on demodulating VHT-SIG field for the example Greenfield mode preambles described above. In one embodiment, devices that transmit data units according to the first communication protocol utilize data unit preambles such as in FIG. **17** for Greenfield mode. In one embodiment, "spoofing" is applied by the duration T**1** (determined according to rate and length fields in L-SIG, and the reserved bit of L-SIG is set to 1 to signal that the data unit conforms to the first communication protocol. In other embodiments, various modulation and numbers of OFDM symbols of VHT-SIG fields, and the format/length of VHT-STF and VHT-LTF fields such as described above are utilized.

[0122] In embodiments utilizing a preamble such as in FIG. **17**, and if the LTS symbol duplicates 20 MHz L-LTS symbols in each 20 MHz sub-band and non-zero values are utilized in the tones corresponding to IEEE 802.11n Standard legacy "DC/Guard tones" in each sub-band of L-LTS, then a receiver, when decoding L-SIG and VHT-SIG in one or more 20 MHz sub-bands will assume an IEEE 802.11a data unit of rate 6 Mbps (assuming the SIG fields set rate to 6 Mbps), and will determine worse channel estimation quality at tones around "DC" and "Guard band" in each sub-band, due to the non-zero values in "DC/Guard tones" at VHT-LTF**1**. In particular, the non-zero "DC" may be more problematic.

[0123] In some embodiments, to improve the detection of SIG fields, zero values are kept at the "DC" tones and/or "Guard" tones in each of the sub-bands of the LTS symbols in each of the VHT-LTF fields, and also not to transmit data in these tones in the Data field (VHT portion). In these embodiments, SIG field decoding quality will tend to be improved, at the expense of a lower data rate. On the other hand, a benefit of a short mixed mode preamble compared with the other embodiments is obtained.

[0124] In some embodiments, various preamble structures such as described above, are modified by including one or more VHT-SIG symbols after any VHT-LTF (e.g., VHT-LTF**1**, or VHT-LTF**2**, . . . VHT-LTFN). In some embodiments, signaling of VHT-LTF length by other VHT-SIG field(s) that are placed after L-SIG in mixed mode, or after VHT-LTF**1** in Greenfield, is utilized. In other embodiments, VHT-SIG symbols occur after VHT-LTF**1**. If a VHT-SIG occurs after VHT-LTFn, then it can be spatially mapped the same way as VHT-LTFn (e.g., by vector QP_n) or the same way as VHT-LTF**1** (e.g. by vector QP_1) so the receiver can use the channel estimation from VHT-LTFn or VHT-LTF**1** to decode this VHT-SIG block after VHT-LTFn. These techniques can be utilized in either in mixed mode or Greenfield formats. In some embodiments, a benefit is that SDMA downlink transmissions can differentiate VHT-SIG fields for different users by beam-steering, while keeping the legacy portion of mixed mode packet unsteered (e.g., "omni-directional"). In some embodiments, different VHT-SIG symbols are located in unsteered and steered portions of the preamble, such as described below.

[0125] FIG. **18** is a diagram of an example data unit **400** for use in embodiments in which the first communication protocol supports downlink SDMA (DL-SDMA). A first portion of the data unit **400** includes L-STF, L-LTF, L-SIG, VHT-SIG**1**, and VHT-SIG**2** fields. The first portion is transmitted omni-directional and includes the same information for all client devices, in an embodiment. A second portion of the data unit **400** includes a VHT-STF field **401**, a VHT-LTF**1** field **402**, a VHT-SIG**3** field **404**, a VHT-SIG**4** field **408**, VHT-LTF**2** through VHT-LTFN fields **412**, and a VHT data portion **416**. At least some of the second portion includes different data for different client devices, wherein the different data is beam-steered to the different client devices.

[0126] In an embodiment, the VHT-SIG**1** and VHT-SIG**2** may be used to jointly signal the number of VHT-LTFs or the number of VHT-LTFs before the next block of VHT-SIG for all the SDMA users. In one embodiment, content of VHT-SIG**1** and VHT-SIG**2** are repetitions of L-SIG, or any other suitable signal. In another embodiment, the VHT-SIG**1** and VHT-SIG**2** are any suitable symbol that delivers any common information to all the users (e.g. common MAC information delivered from AP to all the users). In some embodiments described herein, a first block of VHT-SIG fields (e.g. VHT-SIG**1** and VHT-SIG**2** in FIG. **16**) is referred to as VHT-SIGA, and a second block VHT-SIG fields (e.g. VHT-SIG**3** and VHT-SIG**4** in FIG. **16**) is referred to as VHT-SIGB.

[0127] In an embodiment, the "reserved" bit in L-SIG is set to 1. VHT-SIG**1** and VHT-SIG**2** can be modulated such as described above. If VHT-SIG**1** and VHT-SIG**2** are modulated using BPSK or Q-BPSK, with r=½ binary convolutional code (BCC), this is the same as L-SIG or HT-SIG of the IEEE 802.11n Standard. In this embodiment, the VHT-SIG**1** and

VHT-SIG**2** and/or the reserved bit in L-SIG permit spoofing and/or first communication protocol data unit detection such as described above.

[0128] In an embodiment and in some scenarios, content of VHT-SIG**3** and VHT-SIG**4** is different for different users, and is multiplexed by the steering matrix Q for different users.

[0129] FIG. **19** is a diagram of another example data unit **450** for use in embodiments in which the first communication protocol supports downlink SDMA (DL-SDMA). A first portion of the data unit **450** includes L-STF, L-LTF, L-SIG, and VHT-SIG**1** fields. The first portion is transmitted omni-directional and includes the same information for all client devices, in an embodiment. A second portion of the data unit **400** includes VHT-STF, VHT-LTF**1**, a VHT-SIG**2** field **454**, a VHT-SIG**3** field **458**, the VHT-LTF**2** through VHT-LTFN fields **412**, and the VHT data portion **416**. The second portion includes different data for different client devices, wherein the different data is beamsteered to the different client devices.

[0130] The data unit **450** is similar to the data unit **400**, but one symbol shorter before the VHT-STF. In an embodiment, the "reserved" bit in L-SIG is set to 1, permitting first communication protocol data unit detection. VHT-SIG**1** can be modulated such as described above. If VHT-SIG**1** is modulated using BPSK, this permits spoofing and first communication protocol data unit detection. In an embodiment, content of VHT-SIG**1** is a repetition of L-SIG, or any other suitable value.

[0131] FIG. **20** is a diagram of another example data unit **470** for use in embodiments in which the first communication protocol supports downlink SDMA (DL-SDMA). A first portion of the data unit **470** includes L-STF, L-LTF, L-SIG, HT-SIG**1**, and HT-SIG**2** fields. The first portion is transmitted omni-directional and includes the same information for all client devices, in an embodiment. A second portion of the data unit **400** includes VHT-STF, VHT-LTF**1**, a VHT-SIG**1** field **474**, a VHT-SIG**2** field **478**, the VHT-LTF**2** through VHT-LTFN fields **412**, and the VHT data portion **416**. The second portion includes different data for different client devices, wherein the different data is beamsteered to the different client devices.

[0132] The data unit **470** is similar to the data unit **400**, but includes HT-SIG fields in the first portion. In this embodiment, the length field in HT-SIG is used to indicate the length of the data unit **470** for IEEE 802.11n spoofing.

[0133] In embodiments similar to those described above, the VHT-SIG blocks contain 3 OFDM symbols, conforming to all the previous cases where 3 OFDM symbols are needed for each VHT-SIG field. Also, in embodiments similar to those described above, the VHT-SIG placed after one VHT-LTF is applied regardless of DL-SDMA.

[0134] In the above mentioned examples in which two VHT-SIG blocks are present (e.g., one after L-SIG and the other after one of the VHT-LTFs), in some embodiments the two VHT-SIG blocks have different numbers of OFDM symbols. For example, the first VHT-SIG block has 3 symbols and second VHT-SIG block has 2 or 1 symbols. In another example, the first VHT-SIG block has 2 symbols and the second VHT-SIG block has 1 symbol.

[0135] In some embodiments that support DL-SDMA, the same preamble utilized regardless of DL-SDMA or not. In one embodiment of a non DL-SDMA case, the first VHT-SIG block signals the PHY information. In this embodiment, in the DL-SDMA case, the first VHT-SIG block delivers common PHY information for all the DL-SDMA users (e.g., bandwidth, short GI, etc.), and the second VHT-SIG block includes user-specific PHY information (e.g., MCS, length, etc.). In some embodiments, other fields are omitted in the second VHT-SIG block (e.g., sounding, extension, VHT-LTFs, etc.), so the second VHT-SIG block can be shorter than the first VHT-SIG block.

[0136] In one embodiment, the first VHT-SIG block has 2 OFDM symbols, and the second VHT-SIG block has 1 OFDM symbol, and the same preamble is applied for both single user and SDMA. In this embodiment, the first VHT-SIG always signals common PHY information for all users regardless of single user or SDMA, and the second VHT-SIG block has user specific information in the case of SDMA. For example, the first VHT-SIG block includes Length, GI Length, Bandwidth, Coding Type, Non-Sounding, number of VHT-LTFs (or 1 bit for whether only single VHT-LTF is present for single user case), BCC Tail, CRC, according to an embodiment. On the other hand, the second VHT-SIG block includes MCS, STBC type, smoothing, BCC Tail, CRC, according to an embodiment. In other embodiment, some of the above listed subfields are not present.

[0137] The IEEE 802.11n Standard specifies that, in mixed mode, the "Rate" subfield in L-SIG must be set to the lowest rate, i.e., 6 Mbps. The first communication protocol, on the other hand, sets the "Rate" subfield in L-SIG to rate specified in the IEEE 802.11a Standard other than 6 Mbps, according to an embodiment. In this embodiment, an IEEE 802.11n Standard compliant station, when decoding the L-SIG and finding Rate is not 6 Mbps, will automatically treat the packet as a legacy IEEE 802.11a packet, and set CCA according to the "Rate" and "Length" subfields in L-SIG. In an embodiment, one or more VHT-SIG symbols are modified for detection according to the first communication protocol, such as described above (e.g., the various modulation techniques described above).

[0138] In embodiments similar to all of the above-described examples, the number of tones delivering VHT-SIG in each of the VHT-SIG OFDM symbols is more than the number used in L-SIG. For example, 52 data tones are used in each of the VHT-SIG OFDM symbols, whereas 48 data tones are used in L-SIG and HT-SIG (if utilized), in some embodiments. In an embodiment, the same tone mapping as in the IEEE 802.11n Standard for 20 MHz and MCSO is utilized. In this embodiment, four more bits can be delivered for VHT-SIG in each of the VHT-SIG OFDM symbols. In an embodiment, the long training field right before the VHT-SIG also sends non-zero training values (+−1) at these four additional tones.

[0139] FIG. **21**A is a diagram of another example data unit **500**, according to an embodiment, that can be used in both DL-SDMA and non DL-SDMA scenarios. A first portion of the data unit **470** includes L-STF, L-LTF, L-SIG fields, and VHT-SIGA fields **504**. A second portion includes VHT-STF, VHT-LTF**1**, the zero or more VHT-LTF**2** through VHT-LTFN fields **412**, a VHT-SIGB field **508**, and the VHT data portion **416**. In the non DL-SDMA case, the VHT data portion **416** includes data for a single device. In the DL-SDMA case, VHT-STF, VHT-LTF**1**, the VHT-LTF**2** through VHT-LTFN fields **412**, the VHT-SIGB field **508**, and the VHT data portion **416** include different information for different client devices. In non-DL-SDMA cases, the first portion of the data unit **500** need not be steered differently than the second portion of the data unit **500** (e.g., need not be unsteered vs. steered).

[0140] In an embodiment, the rate field in the L-SIG field is set to 6 Mbps, and the length field is set to indicate the duration T. In an embodiment, each VHT-SIGA field **504** includes two OFDM symbols: a first symbol and a second symbol. The VHT-SIGB field **508** has one OFDM symbol. FIG. **21**B illustrates modulation applied to the L-SIG fields **112**, the first symbols of the VHT-SIGA fields **504**, and the second symbols of the VHT-SIGA fields **504**.

[0141] The data unit **500** is an example data unit for an 80 MHz bandwidth transmission. The data unit **500** can be suitably modified for transmissions of different bandwidths as 20 MHz, 40 MHz, 160 MHz, etc.

[0142] In an embodiment, subfields of VHT-SIGA and VHT-SIGB are allocated regardless of whether single user or multiple user (e.g., SDMA) transmission is being utilized. In this embodiment, VHT-SIG-A includes two OFDM symbols VHT-SIG-B includes one OFDM symbol. In one example, 48 tones are utilized in both VHT-SIG-A and VHT-SIG-B. In another example, 52 tones are utilized in one or both of VHT-SIG-A and VHT-SIG-B.

[0143] In one specific embodiment, VHT-SIGA includes the following subfields: Length/Duration (16 bits) (can be defined in "number of OFDM symbols", for example); Bandwidth (2 bits); Coding Type (1 bit); Not Sounding (1 bit); Number of Extension VHT-LTFs (3 bits); Short GI (1 bit) (in one implementation, Short GI is not set to 1 in DL-SDMA if at least one user is utilizing a single stream, and at least one user is utilizing more than one stream); Single VHT-LTF? (1 bit) (in one implementation, early signaling of short GI with a single stream (MCS is in VHT-SIG-B), and is not set to 1 in downlink multi-user MIMO data units unless all users are with single stream); CRC (8 bits); BCC tail bits (6 bits). In one implementation, the VHT-SIGA includes a "reserved" subfield.

[0144] In one specific embodiment, VHT-SIGB includes the following subfields: the MCS (8 bits); Aggregation (1 bit); STBC (2 bits); Smoothing (1 bit); CRC (4 bits); BCC tail bits (6 bits). In one embodiment, the smoothing subfield is omitted. In one implementation, the VHT-SIGB includes a "reserved" subfield.

[0145] In one embodiment, the first symbol of VHT-SIGA is modulated using BPSK, whereas the second symbol of VHT-SIGA is modulated using Q-BPSK, as illustrated in FIG. **21**B. In one embodiment, a faster clock as compared to the IEEE 802.11n Standard is utilized for transmitting the preamble. In an embodiment, VHT-STF is longer as compared to HT-STF of the IEEE 802.11n Standard, and/or longer the GI of VHT-LTF**1** is longer as compared to the GI of HT-LTF**1** of the IEEE 802.11n Standard. This provides for better AGC performance especially at a transmit beamformee, in some implementations. In one embodiment, a different modulation of the first OFDM symbol of VHT-SIGA is utilized as compared to the IEEE 802.11n Standard, so the IEEE 802.11n Standard HT detection will still fail, but a client station configured according to the first communication protocol can determine that the data unit conforms to the first communication protocol. For VHT-SIGA and/or VHT-SIGB, 48 or 52 tones are utilized, depending on the implementation, according to some embodiments.

[0146] In an embodiment, Q-BPSK is utilized on M_Q data tones in the first symbol of VHT-SIG-A or both of the symbols of VHT-SIG-A, and BPSK is utilized on the remaining $M_I=48-M_Q$ data tones. As just two examples, the (M_Q, M_I) tuple equals (24, 24) or (16, 32). In an embodiment, the different modulations are spread across the whole band to explore frequency diversity, e.g. by equal or substantially equal separations. The specific tone indices with the different modulations can be specified by the first communication protocol.

[0147] In this embodiment, a client station configured according to the first communication protocol can differentiate between first communication protocol data units, IEEE 802.11n Standard data units, and IEEE 802.11a Standard data units by comparing energy of Q-arm and I-arm across the 48 tones. This is equivalent to delivering 2 information bits by the 48 tones. A client station configured according to the IEEE 802.11n Standard, when receiving such a first communication protocol data unit, will fail detection of a HT IEEE 802.11n Standard data unit, and will thus treat the data unit as a IEEE 802.11a Standard data unit (i.e., L-SIG spoofing).

[0148] In another embodiment, the legacy portion of a preamble utilizes the 4 extra guard tones of the 20 MHz signal, which were allocated to the IEEE 802.11n Standard 20 MHz data signal, but not to the IEEE 802.11a 20 MHz signal. These 4 tones are not used to deliver data of VHT-SIG/L-SIG fields, but they are predefined to be non-zero symbols, e.g. in BPSK (+−1), or in Q-BPSK (+−j), in an embodiment. Whenever a first communication protocol receiver detects that there are signals on these 4 tones, and/or the detected symbols (after demodulation and slicing) matches the predefined symbols on these 4 tones, then the receiver determines that the data unit conforms to the first communication protocol.

[0149] In one embodiment, the data tones in the first OFDM symbol of VHT-SIG-A are modulated using BPSK, so IEEE 802.11a/11n receivers will treat the data unit as an 802.11a Standard data unit. In various embodiments, the 4 extra tones are applied in L-SIG only, or both L-SIG and VHT-SIG-A, or first OFDM symbol of VHT-SIG-A only, or L-SIG and first OFDM symbol of VHT-SIG-A, not in the remaining symbols of VHT-SIG, etc.

[0150] In these embodiments, the L-LTF also includes these 4 tones, which could be in the same way HT-GF-STF and GF-HT-LTF**1** in green field mode of the IEEE 802.11n Standard 20 MHz signal. A receiver may detect the energy of these 4 tones across all the mentioned OFDM symbols (e.g. L-LTF, L-SIG, and 1st symbol of VHT-SIG-A), for detection of first communication protocol data units.

[0151] In embodiments in which VHT-SIG-B is placed after VHT-LTFn (e.g., after the last VHT-LTF, as in FIG. **21**A), VHT-SIG-B is spatially mapped the same way as VHT-LTFn (e.g. by vector QP_n) so a receiver can use the channel estimation from VHT-LTFn to decode VHT-SIG-B. In another embodiment, VHT-SIG-B is spatially mapped the same way as VHT-LTF**1** (e.g. by vector QP_1), so a receiver can use the channel estimation from VHT-LTF**1** to decode VHT-SIG-B.

[0152] In some embodiments VHT-SIG-B is placed after VHT-LTFn (e.g., the first or the last VHT-LTF), no matter single user or multi-user packets. In other embodiments, VHT-SIG-B is placed after VHT-LTF**1** for single user and after VHT-LTFn for multi-user cases (e.g. after the first VHT-LTF for single user, and after the last VHT-LTF for multi-user). In other embodiments, VHT-SIGB does not exist for single user, and is applied for multi-user. In other embodiments, VHT-SIGB does not exist regardless of single user or multi-user. In some embodiments, VHT-SIG-A includes a bit to indicate single user or multi-user, and a subfield to indicate a total number of VHT-LTFs (which may be utilized by a

receiver to locate the position of VHT-SIG-B in embodiments and/or data units that include VHT-SIG-B).

[0153] In one specific embodiment, VHT-SIGA includes the following subfields: Length/Duration (16 bits or some other suitable number) (can be defined in "number of OFDM symbols", for example); Bandwidth (2 or more bits); Coding Type (1 bit); Not Sounding (1 bit); Smoothing (1 bit); Short GI (1 bit); CRC (8 bits); BCC tail bits (6 bits); a Number of Extension VHT-LTFs; Ness. In one implementation, the VHT-SIGA includes a "reserved" subfield.

[0154] In one specific embodiment, VHT-SIGB includes the following subfields: the MCS (any suitable number of bits); Aggregation (1 bit); STBC (any suitable number of bits); CRC (any suitable number of bits, but can be less than 8 bits in one implementation); BCC tail bits (6 bits). In one embodiment, the smoothing subfield is omitted from VHT-SIGA and included in VHT-SIGB. In one embodiment, the aggregation subfield is omitted from VHT-SIGB and included in VHT-SIGA. In one implementation, the VHT-SIGB includes a "reserved" subfield.

[0155] If VHT-SIG-B is always placed after the last VHT-LTF regardless single user or multi-user transmission, a number of spatial stream (Nss) and STBC can be signaled in VHT-SIG-A, according to an embodiment. In this embodiment, in DL-SDMA case, Nss and STBC are constrained to be common for all the clients.

[0156] FIG. **22** is a diagram of another example data unit **550**, according to an embodiment, that can be used in both DL-SDMA and non DL-SDMA scenarios. The data unit **550** is similar to the data unit **500** of FIG. **21**A, but omits the VHT-SIGB field **508**. The L-SIG fields **112** and the VHT-SIGA fields **504** are modulated according to FIG. **21**B, in an embodiment. The data unit **550** is an example data unit for an 80 MHz bandwidth transmission. The data unit **550** can be suitably modified for transmissions of different bandwidths as 20 MHz, 40 MHz, 160 MHz, etc.

[0157] In some embodiments, the first communication protocol utilizes beamforming and/or downlink multi-user multiple input, multiple output (DL-MU-MIMO). In these embodiments, the communication devices in a network utilize sounding data units (also referred to as sounding packets) for beamforming and/or DL-MU-MIMO.

[0158] In some embodiments, a sounding data unit includes a preamble but omits a data portion. In one embodiment of a sounding data unit, sounding signals are included in the VHT-SIGB field. In other embodiments, the sounding data unit does not include the VHT-SIGB field.

[0159] In one embodiment, preambles of regular data units with data include VHT-SIGB. In a particular embodiment, preambles of regular data units with data include VHT-SIGB, whereas sounding data units do not include VHT-SIGB.

[0160] In one embodiment, the L-SIG field and/or the VHT-SIGA field and/or the VHT-SIGB field (if included) of a sounding data unit indicates that the data unit does not have a data portion. In another embodiment, the L-SIG field and/or the VHT-SIGA field and/or the VHT-SIGB field (if included) of a sounding data unit additionally or alternatively includes a "non-sounding" bit similar to the "non-sounding" bit in the HT-SIG field of the IEEE 802.11n Standard that indicates whether the data unit is a sounding data unit.

[0161] In embodiments in which preambles of regular data units include VHT-SIGB whereas the preambles of sounding data units do not include VHT-SIGB, a receiver determines whether VHT-SIGB is included in the preamble of a received data unit based on the data length and/or "non-sounding" information from the L-SIG and/or VHT-SIGA fields.

[0162] FIG. **23** is a diagram of an example sounding data unit **600**, according to an embodiment. The sounding data unit **600** omits a data portion. The sounding data unit **600** includes an L-LTF field **604**, an L-SIG field **608**, a VHT-SIGA field having a first symbol **612** and a second symbol **616**. The sounding data unit **600** also includes a VHT-STF field **620**, one or more VHT-LTF fields **624**, and a VHT-SIGB field **628**. In one embodiment, the L-SIG field **604** and/or the VHT-SIGA field **612**, **616** and/or the VHT-SIGB field **628** indicates that the data unit does not have a data portion. In another embodiment, the L-SIG field **604** and/or the VHT-SIGA field **612**, **616** and/or the VHT-SIGB field **628** additionally or alternatively include "non-sounding" information (i.e., a "non-sounding" bit) that indicates that the data unit **600** is a sounding data unit.

[0163] FIG. **24** is a diagram of another example sounding data unit **650**, according to an embodiment. The sounding data unit **650** is similar to the sounding data unit **600**, but omits VHT-SIGB **628**.

[0164] At least some of the various blocks, operations, and techniques described above may be implemented utilizing hardware, a processor executing firmware instructions, a processor executing software instructions, or any combination thereof. When implemented utilizing a processor executing software or firmware instructions, the software or firmware instructions may be stored in any computer readable memory such as on a magnetic disk, an optical disk, or other storage medium, in a RAM or ROM or flash memory, processor, hard disk drive, optical disk drive, tape drive, etc. Likewise, the software or firmware instructions may be delivered to a user or a system via any known or desired delivery method including, for example, on a computer readable disk or other transportable computer storage mechanism or via communication media. Communication media typically embodies computer readable instructions, data structures, program modules or other data in a modulated data signal such as a carrier wave or other transport mechanism. The term "modulated data signal" means a signal that has one or more of its characteristics set or changed in such a manner as to encode information in the signal. By way of example, and not limitation, communication media includes wired media such as a wired network or direct-wired connection, and wireless media such as acoustic, radio frequency, infrared and other wireless media. Thus, the software or firmware instructions may be delivered to a user or a system via a communication channel such as a telephone line, a DSL line, a cable television line, a fiber optics line, a wireless communication channel, the Internet, etc. (which are viewed as being the same as or interchangeable with providing such software via a transportable storage medium). The software or firmware instructions may include machine readable instructions that, when executed by the processor, cause the processor to perform various acts.

[0165] When implemented in hardware, the hardware may comprise one or more of discrete components, an integrated circuit, an application-specific integrated circuit (ASIC), etc.

[0166] While the present invention has been described with reference to specific examples, which are intended to be illustrative only and not to be limiting of the invention, changes, additions and/or deletions may be made to the disclosed embodiments without departing from the scope of the invention.

What is claimed is:

1. A method for generating a data unit for transmission via a communication channel, the data unit conforming to a first communication protocol, the method comprising:

generating a preamble of the data unit, wherein

the preamble includes a first field having information that indicates a duration of the data unit, the first field being formatted such that the first field is decodable by a receiver device that conforms to a second communication protocol but does not conform to the first communication protocol to determine the duration of the data unit based on the first field,

the preamble is formatted such that a portion of the preamble is decodable by a receiver device that conforms to a third communication protocol but does not conform to the first communication protocol, and

the preamble is formatted such that a receiver device that conforms to the first communication protocol can determine that the data unit conforms to the first communication protocol; and

generating a data portion of the data unit that conforms to the first communication protocol and does not conform to either (i) the second communication protocol or (ii) the third communication protocol.

2. A method according to claim **1**, wherein the portion of the preamble that is decodable by the receiver device that conforms to the third communication protocol but does not conform to the first communication protocol includes the first field, and wherein the first field is formatted such that the first field is decodable by the receiver device that conforms to the third communication protocol but does not conform to the first communication protocol to determine the duration of the data unit based on the first field.

3. A method according to claim **2**, wherein the first field of the preamble includes a rate subfield and a length subfield that indicate the duration of the data unit.

4. A method according to claim **1**, wherein the first field of the preamble includes a subfield that is set to a value that contradicts the second communication protocol.

5. A method according to claim **4**, wherein the value of the first subfield that contradicts the second communication protocol indicates to the receiver device that conforms to the first communication protocol that the data unit conforms to the first communication protocol.

6. A method according to claim **1**, wherein a second field of the preamble includes a subfield that is set to a value that contradicts the third communication protocol.

7. A method according to claim **6**, wherein the subfield that is set to the value that contradicts the third communication protocol indicates to the receiver device that conforms to the third communication protocol to the wait until the energy of the data unit drops out before switching to a clear channel assessment (CCA) mode.

8. A method according to claim **1**, wherein a second field of the preamble includes information that indicates the duration of the data unit, and wherein the portion of the preamble that is decodable by the receiver device that conforms to the third communication protocol but does not conform to the first communication protocol includes the second field.

9. A method according to claim **1**, wherein a second field of the preamble is modulated using a modulation different than specified by the third communication protocol.

10. A method according to claim **9**, wherein the modulation of the second field different than specified by the third communication protocol indicates to the receiver device that conforms to the first communication protocol that the data unit conforms to the first communication protocol.

11. A method according to claim **10**, wherein the modulation of the second field includes binary phase shift keying (BPSK) modulation of a first orthogonal frequency division multiplexing (OFDM) symbol, and wherein modulation specified by the third communication protocol for a symbol corresponding to the first OFDM symbol is BPSK modulation rotated by 90 degrees (Q-BPSK).

12. A method according to claim **10**, wherein the modulation of the second field includes modulation of a second OFDM symbol different than the modulation of the first OFDM symbol.

13. A method according to claim **1**, wherein the data portion includes data for only a single receiver device.

14. A method according to claim **1**, wherein the data portion includes independent data for a plurality of receiver devices.

15. A method according to claim **1**, wherein the data portion has a cumulative bandwidth greater than a bandwidth specified by the second communication protocol and a maximum bandwidth specified by the third communication protocol.

16. A method according to claim **1**, wherein the second communication protocol is the Institute for Electrical and Electronics Engineers (IEEE) 802.11a Standard.

17. A method according to claim **16**, wherein the third communication protocol is the IEEE 802.11n Standard.

18. An apparatus, comprising:

a wireless local area network (WLAN) physical layer (PHY) unit configured to:

generate a preamble of the data unit that conforms to a first communication protocol, wherein

the preamble includes a first field having information that indicates a duration of the data unit, the first field being formatted such that the first field is decodable by a receiver device that conforms to a second communication protocol but does not conform to the first communication protocol to determine the duration of the data unit based on the first field;

the preamble is formatted such that a portion of the preamble is decodable by a receiver device that conforms to a third communication protocol but does not conform to the first communication protocol;

the preamble is formatted such that a receiver device that conforms to the first communication protocol can determine that the data unit conforms to the first communication protocol; and

wherein the WLAN PHY unit is further configured to generate a data portion of the data unit that conforms to the first communication protocol and does not conform to either (i) the second communication protocol or (ii) the third communication protocol.

19. An apparatus according to claim **18**, wherein the portion of the preamble that is decodable by the receiver device that conforms to the third communication protocol but does not conform to the first communication protocol includes the first field, and wherein the first field is formatted such that the first field is decodable by the receiver device that conforms to the third communication protocol but does not conform to the first communication protocol to determine the duration of the data unit based on the first field.

20. An apparatus according to claim **18**, wherein the first field of the preamble includes a rate subfield and a length subfield that indicate the duration of the data unit.

21. An apparatus according to claim **18**, wherein the first field of the preamble includes a subfield that is set to a value that contradicts the second communication protocol.

22. An apparatus according to claim **21**, wherein the value of the first subfield that contradicts the second communication protocol indicates to the receiver device that conforms to the first communication protocol that the data unit conforms to the first communication protocol.

23. An apparatus according to claim **18**, wherein a second field of the preamble includes a subfield that is set to a value that contradicts the third communication protocol.

24. An apparatus according to claim **23**, wherein the subfield that is set to the value that contradicts the third communication protocol indicates to the receiver device that conforms to the third communication protocol to the wait until the energy of the data unit drops out before switching to a clear channel assessment (CCA) mode.

25. An apparatus according to claim **18**, wherein a second field of the preamble includes information that indicates the duration of the data unit, and wherein the portion of the preamble that is decodable by the receiver device that conforms to the third communication protocol but does not conform to the first communication protocol includes the second field.

26. An apparatus according to claim **18**, wherein a second field of the preamble is modulated using a modulation different than specified by the third communication protocol.

27. An apparatus according to claim **26**, wherein the modulation of the second field different than specified by the third communication protocol indicates to the receiver device that conforms to the first communication protocol that the data unit conforms to the first communication protocol.

28. An apparatus according to claim **18**, wherein the data portion has a cumulative bandwidth greater than a bandwidth specified by the second communication protocol and a maximum bandwidth specified by the third communication protocol.

29. A method for generating a data unit for transmission via a communication channel, the data unit conforming to a first communication protocol, the method comprising:

generating a preamble of the data unit, wherein

the preamble is formatted such that a portion of the preamble is decodable by a receiver device that conforms to a second communication protocol but does not conform to the first communication protocol to determine that the data unit conforms to a third communication protocol,

the preamble is formatted such that a receiver device that conforms to the first communication protocol can determine that the data unit conforms to the first communication protocol; and

generating a data portion of the data unit that conforms to the first communication protocol and does not conform to either (i) the second communication protocol or (ii) the third communication protocol.

30. A method according to claim **29**, wherein a first field of the preamble substantially conforms to the third communication protocol, and wherein the first field includes a rate subfield and a length subfield that indicate the duration of the data unit.

31. A method according to claim **29**, wherein a first field of the preamble substantially conforms to the third communication protocol, and wherein the first field of the preamble includes a subfield that is set to a value that contradicts the third communication protocol.

32. A method according to claim **31**, wherein the value of the first subfield that contradicts the third communication protocol indicates to the receiver device that conforms to the first communication protocol that the data unit conforms to the first communication protocol.

33. A method according to claim **29**, wherein a first field of the preamble is modulated using a modulation different than specified by the second communication protocol.

34. A method according to claim **33**, wherein the modulation of the second field different than specified by the second communication protocol indicates to the receiver device that conforms to the first communication protocol that the data unit conforms to the first communication protocol.

35. An apparatus, comprising:

a wireless local area network (WLAN) physical layer (PHY) unit configured to:

generate a preamble of the data unit that conforms to a first communication protocol, wherein

the preamble is formatted such that at least a portion of the preamble is decodable by a receiver device that conforms to a second communication protocol but does not conform to the first communication protocol to determine that the data unit conforms to a third communication protocol;

the preamble is formatted such that a receiver device that conforms to the first communication protocol can determine that the data unit conforms to the first communication protocol; and

wherein the WLAN PHY unit is further configured to generate a data portion of the data unit that conforms to the first communication protocol and does not conform to either (i) the second communication protocol or (ii) the third communication protocol.

* * * * *