Trials@uspto.gov
Tel: 571-272-7822

Paper 21
Entered: September 25, 2018

UNITED STATES PATENT AND TRADEMARK OFFICE

BEFORE THE PATENT TRIAL AND APPEAL BOARD

UNIFIED PATENTS INC.,
Petitioner,

v.

GENERAL ACCESS SOLUTIONS, LTD.,
Patent Owner.

Case IPR2017-01178
Patent 9,225,555 B2

Before KEN B. BARRETT, JEFFREY A. STEPHENS, and CHRISTA P. ZADO, *Administrative Patent Judges*.

Opinion for the Board filed by ZADO, *Administrative Patent Judge*.

Opinion Dissenting filed by STEPHENS, *Administrative Patent Judge*.

ZADO, *Administrative Patent Judge*.

FINAL WRITTEN DECISION
35 U.S.C. § 318(a) and 37 C.F.R. § 42.73

I. INTRODUCTION

A. Background and Summary

Unified Patents, Inc. ("Petitioner") filed a request for *inter partes* review of claims 1–20 (the "challenged claims") of U.S. Patent No. 9,225,555 B2 ("the '555 patent," Ex. 1001). Paper 2 ("Pet."). General Access Solutions, Ltd. ("Patent Owner") filed a Preliminary Response. Paper 6 ("Prelim. Resp."). We instituted an *inter partes* review of all challenged claims on all asserted grounds, specifically patentability under 35 U.S.C. § 103(a) of (1) claims 1–20 as obvious over Hohnstein[1] and Phillips,[2] and (2) claims 1–20 as obvious over Hohnstein and Agrawal.[3] Paper 7 ("Inst. Dec.").

Subsequent to institution, Patent Owner filed a Response. Paper 12 ("PO Resp."). Petitioner filed a Reply. Paper 13 ("Reply"). Oral hearing was held on June 14, 2018. Paper 20 ("Tr.").

We have jurisdiction under 35 U.S.C. § 6(b). This Final Written Decision is issued pursuant to 35 U.S.C. § 318(a). Having reviewed the arguments of the parties and the supporting evidence, we find that Petitioner has demonstrated by a preponderance of the evidence that each of the challenged claims is unpatentable. 35 U.S.C. § 316(e); 37 C.F.R. § 42.1(d).

---

[1] U.S. Patent No. 6,816,706 B1 (issued Nov. 9, 2004). (Ex. 1002).

[2] John A. Phillips & Gerard Mac Namee, *Personal Wireless Communication With DECT and PWT* (1998). (Ex. 1003).

[3] U.S. Patent No. 5,722,051 (issued Feb. 24, 1998). (Ex. 1005).

B. Related Matters

The parties assert the ’555 patent is involved in the following proceedings: *General Access Solutions, Ltd. v. Pantech Co., Ltd. et al.*, Civil Action No. 2:16-cv-01348-RWS (E.D. Tex.); *General Access Solutions, Ltd. v. LG Electronics, Inc. et al.*, Civil Action No. 2:16-cv-01349-RWS (E.D. Tex.); *General Access Solutions, Ltd. v. Novatel Wireless, Inc.*, Civil Action No. 2:16-cv-01350-RWS (E.D. Tex.); *General Access Solutions, Ltd. v. Xiaomi, Inc.*, Civil Action No. 2:16-cv-01351-RWS (E.D. Tex.). Pet. 1–2; Paper 5, 2.

C. The ’555 Patent

The ’555 patent was filed on August 6, 2012. Ex. 1001, [21]. The ’555 patent claims priority, through a series of continuations, to an application filed on April 20, 2001 (hereinafter, “critical date”), the earliest possible filing date to which the ’555 patent can claim priority. *Id.* at [63]. The parties do not dispute this is the priority date for the ’555 patent.

The ’555 patent describes wireless communication systems that include a wireless communication device in communication both with a base station and mobile stations. Ex. 1001, 5:29–32. Figure 2 is reproduced below.

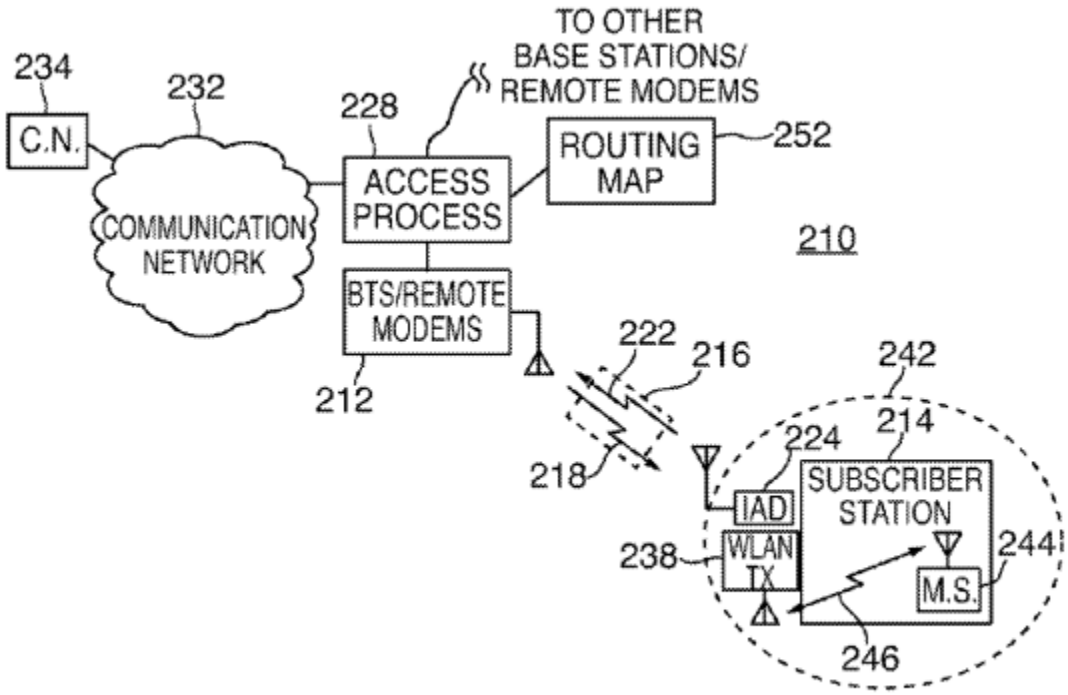

FIG. 2

Figure 2 "illustrates a functional block diagram of a fixed wireless access (FWA) communication system." Ex. 1001, 6:25–26. Communication system 210 provides for radio communications between a fixed-site base station, of which base station 212 is exemplary, and fixed site subscriber stations, of which subscriber station 214 is exemplary. *Id.* at 7:33–37. Located at subscriber station 214 is integrated access device ("IAD") 224 which forms a transceiver that transmits signals to and receives signals from base station 212. *Id.* at 7:42–49. Base station 212 is coupled to access process 228, which is coupled to communication network 232—a network such as a public switched telephone network or packet data network. *Id.* at 7:56–62. Coupled to communication network 232 is correspondent node 234. *Id.* at 7:62–63. Accordingly, a communication path may be formed between IAD 224 and correspondent node 234. *Id.* at 63–67.

Also located at subscriber station 214 is wireless local area network ("WLAN") transceiver 238 connected to the circuitry of IAD 224. *Id.* at 8:5–8. "The WLAN transceiver defines a coverage area 242 defining a cell." *Id.* at 8:8–9. Mobile station 244 positioned within cell 242 is capable of communicating with WLAN transceiver 238. *Id.* at 8:9–11. "Because of the connection of the WLAN transceiver to the transceiver of [IAD 224], signals originated at the mobile station . . . can . . . be provided to the transceiver of [IAD 224] . . . and, thereafter, be communicated to another device, such as the correspondent node 234." *Id.* at 8:19–26. "Analogously, signals originated at . . . correspondent node [234], or elsewhere, can be communicated to the mobile station." *Id.* at 8:26–28.

Figure 5 is reproduced below.

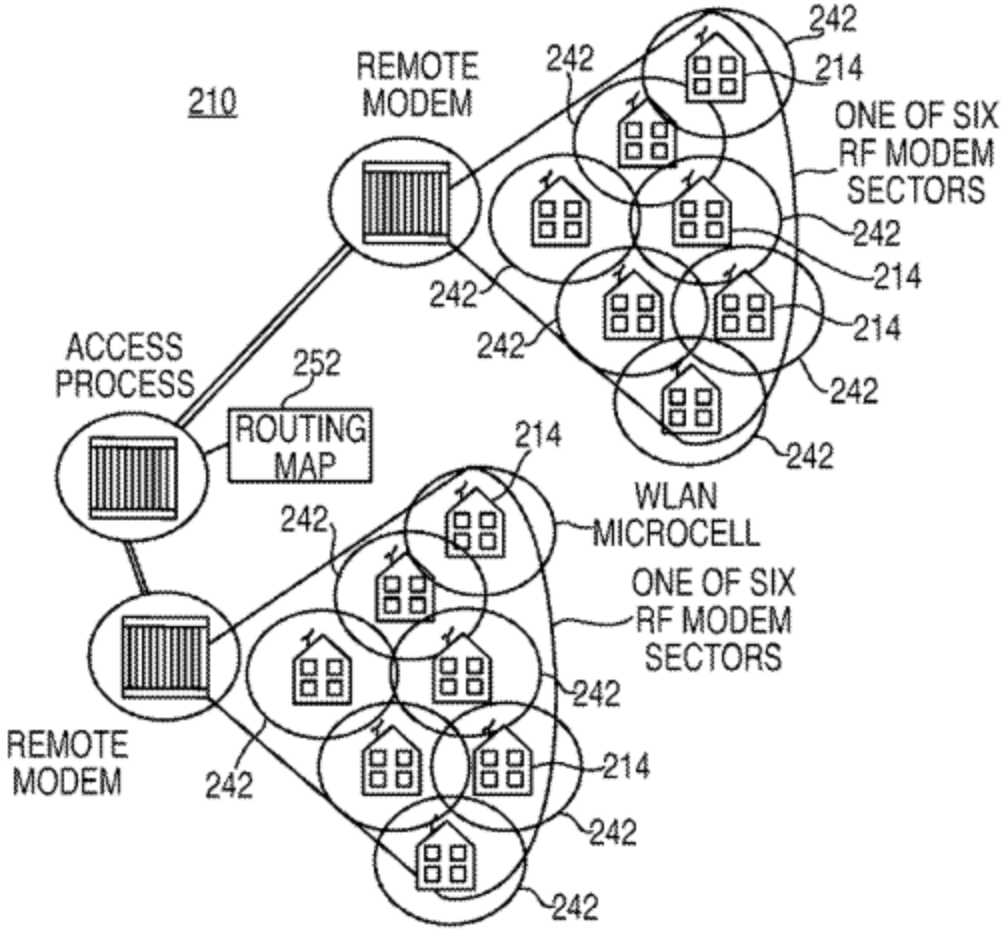

FIG. 5

Figure 5 illustrates "a fixed wireless access communication system similar to that shown in Figure 2" but "also illustrating a plurality of cellular coverage areas defined by about a plurality of subscriber stations." *Id.* at 6:34–38. Figure 5 shows "a plurality of subscriber stations 214 [that] include WLAN transceivers 238 (shown in Fig. 2) connected to corresponding [IADs 224]." *Id.* at 11:6–10. Each WLAN transceiver defines a coverage area 242. *Id.* at 10–12. A mobile station initially positioned within a first coverage area 242

defined by a first WLAN transceiver at a first subscriber station "is permitted movement, such as out of the coverage area defined by the [first WLAN] transceiver positioned at a first subscriber station and into the coverage area defined by a [second] WLAN transceiver of [a second] subscriber station." *Id.* at 11:19–25. Upon this movement, "a handover of communications is effectuated from the first WLAN transceiver to [the second] WLAN transceiver" to "permit continued communications with the mobile station." *Id.* at 11:25–29.

D. Illustrative Claim

Of the challenged claims, claims 1 and 11 are independent, and claims 2–10 and 12–20 depend directly or indirectly from either claim 1 or claim 11. Claim 1, reproduced below (disputed limitation emphasized), is illustrative:

> 1. A wireless communication device, comprising:
>
> a first transceiver in direct wireless communication with a terrestrial base station, wherein the terrestrial base station is in direct wireless communication with a plurality of wireless communication devices; and
>
> a second *wireless local area network transceiver* in direct wireless broadband communication with a plurality of computing devices located within a coverage area of the second transceiver, the second transceiver being coupled to the first transceiver wherein;
>
> the first transceiver receives a first signal from the base station, the first signal intended for a first computing device of the plurality of computing devices, the second wireless local area network transceiver determines signal characteristics of the first computing device, and the second transceiver transmits the first signal to the first computing device based on the determined signal characteristics of the first computing device; and

> the second transceiver receives a second signal from the first computing device, the second signal intended for the base station, and the first transceiver transmits the second signal to the base station.

Ex. 1001, 12:52–13:7 (emphasis added).

II. ANALYSIS

A. Principles of Law

"In an [*inter partes* review], the petitioner has the burden from the onset to show with particularity why the patent it challenges is unpatentable." *Harmonic Inc. v. Avid Tech., Inc.*, 815 F.3d 1356, 1363 (Fed. Cir. 2016) (citing 35 U.S.C. § 312(a)(3) (requiring *inter partes* review petitions to identify "with particularity . . . the evidence that supports the grounds for the challenge to each claim")). This burden never shifts to Patent Owner. *See Dynamic Drinkware, LLC v. Nat'l Graphics, Inc.*, 800 F.3d 1375, 1378 (Fed. Cir. 2015) (discussing the burden of proof in *inter partes* review). To prevail, Petitioner must establish the facts supporting its challenge by a preponderance of the evidence. 35 U.S.C. § 316(e); 37 C.F.R. § 42.1(d).

A claim is unpatentable under 35 U.S.C. § 103(a) if "the differences between the subject matter sought to be patented and the prior art are such that the subject matter as a whole would have been obvious at the time the invention was made to a person having ordinary skill in the art to which said subject matter pertains." *KSR Int'l Co. v. Teleflex Inc.*, 550 U.S. 398, 406 (2007). The question of obviousness is resolved on the basis of underlying factual determinations, including: (1) the scope and content of the prior art; (2) any differences between the claimed subject matter and the prior art; (3)

the level of skill in the art; and (4) objective evidence of nonobviousness, i.e., secondary considerations. Anticipation is the epitome of obviousness. *See Cohesive Techs., Inc. v. Waters Corp.*, 543 F.3d 1351, 1364 (Fed. Cir. 2008) (explaining it is commonly understood that prior art references that anticipate a claim will usually render that claim obvious); *Mendenhall v. Cedarapids, Inc.*, 5 F.3d 1557, 1563 (Fed. Cir. 1993) (holding that verdict of nonobviousness was not inconsistent with verdict of anticipation by prior public use, despite "legal homily" that anticipation is the epitome of obviousness).

B. Level of Ordinary Skill in the Art

"Patent Owner agrees with Petitioner that a person of ordinary skill in the art ('POSITA') for this patent would have been a telecommunications engineer having the equivalent of a bachelor's degree or equivalent knowledge obtained through work experience, including several years of experience in the design of telecommunications systems." Prelim. Resp. 4; *see* Pet. 10; PO Resp. 9. We adopt the parties' agreed-upon description of the level of ordinary skill in the art.

C. Claim Construction

The Board interprets claims of an unexpired patent using the broadest reasonable construction in light of the specification of the patent in which they appear. *See* 37 C.F.R. § 42.100(b); *Cuozzo Speed Techs., LLC v. Lee*, 136 S. Ct. 2131, 2144–45 (2016). Under this standard, absent any special definitions, claim terms carry their ordinary and customary meaning, as would be understood by one of ordinary skill in the art, in the context of the entire disclosure. *In re Translogic Tech., Inc.*, 504 F.3d 1249, 1257 (Fed.

Cir. 2007). Below we interpret the term "wireless local area network transceiver" (also referred to in the patent as "WLAN transceiver" (Ex. 1001, 8:5)). We determine no other terms require express construction. *Vivid Techs., Inc. v. Am. Sci. & Eng'g, Inc.*, 200 F.3d 795, 803 (Fed. Cir. 1999).

1. Background

The Petition proposes a construction for the term "wireless communication device." Pet. 14–15. The Preliminary Response proposes constructions for the terms "terrestrial base station" and "wireless local area network transceiver." Prelim. Resp. 16–20. In the Institution Decision, we preliminarily construed the term "terrestrial base station" as "a ground-based device that provides connectivity of devices (mobile or otherwise) to other communication networks, such as telephone or data networks." Inst. Dec. 8–12. We did not expressly construe any other claim terms.

The Patent Owner Response argues we should construe the term "wireless local area network transceiver," as recited in claims 1 and 11, to mean "a transceiver that provides direct wireless connectivity between multiple computing devices within a limited geographic area." PO Resp. 16. Petitioner replies that we should interpret the term to mean "a transceiver that forms part of a local network and facilitates communications with devices in the network." Reply 5.

2. "WLAN transceiver"

Challenged independent claims 1 and 11 recite a wireless communication device/system comprising a "wireless local area network transceiver" (hereinafter also referred to as "WLAN transceiver") (Ex. 1001,

12:52, 12:57, 13:37, 14:8–9). The ’555 specification does not expressly define the term “WLAN transceiver.” Therefore, we accord this term its ordinary and customary meaning, as would be understood by one of ordinary skill in the art, in the context of the entire disclosure. *Translogic*, 504 F.3d at 1257.

The ’555 patent describes transceivers as devices that both transmit and receive signals. Claims 1 and 11 recite that each of the first transceiver and second WLAN transceiver transmits and receives signals. Ex. 1001, 12:62, 13:6–7, 14:5, 14:16–17 (reciting “the first transceiver *receives* a first signal” and “the first transceiver *transmits* the second signal” (emphasis added)); Ex. 1001, 12:67–13:1, 13:4, 14:10–11, 14:14 (reciting “the second transceiver *transmits* the first signal” and “the second transceiver *receives* a second signal” (emphasis added)). Similarly, the Summary of the ’555 patent describes transceivers as devices that both transmit and receive signals. *Id*. at 5:32–45 (disclosing “[t]he first transceiver *receives* a first signal,” “the first transceiver *transmits* the second signal,” “the second transceiver *transmits* the first signal,” “the second transceiver *receives* a second signal” (emphasis added)).

Therefore, consistent with its use in the patent, we determine a “transceiver” is a “device that can both transmit and receive signals.”

We turn now to whether the term transceiver had a particular meaning in the context of a WLAN. The ’555 specification describes a WLAN transceiver as a transceiver that defines a WLAN coverage area. Ex. 1001, 8:8–9 (“[t]he WLAN transceiver defines a coverage area 242 defining a cell.”). The specification also states:

> FIG. 5 illustrates another view of the communication system 210, here illustrating an implementation in which a plurality of subscriber stations 214 include WLAN transceivers 238 (shown in FIG. 2) connected to corresponding integrated access devices 224 (also shown in FIG. 2). The coverage areas 242 defined by respective ones of the WLAN transceivers are shown in the figure.

Id. at 11:6–12. The specification explains that the WLAN transceiver is capable of communicating (transmitting and receiving radio signals over radio links) with mobile stations within the network defined by the transceiver. *Id.* at 8:9–13 (stating "[a] mobile station 244 positioned within the cell 242 is capable of communicating with transceiver 238. That is to say, the radio link 246 is formable between the [WLAN] transceiver 238 and the mobile station 244."). This understanding of WLAN transceiver is consistent with the claim language. Claim 1 recites the WLAN transceiver is "in direct wireless broadband communication with a plurality of computing devices located within a coverage area of the second [WLAN] transceiver." Ex. 1001, 12:57–60 (emphasis added). We determine, therefore, that a WLAN transceiver is a transceiver that defines the coverage area of the wireless local area network.

The specification does not specify dimensions for the area covered by a WLAN transceiver, but indicates the area is relatively small. Ex. 1001, 4:66–5:3 (describing the communication range of mobile stations in "micro-cellular networks, private networks, and WLANs" as "relatively small"). The specification's description is consistent with dictionary definitions of the term "local area network" ("LAN"), which describe a LAN coverage area as being limited, relatively limited, and small, but which do not provide specific dimensions. PO Resp. 18 (citing Ex. 2008, 392 ("A computer

network located on a user's premises within a *limited geographical area*." (emphasis added)); Ex. 2009, 276 ("A group of computers and other devices dispersed over a *relatively limited area* and connected by a communications link that enables any device to interact with any other on the network." (emphasis added)); Ex. 2010, 331 ("A system in which personal computers and electronic office equipment are linked together (usually with a wiring-based cabling scheme) within a *small area* to form a network." (emphasis added))). The specification also enumerates a non-limiting list of exemplary subscriber premises, of which WLAN coverage areas may be comprised, including "different types of residential and commercial buildings, including single family homes, multi-tenant offices, small business enterprises 'SBE', medium business enterprises (MBE), and so-called 'SOHO' (small office/home office) premises." Ex. 1001, 6:58–63. The specification also discloses the WLAN coverage area may be a cell, *e.g.*, a cellular coverage area, and uses the terms "coverage area" 242 and "cell" 242 interchangeably. *Id.* at 6:36, 8:8–13.

The '555 patent also indicates the signals transmitted and received by a WLAN transceiver are wireless. The claims recite a "wireless communication device[/system]," and recite that the WLAN transceiver is "in direct wireless broadband communication." Ex. 1001, 12:52, 12:57–58, 13:37, 13:49–14:1. The specification also discloses a WLAN transceiver being in radio, *e.g.*, wireless, communication. Ex. 1001, 8:14–16.

Therefore, applying the broadest reasonable interpretation, in light of the disclosure of the '555 patent, we interpret the term "wireless local area network transceiver" as "a transceiver that transmits and receives wireless

signals and defines a coverage area that is relatively small or geographically limited." We further determine that the coverage area may be a "cell."

We disagree with the approach taken by Petitioner and Patent Owner, discussed below (*infra* §§ II.C.3–4), of relying on the definition of a network (*i.e.*, LAN or WLAN), or of requiring a WLAN transceiver to form part of a WLAN. The claim term at issue does not itself require a wireless local area network, but rather recites a particular type of transceiver. Nothing in the specification or claims indicates the term WLAN transceiver should be construed to require any of the features set forth in the parties' proposed constructions. That no WLAN is required is consistent with an ordinary use of the term "transceiver" in the context of networks provided in Webster's New World Computer Dictionary, which defines "transceiver" in the context of two different networks—LANs and wireless wide area networks ("wireless WANs"). Webster's New World Computer Dictionary 377 (10th ed. 2003) (Ex. 3001). In the context of LANs, the definition of transceiver is an adapter that enables a workstation to connect to network cabling. *Id.* (defining transceiver as "1. In local area networks (LANs), an adapter that enables a workstation to connect to the network cabling."). In the wireless context, the definition specifies that sent and received communication signals are radio, *i.e.*, wireless, signals. *Id.* (defining transceiver as "2. In wireless wide area networks (WANs), a modem that can send and receive data via radio frequencies. See *PDA*."). Notably, although the transceiver may be employed in a network, the features of the network are not imported into the definition of the term transceiver.

3. Petitioner's proposed construction

Petitioner's proposed construction, that a WLAN transceiver is "a transceiver that forms part of a local area network and facilitates communications with devices in the network," is vague. Reply 5. Petitioner does not explain how a WLAN transceiver *forms* part of a LAN or what is meant by *facilitates* communications with devices in the network. Petitioner's construction fails to identify the features a WLAN transceiver would need to have in order to form part of a WLAN and facilitate communications between devices within the WLAN. For reasons discussed above (*supra* § II.C.2), the features of a WLAN transceiver disclosed in the '555 patent include the ability to transmit and receive wireless signals and to define a WLAN coverage area. *See, e.g.*, Ex. 1001, 8:9–31.

4. Patent Owner's proposed construction

As we discussed above, Patent Owner proposes that we construe WLAN transceiver as "a transceiver that provides direct wireless connectivity between multiple computing devices within a limited geographic area."[4] PO Resp. 16. Our interpretation of this term addresses

---

[4] We note that this construction adds narrowing limitations to, and is at odds with, Patent Owner's proposed construction in the Preliminary Response. Patent Owner earlier construed WLAN transceiver as "a transceiver that sends and receives wireless signals in a limited coverage area, such as a home, school, university, hotel, office, residential or commercial building." Prelim. Resp. 18. Like our construction, Patent Owner's original construction acknowledged a WLAN transceiver is a transceiver that transmits and receives wireless signals, and, like our construction, it acknowledged the coverage area to be limited. Patent Owner did not attempt to narrow the construction of WLAN transceiver as it does now. Patent Owner's currently proposed construction would require direct connectivity

Patent Owner's contention that a WLAN provides connectivity within a limited geographic area. Below we address Patent Owner's proposal that a WLAN transceiver "provides direct wireless connectivity between multiple computing devices."

As an initial matter, the claim language does not support requiring direct wireless connectivity between multiple computing devices, *i.e.*, directly between two computing devices. The claims recite "direct wireless connectivity," but not "between multiple computing devices" as proposed by Patent Owner. Rather, the claims recite the direct connectivity is between the WLAN transceiver and a plurality of computing devices. Ex. 12:57–60, 13:48–14:1 (Claims 1 and 11 reciting the WLAN transceiver is "in direct wireless broadband communication with a plurality of computing devices."). It is improper to write Patent Owner's proposed language into the claims.

Also, Patent Owner's direct wireless connectivity requirement finds no support in the '555 specification. We agree with Petitioner that not a single embodiment of the specification discloses, much less requires, a WLAN transceiver that provides direct wireless connectivity between multiple computing devices. Reply 3–5. The specification describes a *single* computing device within the WLAN in communication only with the WLAN transceiver, and does not disclose multiple computing devices in direct wireless communication with each other. *See*, *e.g.*, Ex. 1001, 8:4–14, Fig. 2, 11:6–38, Fig. 5; *see also* Reply 4–5. For example, with regard to Figure 2, mobile station 244, *e.g.*, a computing device, does not

---

between multiple devices. Patent Owner does not account for this significant change in course with its construction of WLAN transceiver.

communicate directly with any other computing device, either within or outside of the WLAN. Rather, signals to and from mobile station 244 are communicated *indirectly* to a device—correspondent node 234—*outside* the WLAN (*i.e.*, coverage area 242 of WLAN transceiver 238) via WLAN transceiver 238, IAD 224, base station 212, access remote 228, and communication network 232. Ex. 1001, 8:11–40, Fig. 2 (showing signal path and showing correspondent node 234 is outside area 242 covered by WLAN transceiver 238). With regard to the embodiment illustrated in Figure 5, a single mobile station communicates with a WLAN transceiver within a first WLAN, and upon leaving the coverage area defined by the first WLAN transceiver, communicates with a second WLAN transceiver defining a second WLAN coverage area. *Id.* at 11:6–38, Fig. 5. There is no disclosure in the ’555 patent of direct wireless connectivity between multiple computing devices within the same network, much less of a WLAN transceiver providing such connectivity.

Rather than rely on claim language and the specification to support the direct connectivity between devices requirement, Patent Owner relies on extrinsic evidence, including arguments regarding extrinsic definitions of the terms WLAN and LAN and arguments regarding a specific WLAN standard. For reasons discussed below, the record does not support Patent Owner’s contention that direct connectivity between multiple computing devices was an essential feature of WLANs or LANs. Furthermore, to the extent this non-essential feature is described in the art, a WLAN transceiver has not been shown to provide it. *See*, *e.g.*, Reply 4 (“If there were direct wireless connectivity between the ’555 patent’s personal computers, then the wireless local area network transceiver would play no role in providing it.”).

a. IEEE 802.11

In support of its contention that a WLAN transceiver must provide direct wireless connectivity between multiple computing devices, Patent Owner relies on features of a specific wireless network standard, IEEE 802.11 ("802.11"), also known as Wi-Fi. PO Resp. 19–21. As a basis for incorporating selected features of 802.11 into the general definition of WLAN, Patent Owner essentially argues a skilled artisan would have understood WLAN to be limited to wireless networks compliant with 802.11, to the exclusion of other WLAN networks that are based on other protocols or standards. Patent Owner asserts its declarant, Mr. Struhsaker, "establishes" that a skilled artisan in the relevant time frame would have understood that WLAN "meant a wireless network compliant with the IEEE 802.11 Wi-Fi industry standard, the accepted industry standard for wireless computer networks by 2001." PO Resp. 19 (citing Ex. 2007 ¶ 29 (stating 802.11 was "the accepted industry standard for wireless local area networks" and a skilled artisan "would have understood that a [WLAN] meant a wireless network compliant with . . . 802.11")). Mr. Struhsaker provides only a bare assertion, citing no supporting or corroborating evidence. Ex. 2007 ¶ 29. Contrary to his assertion, several competing WLAN standards were well known as of the critical date. For example, Mr. Struhsaker cites a 1997 reference titled "IEEE 802.11 Wireless Local Area Networks" (hereinafter "the 1997 IEEE article") (Ex. 2015) (Ex. 2007 ¶ 49, citing Ex. 2015) that describes HIPERLAN as an alternative WLAN standard to 802.11:

> Currently, there are two emerging WLAN standards: the European Telecommunications Standards Institute (ETSI)

> High-Performance European Radio LAN (HIPERLAN) and the 802.11 WLAN.

Ex. 2015, 117. Mr. Struhsaker nonetheless testifies that by 2001, 802.11 was the accepted industry standard for wireless local area networks, but his testimony is contradicted by the evidence. Ex. 2007 ¶ 29. For example, Mr. Struhsaker cites a 2001 reference titled "Wireless communication: the next wave of Internet technology" (hereinafter "the 2001 Wireless article") (Ex. 2012) (Ex. 2007 ¶ 38, citing Ex. 2012) that acknowledges not all WLANs conformed to 802.11 at the time:

> *It is essential to adopt technology standards for wireless LANS*. Unfortunately, most standards do not remain in place long because constantly evolving technology advances require yet another change. *The standard chosen* by a business use should be one that it can afford, and that is interoperable with technologies such as Internet Protocol (IP), Ethernet, Point-to-point Protocol (PPP), and Asynchronous Transfer Mode (ATM).

Ex. 2012, 223 (emphasis added). Furthermore, the 2001 Wireless article indicates 802.11 had not yet been widely adopted. *Id.* at 225 ("As government regulations become more relaxed, the IEEE 802.11b standard shows promise of being widely adopted by the industry"). Therefore, we find a skilled artisan as of 2001 would not have understood WLAN to mean a network compliant with 802.11.

In addition, the '555 patent does not mention 802.11, much less limit the disclosure of WLAN to 802.11. Reply 9–11.

For the foregoing reasons, it is improper to limit the understanding of the term WLAN to networks that comply with 802.11, or to read selected features of 802.11 into the definition of WLAN. *See E-Pass Tech., Inc. v.*

3Com Corp., 343 F.3d 1364, 1368 (Fed. Cir. 2003) (holding it was improper for a district court to rely on the ANSI industry standard to limit the dimensions of a recited "electronic multi-function card" where there was no basis in the ordinary meaning of the claim term or in the claim language to impose restrictions of the industry standard).

The dissent finds, nonetheless, that use of the known term "wireless local area network" in the '555 patent would have brought to the mind of one of skill in the art the 802.11 standard for wireless local area networks. Even if this were so, there is no basis to import features of 802.11 into the ordinary meaning of the term WLAN or into the claim language. Moreover, even if we were to import features of 802.11 into our construction, direct wireless connectivity between multiple devices was not an essential feature of 802.11, much less of a WLAN. *E-Pass Tech.*, 343 F.3d at 1368. Patent Owner asserts "an essential, defining feature of a wireless local area network under the IEEE 802.11 Wi-Fi standard was that the devices on the network could directly communicate with one another '<u>within the network</u>.'" PO Resp. 20 (citing Ex. 2007 ¶¶ 45–47). Patent Owner states this feature of 802.11 was recognized in the 1997 IEEE article. *Id.* (citing Ex. 2015, 117). We disagree that this feature is described as essential. The 1997 IEEE article describes one possible 802.11 network configuration—ad hoc—that facilitated direct connectivity between computing devices. Ex. 2015, 117 ("An ad hoc network is a deliberate grouping of stations into a single BSS for the purposes of internetworked communications without the aid of an infrastructure network."); *see also* Reply 17 ("Patent Owner also cites to an article titled 'IEEE 802.11 Wireless Local Area Networks (EX2015) to support its construction, and relies on a type of communication called 'ad-

hoc.'"). The ability to create ad hoc networks is not described as an essential feature of a WLAN. On the contrary, the 1997 IEEE article describes an alternative to the ad hoc network configuration—called infrastructure—that did not involve direct wireless connectivity between multiple computing devices. *Id.* (explaining that infrastructure networks "in the context of 802.11 are established using [access points]" through which traffic is sent); *see also* Ex. 1020 ¶ 36 ("The [802.11] specifications of wireless LAN outlines *two possible modes* of operations: client/server and ad hoc mode WLAN. In the client/server WLAN—also often called as an infrastructure configuration—terminals communicate with base stations or access points (AP), which form the coverage area." (emphasis added)). A network using the infrastructure WLAN described by 802.11 was no less a WLAN than a network using the ad hoc configuration described by 802.11. *See* Ex. 2014, 12–13 (describing "Infrastructure WLAN" versus "Ad Hoc WLAN"); *see also id.* at 3 ("The specifications of WLAN defines also an ad hoc mode . . . In the ad hoc mode the whole network is seen as moveable, and is independent of any infrastructure *unlike* GSM or *client/server type WLAN*." (emphasis added)).

The 2001 Wireless article Mr. Struhsaker cites also supports a finding that ad hoc networking capability (relied on by Patent Owner for the direct wireless connectivity requirement) was not an essential feature of a WLAN, but instead was one of at least two different possible WLAN configurations. The 2001 Wireless article describes a WLAN configuration, called nomadic, in which communications are centralized though a hub, and therefore there is no direct wireless connectivity between computing devices:

> Another use of wireless LAN technology is to support nomadic access by providing a wireless link between a LAN hub and a mobile data terminal . . . such as a laptop . . . . One example of the utility of such a connection is to enable an employee returning from a trip to transfer data from a personal portable computer to a server in the office . . . users may want to move around with their portable computers and may want access to the servers on a *wired* LAN from various locations.

Ex. 2013, 1 (emphasis added). In addition, the above excerpt discloses that mobile computing devices in the WLAN do not communicate with each other, but instead communicate with a server located on a wired LAN, *i.e.*, outside the wireless LAN (WLAN). *Id.* This is in contrast to the alternative WLAN configuration that allows users to form an ad hoc network in which computers are directly linked:

> Another example of a wireless LAN application is an ad hoc network, which is a peer-to-peer network (no centralized server) set up temporarily to meet some immediate need. For example, a group of employees, each with laptop or palmtop computer, may convene in a conference room for a business or classroom meeting. The employees link their computers in a temporary network just for the duration of the meeting.

Id. The former WLAN configuration allowing for nomadic access is described as a WLAN even though it does not facilitate direct wireless connectivity between multiple computing devices, but instead facilitates a single computing device connecting to a server outside the WLAN. *Id.*

For the foregoing reasons, we find the evidence shows, contrary to Patent Owner's assertion, a skilled artisan in the relevant time frame would not have understood direct wireless connectivity between multiple computing devices to be an essential feature of a WLAN.

To the extent this non-essential feature is present in a network such as an ad hoc network, the evidence does not support a finding that a WLAN transceiver, as opposed to other features or components of the network, would have facilitated direct wireless connectivity between multiple computing devices. There is no disclosure of a WLAN transceiver in a device/system like that of claims 1 and 11 facilitating direct wireless connectivity between multiple computing devices.

b. Dictionary definitions

The dictionary definitions Patent Owner relies on do not support Patent Owner's construction because they do not require direct wireless connectivity between computing devices. PO Resp. 18–19 (citing Ex. 2008, 392; Ex. 2009, 276; Ex. 2010, 331); Reply 11–12. The definitions cited by Patent Owner do not specify whether devices connect directly or indirectly, and therefore do not support the argument that a LAN must allow for direct wireless connectivity between computing devices.

c. Prior court constructions

The constructions of other courts, relied on by Patent Owner, do not dictate a different result. Those proceedings involve patents unrelated to the '555 patent, involve a different record, and involve construction of the terms WLAN and LAN, but not of WLAN *transceiver*. PO Resp. 21–23; Reply 13–14. As we discussed above, we must not read requirements of a WLAN or LAN into our interpretation of the term WLAN transceiver, where such requirements are not necessarily performed by or facilitated by a WLAN transceiver.

In addition, contrary to Patent Owner's assertion, the constructions Patent Owner relies on do not support Patent Owner's direct connectivity between multiple devices requirement. Only one construction is of the term WLAN, which the court construed as "a communications network that provides wireless connectivity via radio waves within a limited geographic area." PO Resp. 21. Notably, this construction indicates wireless connectivity, but does not specify what the connectivity is between, *e.g.*, whether it is between a transceiver/access point and computing devices, or whether is it between computing devices. Also, this construction omits the word "direct" in describing connectivity. The remaining constructions are of the term LAN, not WLAN. They do not specify *direct* connectivity, as opposed to indirect connectivity. PO Resp. 21–23; Reply 11–12. Because these constructions do not specify direct connectivity between multiple computing devices in a network, these constructions do not support Patent Owner's proposed direct connectivity requirement. In addition, the constructions of the term LAN do not describe or implicate a *wireless* LAN *transceiver*, and do not support interpreting the term WLAN transceiver as somehow facilitating direct wireless connectivity between computing devices within the WLAN network.

d. Prosecution history

Patent Owner asserts the phrase "wireless local area network" was added to the term "second transceiver" during prosecution to distinguish the claimed invention from the transceiver of another reference. PO Resp. 17. Review of the claim amendment, and the examiner's and patent applicants' accompanying remarks, does not change our claim interpretation. During

prosecution of the patent application to which the application for the ’555 patent claims priority, Application No. 11/982,458, applicant made numerous amendments to claim 25, including (new language underlined, deleted language struck) “terrestrial base station, “wireless local area network transceiver,” “direct wireless broadband communication,” “the second wireless local area network transceiver determines signal characteristics of the first computing device,” and “the second transceiver transmits the first signal to the first ~~mobile station~~ computing device based on the determined signal characteristics of the first computing device.” Ex. 1013, 2. With regard to these amendments, applicant remarked only that “[t]he determination of signal characteristics and transmitting of a signal based on that determination is simply not shown or suggested by the cited references.” *Id.* at 10. Nothing in applicant’s remarks limits our construction of the term “wireless local area network transceiver.”

5. Dissent

Our dissenting colleague determines we should interpret the term WLAN transceiver as “a transceiver that forms a wireless local area network (WLAN) with a plurality of computing devices and facilitates communications with those devices, *including communications within the network*.” (Emphasis added). With regard to the emphasized language, our colleague explains that “devices within a wireless LAN must be able to communicate with one another within the network ‘without accessing the wide area cellular network or the internet.’” *See also* PO Resp. 20–21 (making the same argument). We disagree because this requirement finds no support in the claim language or the specification.

The specification does not describe a single embodiment in which a plurality of computing devices communicate with each other within the network, *i.e.*, the WLAN, or describe how this would have been accomplished, or describe the role a WLAN transceiver would have had in facilitating this. For example, as we discussed above (*supra* § II.C.4), with reference to Figure 2, the specification describes only one mobile station 244, *e.g.*, a computing device, in communication (via WLAN transceiver 238) with a device *outside* the WLAN, namely with correspondent node 234. Ex. 1001, 8:4–40; *see also id.* at Figure 2 (depicting node 234 as outside WLAN area 242). Notably, the communication is routed through communication network 232, which is an external network (such as a public-switched telephonic network or packet data network like the Internet (Ex. 1001, 7:1–2, 7:59–62)) outside coverage area 242 defined by WLAN transceiver 238. *Id.* Fig. 2. Figure 5, also discussed above (*supra* § II.C.4), and Figure 6, similarly illustrate embodiments in which only a single mobile station is disclosed as being within a particular WLAN coverage area. *Id.* Fig. 5; 11:19–38, 11:54–12:24. There is no disclosure or suggestion that the mobile station is in communication with other stations within the particular WLAN. *Id.* Likewise, none of the other embodiments in the patent (1) disclose a transceiver that forms a WLAN with a plurality of computing devices and facilitates communications with those devices, including communications within the network, (2) describe how this would have been accomplished, or (3) describe the role a WLAN transceiver would have had in accomplishing this.

The dissent relies on disclosure in the specification that a WLAN "provide[s] for radio communications with mobile stations positioned within communication range of such networks." *See* Ex. 1001, 4:64–65. This statement does not support the dissent's construction. It indicates only that mobile stations positioned within the WLAN can communicate with an access point, not that mobile stations can communicate with each other within the network. The specification clarifies this a few lines down, stating "[t]he *access points* are capable of communicating with a group of mobile stations positioned within a micro-cellular, or other area, defined by the access point." *Id.* at 5:6–8 (emphasis added). The specification, like the claims, indicates only that multiple computing devices can communicate with an access point or WLAN transceiver, not that the devices can communicate with each other within the network. The dissent relies also on disclosure indicating the coverage area of a WLAN is "relatively small," *see* Ex. 1001, 4:66–5:12, but nothing in the specification describes, or requires, that mobile stations can communicate with each other within the WLAN without accessing a network outside the WLAN.

The dissent relies also on dictionary definitions of the term "local area network" as evidence a skilled artisan would have understood a WLAN provides for communication among devices within the network, independent of any connection to an additional network. However, this extrinsic evidence does not override the intrinsic record which does not disclose a single embodiment having this feature. In addition, the dissent focuses on definitions of the term "LAN," but as we discussed above the evidence shows there were well known *wireless* LAN configurations as of the critical date that did not involve or facilitate communications between computing

devices within the network without accessing an outside network. *Supra* § II.C.4.a. For example, as we discussed above, in the nomadic WLAN configuration, portable computers connect to a hub to communicate with servers outside the WLAN. Ex. 2013, 1. We interpret WLAN broadly enough to encompass these well-known configurations.

Even if we were to accept the dissent's findings that the terms LAN and WLAN would have been understood to mean a network that must facilitate communication between devices within the network without the communication leaving and reentering the network, there is no evidence such feature necessarily was facilitated by a WLAN transceiver, as opposed so some other component(s) of the network. Accordingly, such requirement should not be read into the term "WLAN transceiver."

D. Asserted Grounds of Unpatentability

Petitioner asserts the following grounds of unpatentability, Pet. 15–71:

References	Basis[5]	Claims challenged
Hohnstein[6] and Phillips[7]	§ 103(a)	1–20
Hohnstein and Agrawal[8]	§ 103(a)	1–20

[5] Because the claims at issue have a filing date prior to March 16, 2013, the effective date of the Leahy-Smith America Invents Act, Pub. L. No. 112-29, 125 Stat. 284 (2011) ("AIA"), we apply the pre-AIA version of 35 U.S.C. § 103.

[6] US 6,816,706 B1, issued Nov. 9, 2004. Ex. 1002.

[7] John A. Phillips & Gerard Mac Namee, *Personal Wireless Communication With DECT and PWT* (1998). Ex. 1003.

[8] US 5,722,051, issued Feb. 24, 1998. Ex. 1005.

E. Overview of Hohnstein (Ex. 1002)

Petitioner asserts Hohnstein is prior art to the ’555 patent under 35 U.S.C. § 102(e), Pet. 3, which Patent Owner does not dispute. Hohnstein issued as a patent after the critical date of the ’555 patent. However, the patent application leading to Hohnstein was filed on September 8, 2000, before critical date of the ’555 patent. Therefore, we determine Hohnstein is prior art to the ’555 patent under § 102(e).

Hohnstein describes a communication system with “a plurality of access points 22 which may be, for example, a local radio access point (LRAP).” Ex. 1002, 4:9–11. Figure 1 of Hohnstein (annotated by Petitioner) is reproduced below:

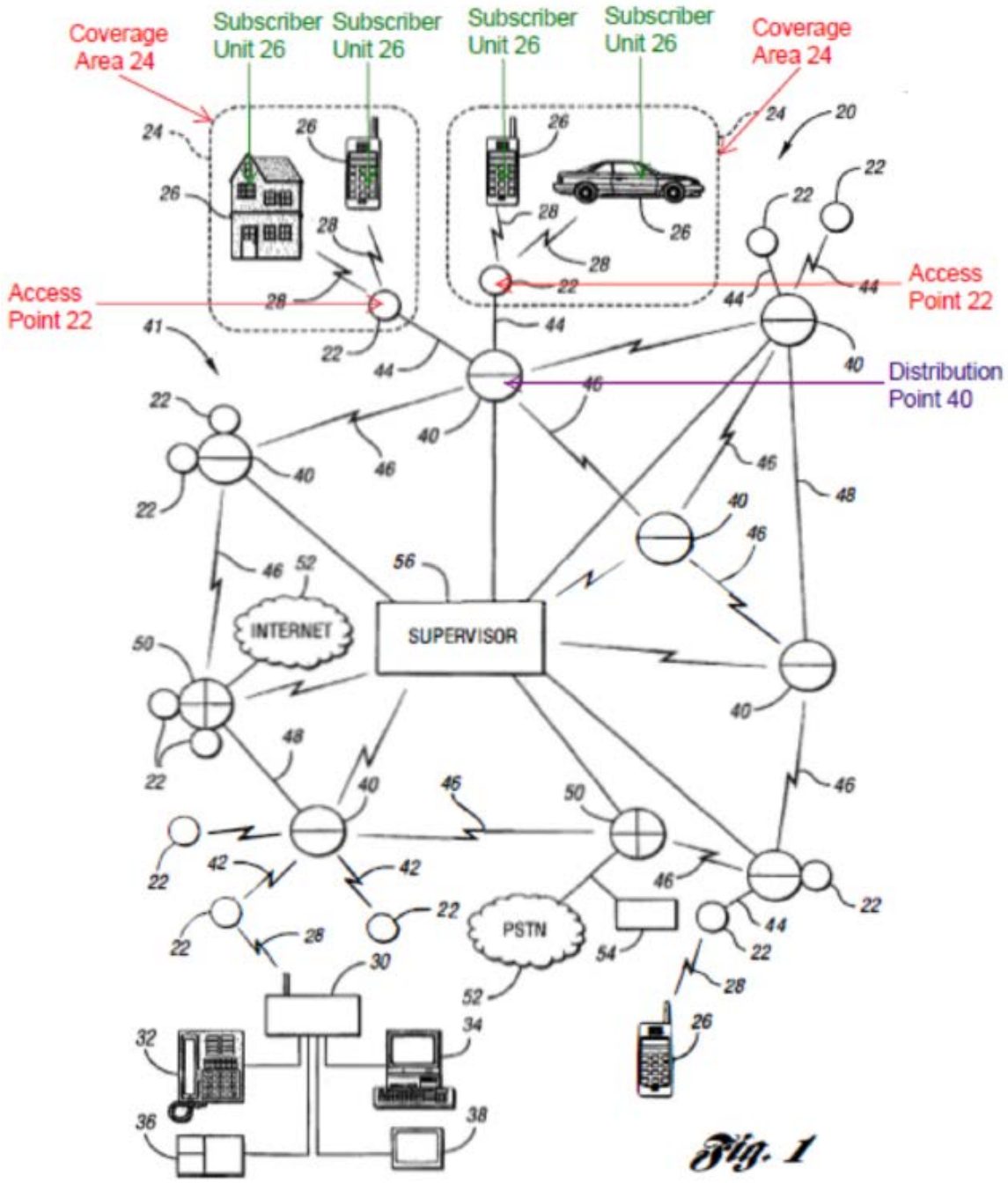

Pet. 16; Ex. 1002, Fig. 1. Figure 1 illustrates Hohnstein's communication system in which "[e]ach access point 22 defines coverage area 24 such as, for example, a cell, covering a reception range of access point 22." *Id.* at 4:11–13. Subscriber units 26 within the coverage area can communicate

wirelessly with access point 22. *Id.* at 4:16–18. Each access point, in turn, communicates with at least one distribution point 40 over radio link 42, or may be wired or cabled to distribution point 40 through wireline link 44, or may be packaged with distribution point 40. *Id.* at 5:42–48.

Hohnstein's distribution points 40 route packets within the network, such as from another distribution point, from subscriber unit 26 in communication with distribution point 40 through access point 22, or from an external communication system, to an access point 22, to another distribution point 40, or to other networks. *Id.* 5:57–59, 6:34–48, 8:49–54. Hohnstein's access point 22 may be embodied as an antenna module 502 with multiple transceivers. *See id.* at 13:40–44, 15:7–12, Fig. 9, Fig. 11.

F. Obviousness Over Hohnstein and Phillips

Petitioner contends claims 1–20 of the '555 patent would have been obvious over the combination of Hohnstein and Phillips. Pet. 15–55. Patent Owner disputes Petitioner's contentions on the grounds that the cited prior art neither discloses, nor renders obvious, a "wireless local area network transceiver." PO Resp. 24–31. Patent Owner does not otherwise dispute Petitioner's contentions. For reasons that follow, Petitioner has established claims 1–20 are obvious over Hohnstein and Phillips.

1. Discussion

a. Independent Claim 1

(1) Preamble

Petitioner asserts Hohnstein's access point 22 is a "wireless communication device," as recited in the preamble of claim 1. Pet. 23–24. Petitioner argues access point 22 is a wireless communication device based

on Hohnstein's disclosure that access point 22 "communicates via wireless link 28 with a subscriber unit 26 within a coverage area 24 provided by the access point," and "also communicates with at least one base station 40 via a radio link 42." *Id.* (citing Ex. 1002, 4:17–19, 5:42–47).

We find, on the basis of the evidence and explanation provided by Petitioner, that Hohnstein discloses a wireless communication device.

(2) "[The wireless communication device comprising:] a first transceiver in direct wireless communication with a terrestrial base station"

Petitioner asserts Hohnstein's backhaul data terminal 554 is a "first transceiver" and distribution point 40 is a "terrestrial base station," as recited in claim 1, and that these structures are in direct wireless communication. Pet. 24–26.

With regard to a "first transceiver," Petitioner argues terminal 554 is a transceiver because attached to it is backhaul antenna 552 that transmits/receives data packets over radio link 42. *Id.* at 24 (citing Ex. 1002, 2:50–59, 3:6–8, 3:21–23, 5:42–47, 15:15–18, 16:9–18).

Petitioner argues a skilled artisan would have understood distribution point 40 is a base station based on Hohnstein's description of distribution point 40 as providing connectivity between devices and communication networks. *Id.* at 17–19; Ex. 1008 ¶ 67. Petitioner relies on disclosure that distribution point 40 (1) receives data packets from other distribution points 40 and forwards them to access points 22, Pet. 17 (citing Ex. 1002, 4:47–49, 5:42–47, 6:34–43), (2) receives packets from subscriber units 26 via access points 22, and receives packets from external communication systems, *id.* (citing Ex. 1002, 4:47–49, 6:38–43, 6:55–62), and (3) "can include a back end communication interface 106 for connecting with additional distribution

points 40 and a supervisor 56" wherein "[b]ack end communication interface 106 also can provide connection between the distribution point 40 and the Internet," *id.* (citing Ex. 1002, 8:49–52). Dr. Kotzin opines that a skilled artisan would have understood devices that "provide[] connectivity of devices (mobile or otherwise) to other communications networks, such as telephone or data networks," to be base stations, and based on the above description would have understood distribution point 40 provides such connectivity so as to be considered a base station. Ex. 1008 ¶ 67. Petitioner argues a skilled artisan would have understood distribution point 40 is terrestrial because "it is a ground based structure that is attached to the ground by the pole or building it is mounted on." Pet. 25 (citing Ex. 1002, 9:22–24; Ex. 1008 ¶ 83).

Petitioner asserts backhaul data terminal 554 (asserted first transceiver) and distribution point 40 (asserted terrestrial base station) are in direct wireless communication based on disclosure that the backhaul antenna of terminal 554 is in wireless communication, and connects via radio link 42, with distribution point 40. Pet. 24 (citing Ex. 1002, 2:50–59, 3:6–8, 3:21–23, 5:42–47, 15:15–18, 16:9–18); *see, e.g.*, Ex. 1002, 3:21–23 (stating "[a]n access point may be in wireless communication with the distribution point through a backhaul antenna."); *see also id.* at Fig. 1 (showing direct communication between access point 22 (which includes the backhaul antenna) and distribution point 40 over wireless radio links 42).

We find, on the basis of the evidence and explanation provided by Petitioner, that Hohnstein discloses "a first transceiver in direct wireless communication with a terrestrial base station."

(3) "wherein the terrestrial base station is in direct wireless communication with a plurality of wireless communication devices"

Petitioner asserts distribution point 40 (asserted terrestrial base station) is in direct wireless communication with at least two access points 22 (asserted wireless communication devices). Pet. 26. Petitioner relies on Figure 1 of Hohnstein (annotated by Petitioner), which is reproduced below.

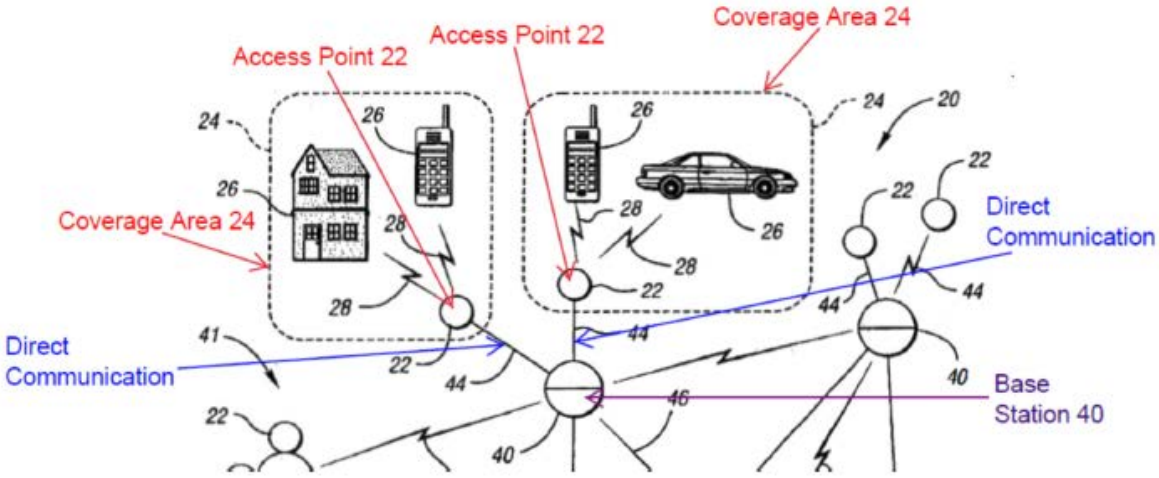

Pet. 26 (citing Ex. 1001, Fig. 1 with annotations). Annotated Figure 1 depicts distribution point 40, annotated in purple as Base Station 40, in direct wireless communication via links 44 with two access points 22, identified by blue arrows. We are persuaded by Petitioner's arguments based on Figure 1, which shows distribution point 40 in direct wireless communication with multiple access points 22.

We find, on the basis of the evidence and explanation provided by Petitioner, that Hohnstein discloses "wherein the terrestrial base station is in direct wireless communication with a plurality of wireless communication devices."

(4) "and [the wireless communication device comprising:] a second wireless local area network transceiver in direct wireless broadband communication with a plurality of computing devices located within a coverage area of the second transceiver"

Petitioner asserts Hohnstein discloses "a second wireless local area network transceiver in direct wireless broadband communication with a plurality of computing devices located within a coverage area of the second transceiver." Pet. 27–28. As we discussed above, we interpret the term WLAN transceiver to mean "a transceiver that transmits and receives wireless signals and defines a coverage area that is relatively small or geographically limited." We further determine that the coverage area may be a "cell."

For disclosure of a second WLAN transceiver, Petitioner relies on Hohnstein's disclosure of access data terminal 566, which includes antennas 570 and 574. *Id.* (citing Ex. 1002, 4:11–14, 15:33–34, 38–40). Because access data terminal 566 is incorporated into access point 22, the parties and Hohnstein sometimes refer to access point 22 in describing the transceiver.

Petitioner relies on disclosure that "[a]ccess point 22, which is formed by antenna module 502, is a local radio access point (LRAP) and defines a coverage area 24 using antennas 570 and 574 attached to access data terminal 566." Pet. 27 (citing Ex. 1002, 4:11–14, 15:33–34, 15:38–40). Petitioner argues that because access data terminal 566 and antennas 570 and 574 "define a local area network by defining coverage area 24," "[a]ccess data terminal 566 is . . . a wireless local area network transceiver." *Id.* at 27–28. We agree with Petitioner.

Applying our construction of the term WLAN transceiver, we find Hohnstein discloses a wireless transceiver that *defines a coverage area* that is *relatively small or geographically limited*, wherein the coverage area may be a *cell*, and therefore discloses a WLAN transceiver. Hohnstein discloses, for example, "[e]ach access point 22 *defines coverage area 24 such as, for example, a cell*, covering a reception range of access point 22." Ex. 1002, 4:12–14 (emphasis added). We note Hohnstein's disclosure of access point 22 defining a coverage area such as a cell (Ex. 1002, 4:12–14) is similar to the '555 patent's disclosure of WLAN transceiver 238 "defin[ing] a coverage area 242 defining a cell" (Ex. 1001, 8:8–9).

For disclosure of a second WLAN transceiver "in direct wireless broadband communication with a plurality of computing devices located within a coverage area of the second transceiver," as recited in claim 1, Petitioner relies on disclosure of two-way wireless links 28 between access point 22 (which includes the asserted WLAN transceiver) and multiple subscriber units 26 (asserted plurality of computing devices) within coverage area 24. Pet. 27–28 (citing Ex. 1002, 4:17–19, Fig. 1). Petitioner argues the communication is direct because there are no intervening nodes between access point 22 and multiple subscriber units 26. *Id.* We find Hohnstein discloses this claim limitation based on, for example, Figure 1 of Hohnstein. Reproduced below is a portion of Figure 1 annotated by Petitioner.

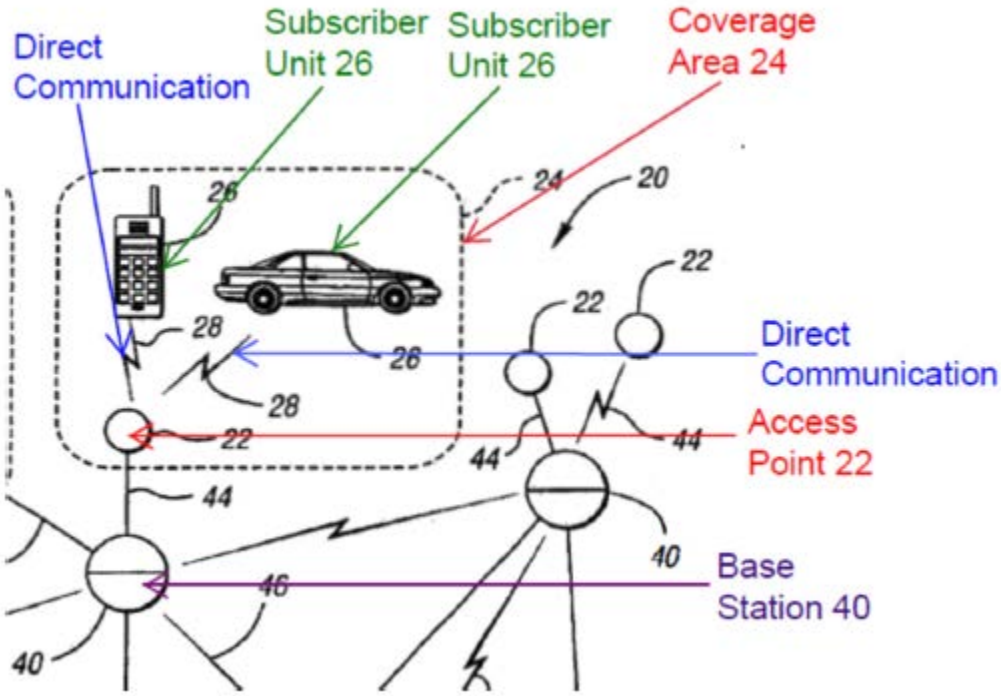

Pet. 28 (citing Ex. 1001, Fig. 1 with annotations). This portion of annotated Figure 1 illustrates direct wireless links 28 between access point 22 and a plurality of subscriber units 26 (a mobile phone and a car) located within coverage area 24 defined by access point 22.

Patent Owner contends data terminal 566 is a not a wireless local area network transceiver. PO Resp. 24–29. In support of its contention, Patent Owner argues Petitioner has not shown devices in coverage area 24 "form a network that directly connects the devices in the coverage area." *Id.* at 25. Nowhere does claim 1 recite this as a requirement. For reasons we discussed above with regard to claim construction, we do not read this requirement into the term "WLAN transceiver." *Supra* §§ II.C.2, II.C.4.

We note further that there is no evidence a WLAN transceiver is involved in directly connecting devices. For example, in reference to the ad hoc-type 802.11 WLAN configuration upon which Patent Owner relies for

the direct connectivity requirement, the 1997 IEEE article discloses communications between devices are *not* channeled through an access point. Ex. 2015 (stating that in an ad hoc network "[a]ny station can establish a direct communications session with any other station in the BSS, *without the requirement of channeling all traffic through a centralized access point* (AP)" (emphasis added)). In other words the access point, of which the WLAN transceiver is a part, is not involved in directly connecting computing devices within the network.

Petitioner replies, and we agree, a further problem with Patent Owner's argument is that if computing devices directly connected within the coverage area, the WLAN transceiver would not be involved because the WLAN transceiver is part of an intervening device between computing devices. If the WLAN transceiver were involved in facilitating the connection, the connection would be indirect. Reply 4–5.

Patent Owner argues also that Hohnstein does not disclose a WLAN transceiver because "devices in the 'coverage area'" have not been shown to automatically form a network. PO Resp. 25. Patent Owner does not argue the ability of devices to automatically form a network should be part of the construction of the term WLAN transceiver, nor explain why, if this feature were present in a network, this feature would have been provided by the WLAN transceiver. Neither the claims nor the specification disclose this feature.

Patent Owner argues also that Hohnstein's access data terminal 566 is not a WLAN transceiver because it transmits to a wide area network, rather than a local area network. PO Resp. 25. Patent Owner bases its argument on an assertion that access points 22 (which include the asserted WLAN

transceiver) are the same structurally as distribution points 40. PO Resp. 25–26. Patent Owner argues that as a result "access point 22 necessarily transmits a wireless wide area network signal" making access point 22 a "wireless wide area network transceiver, not a wireless local area transceiver." *Id.* at 26.

Patent Owner's argument that access points 22 are the same structurally as distribution points 40 is based on Hohnstein's description of a non-limiting embodiment that "[d]istribution points 40 are always peers at the IP and ATM layer, while access points 22 are clients of distribution points 40. As such, each ATM/IP switch 300 functions as a server when operating as distribution point 40 and as a client when operating as access point 22." Ex. 1002, 11:15–20. This cited disclosure is in reference to Figure 5. Patent Owner omits discussion of the preceding sentences, which disclose that the access point being discussed is a *second* access point that has the capability to function as a distribution point 40. Ex. 1002, 11:5–7 ("Referring now to FIG. 5, a drawing illustrating the addition of a second access point is shown. Access point 22 has the capability to function as a distribution point 40."). This disclosure is non-limiting as to what can be an access point. Hohnstein teaches access points 22 could be a number of different structures. This is evident from Hohnstein's disclosure with reference to Figure 1 that "access points 22 . . . may be, *for example*, a local radio access point (LRAP)." Ex. 1002, 4:9–12 (emphasis added). Hohnstein teaches that the antennas of access points 22 "may be adapted to the requirements of communication system 20 including data rates, access frequencies, backhaul frequencies, regulations, mounting structures, noise, obstructions, disturbances, and the like." Ex. 1002, 16:62–65. We find this

disclosure, in view of additional disclosure in Hohnstein discussed below, indicates a skilled artisan would have understood the antennas of access points 22 could have been adapted for small or geographically limited coverage areas.

For example, Petitioner argues a skilled artisan would have understood Hohnstein teaches access point 22 may provide coverage for a local area network that is limited in geographic scope. Reply 19. Petitioner relies, for example, on Hohnstein's disclosure that access point 22 "may be, for example, a *local* radio access point" that defines the coverage area of a cell. *Id.* (citing Ex. 1002, 4:9–12) (emphasis added). Petitioner also argues a skilled artisan would have understood from Figure 1, and similar Figure 3, the coverage area defined by Hohnstein could be limited geographically. An annotated version of Figure 1 is reproduced below.

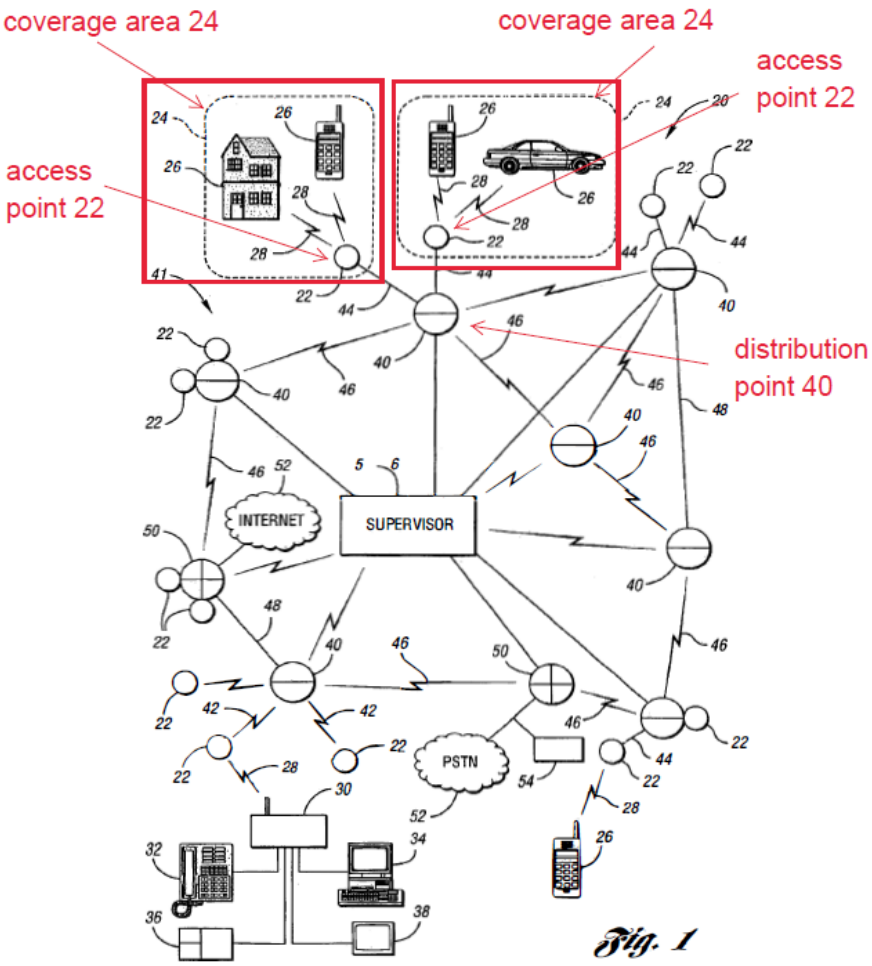

Figure 1 illustrates an exemplary fixed wireless access network. Ex. 1002, 6:23–24. Figure 1 is annotated to highlight a plurality of coverage areas 24 defined by access points 22. Each of access points 22 is shown to be in communication with the same distribution point 40, which in turn is shown to be in communication with other distribution points 40 and with supervisor 56. We find credible Dr. Kotzin's testimony that a skilled artisan would have understood coverage areas 24, as shown in Figure 1, could be relatively small coverage areas. Ex. 1020 ¶ 26. Hohnstein discloses coverage area 24 may be a cell defined by a local radio access point. Ex. 1002, 4:9–12. Applying ordinary usage of the term "local," we find it

reasonable that a skilled artisan would have understood the term "*local* radio access point" would have indicated the access point could have covered a local coverage area. In addition, as we discussed above, consistent with the '555 specification's disclosure that WLAN transceiver 238 defines a coverage area defining a cell (Ex. 1001, 8:8–9), we have determined the area covered by a WLAN transceiver would have included a cell. *Supra* § II.C.2.

Patent Owner also argues "the absolute maximum diameter of a wireless local area network is approximately 1000 feet under perfect conditions," and argues a skilled artisan would have understood the range of Hohnstein's access point 22 exceeded 1000 feet. *Id.* at 27–30. This maximum diameter is based on Mr. Struhsaker's estimate, which he states is consistent with extrinsic evidence describing ranges of various WLANs. *Id.* at 27 (citing Ex. 2007 ¶¶ 36–40). As we discussed above with regard to claim construction, the intrinsic record and external dictionary definitions define the coverage area of a LAN and WLAN in relative terms, without limiting them to specific dimensions. The '555 patent teaches the coverage area of a WLAN is "small." Ex. 1001, 4:60–5:3. However, the patent does not limit the area to specific dimensions. The patent discloses also that "[t]he WLAN transceiver defines a coverage area 24 defining a cell," but does not disclose specific dimensions. In addition, the patent suggests non-limiting, exemplary WLAN coverage areas, describing subscriber premises as including "many different types of residential and commercial buildings, including single family homes, multi-tenant offices, small business enterprises (SBE), medium business enterprises (MBE), and so-called 'SOHO' (small office/home office) premises," but does not limit the area to any specific dimensions. *Id.* at 6:58–63. Not even the references upon

which Mr. Struhsaker relies limit the range of a WLAN coverage area, but instead describe ranges that were typical. Ex. 1007 ¶¶ 38–40 (citing Ex. 2012 ¶ 3.2.1; Ex. 2013, 2; Ex. 2104, 13). In view of the claim language and the ’555 disclosure, it would be improper to read a maximum diameter of 1000 feet into the language of the claims.

Although our interpretation of WLAN transceiver does not limit the diameter of the area defined by the transceiver to 1000 feet, we agree with Petitioner that a skilled artisan would have understood coverage area 24 defined by Honhstein’s local radio access point 22 would have included small or geographically limited areas including areas with a diameter less than 1000 feet. Reply 20–21. Petitioner argues a skilled artisan would have understood the coverage area in Hohnstien is geographically limited based on disclosure that the “exact shape of coverage area 24 depends on a variety of factors including the type of antenna 574, frequency of transmission, local geography, and nearby obstructions.” *Id.* at 21 (quoting Ex. 1002, 15:40–43). In addition, as we discussed above, we find Hohnstein indicates the area could be small based on disclosure of using a *local* radio access point and based on depiction in Figures 1 and 3 of coverage areas 24 as relatively small areas covering a house and associated devices. *Id.* at 21–25.

We find, on the basis of the evidence and explanation provided by Petitioner, that Hohsntein discloses “[the wireless communication device comprising:] a second wireless local area network transceiver in direct wireless broadband communication with a plurality of computing devices located within a coverage area of the second transceiver.”

(5) "the second transceiver being coupled to the first transceiver"

We find, on the basis of the evidence and explanation provided by Petitioner, that Hohnstein discloses this limitation because Hohnstein discloses backhaul data terminal 554 (asserted first transceiver) is connected to access data terminal 566 (asserted second transceiver) via junction box 562. Pet. 29 (citing Ex. 1002, 15:25–26, 15:31–32).

(6) "wherein; the first transceiver receives a first signal from the base station, the first signal intended for a first computing device of the plurality of computing devices"

We find, on the basis of the evidence and explanation provided by Petitioner, that Hohnstein discloses this limitation because Hohnstein discloses backhaul data terminal 554 (asserted first transceiver) receives packets (asserted first signal) from distribution point 40 (asserted base station), and that the packets are intended for a subscriber unit 26 (asserted first computing device) of a plurality of subscriber units 26 (asserted plurality of computing devices). Pet. 29–30 (citing Ex. 1002, 2:50–54, 4:17–19, 4:47–49, 6:38–43, 16:10–14; Ex. 1008 ¶ 95).

(7) "the second wireless local area network transceiver determines signal characteristics of the first computing device, and the second transceiver transmits the first signal to the first computing device based on the determined signal characteristics of the first computing device"

Petitioner argues Hohnstein discloses a "second [WLAN] transceiver determin[ing] signal characteristics of the first computing device," relying on disclosure that access point 22 (formed by access data terminal 566—the asserted second WLAN transceiver) receives signals from subscriber unit 26 (asserted first computing device) including quality error bit rate. Pet. 30 (citing Ex. 1002, 8:7–10, 8:13–15, 8:20–25, 8:28–31). Petitioner relies,

inter alia, on disclosure that access point 22 determines the quality error bit rate for signals from subscriber unit 26, wherein quality error bit rate reflects noise, demand, and connectivity associated with the subscriber unit. Petitioner argues quality error bit rate therefore reflects signal characteristics of the subscriber unit. *Id.* at 31–32 (citing Ex. 1002, 5:8–11; Ex. 1008 ¶ 99). Petitioner argues transmissions to subscriber unit 26 are "based on" the quality error bit rate (asserted determined signal characteristics) because services such as audio and video streaming will reduce the frame rate of the data (asserted first signal) sent to subscriber unit 26 as noise increases as indicated by quality error bit rate. *Id.* at 31 (citing Ex. 1002, 5:12–19; Ex. 1008 ¶¶ 99–100). We find, on the basis of the evidence and explanation provided by Petitioner, that Hohnstein discloses "the second wireless local area network transceiver determines signal characteristics of the first computing device, and the second transceiver transmits the first signal to the first computing device based on the determined signal characteristics of the first computing device."

Petitioner argues that "[t]o the extent that the patent owner argues or may argue that *Hohnstein* does not explicitly disclose that access terminal 566 (the identified second transceiver) determines signal characteristics of a computing device and transmits a signal to the computing device based on the determined signal characteristics, *Phillips* teaches these elements." Pet. 32. This contingency has not occurred—Patent Owner does not argue Hohnstein fails to make such disclosure. Because this contingency has not occurred, Petitioner's contentions with regard to Hohnstein combined with Phillips do not arise, and therefore we do not address them.

(8) "and the second transceiver receives a second signal from the first computing device, the second signal intended for the base station"

Petitioner asserts a skilled artisan would have understood, with regard to Hohnstein's disclosure that access data terminal 566 (asserted second signal) receives data packets (asserted second signal) from subscriber unit 26 (asserted first computing device), that the packets are intended for distribution point 40 (asserted base station). Petitioner relies on disclosure that the packets are transmitted to (and therefore intended for) distribution point 40 so that base station 40 can determine a destination for the packet. Pet. 41–42 (citing Ex. 1002, Fig. 1, 2:55–59, 4:17–19, 6:34–43, 16:8–10, 16:14–15; Ex. 1008 ¶¶ 121–122).

We find, on the basis of the evidence and explanation provided by Petitioner, that Hohnstein discloses "the second transceiver receives a second signal from the first computing device, the second signal intended for the base station."

(9) "and the first transceiver transmits the second signal to the base station"

Petitioner asserts Hohnstein discloses the first transceiver sending the second signal to the base station for the reasons discussed with regard to the limitation discussed immediately above. Pet. 42; *see also supra* § II.E.3.a.(8). Petitioner argues a skilled artisan would have understood backhaul data terminal 554 (asserted first transceiver) transmits the second signal to distribution point 40 (asserted base station) because Hohnstein discloses the signal, when received by access antenna 570 from a subscriber unit, is converted from digital baseband format to broadband format by

backhaul terminal 554 prior to transmission to distribution point 40. Pet. 40 (citing Ex. 1002, 2:55–59, 16:8–15; Ex. 1008 ¶ 123).

We find, on the basis of the evidence and explanation provided by Petitioner, that Hohnstein discloses "the first transceiver transmits the second signal to the base station."

(10) Conclusion

For the foregoing reasons, Petitioner has established by a preponderance of the evidence that claim 1 of the '555 patent is unpatentable as obvious over Hohnstein and Phillips.

b. Claims 2–20

As noted above, Petitioner asserts claims 2–20 are unpatentable as obvious over Hohnstein and Phillips. Pet. 43–55. Petitioner only argues Phillips as part of a contingent argument with regard to a limitation of claim 1, and does not otherwise provide arguments based on Phillips. *Id.* at 32–41. Patent Owner does not provide arguments for claims 2–20 in addition to those made with regard to claim 1.

Claim 2 recites "[t]he wireless communication device of claim 1, wherein the second transceiver is removably coupled to the first transceiver." Petitioner relies on Hohnstein's disclosure that access data terminal 566 (asserted second transceiver) is coupled to backhaul data terminal 554 (asserted first transceiver) via junction box 562 using access cable 568. Pet. 43 (citing Ex. 1002, 15:25–26, 15:31–32). We credit Dr. Kotzin's testimony that one of ordinary skill in the art would have understood the coupling is removable by disconnecting access cable 568 coupling terminal 566 and junction box 562. We determine Petitioner has

shown terminal 566 is removably coupled to terminal 544. *Id.* (citing Ex. 1008 ¶ 125).

Claim 3 recites "[t]he wireless communication device of claim 2, further comprising an antenna, wherein the second transceiver is removably coupled to the antenna." For an "antenna" Petitioner relies on Hohnstein's disclosure of, *inter alia*, omnidirectional access antenna 574. Pet. 43 (Ex. 1002, 15:31–33). For the recitation that the second transceiver is coupled to the antenna, Petitioner relies on disclosure that data access terminal 566 (asserted second transceiver) is connected to antenna 574 via cabling. *Id.* (citing Ex. 1002, 15:38–40, 15:44–45). We credit Dr. Kotzin's testimony that a person of ordinary skill in the art would have understood one could have removed the coupling by removing the cabling connecting terminal 566 and antenna 574. We determine Petitioner has shown terminal 566 is removably coupled to antenna 574. *Id.* at 44 (citing Ex. 1008 ¶ 127).

Claim 4 recites "[t]he wireless communications device of claim 1, wherein the wireless communication device is a fixed-site subscriber station." We credit Petitioner's argument and Dr. Kotzin's testimony that Hohnstein's antenna module 502 (asserted wireless communication device) is a fixed-site subscriber station based on disclosure that module 502 is fixed and mounted to vertical pole 504, and subscribes to base station 40 which it serves. *Id.* (citing Ex. 1002, 5:42–47; Ex. 1008 ¶ 128).

Claim 5 recites "[t]he wireless communications device of claim 1, wherein the wireless communication device is mounted on the outside of a building and at least some of the plurality of computing devices are located inside the building." Petitioner relies on Hohnstein's disclosure of antenna

module 502 (asserted wireless communication device) mounted on vertical pole 504, and argues a skilled artisan would have understood antenna module 502 also could have been mounted on the outside of a building and at least some of the plurality of subscriber units could have been located inside the building. *Id.* at 44–45 (citing Ex. 1002, 13:45–46; Ex. 1008 ¶ 129). We credit Dr. Kotzin's testimony that subscriber units 26 (asserted computing devices) located within coverage area 24 (asserted coverage area of the second transceiver) could be located inside a building. *Id.* at 45 (citing Ex. 1002, 4:17–19, 4:24–28, Fig. 1; Ex. 1008 ¶¶ 130–131). We determine Petitioner has shown Hohnstein discloses this claim limitation.

Claim 6 recites "[t]he wireless communications device of claim 1, further comprising an AC power supply and a battery power supply." For an AC power source Petitioner relies on Hohnstein's disclosure of AC power source 530 used to power light system 508 and antenna module 502. Pet. 45–46 (citing Ex. 1002, 14:25–27, 14:31–35). For a battery power supply, Petitioner relies on power box 518 connected to antenna module 502, which functions as an uninterruptible power supply to antenna module 502 using charge/discharge circuit 520 and electrical storage device 522. *Id.* at 45 (citing 14:1–2, 14:11–15). Petitioner has shown AC power source 530 is an AC power supply and that power box 518 discloses a battery power supply.

Claim 7 recites "[t]he wireless communications device of claim 6, further comprising a battery monitor operable to detect error conditions in one of the AC power supply and the battery power supply and transmit an alarm signal to the base station via the first transceiver." We are persuaded a skilled artisan would have understood Hohnstein includes the recited

limitation based on Hohnstein's disclosure of determining (*e.g.*, detecting) whether light systems 508 meet power requirements of antenna module 502 (*e.g.*, whether there is an error). Pet. 46–47 (citing Ex. 1002, 14:3–7; Ex. 1008 ¶ 135). Petitioner argues that if such an error were detected, it would have been obvious for backhaul data terminal 544 to alarm base station 40 in order to alert access point 20 that it would no longer service subscriber units in its coverage area. *Id.* at 47 (citing Ex. 1008 ¶ 135). We find it credible that it would have been obvious to send a notification to alert the base station if service would no longer be provided. We determine Petitioner has shown Hohnstein discloses this claim limitation.

Claim 8 recites "[t]he wireless communications device of claim 1, wherein the first transceiver is further operable to communicate via wirelines with one of a telephone and a personal computer." We determine Petitioner has shown Hohnstein discloses this limitation based on disclosure that packets sent from backhaul data terminal 554 (asserted first transceiver) could be forwarded from distribution point 40 (asserted base station) to terminal network controller 30 over coaxial cable or twisted pair cable (asserted wirelines) to voice equipment 32 and computing equipment 34 (asserted one of telephone and a personal computer). *Id.* at 47–48 (citing Ex. 1002, 2:57–59, 4:47–49, 4:59–67, 6:38–43, 16:18–10; Ex. 1008 ¶ 139).

Claim 9 recites "[t]he wireless communications device of claim 1, wherein the first signal comprises data traffic from the Internet." We credit Petitioner's argument and Dr. Kotzin's testimony that the first signal sent by distribution point 40 (asserted base station), asserted by Petitioner in Sections VII.A.3.b and VII.A.3.f of the Petition to send the first signal, could have comprised data traffic from the Internet because Hohnstein discloses

distribution point 40 includes a back end communication interface for connecting to the Internet and therefore can send and receive information from the Internet. Pet. 49 (citing Ex. 1002, 4:47–49, 6:38–43, 8:49-54; Ex. 1008 ¶ 140). We determine Petitioner has shown Hohnstein discloses this claim limitation

Claim 10 recites "[t]he wireless communications device of claim 1, wherein the second signal comprises data traffic to be sent to the Internet." We determine Petitioner has shown Hohnstein discloses this limitation based on disclosure that distribution point 40 can determine that an information packet is destined for the Internet and transmit the packet via gateway 50 to the Internet. Pet. 49–50 (citing Ex. 1002, 2:55–59, 4:17–19, 6:55–61, 16:8–10, 16:14–15, Fig. 1; Ex. 1008 ¶ 141).

Independent claim 11 is substantially similar to independent claim 1. For claim 11, Petitioner refers to relevant evidence and argument provided with regard to claim 1. Pet. 50–53. We discuss the following portions of claim 11 that differ from claim 1. The preamble of claim 11 recites "[a] wireless communication system," for which Petitioner relies on Hohnstein's disclosure of wireless communication system 20. *Id.* at 50 (citing Ex. 2:14–15). For the limitation "wherein the first wireless communication device is one of the plurality of wireless communication devices," as recited in claim 11, Petitioner relies on disclosure that distribution point 40 is in direct communication with at least two access points (asserted plurality of wireless communication devices), and argues the access point with which distribution point 40 communicates is one of a plurality of wireless communication devices. *Id.* at 51–52 (citing Ex. 1008 ¶¶ 148–149). For the limitation "and in response [to the second transceiver receiving a second signal] the first

transceiver transmits the second signal to the base station," as recited in claim 11, we are persuaded by Petitioner's argument that the sending of the second signal to the base station is *in response* to the second transceiver receiving a second signal from the first computing device intended for the base station based on disclosure that information packets (asserted signal) received by data access terminal 566 (asserted second transceiver) are converted from digital baseband format to broadband format and transmitted to distribution point 40. *Id.* at 53 (citing Ex. 1002, 2:55–59, 16:8–10, 16:14–15; Ex. 1008 ¶ 188).

Claims 12–20 depend either directly or indirectly from claim 11, and are similar to claims 2–10 which depend from claim 1. For example, claims 2 and 12 each recite "wherein the second transceiver is removably coupled to the first transceiver." For claims 12–20, Petitioner relies on its respective arguments for claims 2–10. Pet. 54–55. For reasons discussed with regard to claims 2–10, Petitioner has made a sufficient showing for claims 12–20.

We find, on the basis of the evidence and explanation provided by Petitioner, that Hohnstein discloses the limitations of claims 2–20.

For the foregoing reasons, we are persuaded Petitioner has established by a preponderance of the evidence that claims 2–20 of the '555 patent are unpatentable as obvious over Hohnstein and Phillips.

G. Asserted Obviousness of Claims 1–20 Over Hohnstein and Agrwawal

Petitioner contends claims 1–20 of the '555 patent are unpatentable under 35 U.S.C. § 103(a) over Hohnstein and Agrawal. Pet. 56–71. Petitioner's contentions are the same as those presented in asserting

obviousness over Hohnstein and Phillips, except Agrawal, like Phillips, is relied on in the contingency that Patent Owner argues Hohnstein does not disclose "access terminal 566 (the identified second transceiver) determines signal characteristics of a computing device and transmits a signal to the computing device based on the determined signal characteristics." Pet. 58–65. This contingency has not occurred—Patent Owner does not argue Hohnstein fails to make such disclosure. Because this contingency has not occurred, Petitioner's contentions with regard to Hohnstein combined with Agrawal do not arise, and therefore we do not address them.

III. CONCLUSION

Based on all the evidence of record, we determine Petitioner has established by a preponderance of the evidence that claims 1–20 are unpatentable under 35 U.S.C. § 103(a) as obvious over Hohnstein and Phillips.

IV. ORDER

For the reasons given, it is

ORDERED that claims 1–20 of the '555 patent are unpatentable; and

FURTHER ORDERED that parties to the proceeding seeking judicial review of this Final Written Decision must comply with the notice and service requirements of 37 C.F.R. § 90.2.

UNITED STATES PATENT AND TRADEMARK OFFICE

BEFORE THE PATENT TRIAL AND APPEAL BOARD

UNIFIED PATENTS INC.,
Petitioner,

v.

GENERAL ACCESS SOLUTIONS, LTD.,
Patent Owner.

Case IPR2017-01178
Patent 9,225,555 B2

Before KEN B. BARRETT, JEFFREY A. STEPHENS, and CHRISTA P. ZADO, *Administrative Patent Judges*.

STEPHENS, *Administrative Patent Judge*, dissenting.

I respectfully dissent from my colleagues' determination that Petitioner has shown the challenged claims of the '555 patent are unpatentable. In my view, the majority decision is based on an unreasonably broad interpretation of "wireless local area network transceiver" (hereinafter also referred to as "WLAN transceiver" or "wireless LAN transceiver"), as recited in claims 1 and 11. The majority decision's construction is broader than that urged by either party, and is not consistent with the context of the claims, the teachings of the '555 patent, or uncontroverted extrinsic evidence presented by the Patent Owner in this case. The Petitioner's case is also premised on an unreasonably broad construction of WLAN transceiver, and

lacks evidence that Hohnstein teaches a WLAN transceiver under a proper construction. For these reasons, Petitioner has not shown unpatentability of the challenged claims.

I. ANALYSIS

A. Construction of "wireless local area network transceiver"

Based on the '555 patent and extrinsic evidence, as explained below, the term "wireless local area network transceiver" in the context of claims 1 and 11 should be interpreted to mean "a transceiver that forms a wireless local area network (wireless LAN) with the plurality of computing devices and facilitates communications with those devices, including communications within the network."[9] Furthermore, a wireless LAN is limited in geographic area compared to a wide area network, and typically complies with the IEEE 802.11 standard.

Patent Owner argues that "wireless local area network transceiver," as recited in claims 1 and 11, should be interpreted to mean "a transceiver that provides direct wireless connectivity between multiple computing devices within a limited geographic area." PO Resp. 16–23. Petitioner argues Patent Owner's construction is unreasonable, and contends the claimed "wireless local area network transceiver" should be construed to mean "a transceiver that forms part of a local network and facilitates communications

[9] Although "the second wireless local area network transceiver" recited in claim 11 lacks explicit antecedent basis, there is no dispute among the parties that claim 11 requires a "wireless local area network transceiver," and there is no argument that this term should be construed differently in claim 11 than in claim 1. Claim 1 is treated as representative for purposes of claim construction.

with devices in the network." Reply 2–12. The majority interprets the claimed WLAN transceiver as "a transceiver that transmits and receives wireless signals and defines a coverage area that is relatively small or geographically limited," and "further determine[s] that the coverage area may be a 'cell.'" Maj. Op. 13–14.

a. The '555 patent

The overall purpose of the '555 patent is to provide a way to allow communication between two different communication networks, such as between (1) a wireless broadband communication system formed from fixed-site base stations and fixed-site subscriber stations, and (2) a wireless local area network (WLAN) formed with access points and mobile stations. The fundamental point sidestepped by Petitioner and the majority is that each of these communication systems existed independently and provided for communication among devices located within their respective networks. There is no indication that in facilitating communication from one network to the other, which is the focus of the '555 patent, their identities as separate networks would be lost. A defining characteristic of a network is the ability for devices within it to communicate with each other *within the network*. Thus, although not expressly recited in claim 1 separate from the WLAN transceiver or emphasized in the described embodiments, one of ordinary skill in the art would have understood that claim 1 requires a WLAN that provides for communication within that network. Relatedly, the '555 patent and extrinsic evidence establish that the geographic area covered by the WLAN transceiver is small *relative to a wide area network*, which is a separate network to which the WLAN may be connected (e.g., the wireless

network with fixed-site base stations and fixed-site subscriber stations described in the ’555 patent).

As background, the ’555 patent explains that “[a]dvancements in communication technologies have permitted the development, and implementation, of new types of communication systems.” Ex. 1001, col. 3, ll. 62–64. One example is a radio communication system that has radio links between fixed-site subscriber stations and fixed-site base stations. *Id.* at col. 4, ll. 36–57.

The patent explains that other types of existing radio communication systems include “[w]ireless communication systems, sometimes referred to as micro-cellular networks, private networks, and WLANs (wireless local area networks).” *Id.* at col. 4, ll. 58–62. Thus, the ’555 patent indicates that the term “wireless local area network” was *known in the art*.

WLANs, along with micro-cellular networks and private networks, “provide for radio communications with mobile stations positioned within communication range of such networks.” *Id.* at col. 4, ll. 63–65. Characteristics of such networks are further described:

> Generally, the *communication ranges* of the mobile stations operable in such systems is relatively small as relatively low-power signals are originated at the mobile stations and, correspondingly, originated at the network infrastructure of such systems to be terminated at the mobile stations. The network infrastructure of such systems typically include *fixed-location transceivers, sometimes referred to as access points*. The *access points are capable of communicating with a group of mobile stations* positioned within a micro-cellular, or other, area defined by the access point. In some of such systems, the access points are coupled to a conventional, local area network, also used to interconnect the processing

> stations of an office computer system. In other such systems, the access points are connected in other manners.

Id. at col. 4, l. 66–col. 5, l. 12 (emphasis added). The ’555 patent thus indicates that a WLAN is a known type of network that uses relatively low-power signals to communicate over a relatively small area, typically using mobile stations in communication with a fixed-location transceiver (sometimes referred to as an access point) that forms the infrastructure of the network.

The ’555 patent refers to the existing radio communication systems as “wireless broadband communication systems,” and notes that installation of such systems “to provide broadband services with a plurality of subscriber stations provides a radio infrastructure throughout a geographical area throughout which wireless broadband communication services are effectual.” *Id.* at col. 5, ll. 13–17. The purpose of the ’555 patent’s disclosure is described as “to *utilize the communication capabilities of a wireless broadband communication system* to provide *additional communication services*.” *Id.* at col. 5, ll. 18–20 (emphasis added).

To this end, the ’555 patent describes “a wireless communication device in wireless communication with a base station and mobile stations.” *Id.* at col. 5, ll. 30–32. “The wireless communication device includes first and second transceivers coupled to each other.” *Id.* at col. 5, ll. 32–33. The first transceiver communicates with the base station, and the second transceiver is in wireless communication with the mobile stations. *Id.* at col. 5, ll. 33–38. Because the two transceivers are coupled to each other, signals may be sent from a base station to a mobile station or from a mobile station to the base station through the wireless communication device. *See id.* at

col. 5, ll. 39–45. In this way, the wireless communication device described in the ’555 patent can couple together the two types of networks described in the background: (1) the wireless broadband communication system formed from fixed-site subscriber stations and fixed-site base stations, *id.* at col. 4, ll. 36–57, and (2) wireless communication systems with mobile stations and access points, such as a wireless local area network, *id.* at col. 4, l. 58–col. 5, l. 12. Patent Owner’s expert opines that a person of ordinary skill in the art “would understand the system disclosed and claimed in the ‘555 patent to be a ‘two-layered’ communication system” because of the two different networks involved. Ex. 2007, ¶ 15.

In one embodiment described in the ’555 patent, shown in Figure 2, the wireless communication device that connects these two networks is formed from integrated access device (IAD) 224 coupled with a WLAN transceiver. *See* Ex. 1001, col. 7, ll. 42–49, col. 8, ll. 4–40. Figure 2 of the ’555 patent (annotated by Petitioner) is reproduced below:

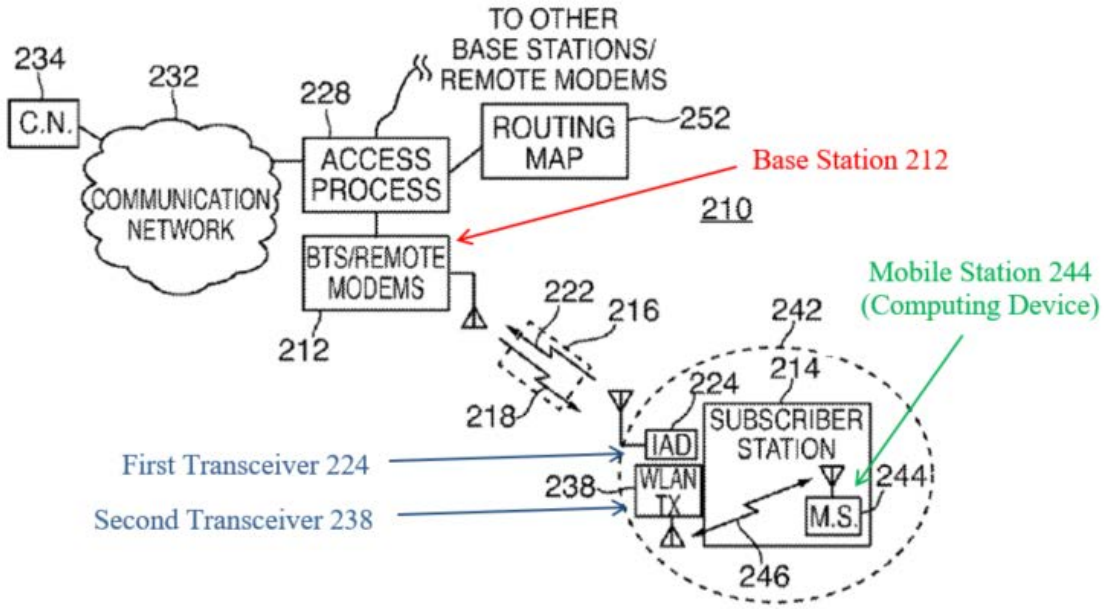

FIG. 2

Pet. 8; *see* Ex. 1001, Fig. 2. Figure 2 illustrates the wireless communication system implemented in a fixed wireless access communication system. Ex. 1001, col. 6, ll. 25–27. Base station 212 communicates with the transceiver of the integrated access device 224 located at subscriber station 214. *Id.* at col. 7, ll. 35–49. Base station 212 is coupled to access process 228, which controls operations of the communication system and is coupled to a communication network such as a public-switched telephone network or a packet data network. *Id.* at col. 7, ll. 56–62. In Figure 2, "a WLAN (wireless local area network) transceiver 238 is positioned at subscriber station 214 at the integrated access device 224 to be connected to the transceiver circuitry of the integrated access device." *Id.* at col. 8, ll. 4–8. Mobile station 244 within the cell defined by WLAN transceiver 238 forms a radio link with the WLAN transceiver. *Id.* at col. 8, ll. 8–18. "Because of the connection of the WLAN transceiver to the transceiver of the integrated access device 224, signals originated at the mobile station and communicated to the WLAN transceiver can, in turn, be provided to the transceiver of the integrated access device" to be communicated to another device through the base station. *Id.* at col. 8, ll. 19–26, col. 7, l. 62–col. 8, l. 3. Analogously, signals can be communicated to the mobile station from the base station through the integrated access device and WLAN transceiver. *See id.* at col. 8, ll. 26–29.

Integrated access device 310 is described in connection with Figure 3 of the '555 patent, which is implemented in subscriber premises 121 shown in Figure 1. *Id.* at col. 8, ll. 41–67. "Subscriber premises 121-123 may comprise many different types of residential and commercial buildings, including single family homes, multi-tenant offices, small business

enterprises (SBE), medium business enterprises (MBE), and so-called 'SOHO' (small office/home office) premises." *Id.* at col. 6, ll. 58–63. "Subscriber IAD 310 is connected to one or more communication devices in subscriber premises 121 via network termination (NT) 320 or (optionally) via a wireless local area network (LAN) connection." *Id.* at col. 8, ll. 44–47; *see also id.* at col. 9, ll. 45–55 (describing how subscriber IAD 310 is connected directly to some subscriber premises equipment, such as personal computers (PCs) and telephones, and "may also communicate wirelessly with some subscriber premises equipment, such as PC 334, via a wireless LAN connection").

In summary, the '555 patent describes an integrated device attached to a residential or commercial building (subscriber station) that connects communication devices on the premises with a nearby base station. The integrated device may be connected with the network termination of the building to allow communication from wired devices within the building to a base station via a first transceiver. The integrated device may also have a second transceiver that forms a WLAN connection with a mobile station and allows communication between the mobile station and the base station via the first transceiver. By adding a WLAN transceiver to a subscriber station in a fixed wireless communication system according to the '555 patent, "WLAN service is provided in a fixed wireless access in a communication system." *Id.* at col. 12, ll. 39–40. "*A mobile station operable in a wireless local area network* is thereby able to communicate in the WLAN coverage area encompassing the subscriber station at which the local-network radio transceiver is positioned." *Id.* at col. 12, ll. 40–44 (emphasis added).

The written description of the ’555 patent provides a few other clues as to the scope of the term “wireless local area network transceiver.” First, the patent indicates that one of ordinary skill in the art would have appreciated that a wide area network (“WAN”) and a local area network (“LAN”) were different networks. *Id.* at col. 6, l. 67–col. 7, l. 4. (“External network 150 may be, for example, . . . one or more data networks, including the Internet or proprietary Internet protocol (IP) wide area networks (WANs) and local area networks (LANs).”).

Second, specifically regarding the term “WLAN transceiver,” the ’555 patent describes its function in the context of the invention. *See id.* at col. 8, ll. 4–31. For example, the patent notes that “[t]he WLAN transceiver defines a coverage area 242 defining a cell.” *Id.* at col. 8, ll. 8–9. This statement is descriptive, rather than definitional, as it would apply to virtually any transceiver and does not aid in identifying specific characteristics of a WLAN transceiver. The ’555 patent describes communication of signals from a mobile station to the WLAN transceiver and vice versa. *Id.* at col. 8, ll. 8–31. Again, however, this description relates to what the WLAN transceiver accomplishes in the context of the invention, and does not define the scope of the term.

Third, the ’555 patent uses the term “wireless local area network (LAN) connection” to refer to the connection between the WLAN transceiver and a mobile station. For example, as noted above, the patent states that “[s]ubscriber IAD 310 is connected to one or more communication devices in subscriber premises 121 via network termination (NT) 320 or (optionally) *via a wireless local area network (LAN) connection*.” *Id.* at col. 8, ll. 44–47 (emphasis added); *see also id.* at col. 9,

ll. 45–55 (describing how subscriber IAD 310 is connected directly to some subscriber premises equipment, such as personal computers (PCs) and telephones, and "may also communicate wirelessly with some subscriber premises equipment, such as PC 334, *via a wireless LAN connection*" (emphasis added)). As with the modifier "WLAN" before transceiver, "wireless local area network (LAN) connection" indicates that a WLAN transceiver forms a particular type of connection with a mobile station, without explaining its particular characteristics or delineating the scope of the term.

In claim 1, the "second wireless local area network transceiver" is "in direct wireless broadband communication with a plurality of computing devices located within a coverage area of the second transceiver," is coupled to the first transceiver, determines signal characteristics of a first computing device of the plurality, and transmits and receives signals/communications to and from the first computing device. Considering the function of the wireless local area network transceiver in the claim and as described in the above-recited passages from the written description, it is evident that the connections between the claimed wireless local area network transceiver and the plurality of computing devices are wireless LAN connections, resulting in the formation of a wireless local area network that allows communication with the devices in the network through the transceiver. Petitioner's proposed claim construction similarly posits that a WLAN transceiver "forms part of a local network and facilitates communications with devices in the network," Reply 5, except that Petitioner's proposed construction inexplicably refers to a "local network" rather than a "wireless local area network." Based on the language of claim 1 and the '555 patent's written

description, one of skill in the art would understand the term "wireless local area network transceiver" in the context of claim 1 to mean "a transceiver that forms a wireless local area network (wireless LAN) with the plurality of computing devices and facilitates communications with those devices."[10] Considering the issues arising in this case, where one network is connected to another, it is worth emphasizing that the wireless LAN transceiver would be understood to be able to facilitate communications within the network, i.e., within the WLAN without accessing a wide area network, because that is what makes the WLAN its own "network." As discussed above, the '555 patent also indicates that a WLAN is limited in geographic area, presumably relative to a wide area network. I next consider further construction of the term "wireless local area network" based on extrinsic evidence presented by Patent Owner as to how one of ordinary skill in the art would have understood this term, which the '555 patent indicates is known in the art.

b. Technical dictionaries

Patent Owner contends that "multiple 1990's dictionaries of computing terms recognized that the term 'local area network' had a particular meaning to those of ordinary skill in the art." PO Resp. 18. Patent Owner argues that each definition "recognized that the network is necessarily limited in geographic area" and that the definitions also show

[10] The prosecution history of the parent application referred to by Patent Owner does not provide any additional detail as to the scope of the term "wireless local area network transceiver," but is consistent with Patent Owner's implicit argument that the term is narrower than the term "transceiver" alone. *See* PO Resp. 17; Ex. 1013, 2 (Amendment filed April 13, 2011, in U.S. Patent Application No. 11/982,458).

that those of ordinary skill in the art understood the term LAN "meant the computing devices on the network could communicate with each other." *Id.* at 18–19. Patent Owner's declarant, Mr. Paul Struhsaker,[11] provides a table comparing the definitions for LAN and WAN in each of these dictionaries, as reproduced below.

[11] Mr. Struhsaker is the named inventor on the '555 patent, but attests that he has no interest or ownership in the patent or in the Patent Owner, and is being compensated on an hourly basis. Ex. 2007, ¶ 13 (Supplemental Declaration of Paul Struhsaker in Support of Patent Owner's Response ("Supplemental Struhsaker Declaration")). Mr. Struhsaker's qualifications and experience in the art are set forth in paragraphs 5 through 11 of his Supplemental Declaration, and Petitioner does not challenge his qualification to opine on the matters presented in the Declaration.

EX	Treatise	Year	Local Area Network	Wide Area Network
2008	IBM Dictionary of Computing	1994	A computer network located on a user's premises within a limited geographical area.	A network that provides communication services to a geographic area larger than that served by a local area network or a metropolitan area network, and that may use or provide public communication facilities.
2009	Microsoft Press Computer Dictionary	1997	A group of computers and other devices dispersed over a relatively limited area and connected by a communications link **that enables any device to interact with any other on the network.**	A communications network that connects geographically separated areas.
2010	Novell's Dictionary of Networking	1997	A system in which personal computers and electronic office equipment are linked together (usually with a wiring-based cabling scheme) within a small area **to form a network. Users can then communicate with each other, share resources (such as data storage and printers)**, and access remote computers or other networks.	A network encompassing a large geographical area (such as across a city or around the world). Local area networks (LANs) connect to WANs by linking with a mainframe computer, a public data network, or another LAN.

Ex. 2007, 8–9. The table in Mr. Struhsaker's declaration lists definitions of LAN and WAN from the *IBM Dictionary of Computing* (10th ed. 1993),[12] *Microsoft Press Computer Dictionary* (3d ed. 1997),[13] and *Novell's Dictionary of Networking* (1997).[14]

Petitioner argues Patent Owner's use of extrinsic evidence "is improper because any claim term that lacks a definition in the intrinsic record is given a broad reasonable interpretation," citing for support *In re ICON Health & Fitness, Inc.*, 496 F.3d 1374, 1379 (Fed. Cir. 2007). Reply 8. Petitioner also contends "[t]he handpicked dictionary definitions should . . . be given no weight at least because they are selectively directed to details that Patent Owner hopes to impart into the claims." Reply 11. "If Patentee envisioned these details as being part of the invention," Petitioner continues, "they should have been included in the '555 patent's disclosure." *Id.* Petitioner further argues that each of the dictionary definitions lacks some elements found in Patent Owner's proposed construction. *Id.* at 11–12.

Petitioner's reading of *Icon Health* to suggest that use of extrinsic evidence is improper where the specification lacks a definition of a term is unsupported. *Icon Health* does not discuss the use of extrinsic evidence in determining the broadest reasonable construction. The Federal Circuit explains in *Icon Health* that "we look to the specification to see if it provides a definition for claim terms, but otherwise apply a broad interpretation."

---

[12] Ex. 2008.

[13] Ex. 2009.

[14] Ex. 2010.

496 F.3d at 1379. This statement means that, even when applying the broadest reasonable interpretation standard, we should not ignore a definition in the specification that is narrower than the ordinary meaning of a term. Following Petitioner's logic, the Board or a court could only rely on extrinsic evidence as to the meaning of a term if the specification provided a definition for that term, but this would not make sense because in such cases extrinsic evidence is not likely to be helpful. Petitioner does not cite persuasive authority indicating that extrinsic evidence such as dictionaries may not be used when construing claims according to the broadest reasonable standard.

"[T]he words of a claim 'are generally given their ordinary and customary meaning.'" *In re Translogic Tech., Inc.*, 504 F.3d 1249, 1257 (Fed. Cir. 2007) (quoting *Phillips v. AWH Corp.*, 415 F.3d 1303, 1312 (Fed. Cir. 2005) (en banc)). "The ordinary and customary meaning 'is the meaning that the term would have to a person of ordinary skill in the art in question.'" *Id.* (quoting *Phillips*, 415 F.3d at 1313). "Dictionaries or comparable sources are often useful to assist in understanding the commonly understood meaning of words and have been used both by [the Federal Circuit] and the Supreme Court in claim interpretation." *Phillips*, 415 F.3d at 1322.

Petitioner's objection to the dictionary definitions as being "handpicked" and "selectively directed" to the Patent Owner's proposed construction, Reply 11, is not persuasive in light of the Federal Circuit's observation that "[a] dictionary definition has the value of being an unbiased source 'accessible to the public in advance of litigation,'" *Phillips*, 415 F.3d at 1322 (quoting *Vitrionics Corp. v. Conceptronic, Inc.*, 90 F.3d 1576, 1585

(Fed. Cir. 1996)). The court has made clear that "judges . . . 'may . . . rely on dictionary definitions when construing claim terms, so long as the dictionary definition does not contradict any definition found in or ascertained by a reading of the patent documents.'" *Id.* at 1322–23 (quoting *Vitrionics*, 90 F.3d at 1584 n.6). In addition, as to Petitioner's argument that the patentee was obligated to include operational details of a wireless local area network transceiver in the disclosure of the '555 patent, Reply 11, "a patent need not teach, and preferably omits, what is well known in the art," *Hybritech Inc. v. Monoclonal Antibodies, Inc.*, 802 F.2d 1367 (Fed. Cir. 1986).

Here, the dictionary definitions relied on by Patent Owner and Mr. Struhsaker do not contradict any definition found in or ascertained by a reading of the intrinsic record of the '555 patent, and Petitioner makes no allegation to the contrary.

(1) Limited geographic area

Each dictionary definition reinforces Patent Owner's argument that a local area network is limited in geographic area as compared to a wide area network. PO Resp. 18. The *IBM Dictionary of Computing*, for example, provides that a LAN is "located on a user's premises within a limited geographical area," and the same dictionary specifically contrasts a LAN with a WAN in defining the latter as "[a] network that provides communication services to a geographic area larger than that served by a local area network or a metropolitan area network, and that may use or provide public communication facilities." Ex. 2008, 392, 744. The *Microsoft Press Computer Dictionary* includes the same concept of "devices dispersed over a relatively limited area" in the case of a LAN, and defines a

WAN as "[a] communications network that connects geographically separated areas." Ex. 2009, 276, 507. Finally, *Novell's Dictionary of Networking* specifies that a LAN is "[a] system in which personal computers and electronic office equipment are linked together . . . within a small area," as contrasted with the definition of WAN as "[a] network encompassing a large geographical area (such as across a city or around the world)." Ex. 2010, 331, 622.

Each of the definitions is consistent with the '555 patent's statement regarding WLANs that "the communication ranges of the mobile stations operable in such systems is relatively small as relatively low-power signals are originated at the mobile stations and, correspondingly, originated at the network infrastructure of such systems to be terminated at the mobile stations." Ex. 1001, col. 4, l. 66–col. 5, l. 3. And although the definitions do not provide per se rules about how big or small an area must be to be considered a wide area network or local area network, the existence of these definitions and their general guidelines indicate that both terms would have been known to and understood by one of skill in the art. Accordingly, the dictionaries establish that a wireless local area network, as distinguished from a wide area network, is limited in geographic area.

Petitioner does not specifically challenge the "limited geographic area" aspect of Patent Owner's proposed construction, *see* Reply 3–18, except to argue that it is unclear "whether the limited geographic area' of the proposed construction is separate from, or part of, the 'coverage area of the second transceiver' as recited in claim 1, *id.* at 15. *See also* Reply 19 (arguing "Hohnstein's '***local*** radio access point' transceiver provides coverage area for a local area network that is limited in geographical

scope"). The coverage area of a particular transceiver is not necessarily coextensive with the limited geographic area of a WLAN, at least because there may be more than one access point. Nevertheless, logically, the coverage area of any particular transceiver in a WLAN must necessarily be limited in geographic area if the overall coverage area of the WLAN is limited. It is not necessary to resolve this issue, as there is no indication it would impact this proceeding.

(2) Communication within the network

The dictionary definitions also support Patent Owner's contention that the devices within a wireless LAN must be able to communicate with one another within the network, "without accessing the wide area cellular network or the internet." PO Resp. 20–21.

As noted previously, the *IBM Dictionary of Computing* defines a LAN as "[a] computer network located on a user's premises within a limited geographical area." Ex. 2008, 392. In other words, the entire network is located within this area. The *IBM Dictionary* definition further notes that "[c]ommunication within a local area network is not subject to external regulations; however, communication across the LAN boundary may be subject to some form of regulation." *Id.* This statement reinforces the understanding that a network of computers is understood to provide the ability to communicate within that network, and also provides additional criteria one of skill in the art may use to determine whether a network is a wide area network or local area network. The *Microsoft Press Computer Dictionary* explicitly states that the devices within the limited area of a LAN are "connected by a communications link that enables any device to interact with any other on the network." Ex. 2009, 276. Again, without any mention

of any other network, one of skill in the art would have understood that, not only are the devices in the network, but the communications between them are "on the network." *Novell's Dictionary of Networking* similarly expresses the function of the network formed by devices linked together within a small area, stating that "[u]sers can then communicate with each other, share resources (such as data storage and printers), and access remote computers or other networks." Ex. 2010, 331. This definition explicitly mentions the possibility that devices within the LAN may access other networks, reinforcing the understanding that the presence of the LAN alone is sufficient to provide the ability of the devices to communicate with each other on the network.

Petitioner's arguments do not persuasively address whether one of ordinary skill in the art would have understood a wireless local area network to facilitate communication within that network. Petitioner contends "the '555 patent's specification does not disclose that its computing devices have direct, or even indirect, wireless connectivity between each other." Reply 3 (citing Ex. 1020 ¶ 3). Although this may be true as to the passages and figures discussed by Petitioner, *see* Reply 3–7, the introduction of the term WLAN in the background discusses communication between the devices within the network, as discussed *supra*, *see* Ex. 1001, col. 4, l. 58–col. 5, l. 17. The absence of detail as to known capabilities of a wireless LAN transceiver in the description that follows does not indicate the wireless LAN transceiver would not perform these established functions. This is particularly so given the dictionary definitions' reinforcement of the understanding presented in the background of the '555 patent.

As to the dictionary definitions, Petitioner argues that the *IBM Dictionary of Computing* and *Microsoft Press Computer Dictionary* do not discuss direct connections or direct communication. Reply 11–12 (citing Ex. 1020 ¶ 12). As discussed *supra*, however, both dictionaries indicate that devices on the network communicate with each other on the network. And Petitioner's point that the *Microsoft* dictionary definition "does not even contemplate wireless communication" pertains only to the definition of "local area network," but one of skill in the art would understand that a wireless local area network is a LAN with wireless connections.

Petitioner also argues that "the '555 patent explicitly discloses that the wireless local area [network] transceiver may be used in a system with a single computing device," and, "therefore would not need to 'provide[] direct wireless connectivity between multiple devices.'" Reply 6–7 (alteration in original). Figure 3 of the '555 patent, for example, "shows the ability to use only a single wireless computing device 334" connected to the WLAN transceiver. *Id.* at 7; *see* Ex. 1001, Fig. 3. Consistent with this figure, the '555 patent's use of the term "wireless local area network (LAN) connection," Ex. 1001, col. 8, ll. 46–47, also indicates the connection between the wireless LAN transceiver and a single computing device forms a wireless LAN. This understanding is not, however, inconsistent with the concept that the devices within a wireless LAN must be able to communicate with one another within the network, i.e., without accessing the wide area cellular network or the internet. In other words, the WLAN transceiver facilitates (e.g., is configured to assist with, when requested)

such in-network communications when client devices are connected to it.[15] In addition, claim 1 requires the second wireless local area network transceiver to be "in direct wireless broadband communication with a plurality of computing devices," which means forming a wireless LAN. Because there is more than one device, the wireless LAN transceiver in claim 1 need not be construed in a way that preserves the possibility of forming a LAN with just one computing device connected to an access point.

For the reasons given, at the time of invention, one of skill in the art would have understood that the claimed WLAN transceiver facilitates communications within the network among the computing devices in the network that are connected to it.

c. The IEEE 802.11 standard

Patent Owner argues, based on Mr. Struhsaker's testimony, "that a POSITA at the time of . . . the invention of the '555 patent would have understood that a 'wireless local area network' meant a wireless network compliant with the IEEE 802.11 Wi-Fi industry standard, the accepted industry standard for wireless computer networks by 2001." PO Resp. 19 (citing Ex. 2007 ¶ 29). Patent Owner does not propose that a "wireless local area network transceiver" be construed to incorporate the entire standard, but argues two essential features of the standard are the limited geographic area of the network and in-network communication among devices in the

[15] This requirement does not preclude the transceiver from also facilitating communications between the devices in the network by accessing an external network such as the wide area cellular network or the internet.

network, i.e., without accessing the wide area cellular network or the internet. *Id.* at 20–21.

Mr. Struhsaker's testimony relies in part on his own experience, but also refers to the 802.11 wireless LAN Medium Access Control (MAC) and Physical Layer (PHY) Specifications[16] and articles describing the 802.11 standard.[17] *See* Ex. 2007 ¶¶ 26–50. "Currently," according to one article in the September 1997 issue of the IEEE Communications Magazine, "there are two emerging WLAN standards: the European Telecommunications Standards Institute (ETSI) High-Performance European Radio LAN (HIPERLAN) and the IEEE 802.11 WLAN." Ex. 2015, 117; *see* Ex. 2007 ¶ 27. Mr. Struhsaker testifies that "[b]y the time of the invention of the '555 patent, the IEEE 802.11 Wi-Fi standard was the accepted industry standard for wireless local area networks," and that for this reason "a POSITA at the time of the invention of the '555 patent would have understood that a 'wireless local area network' meant a wireless network compliant with the IEEE 802.11 Wi-Fi industry standard." Ex. 2007 ¶ 29.

Mr. Struhsaker notes that the opening paragraph of the 802.11 standard states that the scope of the standard is to develop a MAC and PHY specification "'for wireless connectivity for fixed, portable, and moving stations <u>within a local area</u>.'" *Id.* ¶ 34 (quoting Ex. 2011 ¶ 1.1). The "purpose" of the standard also refers to "local area communication." Ex. 2011 ¶ 1.2; *see* Ex. 2007 ¶ 34. Mr. Struhsaker explains that the 802.11 standard recognizes that it cannot accurately define the typical geographic

[16] Ex. 2011.

[17] Exs. 2012–2015.

size or area of a wireless LAN under the standard, but he estimates based on his experience, which includes helping to develop the standard, that "the maximum range of a wireless LAN router at the time of the invention of the '555 patent was less than 500 feet in a typical deployment, providing a coverage area with a diameter less than 1,000 feet." Ex. 2007 ¶¶ 35–36. Mr. Struhsaker notes that this estimate is consistent with published estimates by others in the field at the time. *See* Ex. 2007 ¶¶ 37–40. He also explains reasons why the geographic area of a wireless LAN under the 802.11 standard are intentionally limited, including because "FCC regulations limit transmitter power" for such systems. *Id.* ¶¶ 41–42.

Regarding communication within the network, Mr. Struhsaker explains that "the MAC layer of the IEEE 802.11 Wi-Fi standard provides for unique addresses to be assigned to computing devices on the network, and data protocols that allow frames or packets of data to reach specific computing devices on the network." *Id.* ¶ 45. He testifies that "[t]his protocol allows for devices to communicate with each other *on the network* and share network resources." *Id.* (emphasis added). Mr. Struhsaker concludes that "an essential component of the IEEE 802.11 wireless local area network was that individual computing devices could communicate with one another <u>within the network</u>." *Id.* ¶ 47.

Neither Petitioner nor its expert disputes Mr. Struhsaker's testimony that "[b]y the time of the invention of the '555 patent, the IEEE 802.11 Wi-Fi standard was the accepted industry standard for wireless local area networks." *Id.* ¶ 29. Petitioner argues, however, that "a POSA reading the '555 patent specification would not have read limitations from the documents cited by Patent Owner into the claims." Reply 9 (citing Ex.

1020, 9 (Second Declaration of Michael D. Kotzin, Ph. D.)). The explanation given by Petitioner and its expert, Dr. Kotzin, is that "[t]he '555 patent never refers to 802.11 or incorporates-by-reference any 802.11 specifications," further explaining that "[i]f the details of 802.11 were so integral to the claim terms, they would have been included in the patent's disclosure, or at least referenced." Reply 9–10 (citing Ex. 1020, ¶ 10).

Petitioner also argues it is "telling . . . that Mr. Struhsaker, the '555 patent's sole inventor and Patent Owner's declarant, did not disclose an 802.11 specification in an information disclosure statement during prosecution of the '555 patent" because "Patent Owner states 'Mr. Struhsaker served as Chairman of the IEEE 802.11 standards setting committee from 1993-1995.'" Reply 10 (quoting PO Resp. 8). Petitioner argues "[t]his further demonstrates that the Patentee did not consider details of 802.11 as necessary to the claims." *Id.*

Without rebuttal, Mr. Struhsaker's testimony that "[b]y the time of the invention of the '555 patent, the IEEE 802.11 Wi-Fi standard was the accepted industry standard for wireless local area networks" should be accepted. Ex. 2007 ¶ 29. Petitioner does not address how this fact would have figured into the understanding of one of ordinary skill in the art reading the term "wireless local area network transceiver" in the '555 patent, other than to state that, without reference to the 802.11 standard in the '555 patent, one of skill in the art would not have understood the claims to be "limited to transceivers that are compliant with and provide the specific functionality of 802.11." Reply 10. It is telling that Petitioner's declarant does not counter Mr. Struhsaker's testimony that by the time of the invention of the '555 patent, the IEEE 802.11 Wi-Fi standard was the accepted industry standard

for wireless local area networks. *See* Ex. 1020 ¶¶ 9–10. Instead, Dr. Kotzin determines that because the ’555 patent does not refer to or incorporate by reference the 802.11 standard, the claimed wireless LAN transceiver is not limited to one that is compliant with and provides the specific functionality of 802.11. Ex. 1020 ¶ 10. In this way, as with the dictionary definitions, Petitioner and its expert avoid the question of what the term “wireless local area network transceiver” ordinarily would have meant to one of skill in the art. But this analysis elevates how one of skill in the art would have applied the law of claim construction (from Petitioner’s perspective) over the question of what that term would have meant to one of skill in the art.

Based on the ’555 patent’s introduction of a wireless LAN as a known communication system, as well as the evidence presented by Patent Owner, use of the known term “wireless local area network” in the ’555 patent would have brought to the mind of one of skill in the art the IEEE 802.11 standard for wireless local area networks. Of course, one of skill in the art would have understood that it would be possible to create a WLAN outside the standard, and would have recognized that at least one other standard for WLANs had been proposed. *See* Ex. 2015, 117 (referring to “HIPERLAN”). Patent Owner does not, however, seek to incorporate the entire 802.11 standard into the claims. PO Resp. 19 (arguing, based on Mr. Struhsaker’s testimony regarding the 802.11 standard, that one of skill in the art “would have understood that a ‘wireless local area network’ meant a

wireless network limited in geographic area and that provided direct interconnectivity between computing devices on the network").[18]

In essentially arguing that the lack of express reference to the 802.11 standard in the '555 patent makes extrinsic evidence regarding the standard irrelevant, Petitioner does not persuasively challenge Mr. Struhsaker's testimony that the 802.11 standard "defined wireless local area networks at the time of the invention as 1) necessarily limited in geographical area and 2) to allow direct connectivity between devices on the network," Ex. 2007 ¶ 33, i.e., so that "individual computing devices could communicate with one another within the network," *id.* ¶ 47. Mr. Struhsaker's testimony and the additional evidence he cites in support reinforce that a wireless LAN was a known term of art, and included at least the concepts of a limited geographic area and facilitating communication within the wireless LAN. Inclusion of the 802.11 standard as a typical example in the construction of wireless LAN is helpful and appropriate given the evidence as to its adoption as the industry standard at the time of invention.

---

[18] Counsel for Patent Owner stated at oral hearing,

> I'm sure the other standards for local area networks or competing standards also had to be local and they had to allow connectivity of the devices. But you don't need to define local area network as 802.11. We just have to know that's what one of skill in the art knew it to mean and it included those limitations necessarily on what we all understand a LAN to be.

Tr. 22:23–23:2.

d. Interpretation by other tribunals

Patent Owner also contends its proposed construction should be adopted because "courts routinely define a 'local area network' as being restricted to a limited geographical area and as providing direct connectivity between computing devices on the network." PO Resp. 23. The interpretations in the district court and ITC cases cited by Patent Owner do not use the term "direct connectivity," but all of them include a limitation on the geographic area of the network and are consistent with Patent Owner's contention that a local area network provides for communication within the network. *See id.* at 21–23 (citing, e.g., *Helius, Inc. v. Skystream Networks, Inc.*, 2:01-CV-00516 PGC, 2004 WL 5676044, at *2 (D. Utah Apr. 16, 2004) (construing "local area network" as "a group of computers dispersed over a relatively limited area and connected by a communications link that enables any device to interact with any other on the network" (emphasis omitted))). Patent Owner does not focus on a particular interpretation or the court's or Commission's reasoning in a particular case. The persuasive value of any one case is, therefore, limited here, but as a group the interpretations of LAN and WLAN by other tribunals support the conclusions reached herein as to the meaning of the term "wireless local area network transceiver."

Petitioner argues the cases relied on by Patent Owner "involved unique facts and circumstances, as well as patents with specific claims and disclosures, none of which share a common inventor, assignee, or parent/child relationship with the '555 patent." Reply 13. "Using these unconnected cases to construe claim terms of the '555 patent would improperly impart unrelated facts into the current proceeding," argues

Petitioner. *Id.* The majority decision adopts a similar view, noting also that those cases "involve construction of the terms WLAN and LAN, but not of WLAN *transceiver*." Maj. Op. 23.

Notably, despite disparate patents and records, the constructions from the other tribunals are remarkably similar. *See* PO Resp. 21–23. As to the requirement of a LAN or WLAN to provide for devices on the network to communicate with each other on the network, the interpretations refer to "a communications network that provides wireless connectivity," "computers . . . that are interconnected so they can exchange information," "a group of computers . . . connected by a communications link that enables any device to interact with any other on the network," a "communications network . . . used to link computers and peripheral devices (such as printers, CD-ROMS, modems) under some form of standard control," "a communication network," and a "network of personal computers." *Id.* (internal quotations and emphasis omitted). The similarity of the constructions despite the different records supports Patent Owner's position that the term wireless LAN was known to those of ordinary skill in the art and had some meaning beyond its collection of individual words in the phrase.

e. The majority decision

The majority decision "disagree[s] with the approach taken by Petitioner and Patent Owner . . . of relying on the definition of a network (*i.e.*, LAN or WAN), or of requiring a WLAN transceiver to form part of a WLAN." Maj. Op. 14. The majority decision determines that a "wireless local area network transceiver" does not itself require a wireless local area network, "but rather recites a particular type of transceiver." *Id.* The decision states that "[n]othing in the specification or claims indicates the

term WLAN transceiver should be construed to require any of the features set forth in the parties' proposed constructions." *Id.* I cannot agree.

As discussed above, the purpose of the '555 patent is to provide an integrated device that is able to connect two communication networks. Reading claim 1 not to require a network despite inclusion of a "wireless local area network transceiver" divorces the claim from the context of its written description. In describing wireless communication systems, including wireless local area networks, the background of the '555 patent expressly states that "[t]he network infrastructure of such systems typically include *fixed-location transceivers, sometimes referred to as access points*." Ex. 1001, col. 5, ll. 3–6 (emphasis added). In other words, the written description's (and claim 1's) later use of the term "WLAN (wireless local area network) transceiver," *e.g.*, *id.* at col. 8, l. 5, refers to an access point of a wireless LAN. This understanding is consistent with and buttressed by the patent's use of the term "wireless local area network (LAN) connection" to refer to the connection between the wireless LAN transceiver and communication devices in subscriber premises 121. *E.g.*, *id.* at col. 8, ll. 44–47. To remove all doubt, at the end of the written description, in describing operation of the system in connection with Figure 7, the '555 patent explains that, by adding a WLAN transceiver to a subscriber station in a fixed wireless communication system, "[a] mobile station *operable in a wireless local area network* is thereby able to communicate in the WLAN coverage area encompassing the subscriber station at which the local-network radio transceiver is positioned." *Id.* at col. 12, ll. 40–44 (emphasis added). Given these descriptions, one of skill in the art reading claim 1 would conclude that

the "second wireless local area network transceiver" forms a wireless LAN with the plurality of computing devices recited in the claim.

Relying heavily on the '555 patent's statement that "[t]he WLAN transceiver defines a coverage area 242 defining a cell," Ex. 1001, col. 8, ll. 8–9, the majority decision determines that "a WLAN transceiver is a transceiver that defines the coverage area of the wireless local area network," Maj. Op. 12. The decision then essentially interprets the claimed wireless LAN transceiver to be an adapter that could be used to form a wireless LAN, *see id.* at 14, but in so doing effectively reads out of the claim the term "wireless local area network."

I agree with the majority's determinations that "direct connectivity" in the form of an ad-hoc network connection between computing devices (not involving an access point) is not required to form a wireless LAN, and that a wireless LAN need not be confined exclusively to the IEEE 802.11 Wi-Fi standard. These are not, however, the positions of the Patent Owner. Although Patent Owner's Response refers in part to portions of evidence relating to 802.11's ad-hoc functionality, *see* PO Resp. 20 (citing Ex. 2015, 117), Patent Owner appears to argue primarily that the devices within a wireless LAN must be able to communicate with one another within the network, "without accessing the wide area cellular network or the internet," *id.* at 20–21. Counsel for Patent Owner clarified at the oral hearing what Patent Owner means by "direct connectivity," stating that "[t]he direct connection doesn't have to be from device to device. It has to be within the network. It has to mean not going back to the phone company, not going back to the internet and up through all the terminals of that. . . ." Tr. 20:23–26. Regarding the 802.11 standard, Patent Owner does not even include

reference to it in its proposed construction, *see* PO Resp. 16, and at the oral hearing agreed that other standards could be used to form a LAN.[19] Moreover, in focusing on whether the dictionary definitions relied on by Patent Owner require direct wireless connectivity between devices (understood as an ad-hoc Wi-Fi connection), *see* Maj. Op. 23, the majority decision misses the evidence that one of skill in the art would have understood a wireless LAN to be of limited geographic area *compared to a wide area network* and to provide for communication *within the network* of devices on that network, as discussed *supra*.

The majority decision also interprets the ’555 patent’s statement that a WLAN “provide[s] for radio communications with mobile stations positioned within communication range of such networks,” Ex. 1001, col. 4, ll. 64–65, to “indicate[] only that mobile stations positioned within the WLAN can communicate with an access point, not that mobile stations can communicate with each other within the network,” Maj. Op. 27. The majority decision does not explain what purpose such communications with the access point may have, if not to facilitate communications between mobile stations operated by users in the network, which is the plain meaning

---

[19] Counsel for Patent Owner stated the following at the oral hearing:

> I’m sure the other standards for local area networks or competing standards also had to be local and they had to allow connectivity of the devices. But you don’t need to define local area network as 802.11. We just have to know that’s what one of skill in the art knew it to mean and it included those limitations necessarily on what we all understand a LAN to be.

Tr. 22:23–23:2.

of this paragraph of the ’555 patent. Of course, although not discussed in this paragraph of the ’555 patent, a wireless LAN access point may also facilitate communication with other networks if such networks are accessible,[20] but this possibility does not defeat the LAN’s defining characteristic of providing for communication within the network.[21]

f. Conclusion

In summary, for the reasons given, the disputed claim term “wireless local area network transceiver” means a transceiver that forms a wireless local area network (wireless LAN) with the plurality of computing devices and facilitates communications with those devices, including communications within the network. A wireless LAN is limited in geographic area compared to a wide area network, and typically complies with the IEEE 802.11 standard.

B. Petitioner has not met its burden

To establish that Hohnstein teaches the claimed “wireless local area network transceiver,” the Petition and the majority decision rely on

---

[20] For example, as noted *supra*, in defining a LAN, *Novell’s Dictionary of Networking* states that when computers are linked together to form a network, “[u]sers can then communicate with each other, share resources (such as data storage and printers), and access remote computers or other networks.” Ex. 2010, 331.

[21] *See, e.g.*, Ex. 2009, at 276 (defining LAN in part as “[a] group of computers and other devices dispersed over a relatively limited area and connected by *a communications link that enables any device to interact with any other on the network*” (emphasis added); Ex. 2008, at 392 (noting that “*[c]ommunication within a local area network* is not subject to external regulations” (emphasis added)).

Hohnstein's teaching that access point 22, which may be a "local radio access point (LRAP)," has a coverage area 24. Pet. 27–28 ("Therefore, access data terminal 566 and antennas 570 and 574 [of access point 22], define a local area network by defining coverage area 24."); *see* Maj. Op. 35–36. The Petition offers no other evidence that access point 22 is a wireless local area network transceiver, or that it forms a wireless local area network with the plurality of computing devices recited in claim 1. For this reason, in view of how one of skill in the art would interpret the wireless LAN transceiver in claim 1, Petitioner has not met its burden to establish facts supporting unpatentability by a preponderance of evidence.[22]

Consistent with its interpretation of claim 1 not to require the wireless LAN transceiver to form a wireless LAN when connecting to the plurality of computing devices, the majority decision also does not examine further whether Hohnstein's access point 22 forms a wireless local area network. The decision discusses several of Patent Owner's arguments, *see* Maj. Op. 37–43, but at most finds Hohnstein's access point 22 defines a coverage area that may be a "cell," *id.* at 36, and that Hohnstein "indicates a skilled artisan would have understood the antennas of access points 22 *could have been* adapted for small or geographically limited coverage areas," *id.* at 40 (emphasis added). The specific teaching relied on is Hohnstein's statement that "the antennas of access points 22 may be adapted to the requirements of communication system 20 including data rates, access frequencies, backhaul frequencies, regulations, mounting structures, noise, obstructions,

[22] No additional evidence is offered to show Hohnstein teaches the "second wireless local area network transceiver" recited in claim 11. *See* Pet. 52–53.

disturbances, and the like." *Id.* at 39 (internal quotation omitted). This passage does not describe making the coverage area to cover a limited geographic area or explore the reasons one of ordinary skill in the art *would have* done so, and does not teach formation of a wireless LAN using a wireless LAN transceiver. The majority decision also determines that Figure 1 and other passages of Hohnstein similarly show coverage areas 24 "could be relatively small coverage areas," Maj. Op. 41, or that access point 22 "could have covered a local coverage area," *id.* at 42.

The balance of the majority decision's discussion of the claimed wireless LAN transceiver focuses on whether the devices in the coverage area of Hohnstein's access point 22 are directly connected to each other without involving access point 22, *id.* at 37–38, or whether the claims are limited to a maximum diameter of coverage area, *id.* at 42–43. Consistent with its claim interpretation, the majority decision does not consider whether access point 22's connections with computing devices in its coverage area form a "network" that is not merely an extension of the larger mesh network surrounding it. Therefore, the critical question of whether Hohnstein's access point 22 forms a wireless local area network remains unanswered, and Petitioner cannot be shown to have met its burden to establish facts supporting unpatentability by a preponderance of evidence.

I also consider additional issues raised by Patent Owner's and Petitioner's arguments. Patent Owner argues Petitioner and its expert have not shown that the access data terminal 566 of Hohnstein is a wireless local area network transceiver. PO Resp. 24. Patent Owner does not dispute that Hohnstein's access data terminal 566 has a coverage area and is in direct wireless broadband communication with a plurality of computing devices

located within its coverage area. Rather, Patent Owner argues "Petitioner and its expert provide no support whatsoever for the logical leap that any 'coverage area' provided by a terminal and antennas must therefore 'define a local area network.'" *Id.* at 25.

I agree with Patent Owner's assessment of the evidence presented in the Petition. Based on how one of ordinary skill in the art would have understood the term "wireless local area network transceiver," Petitioner must show more than that the transceiver defines a coverage area and wirelessly communicates with mobile devices within the coverage area. The Board noted in the Decision on Institution that Hohnstein states its access point may be a "local radio access point (LRAP)." Inst. Dec. 22. On the current record, however, I am persuaded that use of the word "local" is insufficient evidence that the connections between Hohnstein's subscriber stations and access point 22 form a wireless local area network.

In terms of coverage area, for the reasons discussed above in construing the term "wireless local area network transceiver," one of ordinary skill in the art would have considered not only whether the coverage area of a transceiver was relatively smaller than another coverage area, but whether it was limited in geographic area as compared to a wide area network. Use of the term "local" is insufficient to make that determination.

Relating to communication, and more fundamentally to the concept of a network, Petitioner's evidence presented in the Petition does not explain how the connections between Hohnstein's access point 22 and subscriber stations 26 form a definable network that provides for communication within it. Petitioner does not present evidence that these devices are anything other

than part of a larger network that facilitates communication using Hohnstein's distribution points 40. This larger network, however, is not asserted to be "local" or limited in geographic area.

In the Reply, Petitioner contends Hohnstein teaches a "wireless local area network transceiver" under either Petitioner's or Patent Owner's construction of the term, and also that Hohnstein "at least makes obvious" such a transceiver. Reply 19–29. I address each argument in turn.

First, Petitioner's argument based on its own construction is not supported because it is based on an unreasonably broad construction. As discussed above, in essence Petitioner and Dr. Kotzin conclude one of skill in the art would have disregarded the ordinary meaning of "wireless local area network" because a definition is not provided in the '555 patent and it does not refer to or incorporate the IEEE 802.11 standard. In a different framing of its proposed construction, Petitioner contends "a POSA would have understood that the claimed '**local** area network' is a collection of interconnected entities that are limited in geographic scope," and that "an entity is anything capable of sending and or receiving information." Reply 19 (citing Ex. 1020 ¶ 23). Based on the '555 patent, as well as the extrinsic evidence presented by Patent Owner, "wireless local area network transceiver" should be construed to mean a transceiver that forms a wireless local area network (WLAN) with the plurality of computing devices and facilitates communications with those devices, including communications within the network. In addition, a WLAN is limited in geographic area compared to a wide area network, and typically complies with the IEEE 802.11 standard.

Petitioner argues "[a]djectives such as 'local' or 'wide area' are relative terms which help describe the geographic area over which the entities are separated and both are limited in geographic scope." Reply 20 (citing Ex. 1020 ¶ 23). Dr. Kotzin's testimony to this effect is not supported by any additional evidence. Although it may be true that in practical terms the geographic area of any network is limited to some extent, this broad understanding of "limited," and Petitioner's assertions based on it, eviscerates the concept of a limited geographic area and contradicts the computer dictionary definitions presented by Patent Owner's expert showing that a local area network is limited in geographic area *as compared to a wide area network*. As in the Petition, without evidence as to whether a "local area network" exists distinct from Hohnstein's overall network, beyond the mere fact that subscriber stations 26 connect to access point 22 and not directly to the rest of the network, Petitioner has not shown Hohnstein teaches a "wireless local area network transceiver" as one of skill in the art would have understood that term.

Second, Petitioner's arguments and evidence that Hohnstein teaches a "wireless local area network" based on Patent Owner's construction also fall short. Petitioner contends "Hohnstein does indeed teach that its coverage area may be small and limited in geographical scope, which a POSA would have understood as fitting even Patent Owner's unsupported, quantified range of '1000 feet.'" Reply 20–21 (quoting PO Resp. 27). In support, Petitioner relies on Hohnstein's teaching that coverage area 24 may be formed from many independent sectors if access point 22 uses many directional antennas or from a single region resulting from the use of an omnidirectional antenna, and that directional antennas are often used to form

focused coverage areas. Reply 21 (citing Ex. 1002, col. 4, ll. 14–17, col. 1, ll. 47–48). Petitioner and Dr. Kotzin also note Hohnstein's teaching that the "exact shape of coverage area 24 depends on a variety of factors including the type of antenna 574, frequency of transmission, local geography, and nearby obstructions." *Id.*; Ex. 1008 ¶ 25; Ex. 1002, col. 15, ll. 40–43. Hohnstein's reference to the "shape" of the coverage area, however, is a reference to the previous sentence's description of the preferable "substantially uniform, omnidirectional coverage area 24 around access point 22," Ex. 1002, col. 15, ll. 38–40, and does not appear to refer to intentionally varying the size of the area. Even if the size of the coverage area could be varied, Petitioner does not persuasively explain why this language would be understood by one of ordinary skill in the art to refer specifically to the limited area of a local area network as compared to a wide area network.

Petitioner contends one of skill in the art would have understood that Figures 1 and 3 of Hohnstein, portions of which are shown below, illustrate coverage areas 24 that are smaller than what Patent Owner considers to be a large coverage area of many miles. Reply 22.

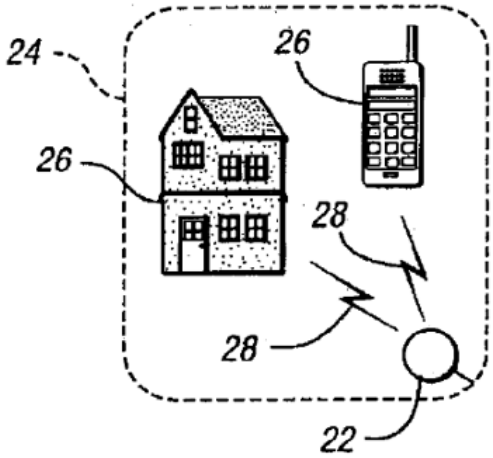

Figure 1

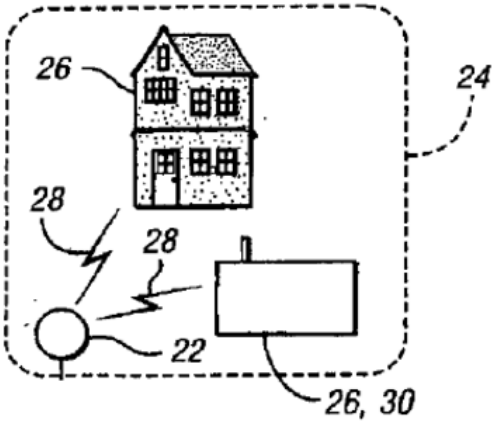

Figure 3

The portions of Hohnstein's Figures 1 and 3 reproduced above show coverage area 24 of access point 22, and show that each subscriber unit 26 within coverage area 24 may establish two-way wireless link 28 with access point 22. Ex. 1002, col. 4, ll. 16–18. Petitioner argues "the coverage area could also have included a parking lot, where a vehicle could be parked, allowing for the parked vehicle to connect with the network through an onboard device, for example." Reply 22 (citing Ex. 1020 ¶ 26).

Petitioner argues there are many similarities between Hohnstein and the '555 patent, including that both disclose their coverage areas as including mobile telephones and computers that may be associated with a house or building, and both use the term "cell" to describe the coverage area. Reply 23–24. The record does not contain persuasive evidence that these aspects are exclusive to wireless LANs as opposed to the coverage area of any transceiver within a wireless communication system.

Petitioner further argues "Hohnstein discloses transceiver mounting in the same manner as how the '555 patent's embodiments are disclosed." Reply 24–25. As Petitioner's argument goes, "Hohnstein discloses to mount

the second transceiver on a structure, such as the light pole shown in Figure 9," and "[t]he '555 patent discloses that . . . "the wireless communication device [having the second transceiver] is mounted on the outside of a building,' which a POSA would have understood as potentially being vertically even higher than a light pole." *Id.* Dr. Kotzin testifies that the potentially higher mounting position in the '555 patent could provide a larger coverage area. Ex. 1020 ¶ 30. "These similarities," Petitioner concludes, "further underscore why the coverage area that is limited by geographic scope, as alleged by Patent Owner to be required, is taught by Hohnstein." Reply 25.

Patent Owner contends "Hohnstein's access point 22 transmits a wide area network, not a local area network." PO Resp. 25. Patent Owner relies on Mr. Struhsaker's testimony that Hohnstein teaches a single-layer, modular wireless mesh network. *See id.* (citing Ex. 2007 ¶¶ 55–59). Mr. Struhsaker testifies that "access point 22 and distribution point 40 of Hohnstein can have the exact same structure and functional capabilities." Ex. 2007 ¶ 56. ATM/IP switch 300 within distribution point 40 "functions as a server when operating as distribution point 40 and as a client when operating as access point 22." Ex. 1002, col. 11, ll. 17–20; *see* Ex. 2007 ¶ 56. Figure 5 of Hohnstein also labels the transmission tower "22, 40," indicating this modular capability to function as either an access point 22 or distribution point 40. Ex. 1002, Figure 5; *see* Ex. 2007 ¶ 56. Mr. Struhsaker testifies that this modular capability establishes that Hohnstein's communication system is a wireless mesh network, and states that mesh networks have been known in the art since at least 1993. Ex. 2007 ¶¶ 55–56. Mr. Struhsaker's testimony is that in the '555 patent, on the other hand, "the

terrestrial base station transmits a wide area network which overlays the local area networks transmitted by the wireless communication devices," and the base station and wireless communication devices would never be able to swap roles. *Id.* ¶ 58.

Mr. Struhsaker relies on additional evidence to support the determination that Hohnstein teaches access points 22 are part of a wide area network and do not form a local area network. Mr. Struhsaker notes that Figure 1 of Hohnstein shows an automobile as an example of a subscriber station serviced by access point 22. *Id.* ¶¶ 62, 65. He testifies that coverage for the short period of time that an automobile would pass through the coverage area of a local area network would be pointless and impractical, and determines that Hohnstein's coverage area 24 "cannot, therefore, be a wireless local area network and must be a wide area network." *Id.* ¶ 65.

As noted above, Petitioner argues Hohnstein's coverage area 24 could include a parking lot where a vehicle could be parked and connect with the network. Reply 22. This is not discussed in Hohnstein, however, and Hohnstein elsewhere suggests the automobile is an example of a "moving subscriber unit" as discussed in connection with Figure 8 of Hohnstein. *See* Ex. 1002, col. 13, ll. 23–25, Fig. 8. Accordingly, Mr. Struhsaker's understanding of the purpose of depicting an automobile in Hohnstein is better supported by evidence.

Mr. Struhsaker also notes that Petitioner contends Hohnstein's coverage area 24 is created by antenna module 502, a local radio access point, and Mr. Struhsaker testifies that Hohnstein's antenna module 502 "is clearly a wide area transceiver, which provides coverage over many miles."

Ex. 2007 ¶ 66. An embodiment of antenna module 502 is shown in Figure 11 of Hohnstein, which is reproduced below.

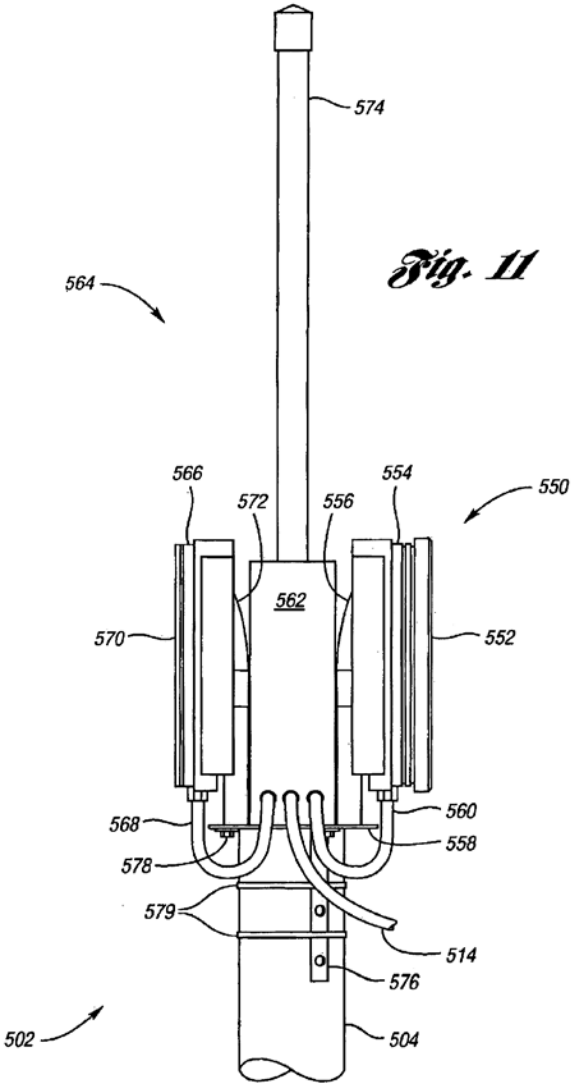

Figure 11 shows an elevation view drawing of antenna module 502, including backhaul antenna 552, which is part of backhaul system 550, and directional access antenna 570 and omnidirectional antenna 574, which form coverage area 24. Ex. 1002, col. 15, ll. 13–45. Mr. Struhsaker states that "antenna module 502 cannot provide a wireless local area network because

the coverage area of the antenna is substantially greater than the limited geographic coverage of a wireless local area network." Ex. 2007 ¶ 23.

Petitioner and its expert do not provide persuasive evidence rebutting Mr. Struhsaker's testimony regarding the range of Hohnstein's antenna module 502. As noted above, Petitioner argues the similarity between Hohnstein's mounting of antenna module 502 on a light pole and the '555 patent's mounting on the outside of a building. Reply 24. Despite the possibility that an antenna mounted on a building may be higher than a light pole and thereby provide more coverage, the '555 patent's mounting of the antenna on a building is consistent with its depiction of the WLAN transceiver providing a coverage area for a particular subscriber premises, which may be a residential or commercial building, rather than providing coverage for an area that merely includes subscriber premises. Ex. 1001, Fig. 5. Hohnstein's mounting on a light pole or transmission tower is more consistent with a wide area network that may include a residential home, for example, but is not dedicated to it.

Petitioner responds that "Patent Owner is again ignoring that access point 22 is described as a 'local' access point and that Hohnstein discloses that the antenna can be specifically designed to provide the needed coverage." Reply 25. These arguments are not persuasive for the reasons previously discussed, and in light of the countervailing evidence identified by Patent Owner.

Petitioner also relies on Dr. Kotzin's testimony that "a POSA would have understood that the 'access point' in Hohnstein meant an 'access point' compliant with the 802.11 standard." Ex. 1020 ¶ 33; *see* Reply 26. Dr. Kotzin relies on Hohnstein's depiction of two access points with coverage

areas being similar to what is depicted in a figure in the 802.11 standard, and that several of Patent Owner's exhibits discuss "access points" as being integral to 802.11 and local area networks. Ex. 1020 ¶¶ 14–15, 33–36. Again, however, the record does not contain persuasive evidence that these similarities in depiction or the term "access point" are exclusive to a local area network *as compared to a wide area network*. Petitioner also does not present persuasive evidence that Hohnstein's access point provides the same functionality as a wireless local area network transceiver, including being configured to assist with communications within the network, when requested.

Third, Petitioner's contention in the Reply that "Hohnstein at least makes obvious a second wireless local area network transceiver that provides 'direct wireless connectivity between multiple computing devices within a limited geographic area,'" Reply 25–26 (citing Ex. 1020 ¶32), is untimely. This argument constitutes a change in position from the Petition, where Petitioner argued Hohnstein teaches the wireless local area network transceiver. *See* Pet. 27–29. Petitioner's presentation of its new theory in the Reply does not give Patent Owner an adequate opportunity to respond and is outside the bounds of acceptable development of the record in response to Patent Owner's arguments. Petitioner's argument is also not fully developed, as it fails to explore the reasons one of ordinary skill in the art would have adapted Hohnstein's access point 22 to form a wireless LAN with the subscriber stations within its coverage area.

In addition to the evidence discussed above, Petitioner contends "Hohnstein, unlike the '555 patent, explicitly mentions that aspects of ***802.11*** could be used for communication." Reply 28. Petitioner argues

"Hohnstein mentions an intelligent switch that works under the ***802.11*** specification, which would teach or at least suggest to one [of] ordinary skill as working in conjunction with a LAN incorporating 802.11 wireless." *Id.* Petitioner contends "a POSA would have understood that Hohnstein's mention of 802.11 invokes 802.11 as the context for the entire Hohnstein system, in that disclosed embodiment, including the base stations (or distribution points) 40, the access points 22 and computing devices 26." *Id.* Petitioner thus concludes that "under Patent Owner's reasoning, a POSA would have at least found it obvious that the second local wireless area network transceiver of access point 22 in Hohnstein would provide 'direct wireless connectivity between multiple computing devices within a limited geographic area.'" *Id.* Petitioner asserts that "[p]roviding Hohnstein's access points with the functionality of the proposed construction would have been conducted using routine skill and knowledge in the art by making basic known software and hardware implementations." *Id.* at 29. Petitioner's arguments match testimony from Dr. Kotzin. *See* Ex. 1020 ¶ 37–38.

"A reply may only respond to arguments raised in the corresponding opposition, patent owner preliminary response, or patent owner response." 37 C.F.R. § 42.23(b). Responding to arguments raised by Patent Owner means pointing out where the evidence refutes the arguments, rather than presenting an alternate theory. Thus, although the record is expected to be developed somewhat during the trial phase of an *inter partes* review, Petitioner's presentation of the alternate theory in the Reply that Hohnstein "makes obvious" the wireless local area network transceiver is too late for consideration in this proceeding. In addition, Petitioner's argument is not fully developed, as it fails to explore the reasons one of ordinary skill in the

art would have adapted Hohnstein's access point 22 to form a wireless LAN with the subscriber stations within its coverage area.

Conclusion

In view of the foregoing, a preponderance of the evidence of record supports Patent Owner's contention that Hohnstein's access point 22 establishes a wide area network, rather than a local area network, and is, therefore, not a "wireless local area network transceiver," as recited in claim 1. In any event, Petitioner bears the burden of proving by a preponderance of evidence that Hohnstein teaches the claimed "wireless local area network transceiver," and, on this record, has not carried this burden. Thus, Petitioner has not established claim 1 is unpatentable under § 103(a) over Hohnstein and Phillips or Hohnstein and Agrawal.

II. CONCLUSION

Petitioner and the majority decision both reach the incorrect conclusion that the "wireless local area network transceiver" recited in claim 1 of the '555 patent is not required to form a wireless local area network with the "plurality of computing devices" within its coverage area and with which it is directly connected. Based on this improper construction, I would find Petitioner has not carried the burden to show claims 1–20 of the '555 patent are unpatentable. From the majority's contrary decision, I respectfully dissent.

PETITIONER:

David L. Cavanaugh
Daniel V. Williams
Wilmer Cutler Pickering Hale and Door LLP
David.Cavanaugh@wilmerhale.com
Daniel.Williams@wilmerhale.com

Jonathan Stroud
Ashraf Fawzy
Unified Patents Inc.
jonathan@unifiedpatents.com
afawzy@unifiedpatents.com

PATENT OWNER:

Anthony Dowell
Dowell IP
aedowell@dowellip.com

Timothy Devlin
Devlin Law Firm LLC
tdevlin@devlinlawfirm.com