US007373974B2

(12) **United States Patent**
Connell et al.

(10) **Patent No.: US 7,373,974 B2**
(45) **Date of Patent: May 20, 2008**

(54) **DOWNHOLE RELEASE TOOL AND METHOD**

(75) Inventors: **Michael L. Connell**, Duncan, OK (US); **James C. Tucker**, Springer, OK (US)

(73) Assignee: **Halliburton Energy Services, Inc.**, Duncan, OK (US)

(*) Notice: Subject to any disclaimer, the term of this patent is extended or adjusted under 35 U.S.C. 154(b) by 264 days.

(21) Appl. No.: **11/001,171**

(22) Filed: **Nov. 30, 2004**

(65) **Prior Publication Data**

US 2006/0113083 A1 Jun. 1, 2006

(51) **Int. Cl.**
E21B 17/00 (2006.01)

(52) **U.S. Cl.** **166/242.6**; 166/377; 166/242.1; 166/383

(58) **Field of Classification Search** 166/377, 166/242.1, 424.6, 383, 242.6
See application file for complete search history.

(56) **References Cited**

U.S. PATENT DOCUMENTS

5,146,984 A 9/1992 Pleasants 166/238
5,507,349 A 4/1996 Wray et al. 166/382
5,561,278 A 10/1996 Rutten ..... 200/5 A
5,718,291 A * 2/1998 Lorgen et al. 166/377
5,984,029 A * 11/1999 Griffin et al. 175/321
6,131,953 A 10/2000 Connell et al. 285/3
6,269,883 B1 * 8/2001 Gissler et al. 166/340
6,766,853 B2 7/2004 Restarick et al. 166/242.3
2001/0030048 A1 10/2001 Mackenzie et al. 166/380
2003/0102132 A1 6/2003 Estep et al. 166/377
2004/0045704 A1 3/2004 Bowles 166/242.7
2004/0055757 A1 3/2004 Beall 166/382

* cited by examiner

Primary Examiner—David J. Bagnell
Assistant Examiner—Brad Harcourt
(74) *Attorney, Agent, or Firm*—John W. Wustenberg; Fish & Richardson P.C.

(57) **ABSTRACT**

A release tool includes a first subassembly and a second subassembly. A connector is operable to selectively coupled the first subassembly to the second subassembly. A release guard is operable to selectively inhibit release of the connector. The release guard operable to inhibit release of the connector in response to a pressure difference between an interior of the release tool and an exterior of the release tool.

32 Claims, 3 Drawing Sheets

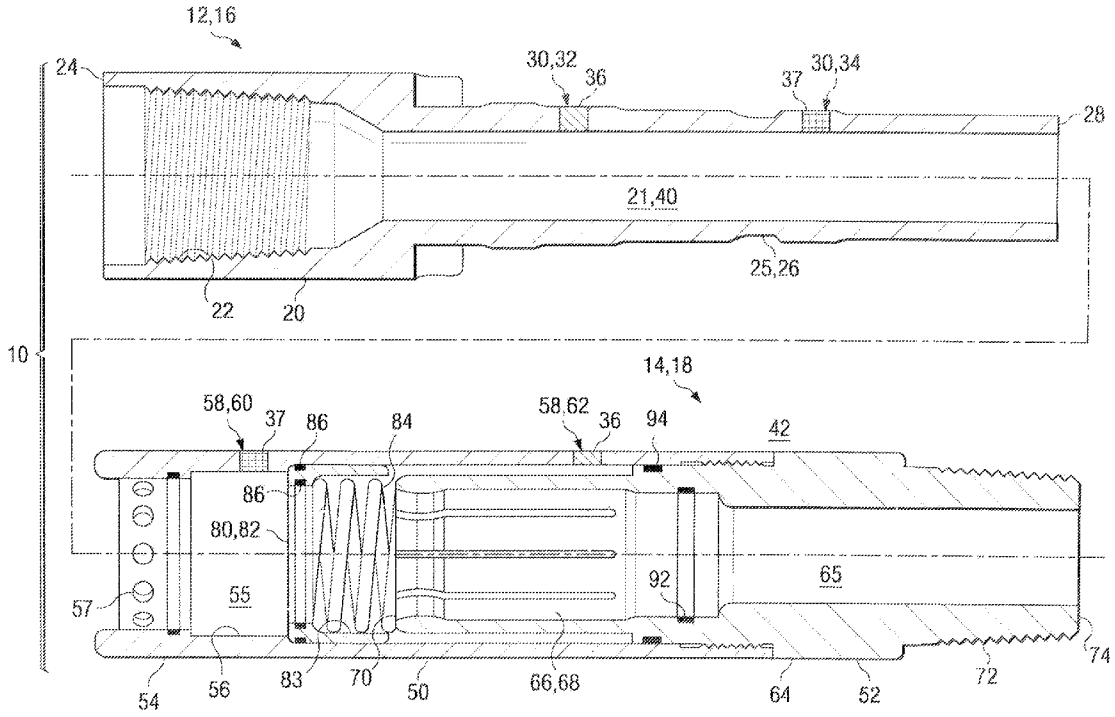

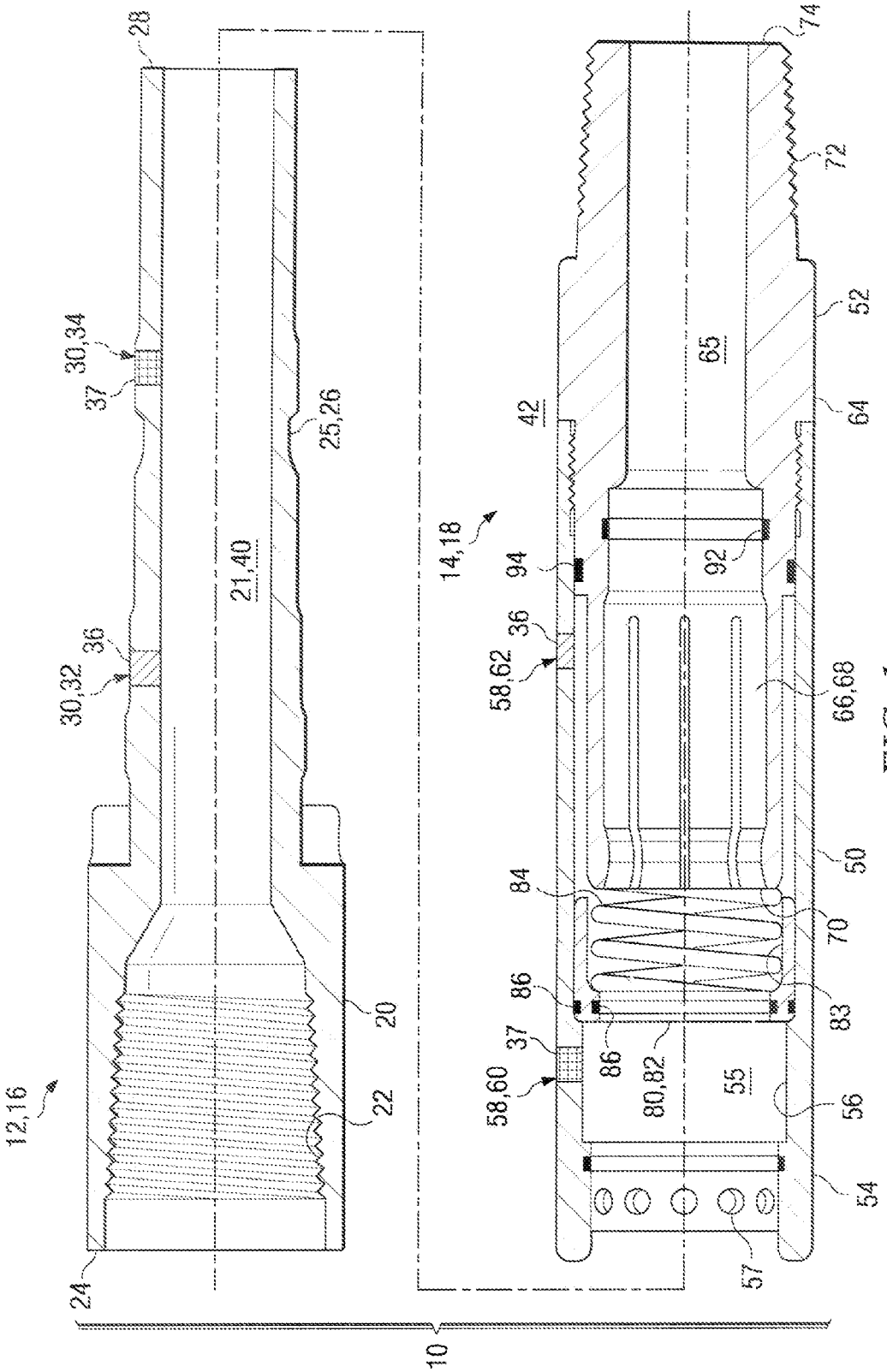
28
30,34
37
25,26
21,40
36
30,32
12,16
20
22
24
10
74
72
52
65
42
64
14,18
94
92
36
58,62
66,68
50
84
70
86
83
37
86
80,82
55
58,60
56
54
57

FIG. 1

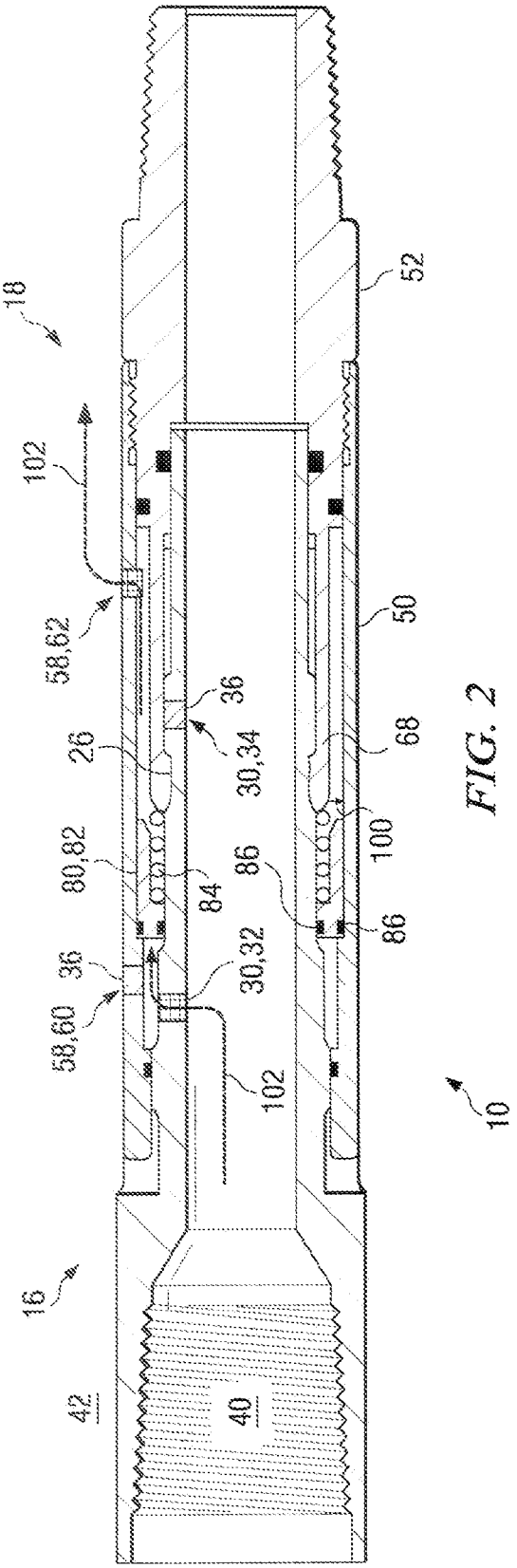
18
102
58,62
26
80,82
36
58,60
16
42
40
52
50
36
30,34
84
30,32
102
68
100
86
86
10

FIG. 2

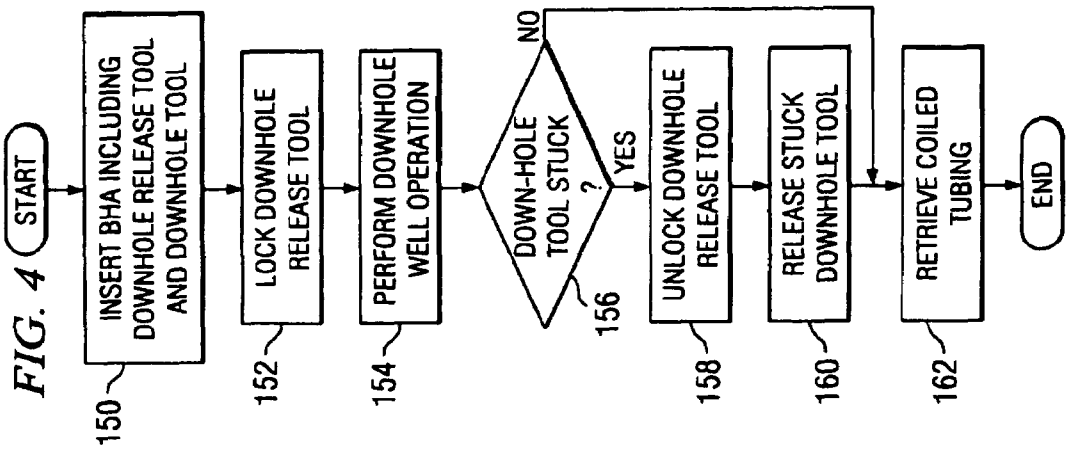
START
INSERT BHA INCLUDING DOWNHOLE RELEASE TOOL AND DOWNHOLE TOOL
LOCK DOWNHOLE RELEASE TOOL
PERFORM DOWNHOLE WELL OPERATION
DOWN-HOLE TOOL STUCK ?
NO
YES
UNLOCK DOWNHOLE RELEASE TOOL
RELEASE STUCK DOWNHOLE TOOL
RETRIEVE COILED TUBING
END
150
152
154
156
158
160
162

FIG. 4

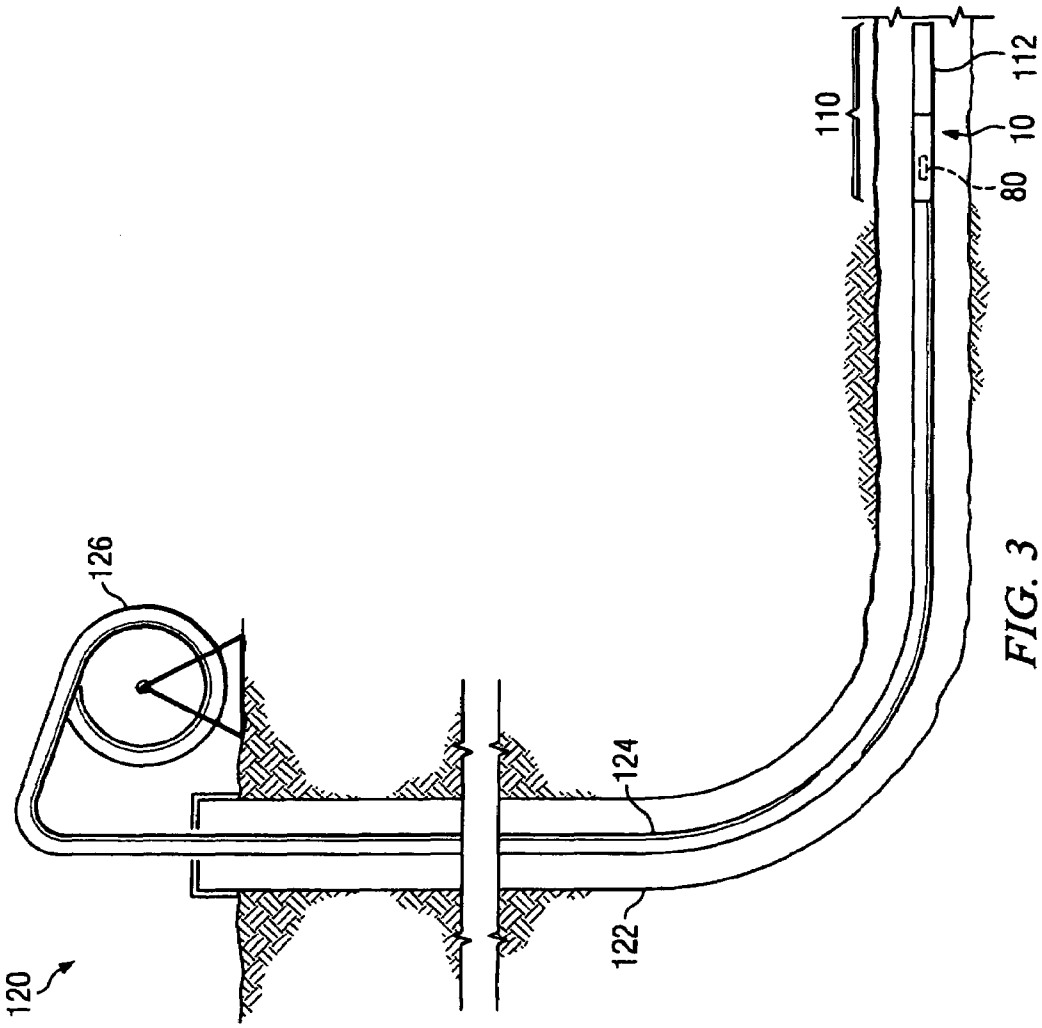
120
126
124
122
110
112
10
80

FIG. 3

DOWNHOLE RELEASE TOOL AND METHOD

TECHNICAL FIELD

This disclosure relates generally to the field of downhole tools, more particularly to a downhole release tool and method.

BACKGROUND

Coiled tubing is often used for drilling and servicing oil and gas wells. Coiled tubing is flexible, small-diameter continuous steel tubing. In drilling operations, coiled tubing may be used for drilling wells that deviate from vertical. The coiled tubing conveys drilling fluid to a downhole drilling motor that drives a drill bit for drilling. In servicing operations, coiled tubing may be used for logging, cleaning, initiating flow, well simulation, and cementing. Coiled tubing generally reduces trip time compared to jointed tubing.

Several types of emergency releases have been used for disconnecting a stuck downhole tool from coiled tubing. For example, shear disconnects, hydraulic disconnects and electrical disconnects have been used. Such disconnects typically include upper and lower sections with seals to prevent leakage.

Shear connects use shear pins or screws that hold the sections together. In the event the downhole tool becomes stuck in the well, the coiled tubing is pulled with sufficient tension to break the cumulative shear pin's strength. Hydraulic disconnects are typically ball-activated release devices. Hydraulic disconnects are capable of holding high tension and pressure because they are pressure-balanced. Electrical disconnects release the downhole tool from the coiled tubing by applying an electrical signal through a wire to the release device.

SUMMARY

A downhole release tool and method are provided. In accordance with one embodiment, a release tool includes a first subassembly and a second subassembly. A connector is operable to selectively couple the first subassembly to the second subassembly. A release guard is operable to selectively inhibit release of the connector.

In accordance with one or more specific embodiments, the release guard may be operable to inhibit release of the connector by blocking release movement of the connector. For example, the release guard may be biased to allow release movement of the connector and moveable to block the release movement of the connector. A release guard may be moveable in response to at least one downhole condition. The downhole condition may be a downhole pressure or other condition.

Technical advantages of one, some, all or none of the embodiments may include a downhole release tool that reduces or eliminates accidental release while allowing release at a relatively low parting force. For example, release is inhibited at a first downhole condition, such as during a downhole well operation. Accordingly, large coiled tubing or other units need not be deployed for a job.

Another technical advantage of one, some, all or none of the embodiments is a downhole release tool with a release mechanism that is not dependent on circulation or electrical signals. For example, release may be selectively allowed or inhibited in response to a downhole pressure condition. Accordingly, a stuck downhole tool may be released in the event of a screen-out. In addition, fracturing and other operations requiring high flow rates of sand-laden fluids can be performed without damage to the release mechanism.

The details of one or more embodiments of the downhole release tool are set forth in the accompanying drawings and the description below. Other features, objects, and advantages of the downhole release tool will be apparent from the description and drawings, and from the claims.

DESCRIPTION OF DRAWINGS

FIG. **1** is a cross-sectional view illustrating one embodiment of a release tool with upper and lower subassemblies disconnected;

FIG. **2** is a cross-sectional view of the release tool of FIG. **1** with the upper and lower subassemblies connected;

FIG. **3** is a cross-sectional view, not necessarily to scale, illustrating one embodiment of use of a bottom hole assembly (BHA) including the release tool of FIG. **1**; and

FIG. **4** is a flow diagram illustrating one embodiment of a method for performing a downhole well operation with a BHA including a downhole release tool.

Like reference symbols in the various drawings indicate like elements.

DETAILED DESCRIPTION

FIG. **1** illustrates a downhole release tool **10** in accordance with one embodiment. In this embodiment, the downhole release tool **10** comprises a first subassembly **12** and a second subassembly **14**. The first subassembly **12** may be an upper subassembly **16** configured to connect to a tubing string. The tubing string may be coiled tubing, jointed pipe or other tubular coupling the downhole release tool **10** to a rig or other surface unit. The second subassembly **14** may be a lower subassembly **18** configured to connect to a downhole tool. As described in more detail below, the downhole tool may be a fracture or other tool for completing and/or servicing an oil, gas or other well.

Referring to FIG. **1**, the upper subassembly **16** comprises an elongated cylindrical body **20** defining an interior passageway **21**. An internal thread **22** is machined or otherwise formed at an upper end **24** of the cylindrical body **20** for attachment to a coiled tubing or other suitable connector. A receiver **25** is machined or otherwise formed on an outer diameter of the cylindrical body **20** toward the lower end **28** of the cylindrical body **20**. The receiver **25** may comprise a groove **26** or other configuration operable to receive and retain a mating protuberance **66** of the lower subassembly **18**. The protuberance **66** is described in more detail below and may, for example, comprise collet fingers **68**.

Upper subassembly equalizing vent ports **30** may be drilled or otherwise formed in cylindrical body **20**. Upper subassembly equalizing vent ports **30** may when open communicate pressure and/or fluid between interior passageway **21** or other portion of an interior **40** of the downhole release tool **10** and an exterior **42** of the downhole release tool **10**. In a particular embodiment, upper subassembly equalizing vent ports **30** may comprise a first upper subassembly vent port **32** and a second upper subassembly vent port **34**. The first and second upper subassembly vent ports **32** and **34** may in a particular embodiment each be one-quarter (¼) to three-eighths (⅜) inches in diameter. Depending on a downhole well operation, a plug **36** may be used in one or both of first and second upper subassembly vent ports **32** and **34**. A screen or filter **37** may be disposed

in unplugged ones of the first and second upper subassembly vent ports **32** and **34** for fracture and other operations using sand-laden fluids.

The lower subassembly **18** may comprise a fishneck subassembly **50** and a bottom subassembly **52**. The fishneck subassembly **50** may be threaded or otherwise coupled to the bottom subassembly **52**. In another embodiment, the fishneck subassembly **50** may be integral with the bottom subassembly **52** or may be omitted.

The fishneck subassembly **50** comprises an elongated cylindrical body **54** defining an interior passageway **55**. The cylindrical body **54** may include an interior fishneck **56**. A plurality of shear pin holes **57**, which may be tapped, smooth or otherwise, for connecting the lower subassembly **18** to the upper subassembly **16** with shear pins are drilled or otherwise formed in cylindrical body **54**. The shear pins may comprise pins, screws or other shearable fasteners.

Lower subassembly equalizing vent ports **58** may be machined or otherwise formed in cylindrical body **54**. Lower subassembly equalizing vent ports **58** may when open communicate pressure and/or fluid between the interior **40** and the exterior **42** of the downhole release tool **10**. In a particular embodiment, lower subassembly equalizing vent ports **58** may include a first lower subassembly vent port **60** and a second lower subassembly vent port **62**. The first and second lower subassembly vent ports **60** and **62** may be sized, include a plug **36** and/or include a screen **37** as described in connection with first and second upper subassembly vent ports **32** and **34**. In a specific embodiment described in more detail below, pressure may be communicated between the interior **40** and the exterior **42** of the downhole release tool **10** through a set of upper subassembly equalizing vent ports **30** and lower subassembly equalizing vent ports **58**.

Bottom subassembly **52** comprises an elongated cylindrical body **64** defining an interior passageway **65**. One or more protuberances **66** may extend from cylindrical body **64**. In one embodiment, the protuberances **66** may comprise collet fingers **68** configured to mate with corresponding groove **26**. Collet fingers **68** may encircle an upper end **70** of bottom subassembly **52** and, when the upper and lower subassemblies **16** and **18** are engaged, encircle groove **26**. In this embodiment, collet fingers **68** may deflect outward to release from groove **26**. Suitable space for this release movement is provided between the outer diameter of collet fingers **68** and the facing inner diameter of fishneck subassembly **50**.

External threads **72** may be machined or otherwise formed at a lower end **74** of bottom subassembly **52**. External threads **72** may be configured to couple to one or more downhole tools. As previously described, the downhole tools may comprise a downhole fracture or other tool for a downhole well operation.

Collet fingers **68** and groove **26**, or other mating pieces from the upper and lower subassemblies **16** and **18**, together form a connector operable to couple the lower subassembly **18** to the upper subassembly **16**. Other reusable connectors operable to selectively couple the lower subassembly **18** to the upper subassembly **16** may be used. For example, lugs may be used. Where shear pins are used, the shear pins comprise a secondary, but non-reusable connector.

A release guard **80** is provided in the lower subassembly **18** to selectively inhibit release of the connector between the upper subassembly **16** and the lower subassembly **18**. The release guard **80** inhibits release of the connector by preventing, blocking, restricting, limiting, restraining or interfering with release of the connector. In the collet finger **68** embodiment, the release guard **80** may comprise a floating piston **82** with a skirt **83** disposed in the fishneck **56**. In this embodiment, the floating piston **82** with skirt **83** is moveable to encircle collet fingers **68** and block the outward release movement of the collet fingers **68**. The floating piston **82** or other release guard **80** may otherwise inhibit release of the connector. For example, the release guard **80** may deflect, turn, otherwise slide, inflate or deflate to selectively inhibit release of the connector.

The floating piston **82** may be biased to allow release movement of the collet fingers **68** in a first downhole condition and moveable to block release movement of the collet fingers **68** in a second downhole condition. As described in more detail below in connection with FIG. **2**, the first downhole condition may comprise an equalized pressure between the interior **40** and the exterior **42** of the downhole release tool **10**. The second downhole condition may comprise a pressure difference between the interior **40** and exterior **42** of the downhole release tool **10**. The pressure difference may comprise a minimal pressure difference necessary to overcome the biasing force acting on floating piston **82**. In this embodiment, the equalized pressure may be any pressure differential less than the minimal pressure. The floating piston **82** may be biased with a spring **84**, compressed gas or otherwise. Seals **86** may be included on the internal diameter and external diameter of the floating piston **82**.

Lower subassembly **18**, including fishneck subassembly **50** and bottom subassembly **52**, is internally configured to receive a lower portion of the cylindrical body **20** of upper subassembly **16**. Seals **92** may be provided in the interior passageway **65** of the bottom subassembly **52** to seal the outer diameter of the upper subassembly **16** to the inner diameter of the lower subassembly **18**. Seals **94** may be provided between the fishneck subassembly **50** and bottom subassembly **52** to seal the inner diameter of the fishneck subassembly **50** to the outer diameter of the bottom subassembly **52**.

One or more keys (not shown) may extend from the lower subassembly **18** into a corresponding slot of upper subassembly **16** to hold torque between the upper subassembly **16** and the lower subassembly **18** and thus confine the parting force to separate the upper subassembly **16** from the lower subassembly **18** to a shear force. In one embodiment, the shear force for separating the upper subassembly **16** from the lower subassembly **18** may be less than 20,000 pounds where the release guard **80** is disengaged and may be greater than 50,000 or even 100,000 pounds when the release guard **80** is engaged.

In a specific embodiment, six 3000-pound shear pins may be used in connection with the collet fingers **68**. In this embodiment, the downhole release tool **10** may have a parting force when the release guard **80** is disengaged of approximately 18,700 pounds, 18,000 pounds from the shear pins and 700 pounds from the collet fingers **68**. In this embodiment, when the release guard **80** is engaged, the parting force may be at least 100,000 pounds. Thus, for example, downhole well operations may be carried out without accidental release of the downhole release tool **10** by maintaining engagement of the release guard **80** during all or part of the downhole well operation. In this example, release of the downhole release tool **10** may be performed with a low parting force of 40,000, 30,000, 25,000, 20,000 or less pounds force. The upper subassembly **16**, lower subassembly **18**, floating piston **82** and spring **84** may each comprise stainless steel or other suitable material. The plugs **36** may comprise, for example, stainless or other steel.

FIG. **2** illustrates the downhole release tool **10** with the upper subassembly **16** connected to the lower subassembly **18**. As previously described, the lower subassembly **18** may comprise a fishneck subassembly **50** and a bottom subassembly **52**. Collet fingers **68** extend from the bottom subassembly **52** to and are received by groove **26** in upper subassembly **16**. Floating piston **82** is disposed between the outer diameter of the upper subassembly **16** and the inner diameter of the fishneck subassembly **50**. Spring **84** biases floating piston **82** in a disengaged position. In this position, collet fingers **68** are free to move outwardly in release movement **100**.

In operation, one of the upper subassembly equalizing vent ports **30** and one of the lower subassembly equalizing vent ports **58** are closed with plug **36** with the remaining set open. As used herein, each means each of at least a subset of the identified items. For example, in downhole well operations where fluid is pumped down the coiled tubing into the interior **40** of the downhole release tool **10**, first upper subassembly vent port **32** and second lower subassembly vent port **62** may be open. In this embodiment, in response to a pressure differential between an interior **40** and exterior **42** of the downhole release tool **10**, pressure and/or fluid **102** flows from the interior **40** through the first upper subassembly vent port **32** down onto floating piston **82**. Fluid **102** behind the piston may flow out second lower subassembly vent port **62** as the floating piston travels down against the spring **84**. As used herein, in response to means in response to at least the identified event. Thus, additional, intermediate or other events may occur or also be required.

The pressure forces the floating piston **82** down against the spring **84** which causes the skirt **83** on the lower end of the floating piston **82** to slide down and encircle the collet fingers **68**. This blocks the release movement **100** of the collet fingers **68** and keeps the collet fingers **68** from being pulled out of the groove **26**. As a result, the downhole release tool **10** is, in this embodiment, firmly locked, which may prevent the tool from accidentally being pulled and/or pumped apart.

The pressure differential required to overcome the force of spring **84** and engage the floating piston **82** may be configured by controlling the force of spring **84**. For example, the spring **84** and floating piston **82** may be configured such that the floating piston **82** engages whenever pumping starts and/or continues at a pressure greater or equal to 20 psi. In this embodiment, whenever pumping stops, the pressure in the interior **40** and the exterior **42** of the downhole release tool **10** may equalize to a differential of less than 20 psi and the floating piston **82** be pushed back by the spring **84** to disengage and allow release of the collet fingers **68** and thus the lower subassembly **18** from the upper subassembly **16** in response to a parting force. Thus, if an emergency release is needed, for example in response to a stuck downhole tool, a straight, or shear pull can be applied to the downhole release tool **10** via the coiled or other tubing and the shear pins sheared. The collet fingers **68** are then forced apart and the upper subassembly **16** and coiled tubing removed from the well.

For downhole well operations in which fluid is pumped through the well annulus on the exterior **42** of the downhole release tool **10**, second upper subassembly vent port **34** and first lower subassembly vent port **60** may be open with the remaining ports plugged. In this embodiment, pressure and/or fluid may flow from the exterior **42** of the downhole release tool **10** through the first lower subassembly vent port **60** to act on floating piston **82** and into the interior **40** of the downhole release tool **10** through second upper subassembly vent port **34**. As described above, the pressure forces the floating piston **82** down against the spring **84** and the skirt **83** on the lower end of the floating piston **82** over collet fingers **68**. Other suitable downhole conditions may be used to act on or otherwise move floating piston **82** or other release guard **80**. Thus, pressure and/or fluid flow may otherwise suitably actuate and/or otherwise selectively control engagement and disengagement of release guard **80**.

FIG. **3** illustrates use of the downhole release tool **10** as part of a bottom hole assembly (BHA) **110**. In this embodiment, BHA **110** includes downhole tool **112** connected or otherwise coupled to a lower end of the downhole release tool **10**. The downhole tool **112** may comprise a fracture tool such as a SURGIFRAC tool manufactured by HALLIBURTON or a COBRAFRAC tool manufactured by HALLIBURTON. In other embodiments, the downhole tool **112** may comprise a perforating tool, an acidizing tool, a cementing tool, a logging tool, a production enhancement tool, a completion tool or any other tool capable of being coupled to the downhole release tool **10** and performing a downhole well operation.

Referring to FIG. **3**, well **120** includes a wellbore **122**. The BHA **110** is lowered into the wellbore **122** at an end of coiled tubing **124**. The coiled tubing **124** is inserted and removed from the wellbore **122** by coiled tubing unit **126**. The coiled tubing unit **126** includes a coiled tubing injector that inserts and retrieves the coiled tubing **124**. The coiled tubing **124** and coiled tubing injector may each be rated to a specified pull limit. As previously described, other suitable types of tubing and surface equipment may be used.

In operation, fluid is pumped to the BHA **110** through coiled tubing **124** by coiled tubing unit **126**. During pumping, the release guard **80** engages to lock the downhole release tool **10** and prevent or at least inhibit the downhole tool **112** from being accidentally pumped or pulled apart from coiled tubing **124**. If downhole tool **112** becomes stuck in wellbore **122**, pumping by coiled tubing unit **126** may be terminated to allow pressure within BHA **110** to equalize. In response to pressure equalization, the release guard **80** disengages to unlock the downhole release tool **10**. Coiled tubing unit **126** may then pull on the coiled tubing **124** and thus the downhole release tool **10** to separate from the stuck downhole tool **112**. As previously described, the parting force for separating the coiled tubing **124** from the downhole tool **112** may be less than 25,000 pounds. Accordingly, in this embodiment, large coiled tubing units **126** need not be deployed. Rather, the smaller coiled tubing units **126** capable of pulling, based on limits of the coiled tubing and the coiled tubing injector, 40,000 pounds or less may instead be used.

FIG. **4** illustrates one embodiment of a method performing a downhole well operation with a BHA **110** including a downhole release tool **10**. Referring to FIG. **4**, the method begins at step **150** in which BHA **110** is inserted into a wellbore **122** with coiled tubing **124**. The BHA **110** includes the downhole release tool **10** and downhole tool **112**.

Proceeding to step **152**, the downhole release tool **10** is locked. In a particular embodiment, the downhole release tool **10** may be locked by moving release guard **80** to block release movement **100** of the connector of the downhole release tool **10**. As previously described, release may be otherwise inhibited by preventing, blocking, restricting, limiting, restraining or interfering with release of a connector of the downhole release tool **10**.

At step **154**, a downhole well operation is performed. The downhole well operation may comprise a well completion or service operation. In a particular embodiment, the downhole

well operation may be a downhole fracture operation in which sand-laden slurry is pumped down the coiled tubing **124** or down an annulus outside the coiled tubing **124** for fracturing a subterranean formation. The downhole release tool **10** may remain locked during the downhole well operation in response to continued pumping.

At decisional step **156**, if the downhole tool **112** becomes stuck in the wellbore **122**, the Yes branch leads to step **158**. At step **158**, the downhole release tool **10** is unlocked. In a particular embodiment, the downhole release tool **10** may be unlocked by moving the release guard **80** out of locking position to allow release movement **100** of the connector of the downhole release tool **10**. The release guard **80** may be moved out of locking position by stopping pumping and allowing downhole pressure to equalize between an interior **40** and exterior **42** of the downhole release tool **10**. As previously described, release may be otherwise uninhibited to unlock the downhole release tool **10**.

At step **160**, the stuck downhole tool **112** is separated by pulling on the coiled tubing **124** at the surface with the coiled tubing unit **126**. The parting force may comprise approximately 25,000 pounds or other suitable shear force. Next, at step **162**, the coiled tubing **124** is retrieved with the coiled tubing unit **126**.

Returning to decisional step **156**, if the downhole tool **112** is not stuck, the No branch leads to step **162** in which the coiled tubing **124** is retrieved. In this case, the coiled tubing **124** is retrieved with the complete BHA **110**. Accordingly, release of the downhole tool **112** may be selectively inhibited through pumping, downhole pressure or other suitable operations and/or conditions to limit or prevent accidental tool release.

A number of embodiments of the downhole release tool have been described. Nevertheless, it will be understood that various modifications may be made without departing from the spirit and scope of the disclosure. Accordingly, other embodiments are within the scope of the following claims.

What is claimed is:

1. A release tool, comprising:

a first subassembly;

a second subassembly;

a connector operable to selectively couple the first subassembly to the second subassembly; and

a release guard operable to selectively inhibit release of the connector, the release guard operable to release the connector at a parting force of less than a coiled tubing and coiled tubing injector limit at a first downhole pressure condition comprising an equalized pressure between an interior of the release tool and an exterior of the release tool and to inhibit release of the connector to a parting force greater than the coiled tubing and coiled tubing injector limit in response to a second downhole pressure condition comprising a pressure difference between an interior of the release tool and an exterior of the release tool.

2. The release tool of claim **1**, the release guard operable to prevent release of the connector.

3. The release tool of claim **1**, wherein the first subassembly comprises an upper subassembly and the second subassembly comprises a lower subassembly.

4. The release tool of claim **3**, the lower subassembly comprising an internal fishneck.

5. The release tool of claim **1**, wherein the release guard is operable to inhibit release of the connector by blocking release movement of the connector.

6. The release tool of claim **1**, wherein the release guard is biased to allow release movement of the connector and moveable to inhibit release of the connection.

7. The release tool of claim **1**, wherein the pressure difference comprises a pressure difference generated by pumping a fluid downhole.

8. The release tool of claim **1**, wherein the release guard is biased to allow release of the connector in response to an equalized pressure between the interior of the release tool and an exterior of the release tool.

9. The release tool of claim **1**, wherein the release guard comprises a floating piston.

10. The release tool of claim **1**, the connector comprising at least one protuberance on the first subassembly and a corresponding receiver for the protuberance on the second subassembly.

11. The release tool of claim **1**, the connector comprising a plurality of collet fingers on the first subassembly and a corresponding groove on the second subassembly.

12. The release tool of claim **11**, wherein the first subassembly comprises an upper subassembly and the second subassembly comprises a lower subassembly.

13. The release tool of claim **1**, further comprising a second connector including one or more shear pins.

14. The release tool of claim **1**, wherein the release guard is operable to selectively allow release of the connector and, when the release guard allows release of the connector, the connector is separable by a shear force.

15. The release tool of claim **1**, further comprising a shear pin coupling the first subassembly to the second subassembly.

16. The release tool of claim **1**, further comprising:

a plurality of vent ports operable to communicate pressure between an interior of the release tool and an exterior of the release tool.

17. A bottom hole assembly (BHA), comprising:

a release tool comprising a release guard operable to selectively inhibit release of a connector of the release tool, the release guard operable to release the connector at a parting force of less than a coiled tubing and coiled tubing injector limit at a first downhole pressure condition comprising an equalized pressure between an interior of the release tool and an exterior of the release tool and to inhibit release of the connector to a parting force greater than the coiled tubing and coiled tubing injector limit at a second downhole pressure condition comprising a pressure differential between an interior of the release tool and an exterior of the release tool; and

a tool coupled to the release tool for performing a downhole well operation.

18. The BHA of claim **17**, wherein the downhole tool comprises a fracture tool.

19. The BHA of claim **18**, wherein the release guard is operable to inhibit release of the connector during a fracture operation.

20. The BHA of claim **17**, wherein the release guard is operable to inhibit release of the connector based on a greater pressure in an interior of the release tool than about an exterior of the release tool.

21. The BHA of claim **17**, wherein the release guard is operable to block release movement of the connector.

22. The BHA of claim **17**, wherein the connector comprises a plurality of collet fingers and a corresponding groove.

23. The BHA of claim **22**, wherein release guard is operable to encircle the collet fingers to inhibit release of the connector.

24. A downhole release tool, comprising:

a lower subassembly;

an upper subassembly;

a plurality of collet fingers extending from the lower subassembly;

a groove in the upper subassembly configured to receive the collet fingers;

a floating piston biased upwardly by a spring captured between the floating piston and ends of the collet fingers;

equalizing vent ports in the first subassembly and the second subassembly operable to allow pressure to act on the floating piston; and

wherein the lower and upper subassemblies have a parting force less than a coiled tubing and coiled tubing injector limit at a first downhole pressure condition comprising an equalized pressure between an interior of the release tool and an exterior of the release tool and wherein the piston moves downwardly in response to a pressure condition comprising a pressure difference between the interior of the release tool and the exterior of the release tool to encircle the collet fingers and prevent the collet fingers from being pulled out of the corresponding groove of the upper subassembly and thereby provide a parting force greater than the coiled tubing and coiled tubing injector limit.

25. The downhole release tool of claim **24**, further comprising one or more shear pins coupling the first subassembly to the second subassembly.

26. A release tool, comprising:

a tool assembly operable to separate by a parting force of less than a coiled tubing and coiled tubing injector limit at a first downhole pressure condition, and to separate by a parting force of greater than the coiled tubing and coiled tubing injector limit at a second downhole pressure condition,

wherein the first downhole pressure condition comprises an equalized pressure between an interior of the release tool and an exterior of the release tool, and

wherein the second downhole pressure condition comprises a pressure difference between the interior of the release tool and the exterior of the release tool.

27. The release tool of claim **26**, wherein:

the second downhole pressure condition comprises a greater pressure in the interior of the release tool than about the exterior of the release tool.

28. A method for releasing tubing from a downhole tool, comprising:

terminating pumping of fluids downhole from the surface to disengage a release guard; and

pulling a tubing from the surface to separate the tubing from a downhole tool,

wherein the release guard is operable to inhibit separation of the tubing from the downhole tool by selectively changing a parting force from less than a coiled tubing and coiled tubing injector limit at a first downhole pressure condition comprising an equalized pressure between an interior of the downhole tool and an exterior of the downhole tool to a parting force greater than the coiled tubing and coiled tubing injector limit at a second downhole pressure condition comprising a pressure difference between the interior of the downhole tool and the exterior of the downhole tool.

29. The method of claim **28**, wherein the tubing comprises coiled tubing.

30. The method of claim **28**, wherein the release guard inhibits separation of the tubing from the downhole tool by preventing release movement of a connector coupling the tubing to the downhole tool.

31. A method for performing a downhole operation with a bottom hole assembly (BHA), comprising:

during pumping of fluids downhole for a downhole well operation, inhibiting release of a connector coupling a downhole tool to tubing for the downhole well operation in response to a pressure differential between an interior and an exterior of the connector; the pressure differential operable to change a parting force from less than a coiled tubing and coiled tubing injector limit at a first downhole pressure condition comprising an equalized pressure between an interior of the downhole tool and an exterior of the downhole tool to a parting force greater than the coiled tubing, and coiled tubing injector limit at a second downhole pressure condition comprising a pressure difference between the interior of the downhole tool and the exterior of the downhole tool; and

using the fluids to perform the downhole operation with the downhole tool.

32. The method of claim **31**, wherein the downhole well operation comprises a fracture operation.

* * * * *