US007510575B2

(12) **United States Patent**
Spenser et al.

(10) **Patent No.: US 7,510,575 B2**
(45) **Date of Patent: *Mar. 31, 2009**

(54) **IMPLANTABLE PROSTHETIC VALVE**

(75) Inventors: **Benjamin Spenser**, Caesarea (IL); **Netanel Benichu**, Nir Etzion (IL); **Assaf Bash**, Givat Ada (IL); **Avraham Zakai**, Zichron Yaacov (IL)

(73) Assignee: **Edwards Lifesciences Corporation**, Irvine, CA (US)

(*) Notice: Subject to any disclaimer, the term of this patent is extended or adjusted under 35 U.S.C. 154(b) by 404 days.

This patent is subject to a terminal disclaimer.

(21) Appl. No.: **10/637,882**

(22) Filed: **Aug. 8, 2003**

(65) **Prior Publication Data**

US 2004/0039436 A1 Feb. 26, 2004

Related U.S. Application Data

(60) Division of application No. 10/270,252, filed on Oct. 11, 2002, now Pat. No. 6,730,118, which is a continuation-in-part of application No. 09/975,750, filed on Oct. 11, 2001, now Pat. No. 6,893,460.

(51) **Int. Cl.**
A61F 2/24 (2006.01)

(52) **U.S. Cl.** **623/2.18**

(58) **Field of Classification Search** 623/1.1–1.13, 623/1.15, 1.24, 1.26, 1.34, 2.1–2.15, 2.17, 623/2.18

See application file for complete search history.

(56) **References Cited**

U.S. PATENT DOCUMENTS

3,409,013 A 11/1968 Berry

(Continued)

FOREIGN PATENT DOCUMENTS

DE 2246526 3/1973

(Continued)

OTHER PUBLICATIONS

Andersen, et al., Transluminal implantation of artificial heart valves. Description of a new expandable aortic valve and initial results with implantation by catheter technique in closed chest pigs. European Heart Journal (1992), 13, 704-708.

Primary Examiner—William H. Matthews
(74) *Attorney, Agent, or Firm*—David L. Hauser; Guy Cumberbatch

(57) **ABSTRACT**

A valve prosthesis device is disclosed suitable for implantation in body ducts. The device comprises a support stent, comprised of a deployable construction adapted to be initially crimped in a narrow configuration suitable for catheterization through the body duct to a target location and adapted to be deployed by exerting substantially radial forces from within by means of a deployment device to a deployed state in the target location, and a valve assembly comprising a flexible conduit having an inlet end and an outlet, made of pliant material attached to the support beams providing collapsible slack portions of the conduit at the outlet. The support stent is provided with a plurality of longitudinally rigid support beams of fixed length. When flow is allowed to pass through the valve prosthesis device from the inlet to the outlet, the valve assembly is kept in an open position, whereas a reverse flow is prevented as the collapsible slack portions of the valve assembly collapse inwardly providing blockage to the reverse flow.

31 Claims, 53 Drawing Sheets

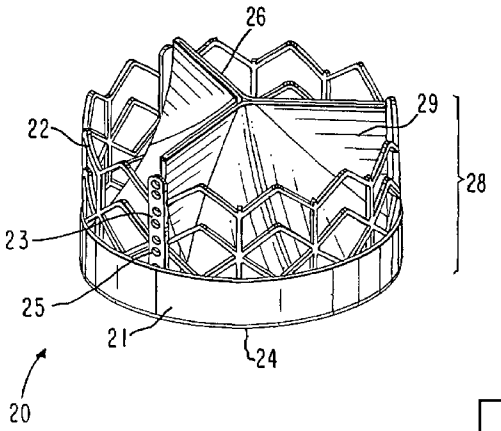

Edwards v. Aortic Innovations
U.S. Patent 11,337,834
Edwards Ex. 1010

U.S. PATENT DOCUMENTS

3,548,417	A	12/1970	Kischer	
3,587,115	A	6/1971	Shiley	
3,657,744	A	4/1972	Ersek	
3,671,979	A	6/1972	Moulopoulos	
3,714,671	A	2/1973	Edwards et al.	
3,755,823	A	9/1973	Hancock	
4,035,849	A	7/1977	Angell et al.	
4,056,854	A	11/1977	Boretos et al.	
4,106,129	A	8/1978	Carpentier et al.	
4,222,126	A	9/1980	Boretos et al.	
4,265,694	A	5/1981	Boretos et al.	
4,297,749	A	11/1981	Davis et al.	
4,339,831	A	7/1982	Johnson	
4,343,048	A	8/1982	Ross et al.	
4,345,340	A *	8/1982	Rosen	623/2.19
4,373,216	A	2/1983	Klawitter	
4,406,022	A	9/1983	Roy	
4,470,157	A	9/1984	Love	
4,535,483	A	8/1985	Klawitter et al.	
4,574,803	A	3/1986	Storz	
4,592,340	A	6/1986	Boyles	
4,605,407	A	8/1986	Black et al.	
4,612,011	A	9/1986	Kautzky	
4,643,732	A	2/1987	Pietsch et al.	
4,655,771	A	4/1987	Wallsten	
4,692,164	A	9/1987	Dzemeshkevich et al.	
4,733,665	A	3/1988	Palmaz	
4,759,758	A	7/1988	Gabbay	
4,777,951	A	10/1988	Cribier et al.	
4,787,899	A	11/1988	Lazarus	
4,787,901	A	11/1988	Baykut	
4,796,629	A	1/1989	Grayzel	
4,829,990	A	5/1989	Thuroff et al.	
4,851,001	A	7/1989	Taheri	
4,856,516	A	8/1989	Hillstead	
4,878,495	A	11/1989	Grayzel	
4,878,906	A	11/1989	Lindemann et al.	
4,883,458	A	11/1989	Shiber	
4,922,905	A	5/1990	Strecker	
4,966,604	A	10/1990	Reiss	
4,979,939	A	12/1990	Shiber	
4,986,830	A	1/1991	Owens et al.	
4,994,077	A	2/1991	Dobben	
5,007,896	A	4/1991	Shiber	
5,026,366	A	6/1991	Leckrone	
5,032,128	A	7/1991	Alonso	
5,037,434	A	8/1991	Lane	
5,047,041	A	9/1991	Sammuels	
5,080,668	A	1/1992	Bolz et al.	
5,085,635	A	2/1992	Cragg	
5,089,015	A	2/1992	Ross	
5,152,771	A	10/1992	Sabbaghian et al.	
5,163,953	A	11/1992	Vince	
5,167,628	A	12/1992	Boyles	
5,282,847	A	2/1994	Trescony et al.	
5,295,958	A	3/1994	Shturman	
5,332,402	A	7/1994	Teitelbaum	
5,360,444	A	11/1994	Kusuhara	
5,370,685	A	12/1994	Stevens	
5,397,351	A	3/1995	Pavcnik et al.	
5,411,552	A	5/1995	Andersen et al.	
5,443,446	A	8/1995	Shturman	
5,480,424	A	1/1996	Cox	
5,500,014	A	3/1996	Quijano et al.	
5,545,209	A	8/1996	Roberts et al.	
5,545,214	A	8/1996	Stevens	
5,549,665	A	8/1996	Vesely	
5,554,185	A	9/1996	Block et al.	
5,571,175	A	11/1996	Vanney et al.	
5,591,185	A	1/1997	Kilmer et al.	
5,591,195	A	1/1997	Taheri et al.	
5,607,464	A	3/1997	Trescony et al.	
5,609,626	A	3/1997	Quijano et al.	
5,716,417	A	2/1998	Girard et al.	
5,728,068	A	3/1998	Leone et al.	
5,749,890	A	5/1998	Shaknovich	
5,756,476	A	5/1998	Epstein	
5,769,812	A	6/1998	Stevens et al.	
5,840,081	A	11/1998	Andersen et al.	
5,855,597	A	1/1999	Jayaraman	
5,855,601	A *	1/1999	Bessler et al.	623/2.38
5,855,602	A	1/1999	Angell	
5,925,063	A	7/1999	Khosravi	
5,957,949	A	9/1999	Leonhardt et al.	
6,027,525	A	2/2000	Suh et al.	
6,132,473	A	10/2000	Williams et al.	
6,171,335	B1 *	1/2001	Wheatley et al.	623/2.17
6,299,637	B1	10/2001	Shaolian	
6,440,164	B1	8/2002	Di Matteo et al.	
6,454,799	B1	9/2002	Schreck	
6,458,153	B1	10/2002	Bailey et al.	
6,468,660	B2	10/2002	Ogle	
6,482,228	B1	11/2002	Norred	
6,488,704	B1	12/2002	Connelly et al.	
6,730,118	B2	5/2004	Spenser et al.	
6,893,460	B2 *	5/2005	Spenser et al.	623/2.14

FOREIGN PATENT DOCUMENTS

DE	19532846	3/1997
DE	19546692	6/1997
EP	0103546	3/1984
EP	0144167	6/1985
EP	0597967	12/1994
EP	0850607	7/1998
FR	2788217	1/1999
GB	2056023	3/1981
SU	1271508	11/1986
SU	1371700	2/1988
WO	WO 91/17720	11/1991
WO	WO 92/17118	10/1992
WO	WO 93/01768	2/1993
WO	WO 99/33414	7/1999
WO	WO 99/40964	8/1999
WO	WO 99/47075	9/1999
WO	WO 00/41652	7/2000
WO	WO 00/47139	8/2000

* cited by examiner

FIG. 1

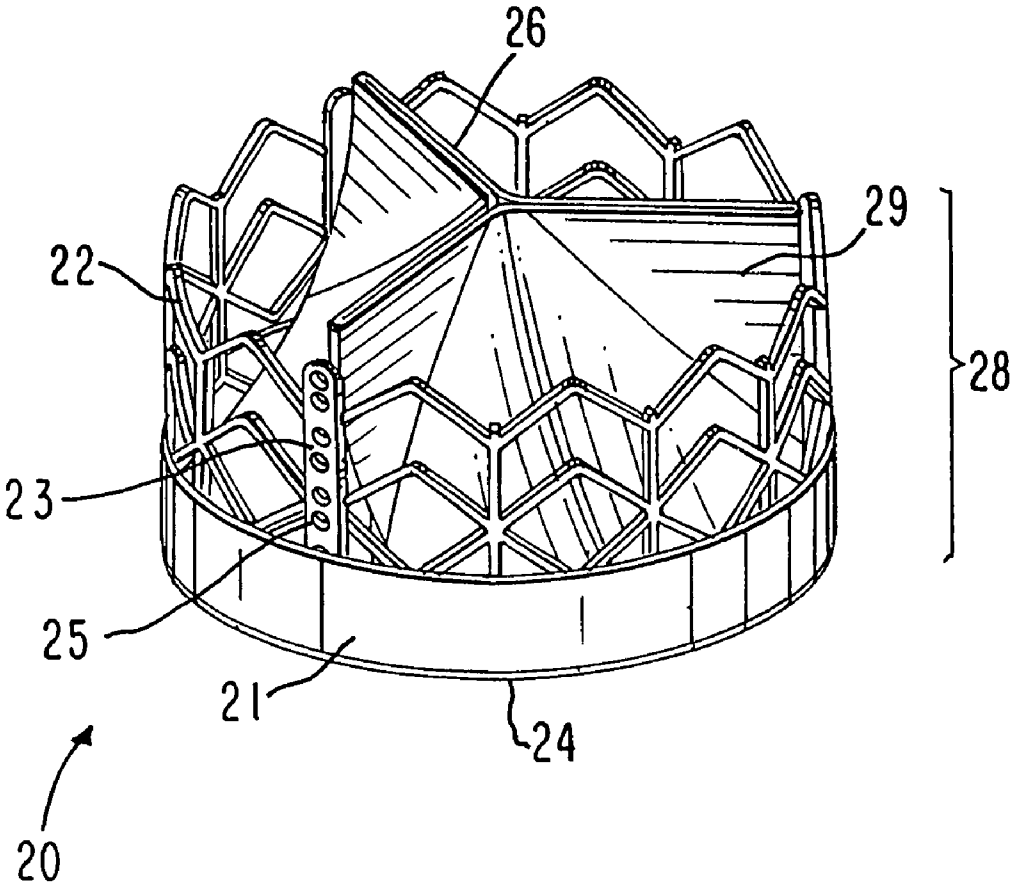

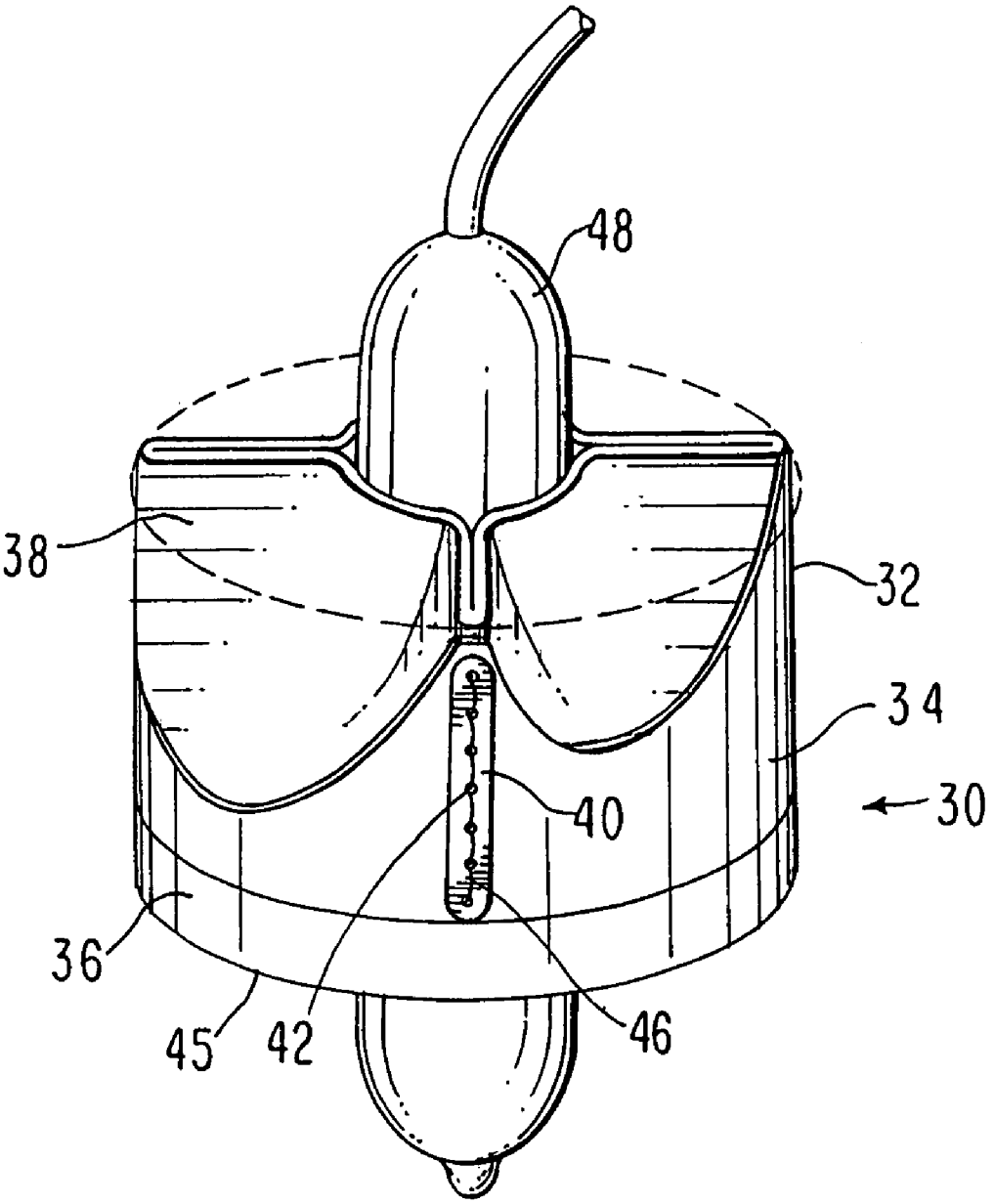

FIG. 2

FIG. 3

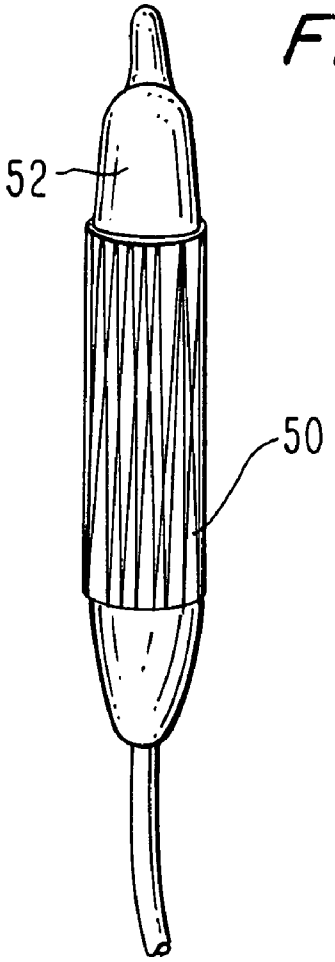

FIG. 4

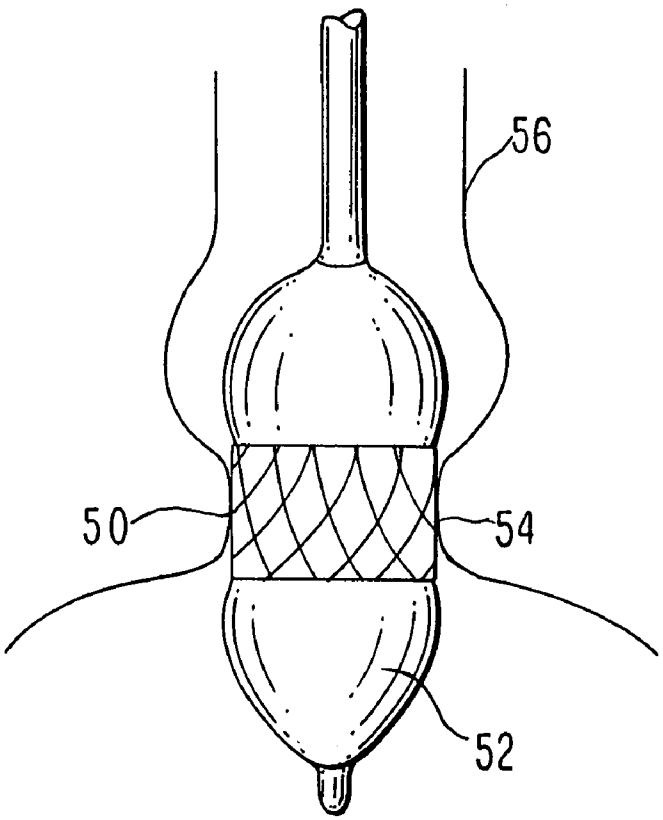

FIG. 5

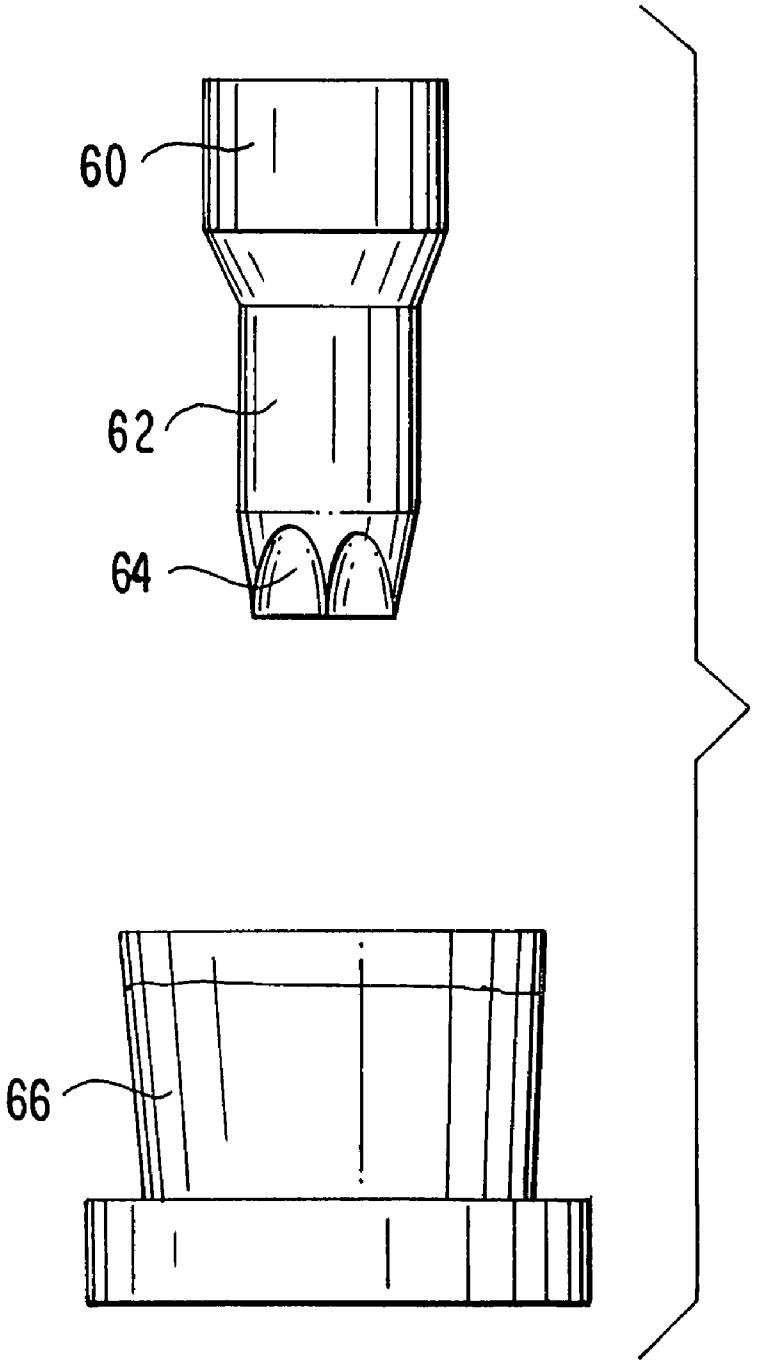

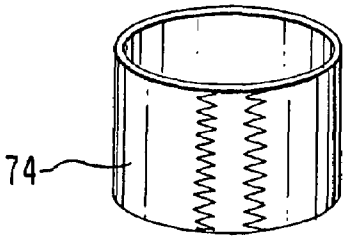

FIG.6a

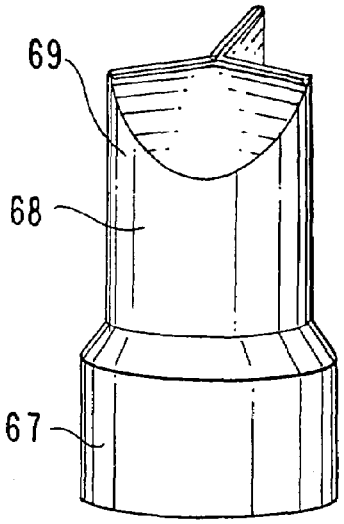

FIG.6b

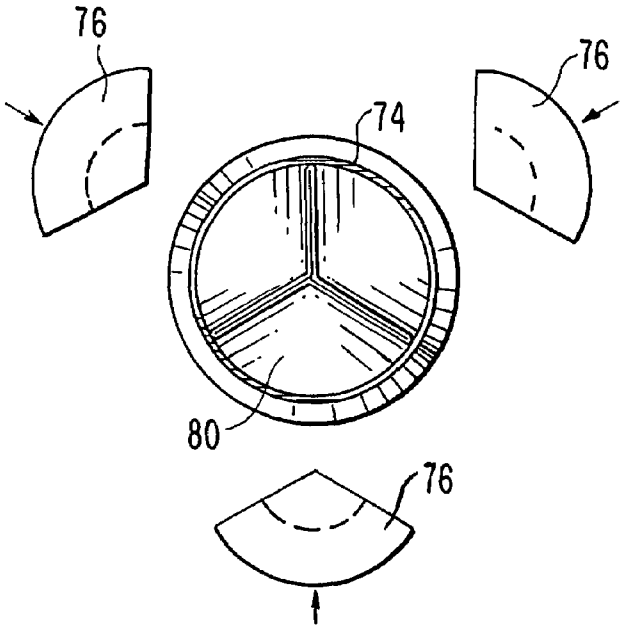

FIG.6c

FIG.6d

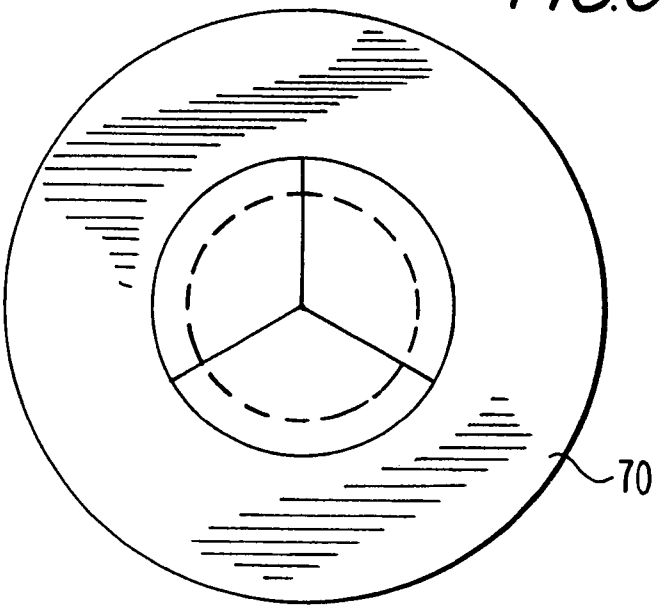

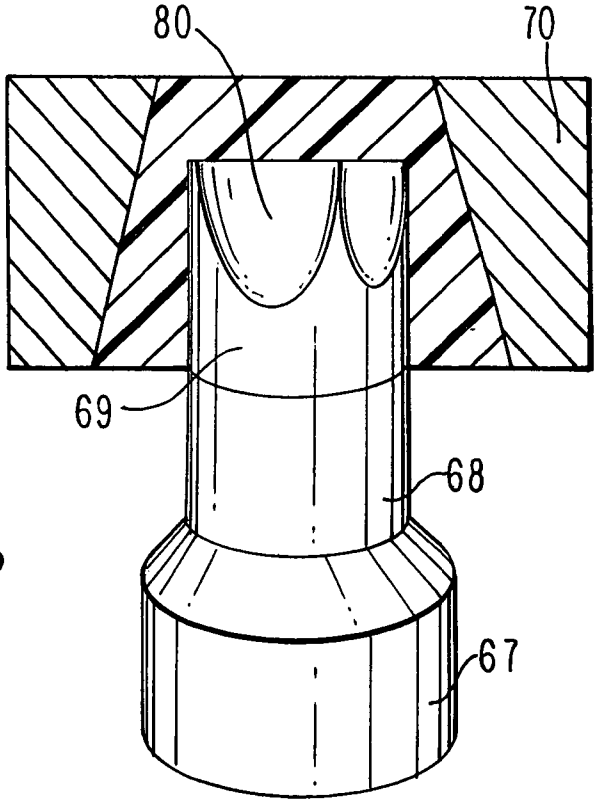

FIG.6e

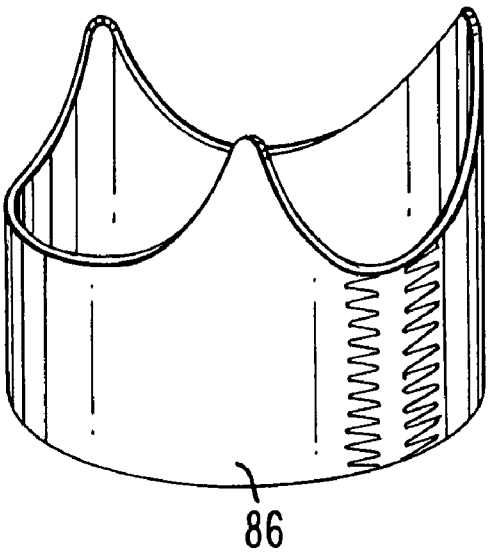

FIG.7a

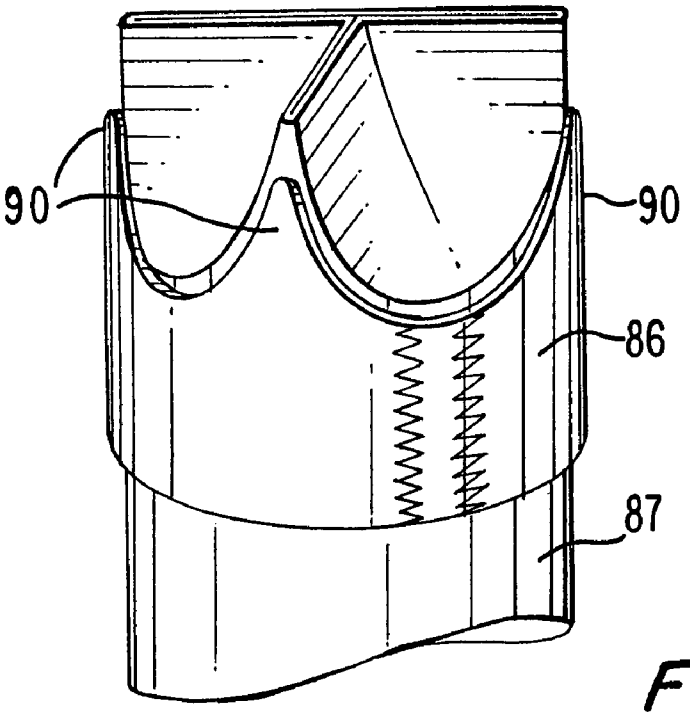

FIG.7b

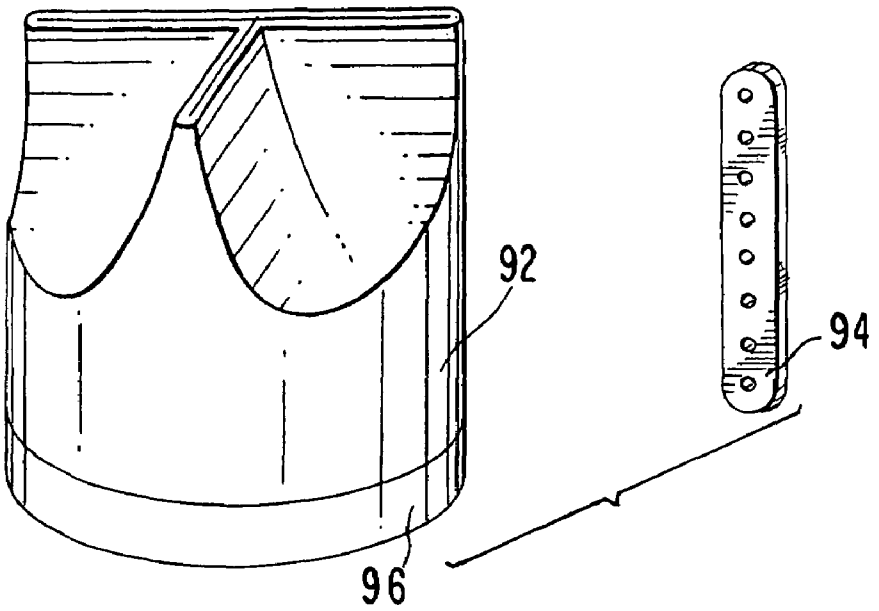

FIG. 8a

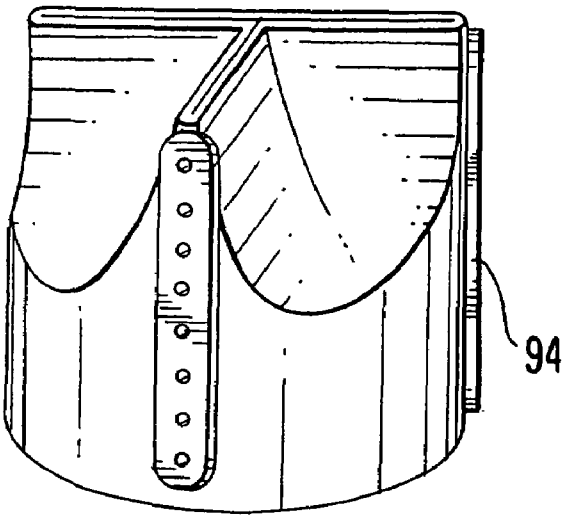

FIG. 8b

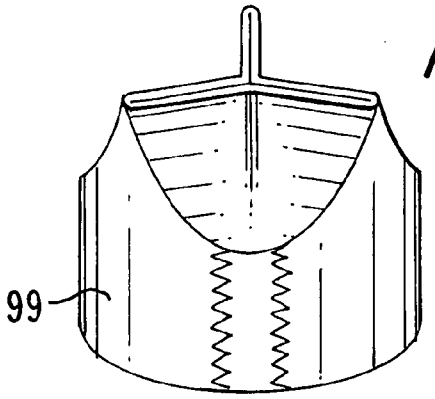

FIG. 9

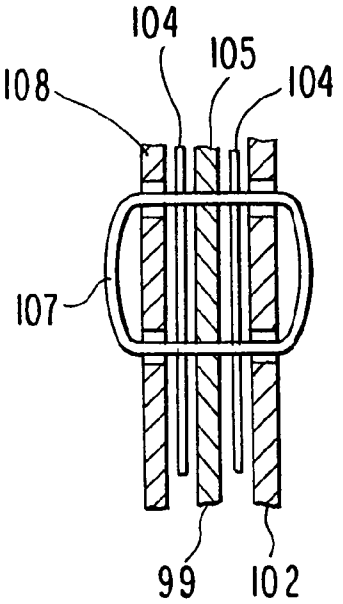

FIG. 9b

FIG. 9a

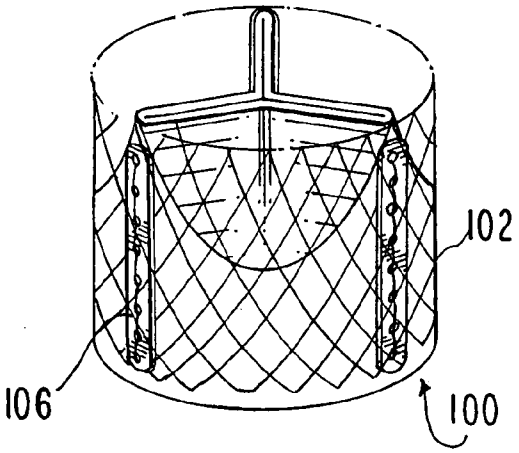

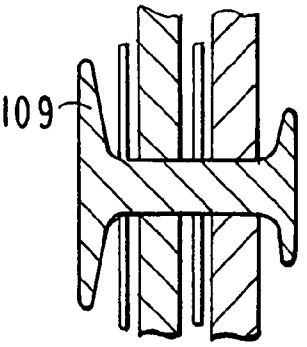

FIG. 9c

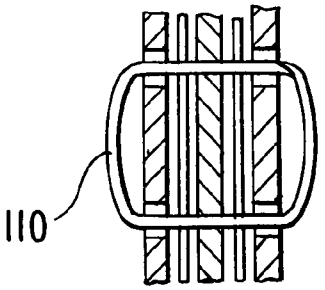

FIG. 9d

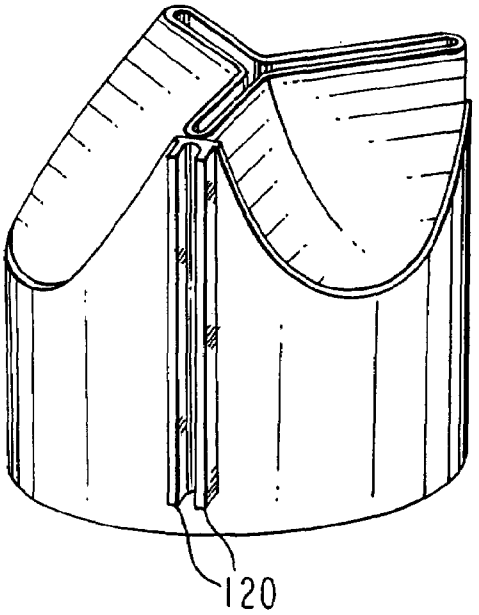

FIG. 9e

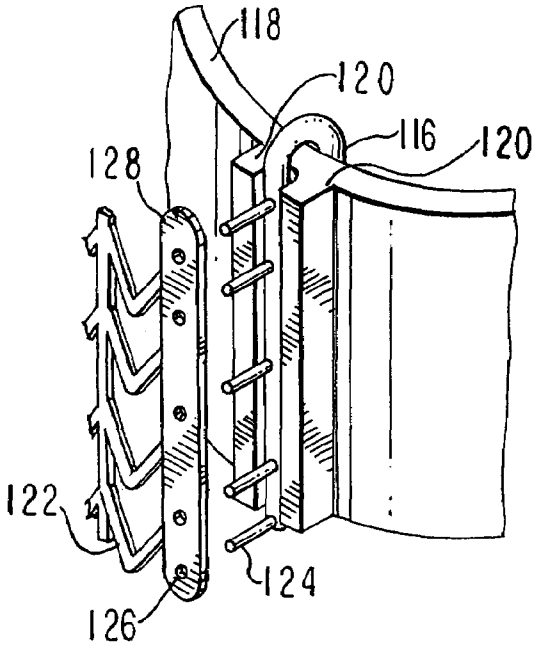

FIG. 9f

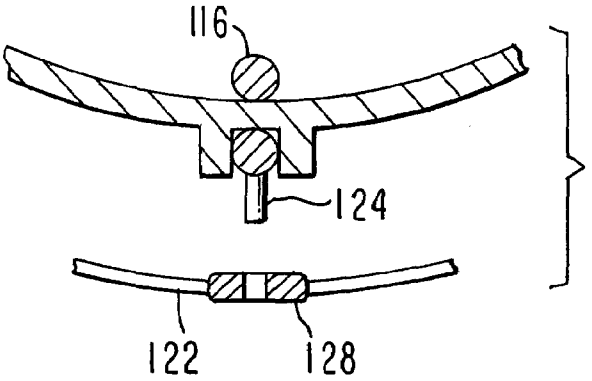

FIG. 9g

FIG.9h

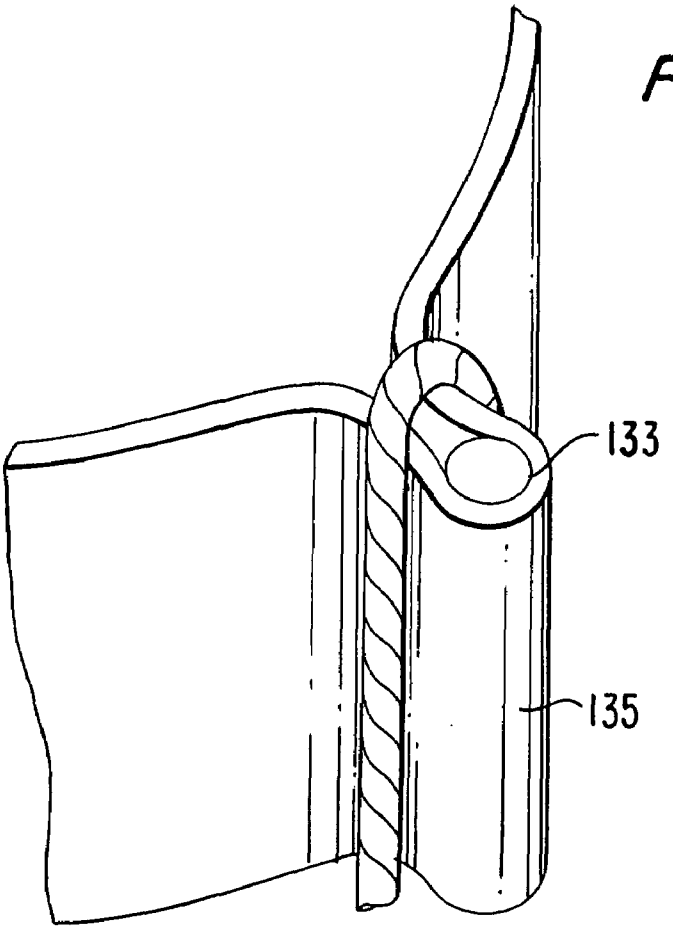

FIG.9i

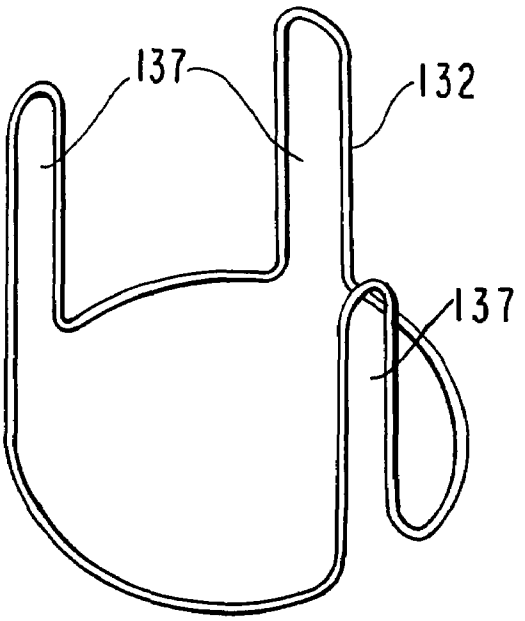

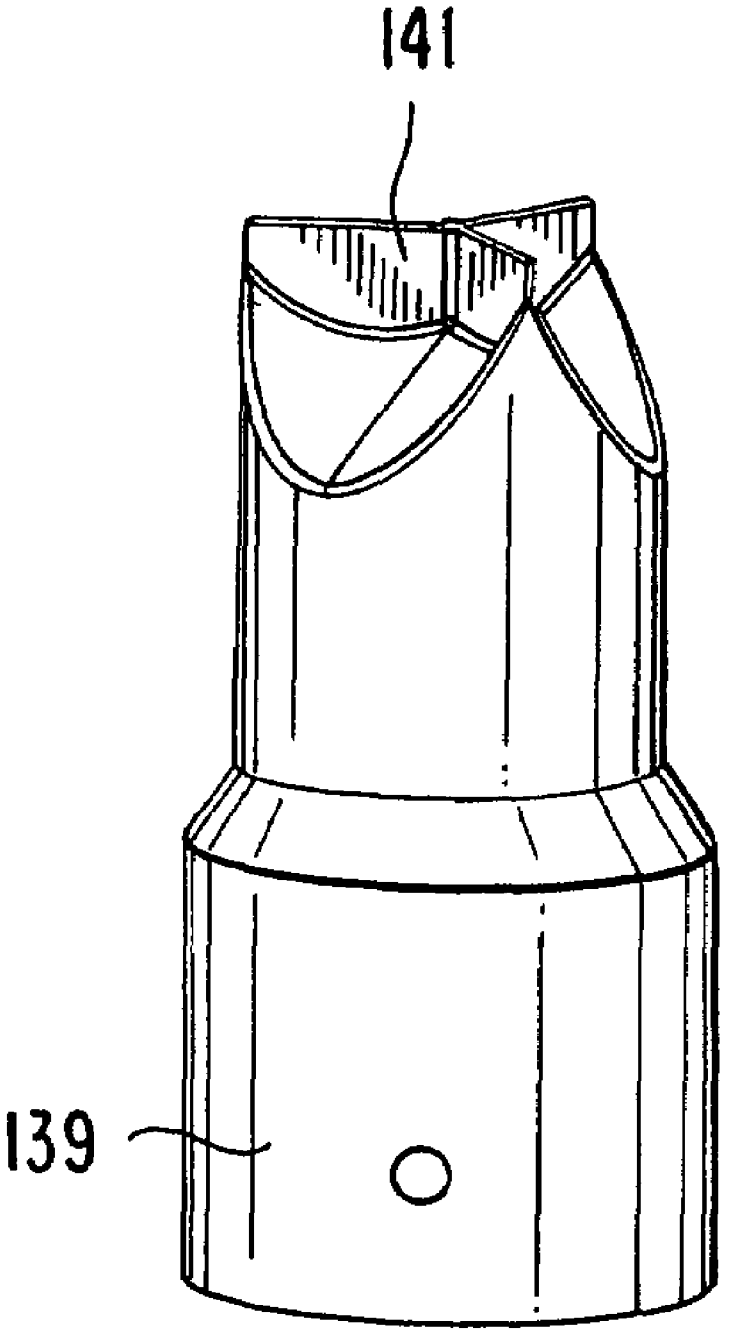

FIG.10

FIG. 11a

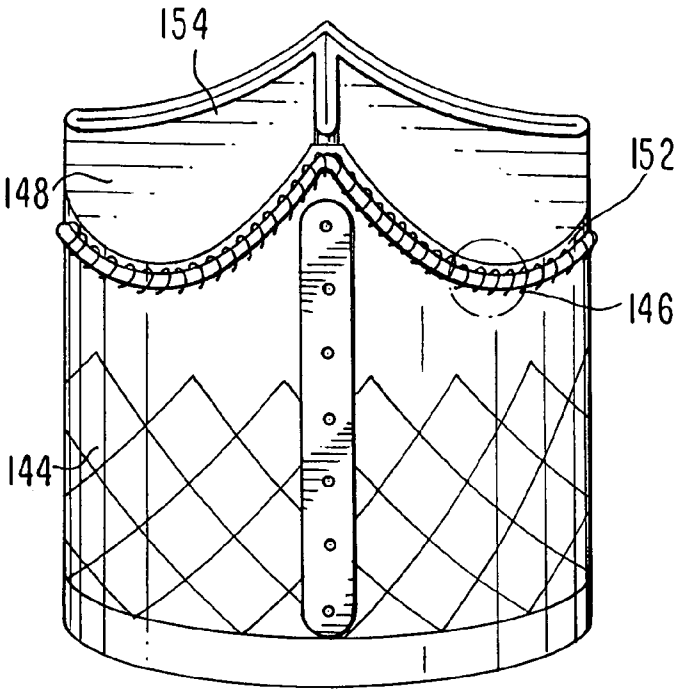

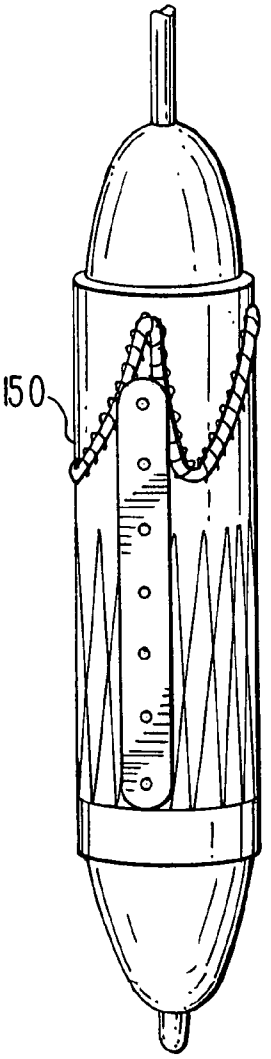

FIG. 11b

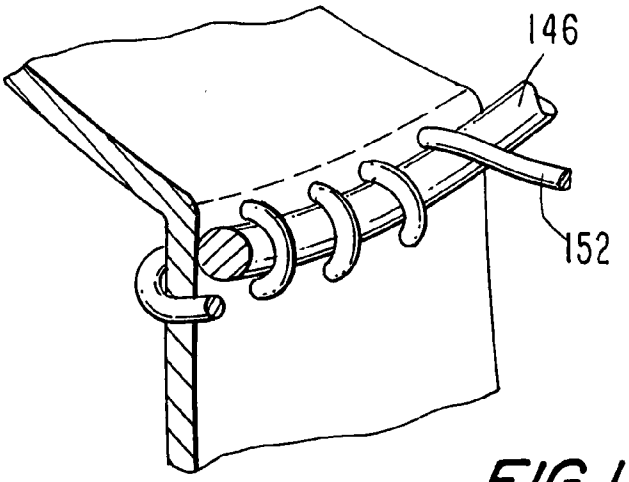

FIG. 11c

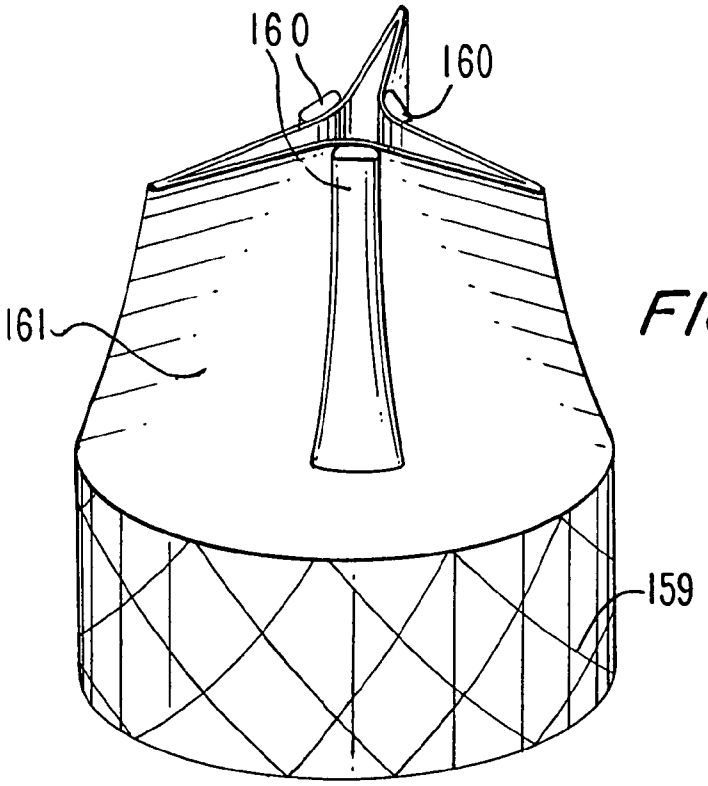

FIG. 12a

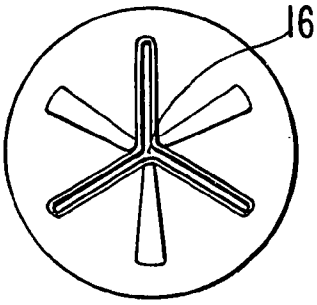

FIG. 12b

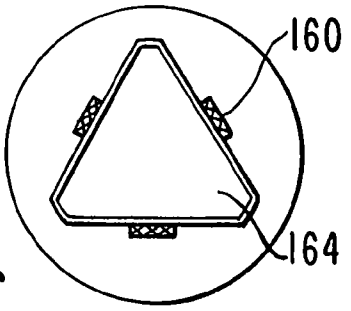

FIG. 12c

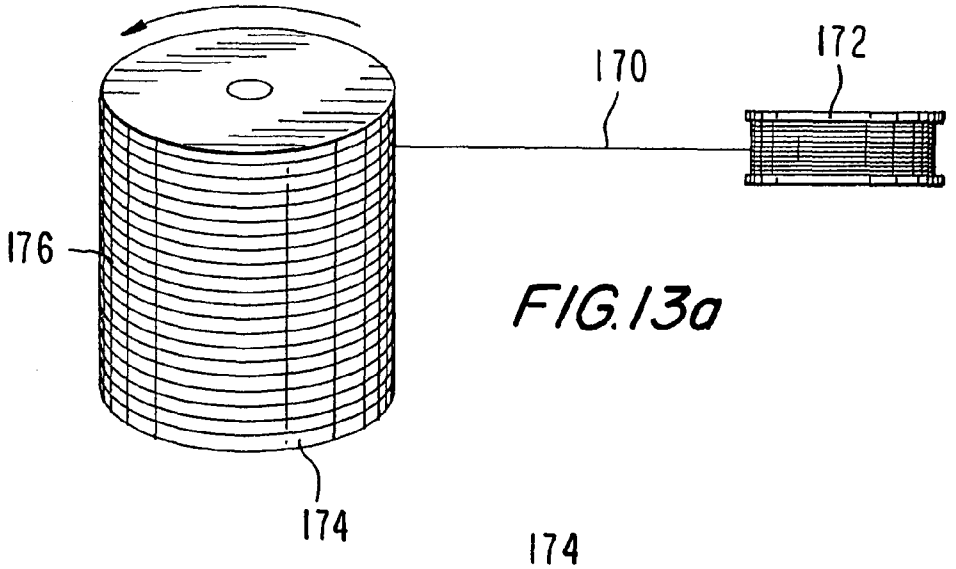

FIG.13a

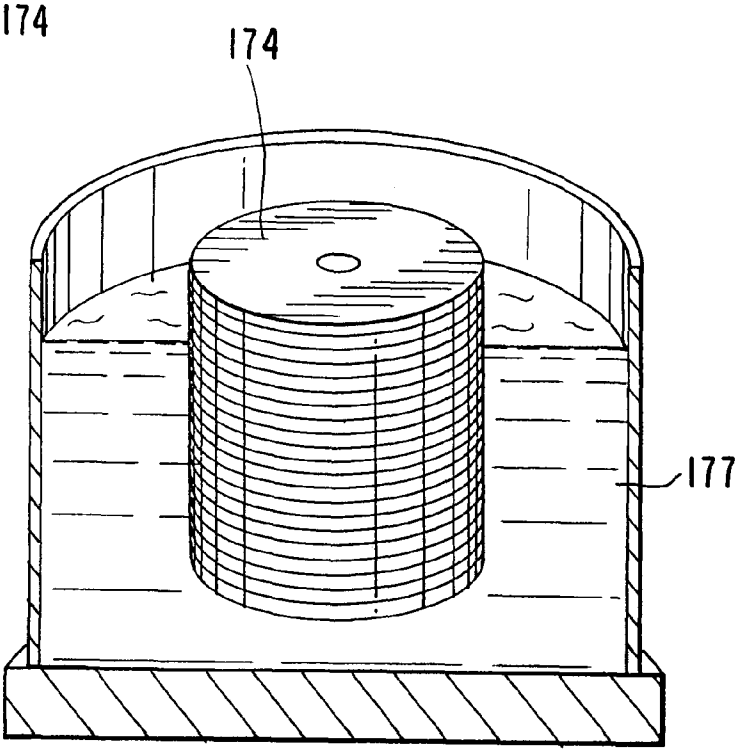

FIG.13b

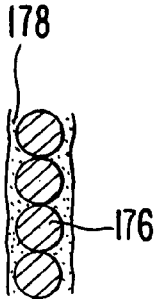

FIG.13c

FIG.14

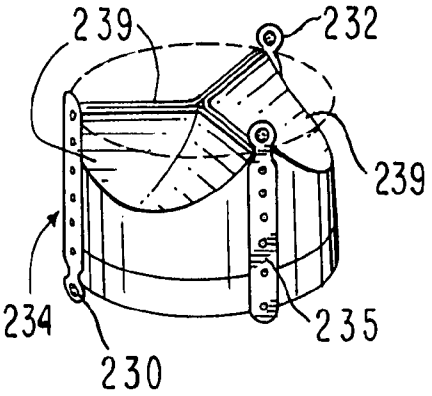

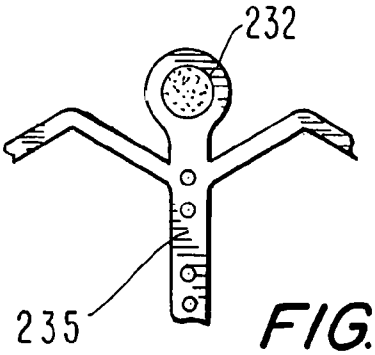

FIG.14a

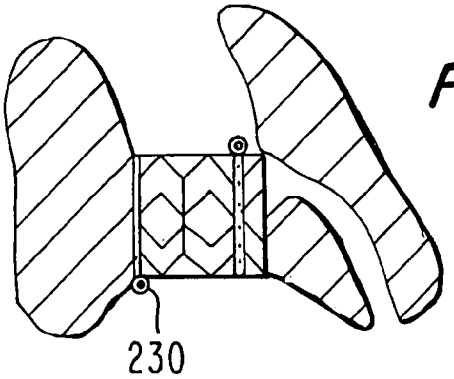

FIG.14b

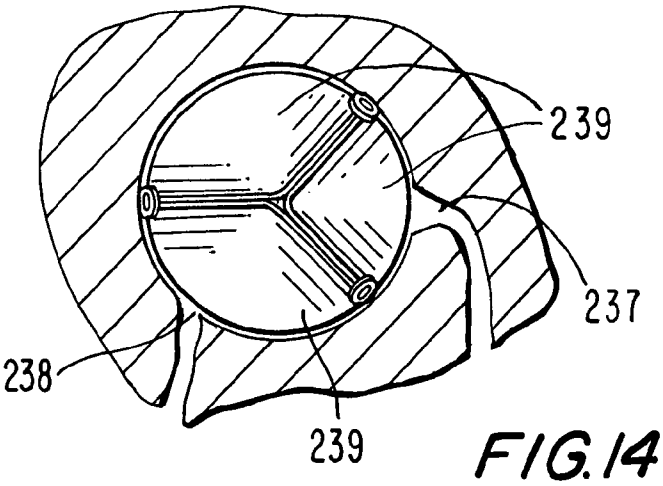

FIG.14c

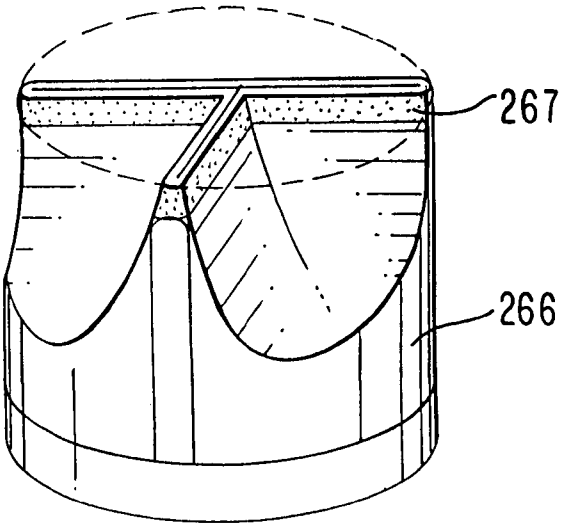

FIG. 15a

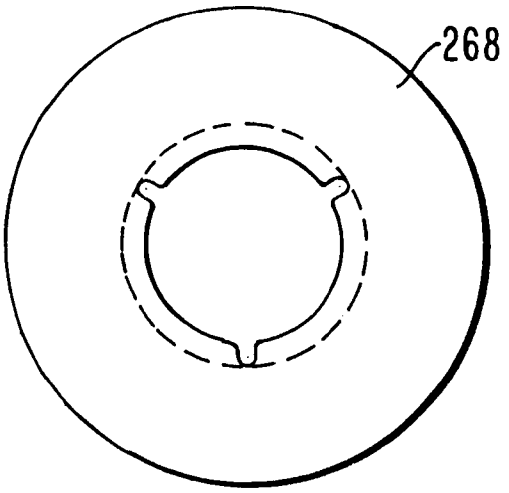

FIG. 15b

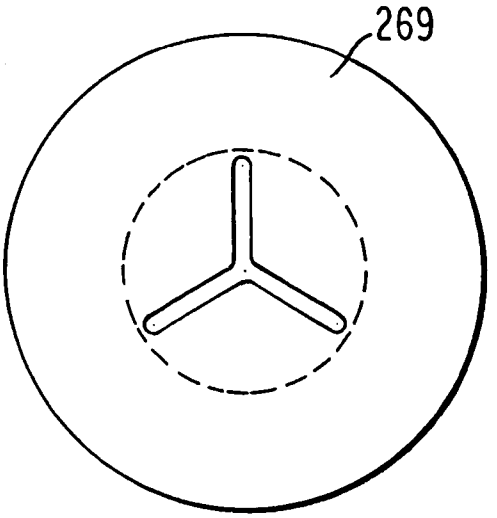

FIG. 15c

FIG. 16a

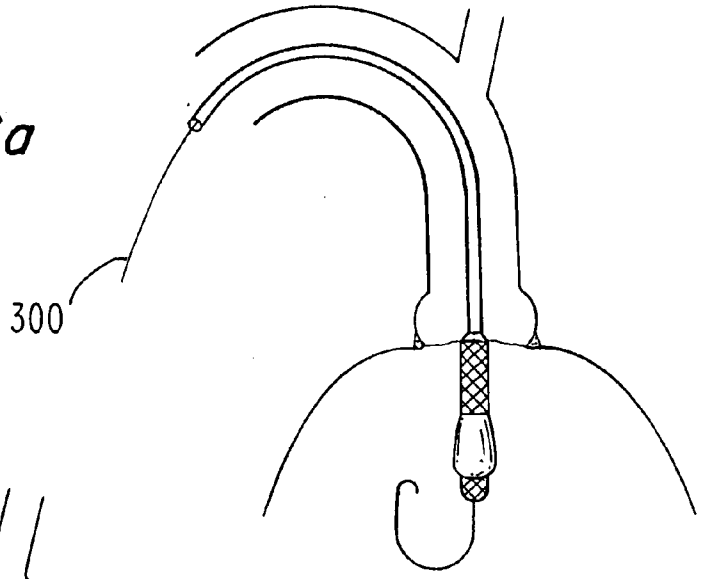

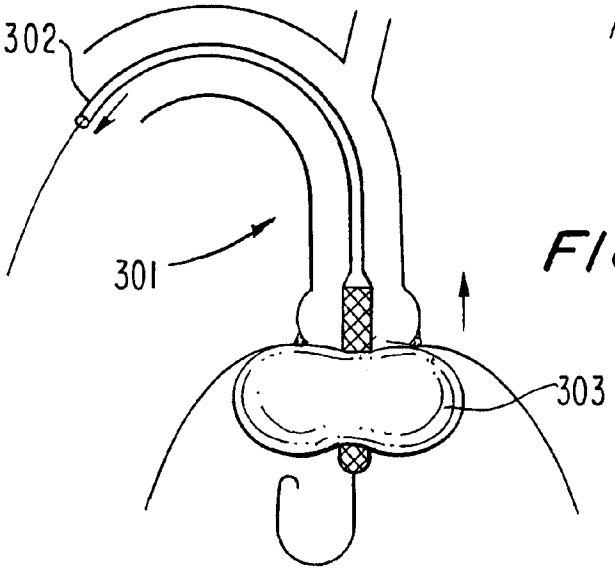

FIG. 16b

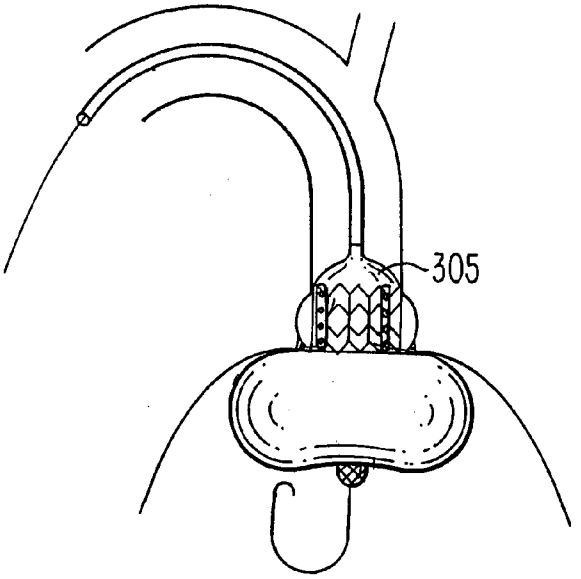

FIG. 16c

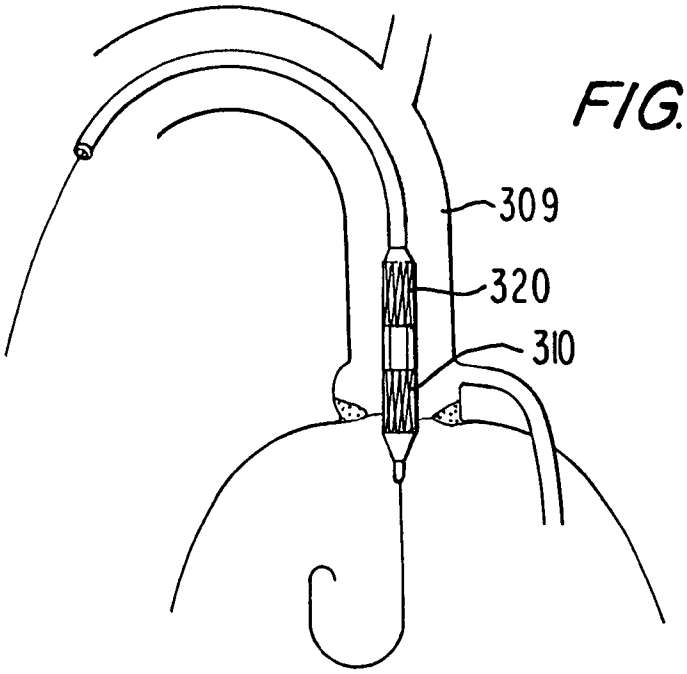

FIG.17a

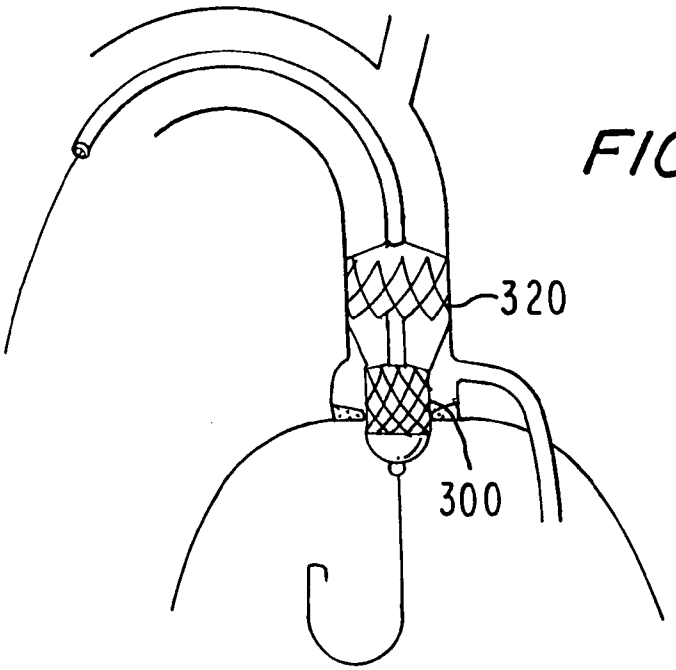

FIG.17b

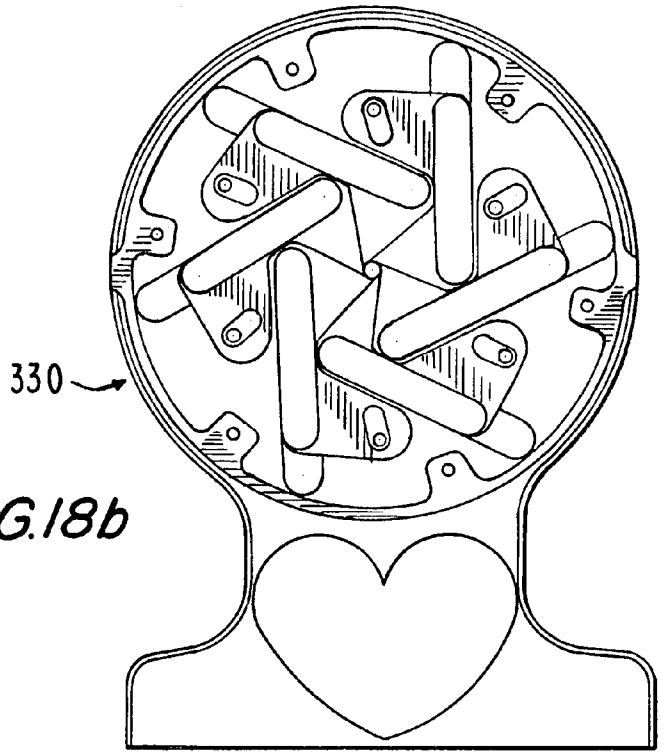

FIG.18b

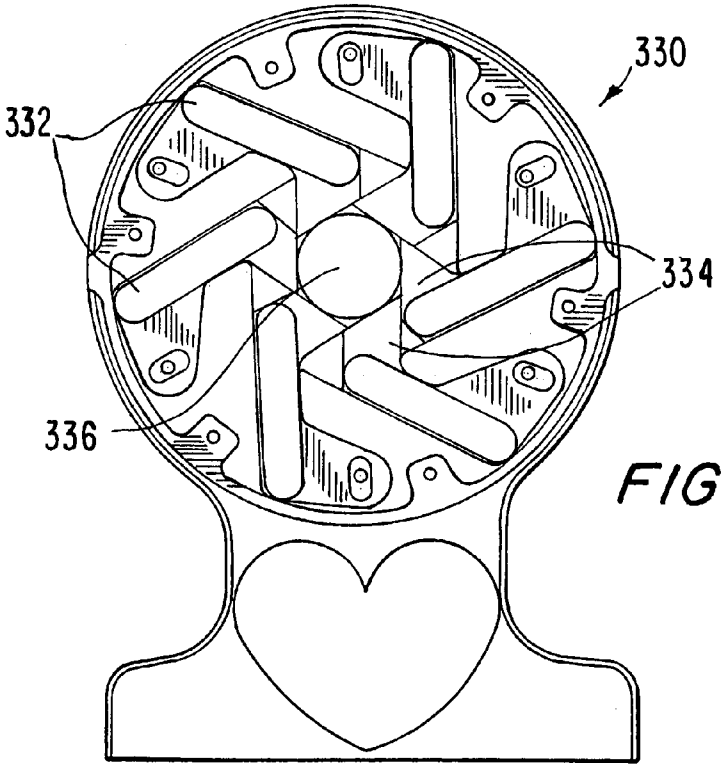

FIG 18a

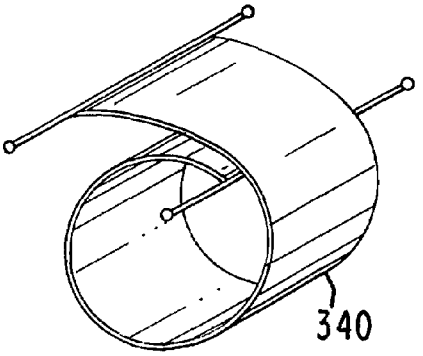

FIG.19a

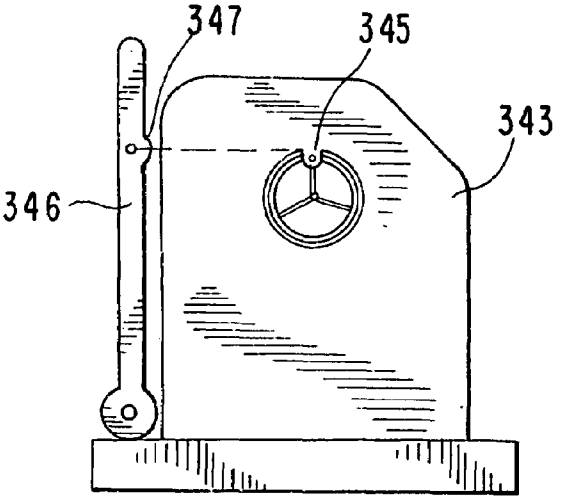

FIG.19b

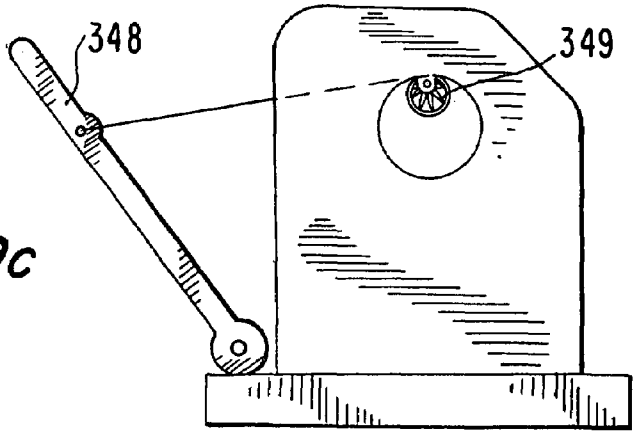

FIG.19c

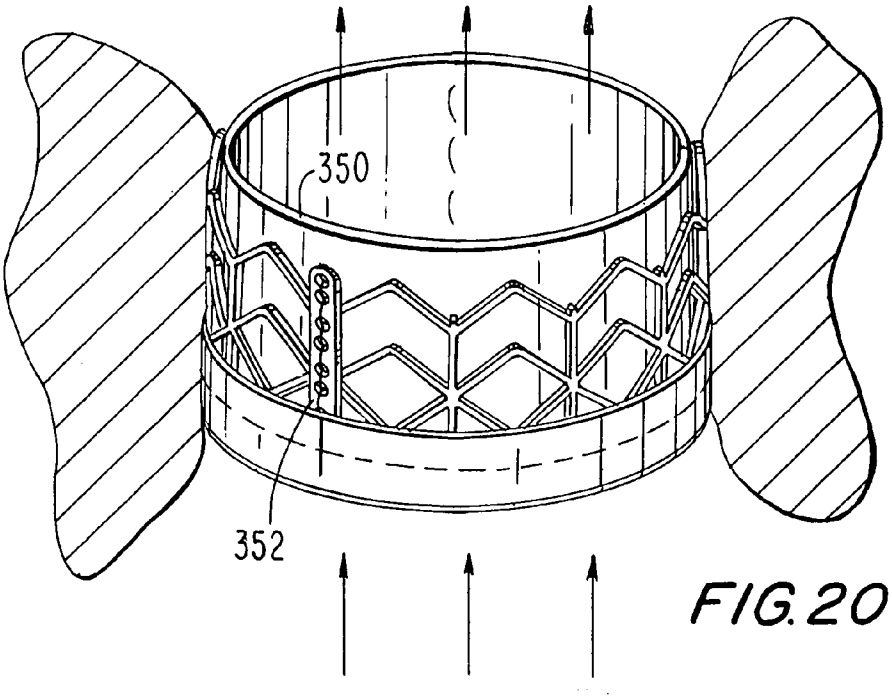

FIG. 20a

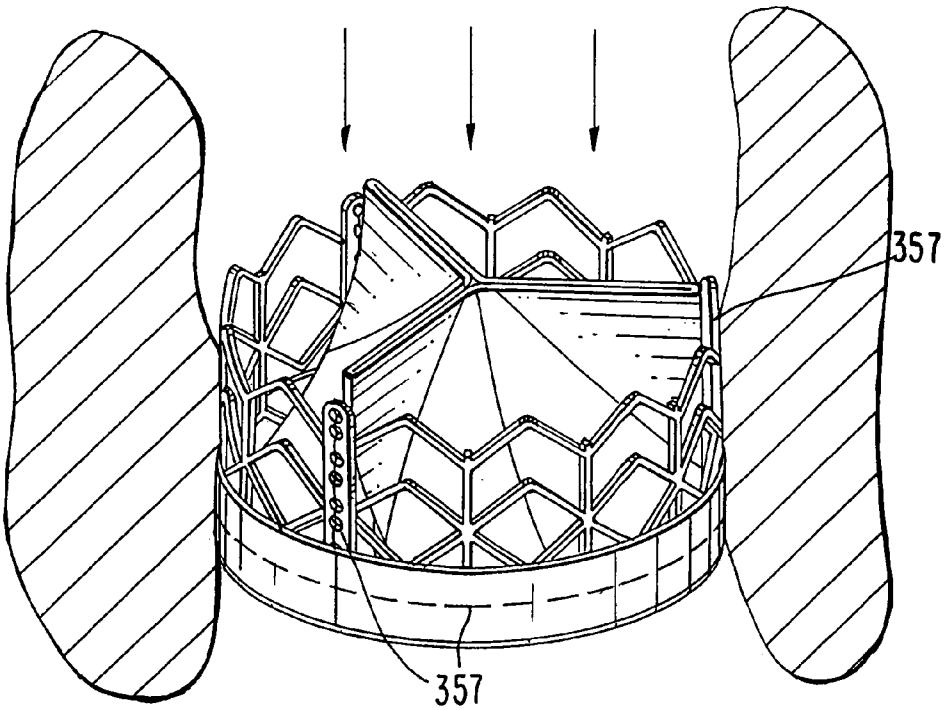

FIG. 20b

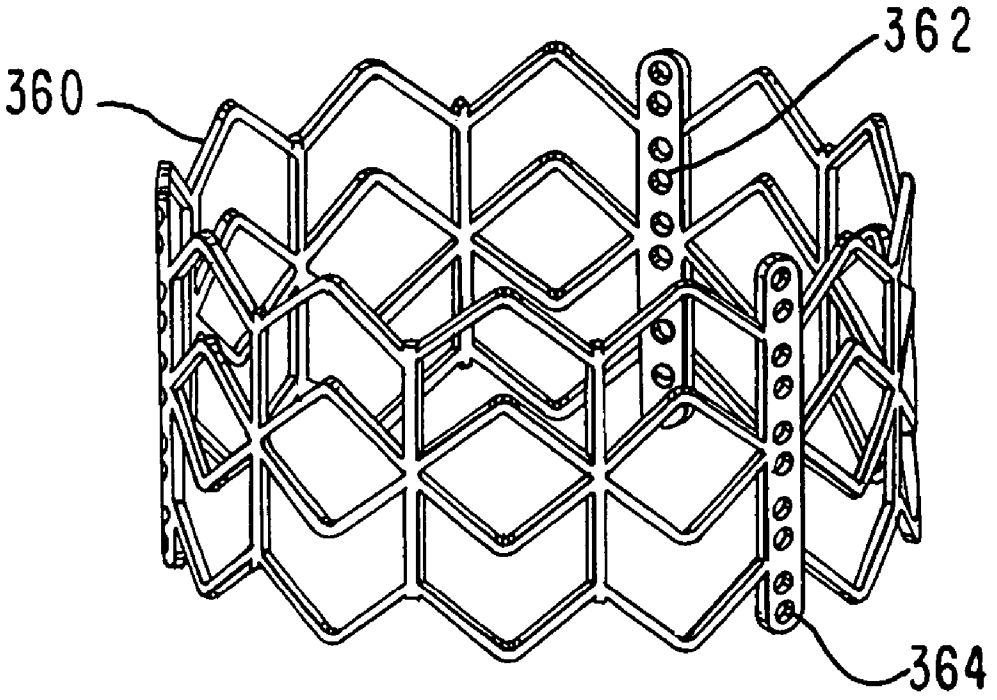

FIG. 21

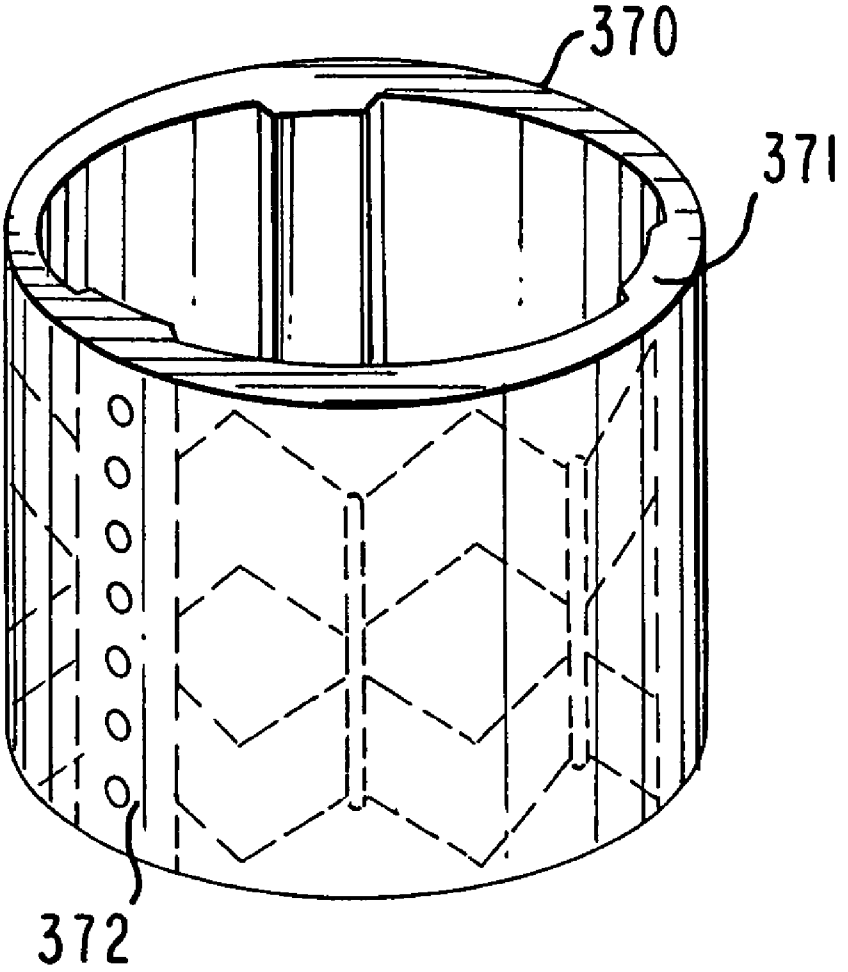

FIG.22

FIG. 23a

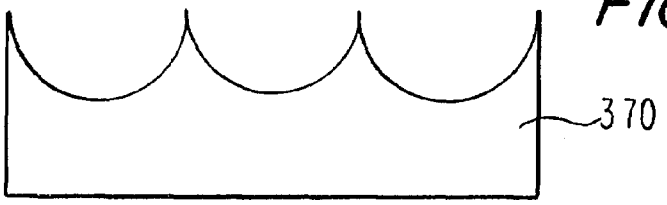

FIG. 23b

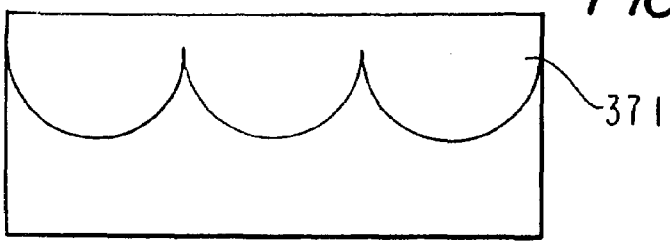

FIG. 23c

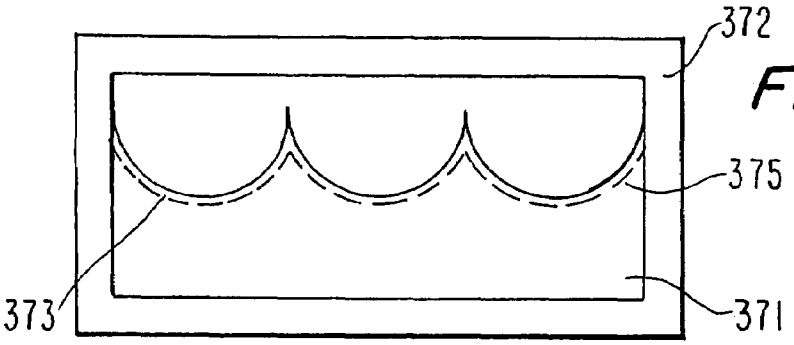

FIG. 23d

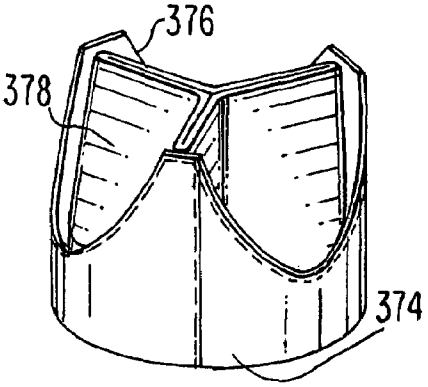

FIG. 23e

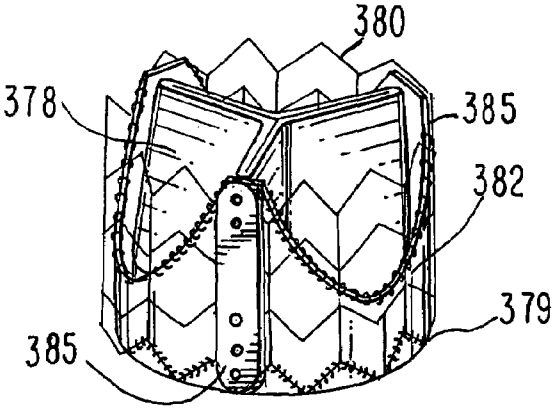

FIG. 24a

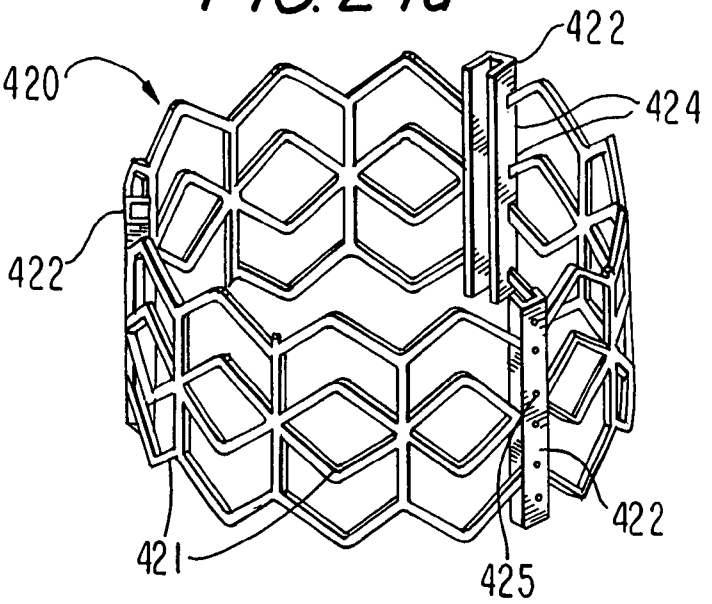

FIG. 24c

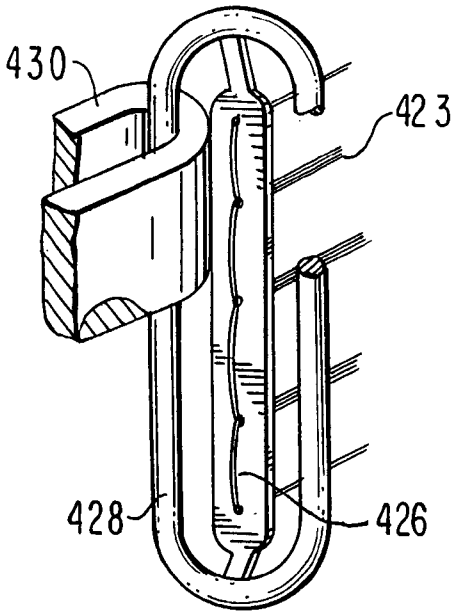

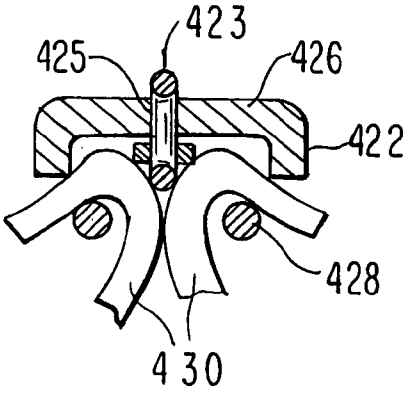

FIG. 24b

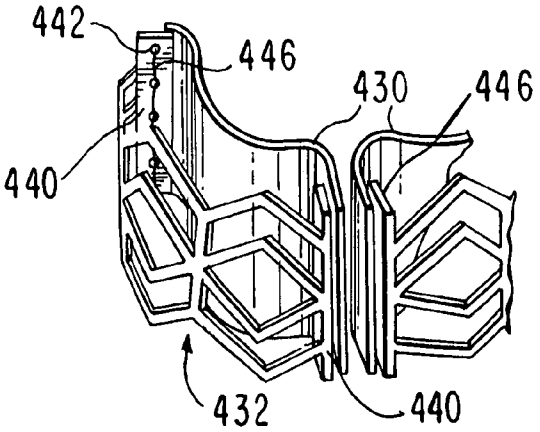

FIG.25a

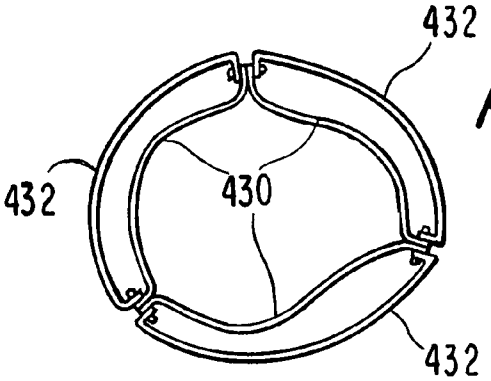

FIG. 25b

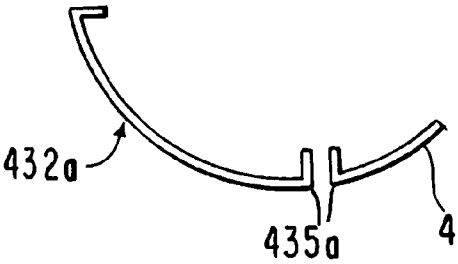

FIG.25c

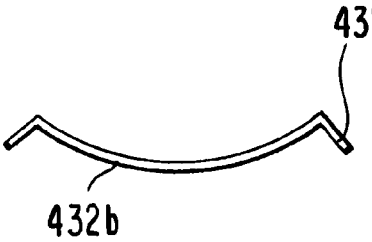

FIG.25d

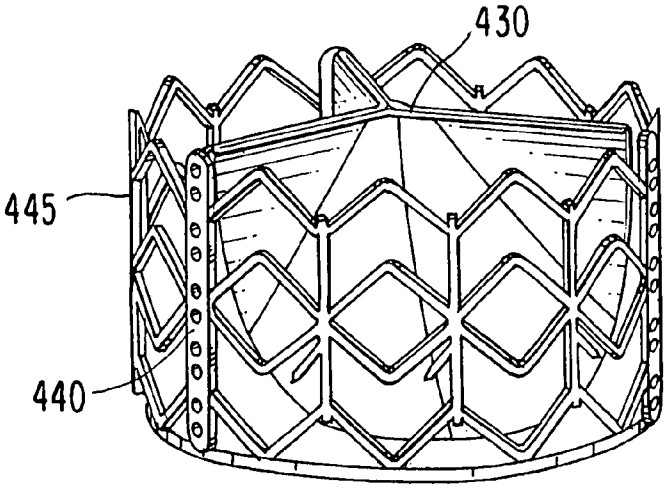

FIG.26a

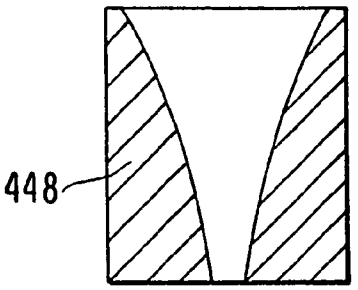

FIG.26b

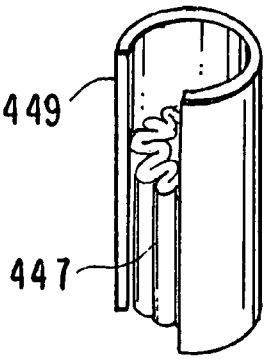

FIG.26c

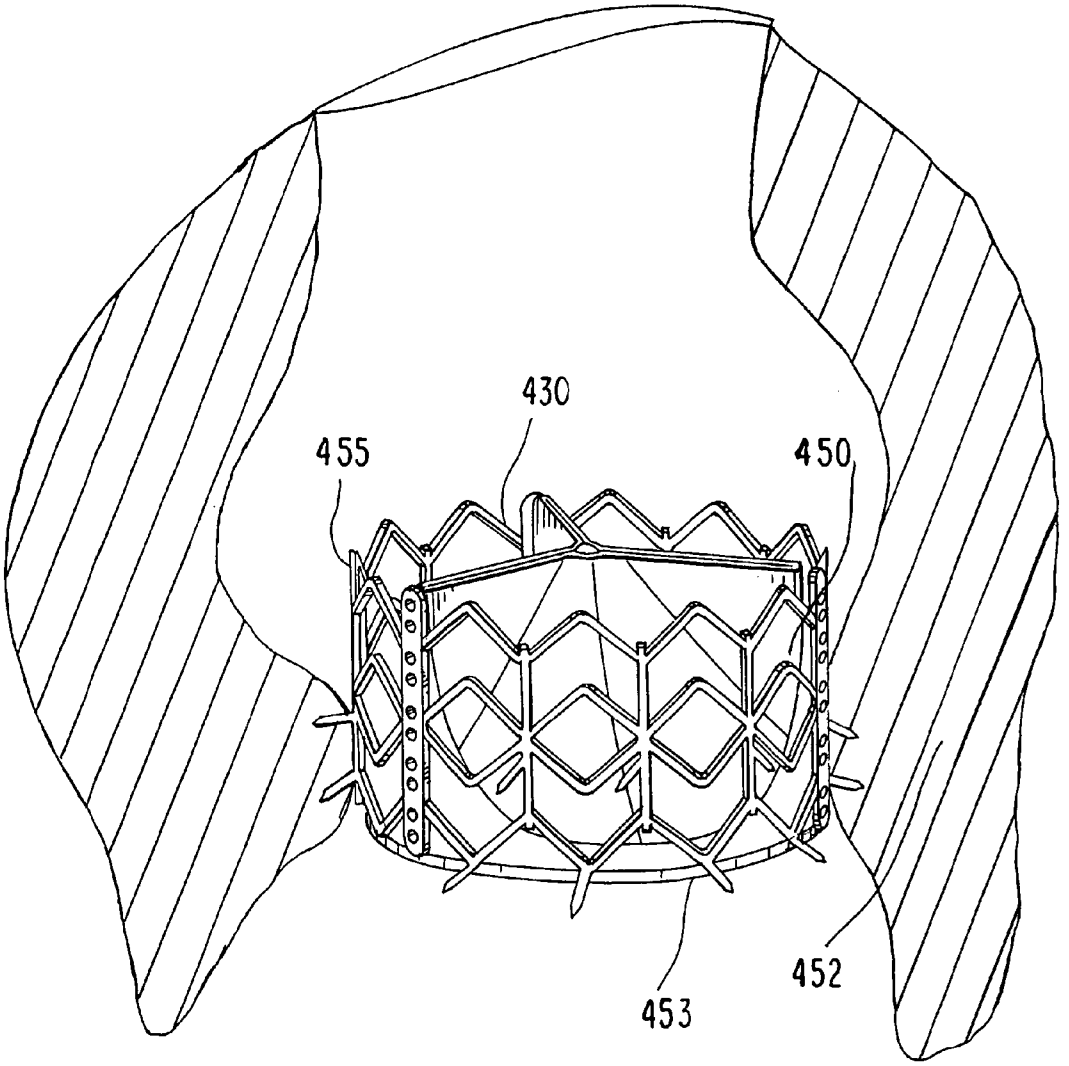

FIG. 27

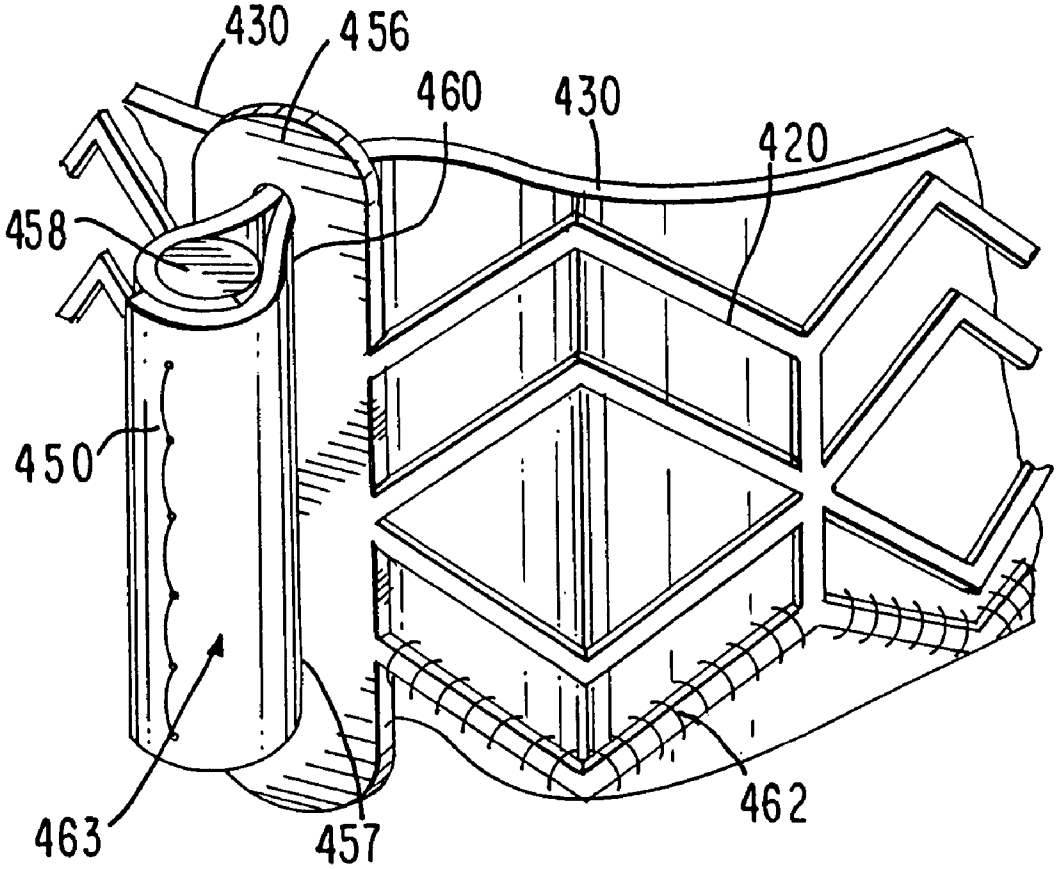

FIG. 28

FIG. 29a

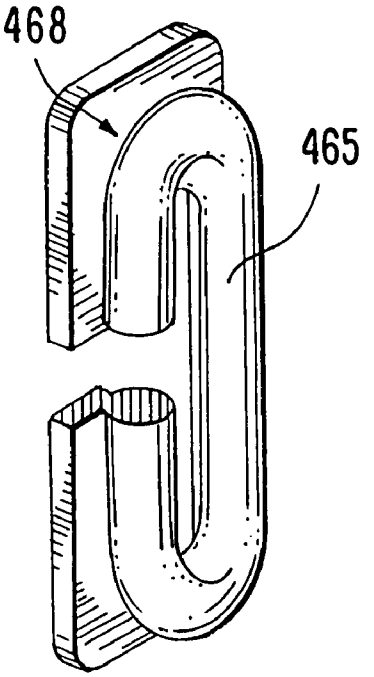

FIG. 29b

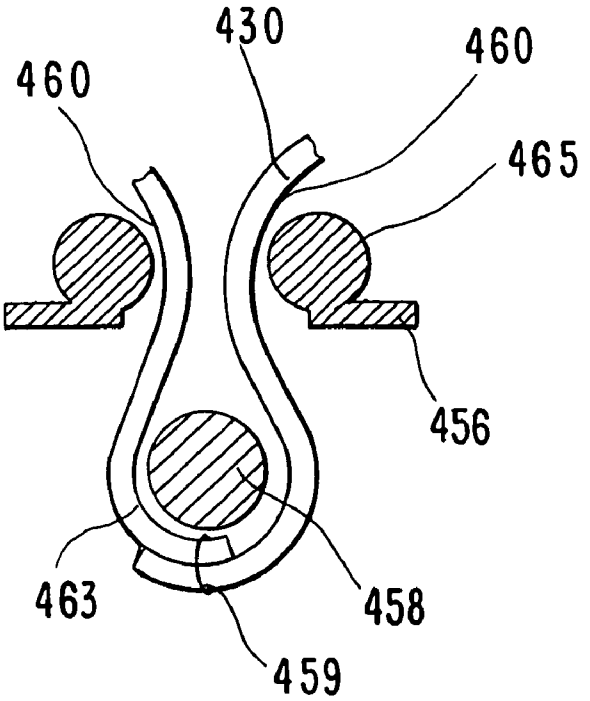

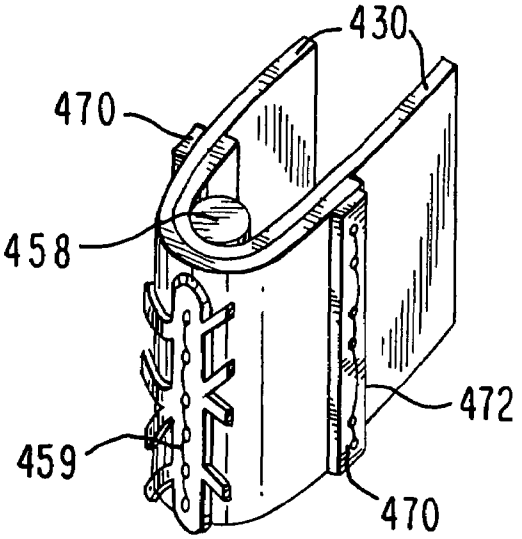

FIG.30a

FIG.30b

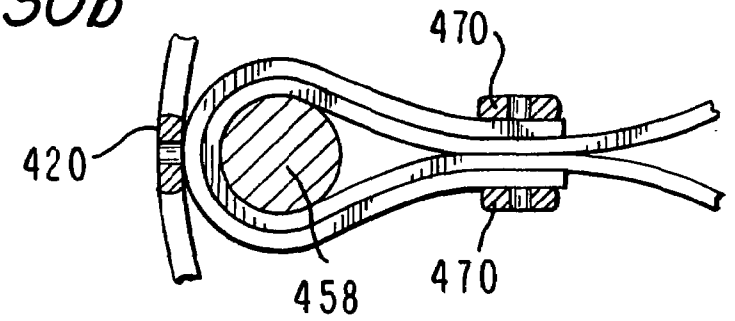

FIG.30c

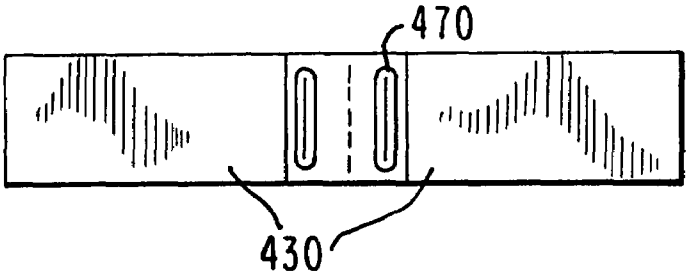

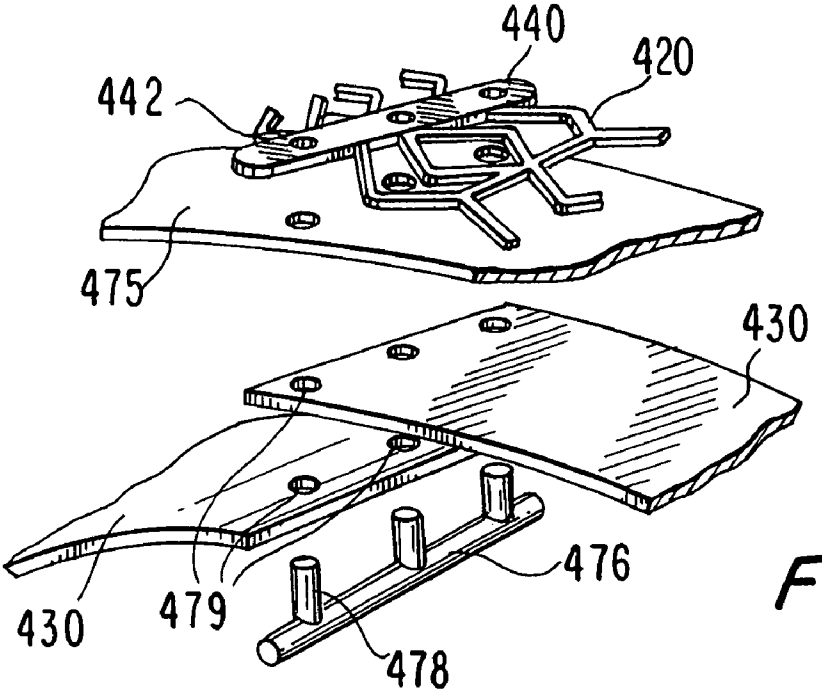

FIG. 31a

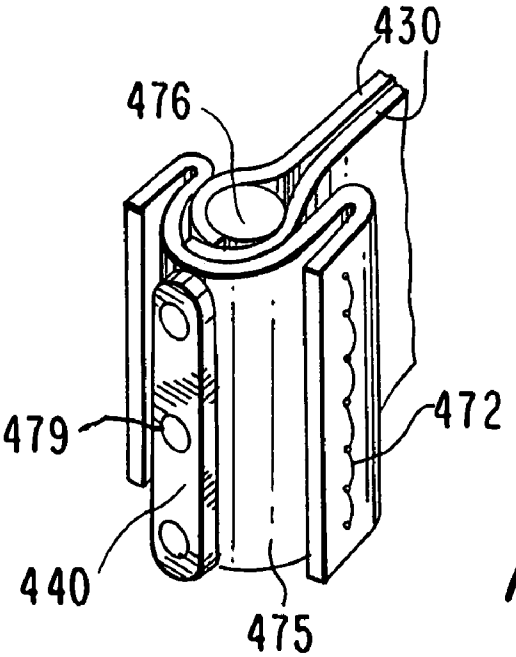

FIG. 31b

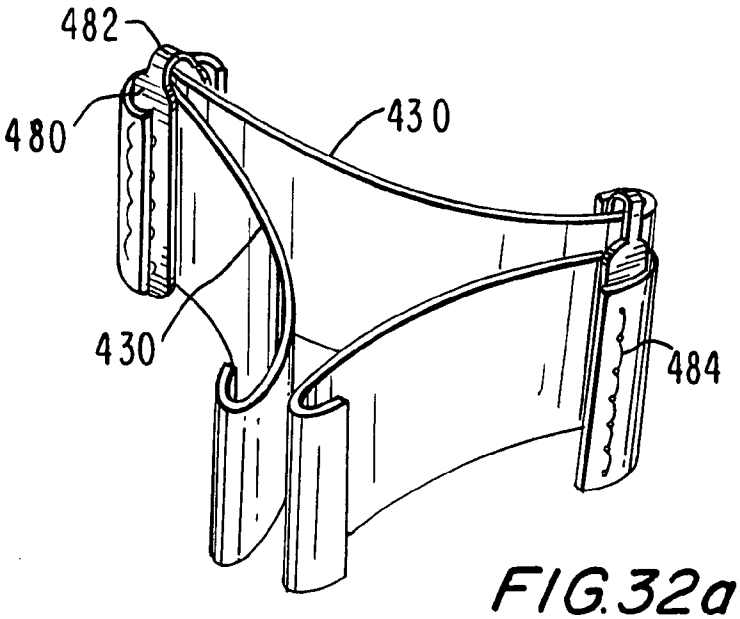

FIG.32a

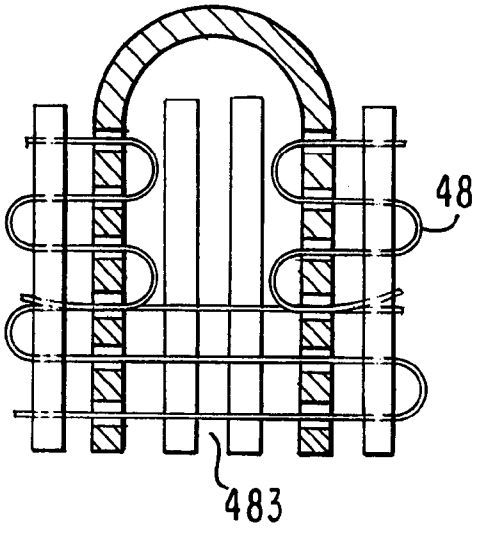

FIG.32c

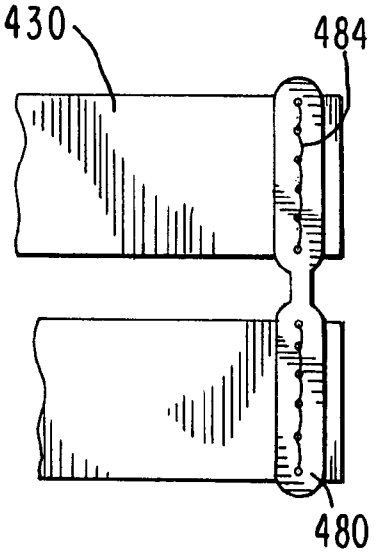

FIG.32b

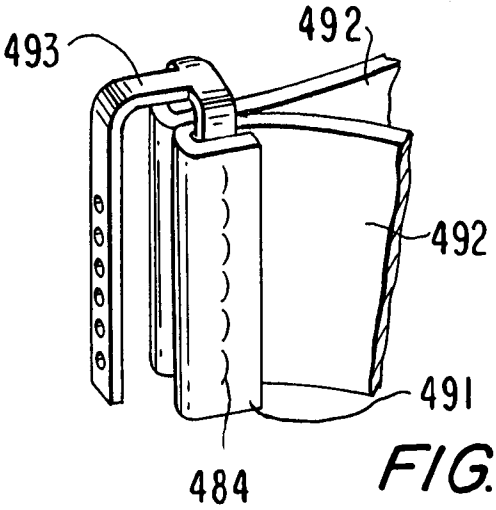

FIG.33a

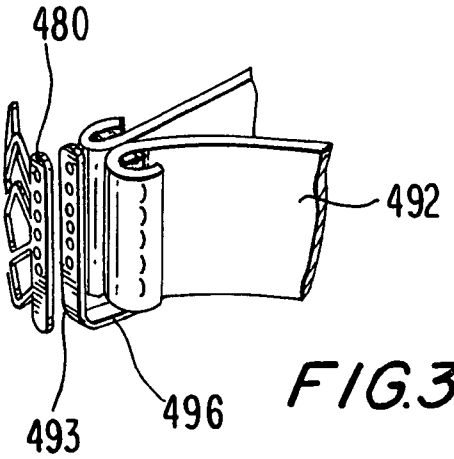

FIG.33b

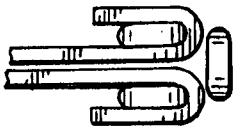

FIG.33c

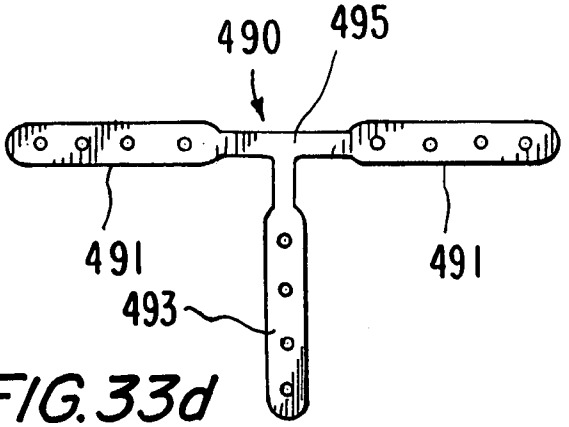

FIG.33d

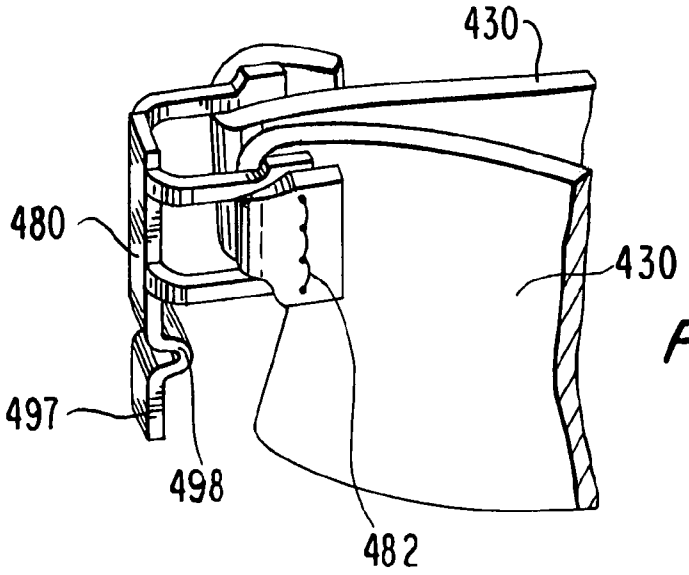

FIG.34a

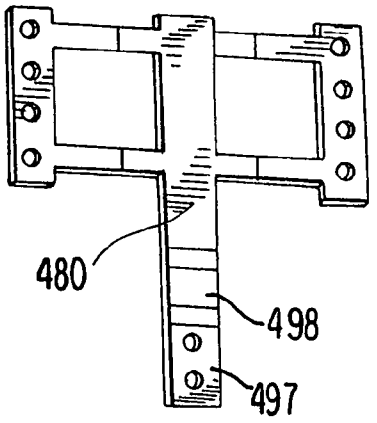

FIG.34b

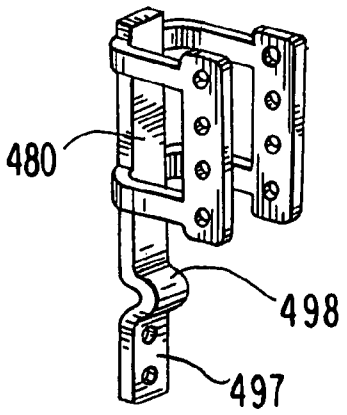

FIG.34c

FIG. 35a

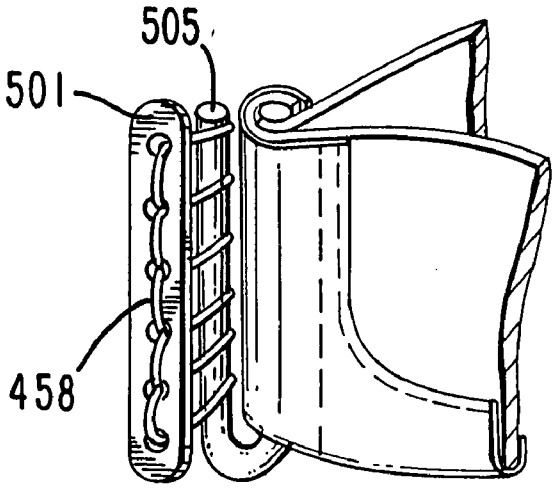

FIG. 35b

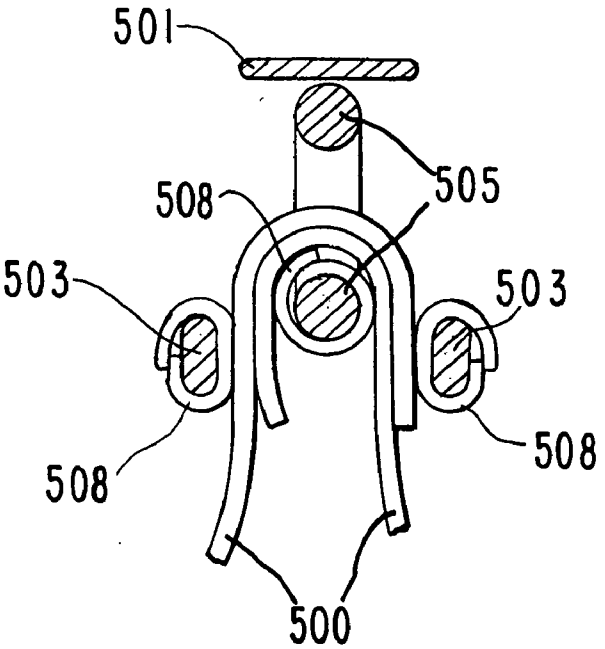

FIG. 35c

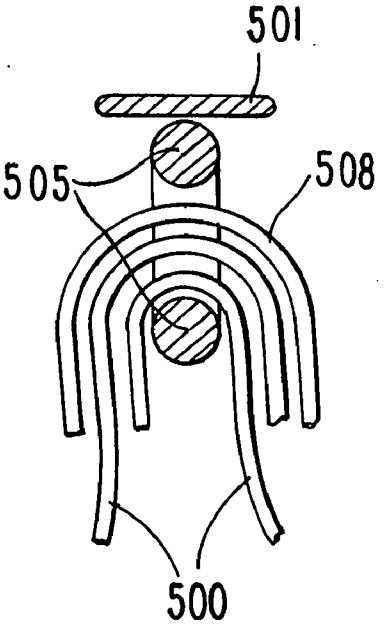

FIG. 36a

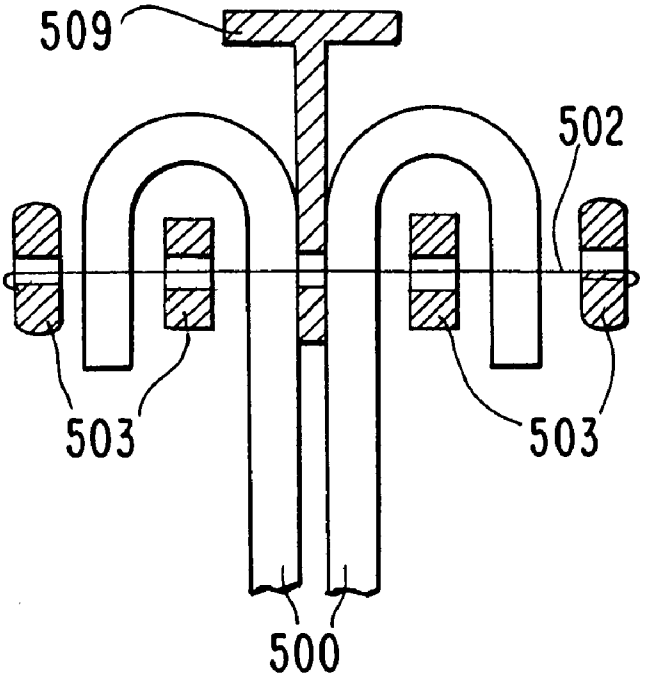

FIG. 36b

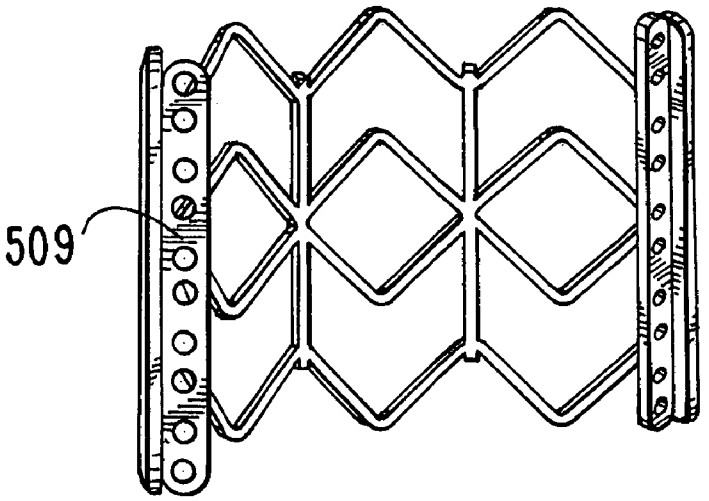

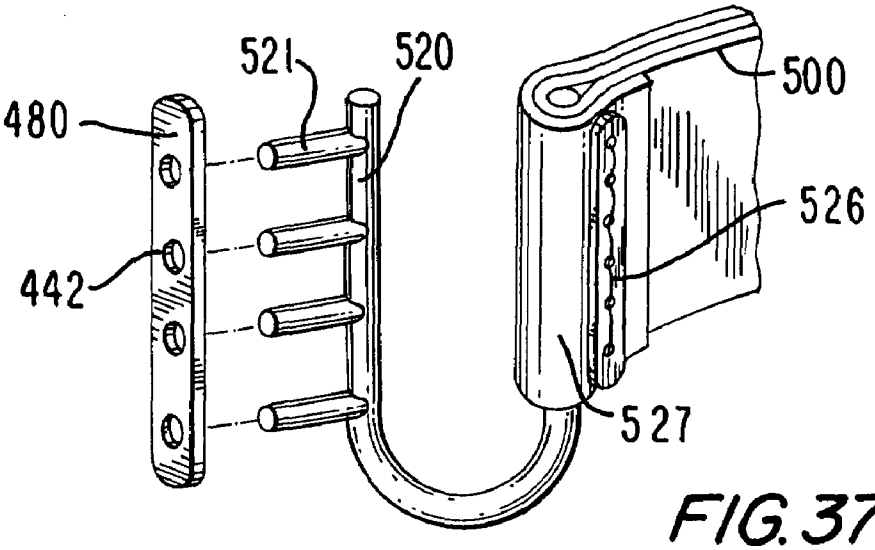

FIG. 37a

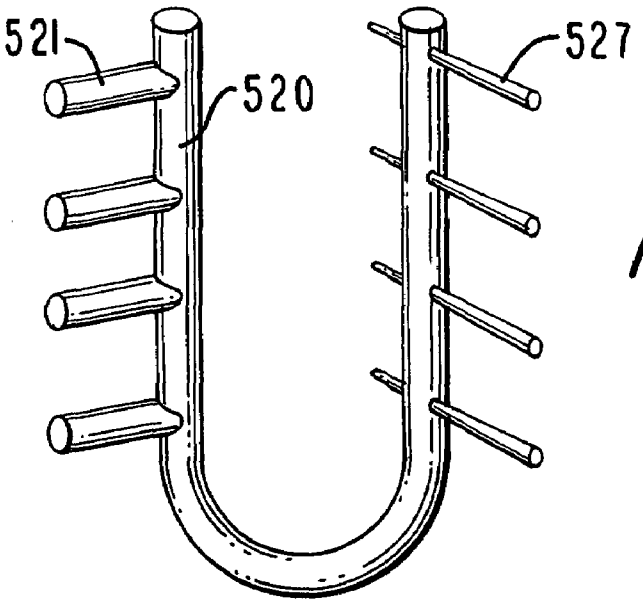

FIG. 37b

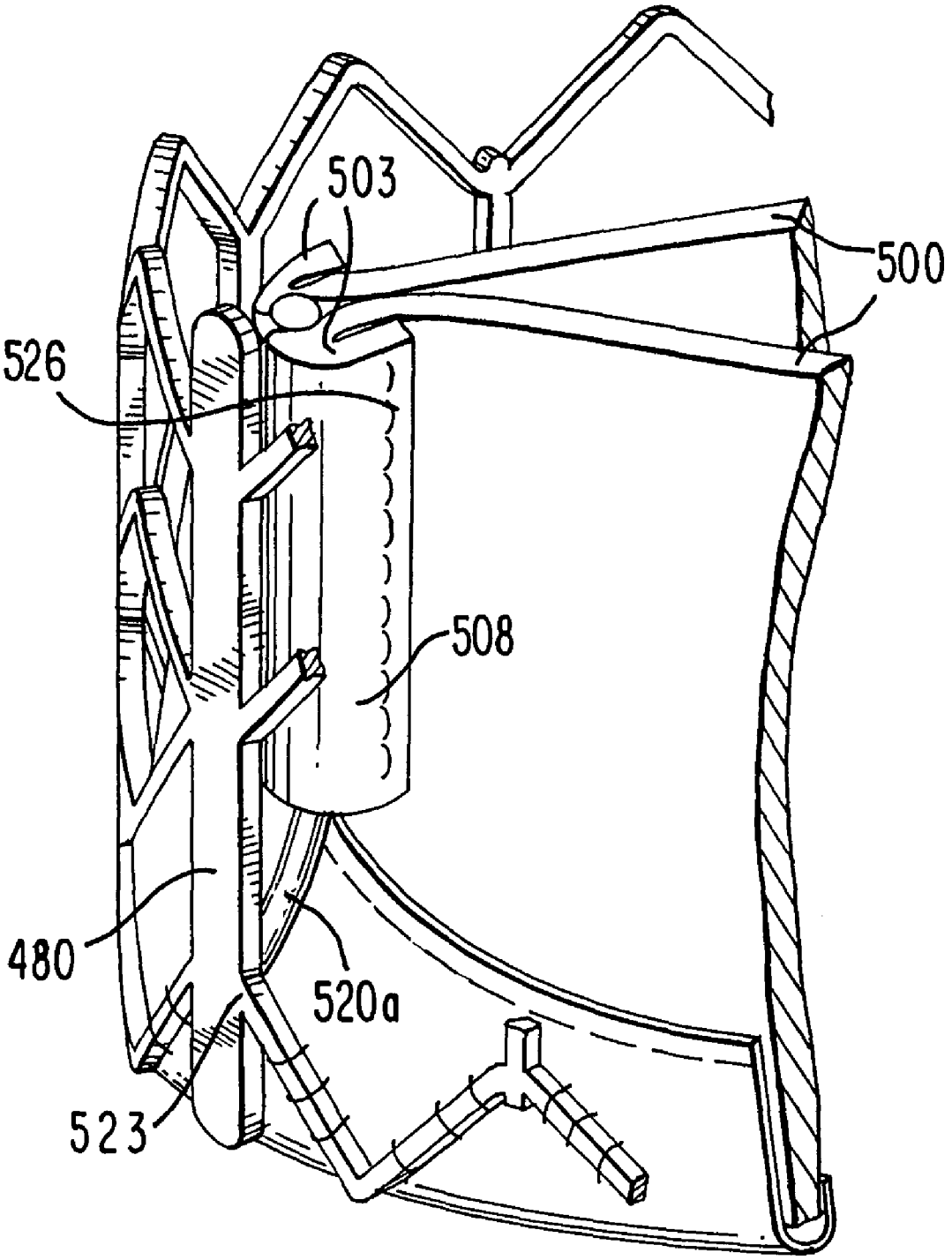

FIG. 37c

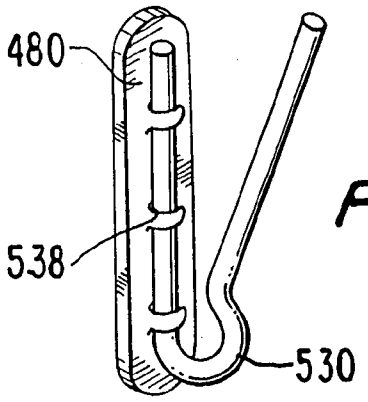

FIG.38a

FIG.38b

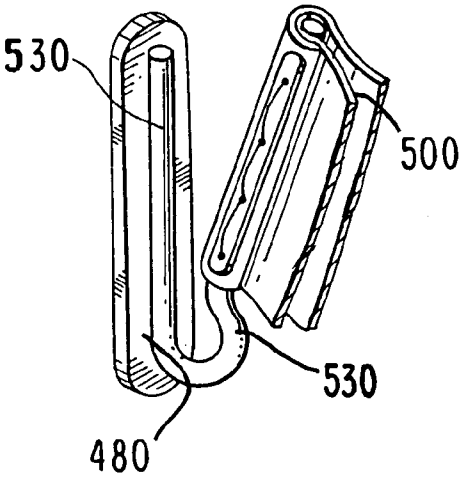

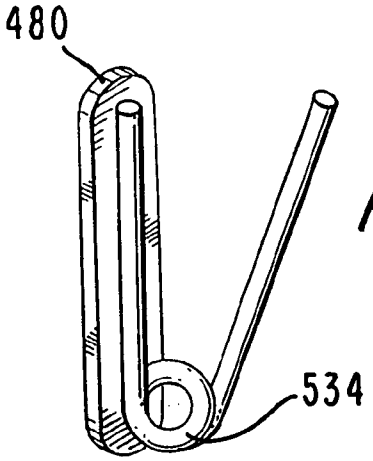

FIG.38c

FIG.38d

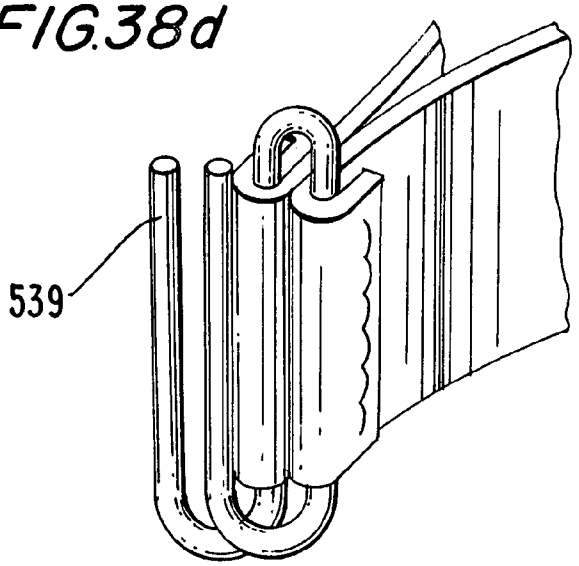

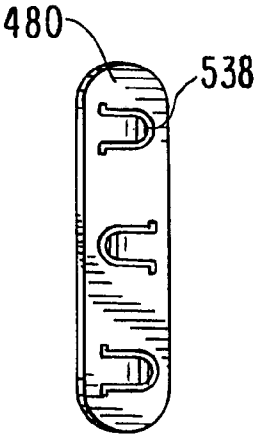

FIG.38e

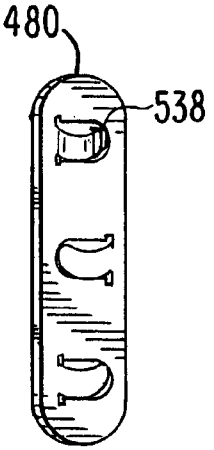

FIG.38f

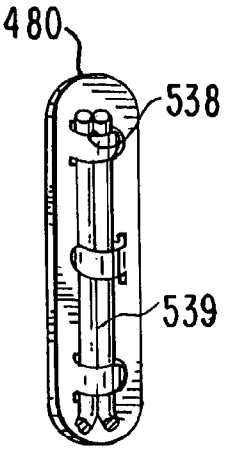

FIG.38g

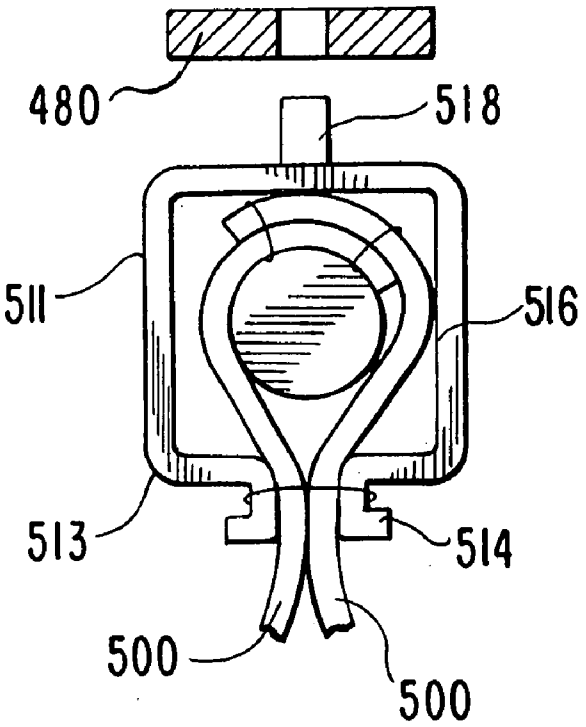

FIG. 39a

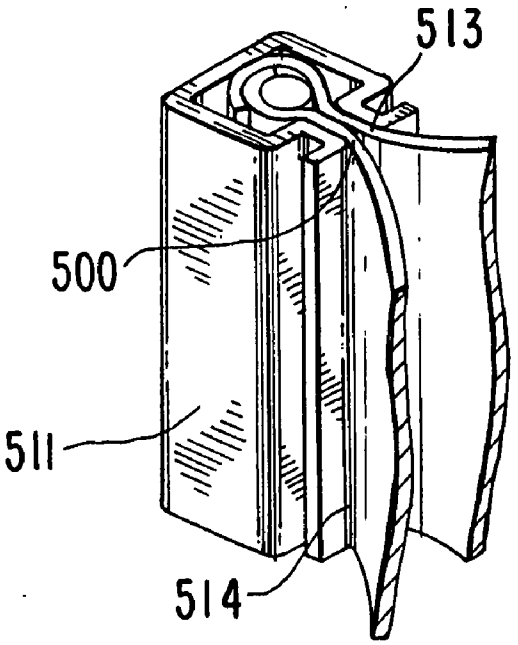

FIG. 39b

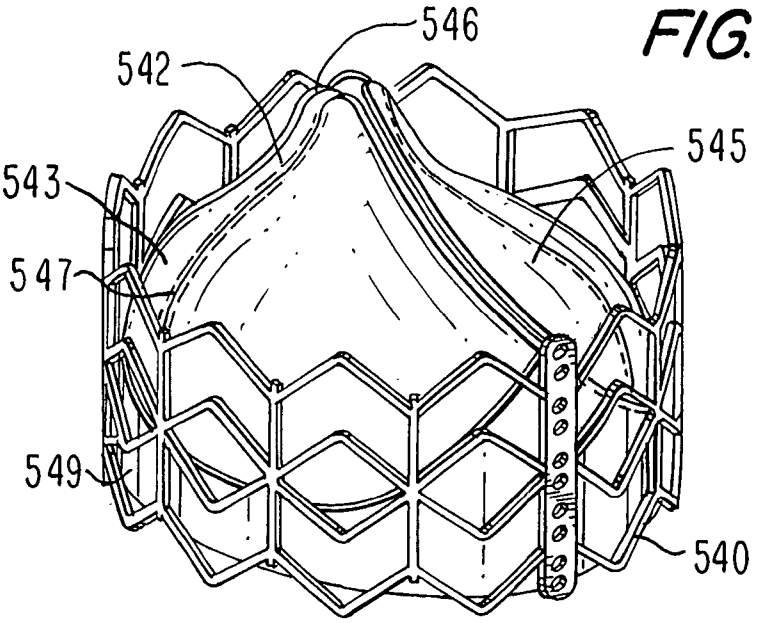

FIG. 40a

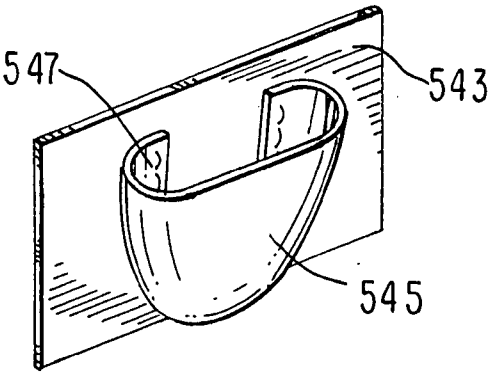

FIG. 40b

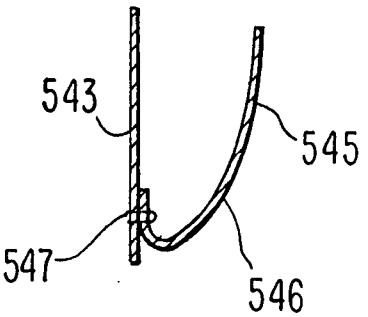

FIG. 40c

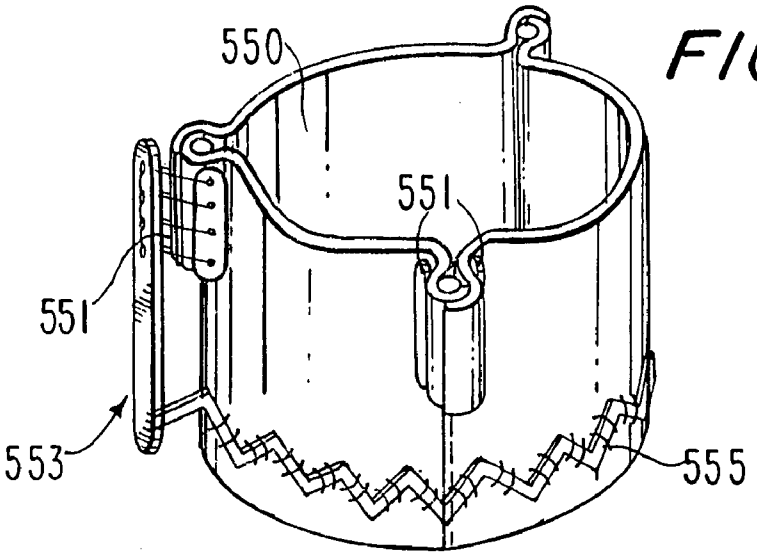

FIG. 41a

FIG. 41b

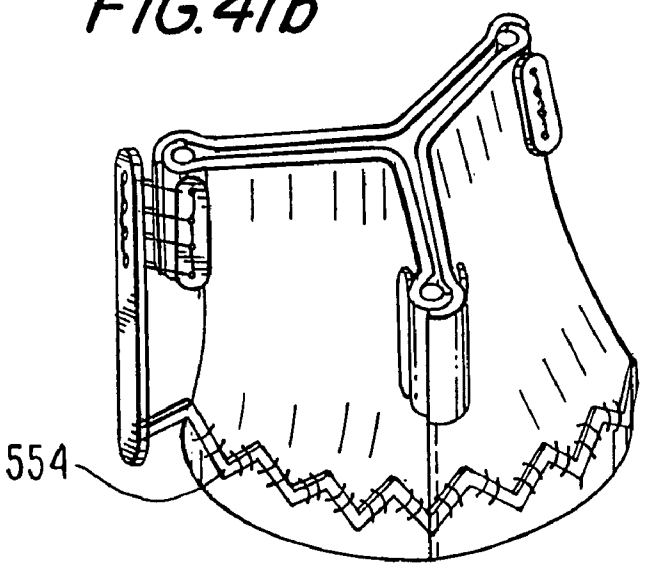

FIG. 41c

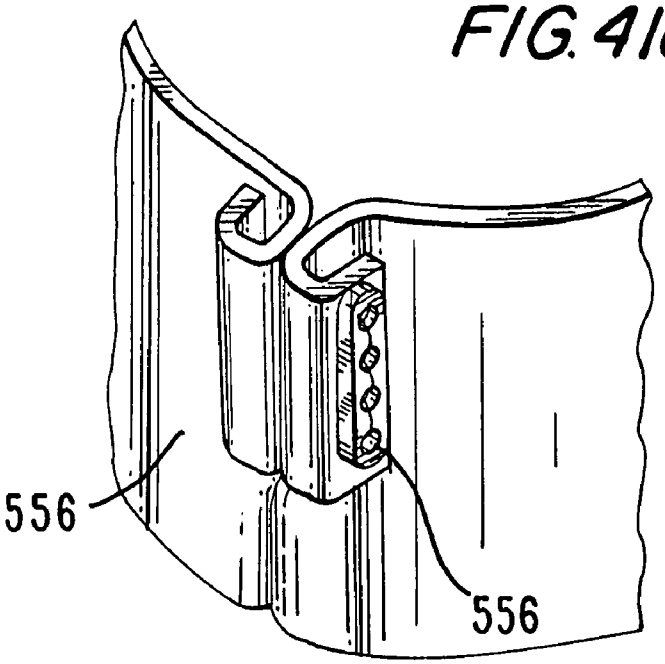

FIG. 41d

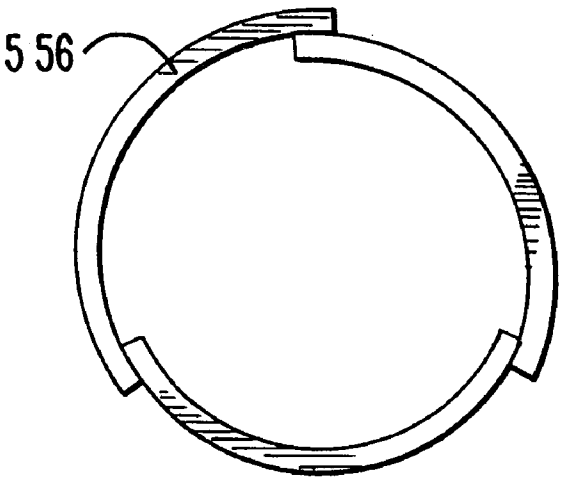

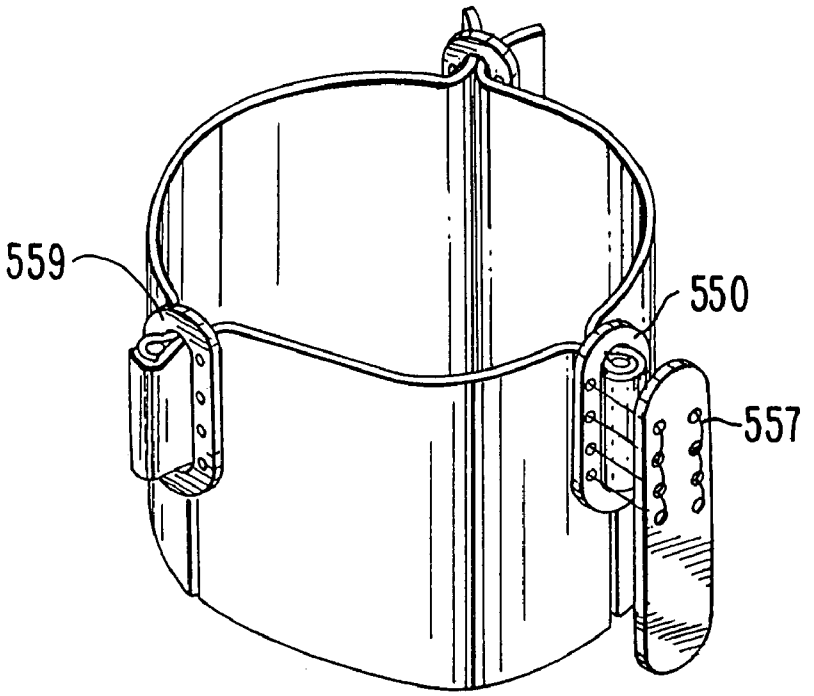

FIG. 42a

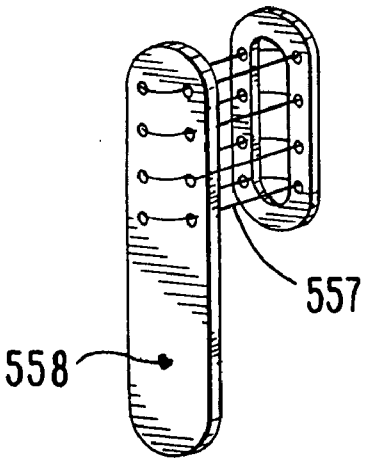

FIG. 42b

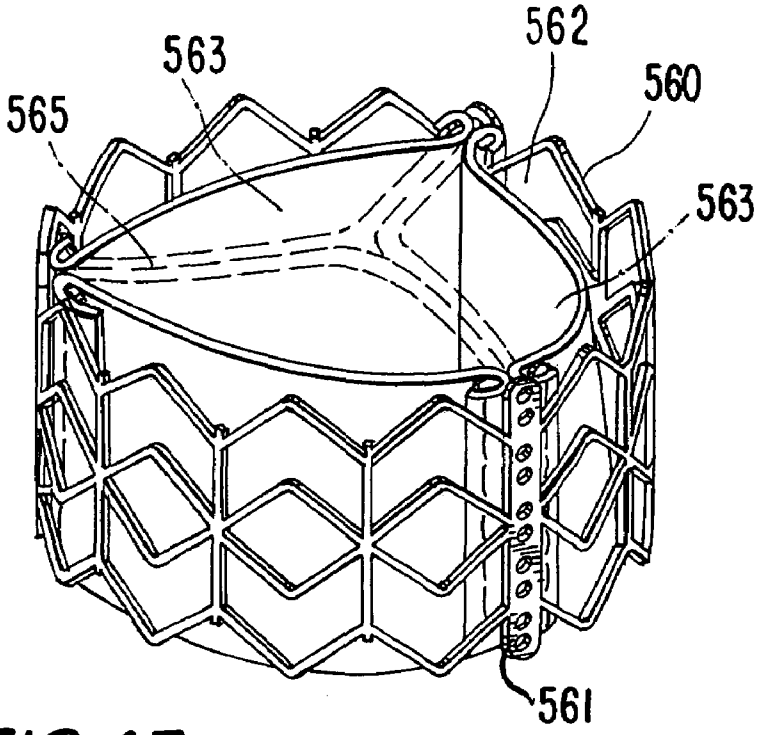

FIG. 43a

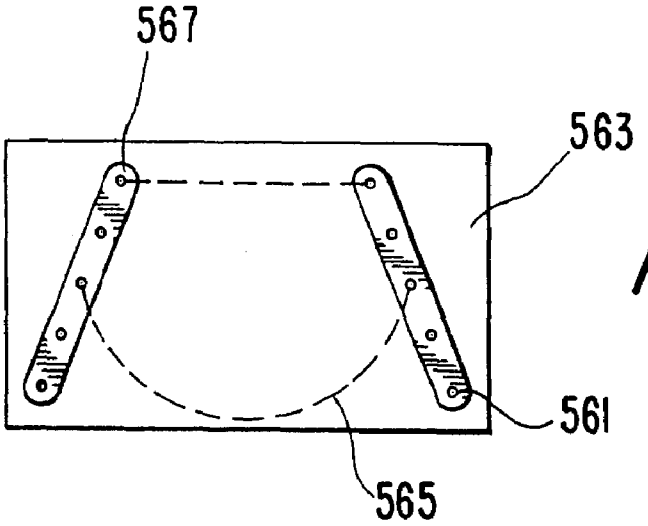

FIG. 43b

FIG. 44a

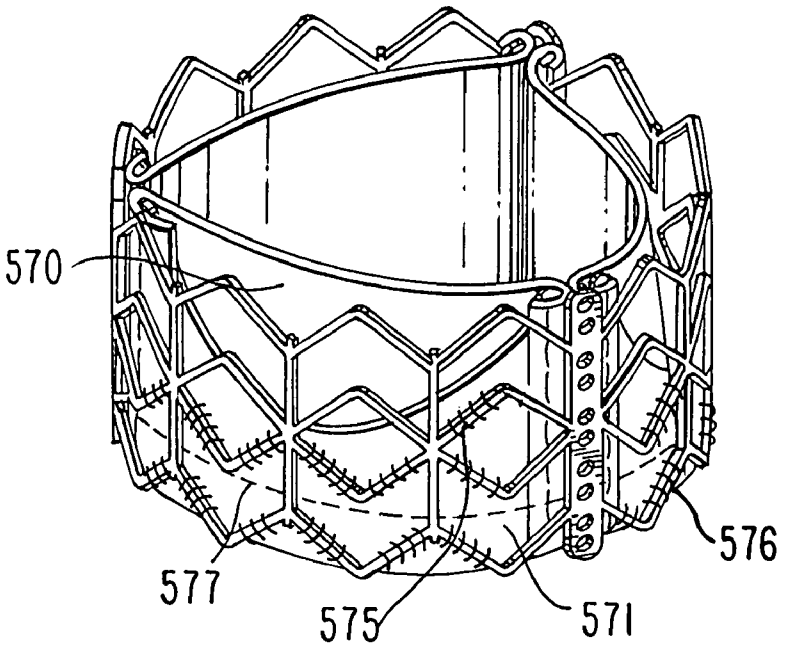

FIG. 44b

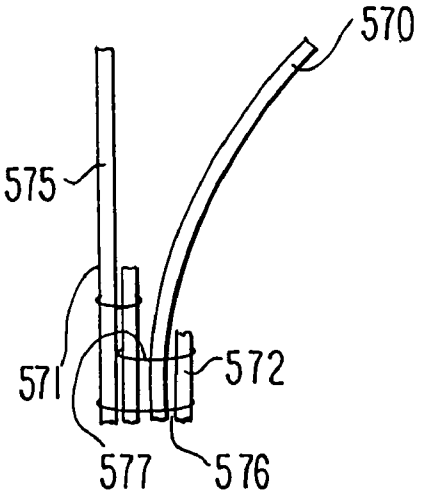

FIG. 44c

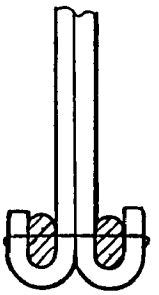

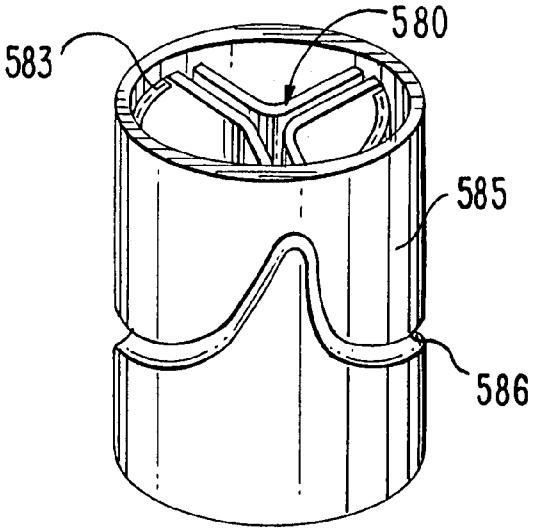

FIG. 45a

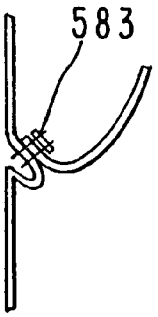

FIG.45b

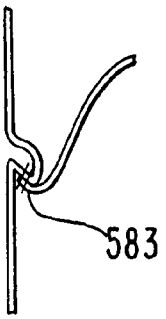

FIG.45d

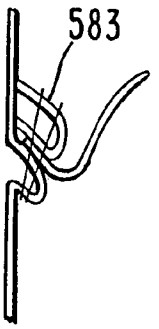

FIG.45c

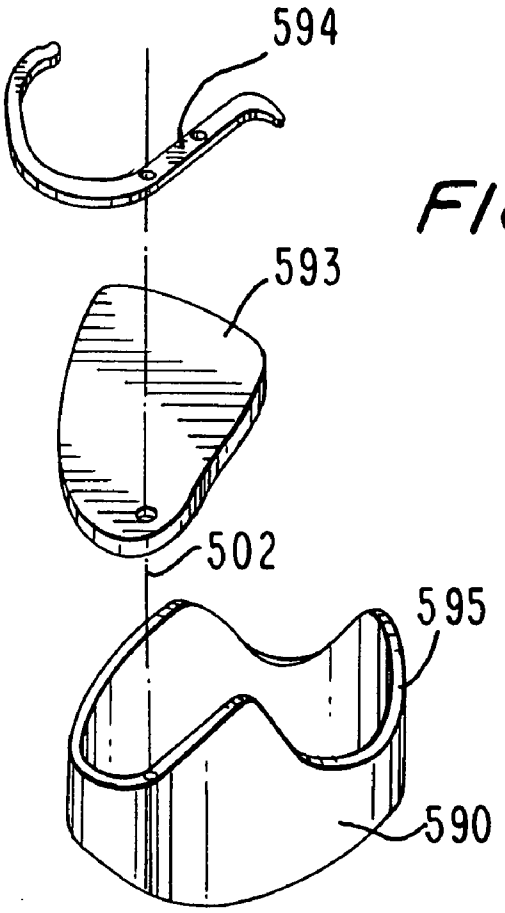

FIG. 46a

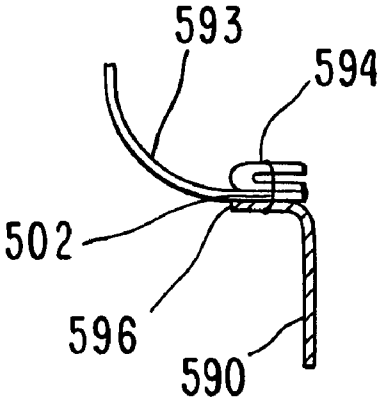

FIG. 46b

FIG. 47a

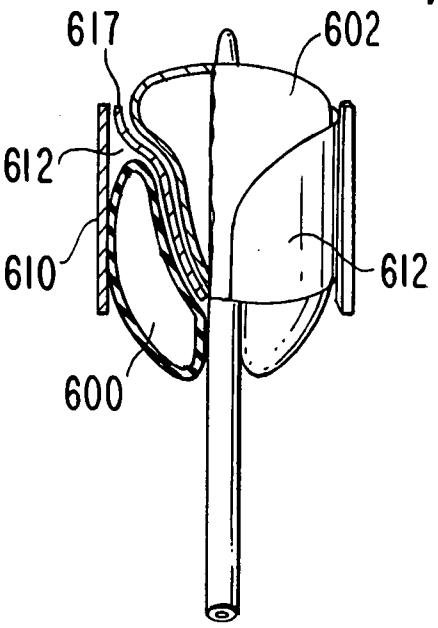

FIG. 47b

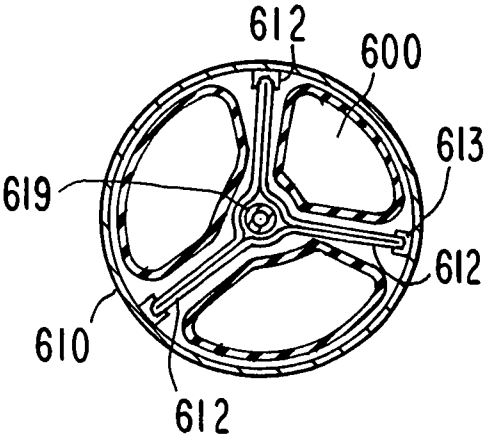

FIG. 47c

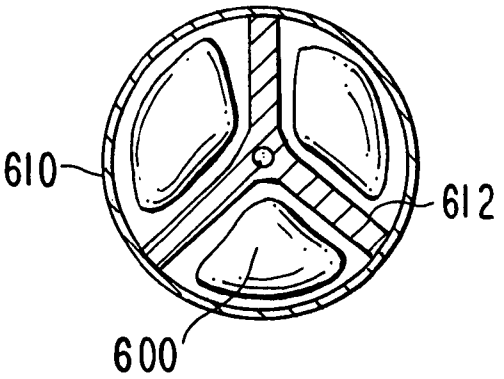

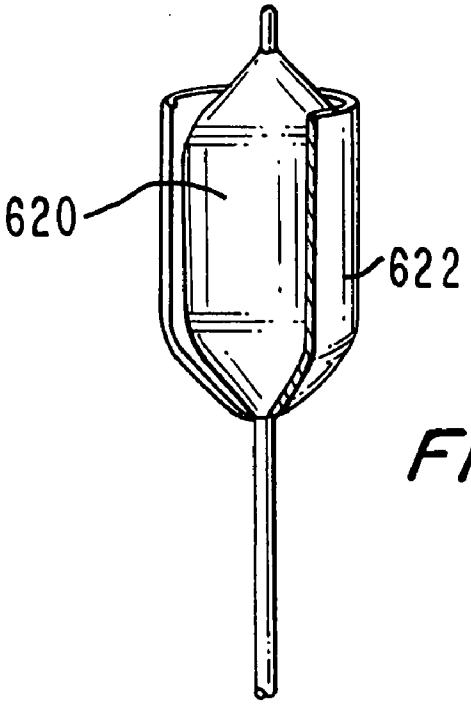

FIG. 48a

FIG. 48b

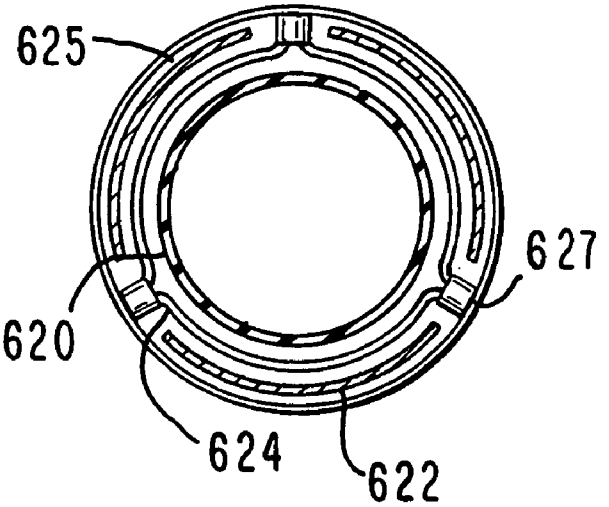

IMPLANTABLE PROSTHETIC VALVE

CROSS-REFERENCE TO RELATED APPLICATIONS

This application is a divisional of U.S. patent application Ser. No. 10/270,252 now U.S. Pat No. 6,730,118, filed Oct. 11, 2002, which is in turn a continuation-in-part of U.S. patent application Ser. No. 09/975,750, filed Oct. 11, 2001 now U.S. Pat No. 6,893,460.

FIELD OF THE INVENTION

The present invention relates to implantable devices. More particularly, it relates to a valve prosthesis for cardiac implantation or for implantation in other body ducts.

BACKGROUND OF THE INVENTION

There are several known prosthetic valves that have been previously described. U.S. Pat. No. 5,411,552 (Andersen et al.), entitled VALVE PROSTHESIS FOR IMPLANTATION IN THE BODY AND CATHETER FOR IMPLANTING SUCH VALVE PROSTHESIS, discloses a valve prosthesis comprising a stent made from an expandable cylinder-shaped thread structure comprising several spaced apices. The elastically collapsible valve is mounted on the stent with the commissural points of the valve secured to the projecting apices, which prevents the valve from turning inside out. Deployment of the valve can be achieved by using an inflatable balloon which in its deflated state is used to carry about it the valve structure to its position and, when inflated, deploys the stent in position to its final size. See, also, U.S. Pat. No. 6,168,614 (Andersen et al.) entitled VALVE PROSTHESIS FOR IMPLANTATION IN THE BODY and U.S. Pat. No. 5,840,081 (Andersen et al.), entitled SYSTEM AND METHOD FOR IMPLANTING CARDIAC VALVES.

In PCT/EP97/07337 (Letac, Cribier et al.), published as WO 98/29057, entitled VALVE PROSTHESIS FOR IMPLANTATION IN BODY CHANNELS, there is disclosed a valve prosthesis comprising a collapsible valve structure and an expandable frame on which the valve structure is mounted. The valve structure is composed of a valvular tissue compatible with the human body and blood, the valvular tissue being sufficiently supple and resistant to allow the valve structure to be deformed from a closed state to an opened state. The valvular tissue forms a continuous surface and is provided with guiding means formed or incorporated within, the guiding means creating stiffened zones which induce the valve structure to follow a patterned movement in its expansion to its opened state and in its turning back to its closed state. The valve structure can be extended to an internal cover which is fastened to the lower part of the valve structure to prevent regurgitation.

There are several known methods currently used for replacing aortic valves and several types of artificial prosthetic devices. Mechanical valves are commonly used in several different designs (single and double flap) manufactured by well-known companies such as St. Jude, Medtronic, Sulzer, and others. Some of the main disadvantages of these devices are: a need for permanent treatment of anticoagulants, noisy operation, and a need for a large-scale operation to implant.

There is a wide range of biologically based valves made of natural valves or composed of biological materials such as pericardial tissue. These too are made and marketed by well-known companies such as Edwards Lifesciences, Medtronic, Sulzer, Sorin, and others.

Polymer valves are new and are not yet in use, but several companies are in the process of developing such products. A new type of prosthesis is being considered, based on artificial polymer materials such as polyurethane.

The present invention introduces several novel structural designs for implantable valves. An aspect of the present invention deals with the possibility of implanting the valve percutaneously, i.e., inserting the valve assembly on a delivery device similar to a catheter, then implanting the valve at the desired location via a large blood vessel such as the femoral artery, in a procedure similar to other known interventional cardiovascular procedures. The percutaneous deployment procedure and device has an impact on the product design in several parameters, some of which are explained hereinafter.

The percutaneous implantation of medical devices and particularly prosthetic valves is a preferred surgical procedure for it involves making a very small perforation in the patient's skin (usually in the groin or armpit area) under local anesthetic and sedation, as opposed to a large chest surgery incision, which requires general anesthesia, opening a large portion of the chest, and cardiopulmonary bypass. This percutaneous procedure is therefore considered safer.

The present invention provides a series of new concepts in the field of aortic valves and other human valves.

SUMMARY OF THE INVENTION

It is therefore thus provided, in accordance with a preferred embodiment of the present invention, a valve prosthesis device suitable for implantation in body ducts, the device comprising:

- a support stent, comprised of a deployable construction adapted to be initially crimped in a narrow configuration suitable for catheterization through the body duct to a target location and adapted to be deployed by exerting substantially radial forces from within by means of a deployment device to a deployed state in the target location, the support stent provided with a plurality of longitudinally rigid support beams of fixed length; and
- a valve assembly comprising a flexible conduit having an inlet end and an outlet, made of pliant material attached to the support beams providing collapsible slack portions of the conduit at the outlet,
- whereby when flow is allowed to pass through the valve prosthesis device from the inlet to the outlet the valve assembly is kept in an open position, whereas a reverse flow is prevented as the collapsible slack portions of the valve assembly collapse inwardly providing blockage to the reverse flow.

Furthermore, in accordance with another preferred embodiment of the present invention, the support stent comprises an annular frame.

Furthermore, in accordance with another preferred embodiment of the present invention, said valve assembly has a tricuspid configuration.

Furthermore, in accordance with another preferred embodiment of the present invention, said valve assembly is made from biocompatible material.

Furthermore, in accordance with another preferred embodiment of the present invention, the valve assembly is made from pericardial tissue, or other biological tissue.

Furthermore, in accordance with another preferred embodiment of the present invention, said valve assembly is made from biocompatible polymers.

Furthermore, in accordance with another preferred embodiment of the present invention, the valve assembly is

made from materials selected from the group consisting of polyurethane and polyethylene terephthalate (PET).

Furthermore, in accordance with another preferred embodiment of the present invention, said valve assembly comprises a main body made from PET (polyethylene terephthalate) and leaflets made from polyurethane.

Furthermore, in accordance with another preferred embodiment of the present invention, said support stent is made from nickel titanium.

Furthermore, in accordance with another preferred embodiment of the present invention, the support beams are substantially equidistant and substantially parallel so as to provide anchorage for the valve assembly.

Furthermore, in accordance with another preferred embodiment of the present invention, the support beams are provided with bores so as to allow stitching or tying of the valve assembly to the beams.

Furthermore, in accordance with another preferred embodiment of the present invention, the support beams are chemically adhered to the support stent.

Furthermore, in accordance with another preferred embodiment of the present invention, said valve assembly is riveted to the support beams.

Furthermore, in accordance with another preferred embodiment of the present invention, said valve assembly is stitched to the support beams.

Furthermore, in accordance with another preferred embodiment of the present invention, said beams are manufactured by injection using a mold, or by machining.

Furthermore, in accordance with another preferred embodiment of the present invention, said valve assembly is rolled over the support stent at the inlet.

Furthermore, in accordance with another preferred embodiment of the present invention, said valve device is manufactured using forging or dipping techniques.

Furthermore, in accordance with another preferred embodiment of the present invention, said valve assembly leaflets are longer than needed to exactly close the outlet, thus when they are in the collapsed state substantial portions of the leaflets fall on each other creating better sealing.

Furthermore, in accordance with another preferred embodiment of the present invention, said valve assembly is made from coils of a polymer, coated by a coating layer of same polymer.

Furthermore, in accordance with another preferred embodiment of the present invention, said polymer is polyurethane.

Furthermore, in accordance with another preferred embodiment of the present invention, the support stent is provided with heavy metal markers so as to enable tracking and determining the valve device position and orientation.

Furthermore, in accordance with another preferred embodiment of the present invention, the heavy metal markers are selected from gold, platinum, iridium, or tantalum.

Furthermore, in accordance with another preferred embodiment of the present invention, the valve assembly leaflets are provided with radio-opaque material at the outlet, so as to help tracking the valve device operation in vivo.

Furthermore, in accordance with another preferred embodiment of the present invention, said radio-opaque material comprises gold thread.

Furthermore, in accordance with another preferred embodiment of the present invention, the diameter of said support stent, when fully deployed is in the range of from about 19 to about 25 mm.

Furthermore, in accordance with another preferred embodiment of the present invention, the diameter of said support stent may be expanded from about 4 to about 25 mm.

Furthermore, in accordance with another preferred embodiment of the present invention, the support beams are provided with bores and wherein the valve assembly is attached to the support beams by means of U-shaped rigid members that are fastened to the valve assembly and that are provided with extruding portions that fit into matching bores on the support beams.

Furthermore, in accordance with another preferred embodiment of the present invention, the support beams comprise rigid support beams in the form of frame construction, and the valve assembly pliant material is inserted through a gap in the frame and a fastening rod is inserted through a pocket formed between the pliant material and the frame and holds the valve in position.

Furthermore, in accordance with another preferred embodiment of the present invention, the main body of the valve assembly is made from coiled wire coated with coating material.

Furthermore, in accordance with another preferred embodiment of the present invention, the coiled wire and the coating material is made from polyurethane.

Furthermore, in accordance with another preferred embodiment of the present invention, a strengthening wire is interlaced in the valve assembly at the outlet of the conduit so as to define a fault line about which the collapsible slack portion of the valve assembly may flap.

Furthermore, in accordance with another preferred embodiment of the present invention, the strengthening wire is made from nickel titanium alloy.

Furthermore, in accordance with another preferred embodiment of the present invention, there is provided a valve prosthesis device suitable for implantation in body ducts, the device comprising a main conduit body having an inlet and an outlet and pliant leaflets attached at the outlet so that when a flow passes through the conduit from the inlet to the outlet the leaflets are in an open position allowing the flow to exit the outlet, and when the flow is reversed the leaflets collapse so as to block the outlet, wherein the main body is made from PET and collapsible leaflets are made form polyurethane.

Furthermore, in accordance with another preferred embodiment of the present invention, support beams made from polyurethane are provided on the main body and wherein the leaflets are attached to the main body at the support beams.

Furthermore, in accordance with another preferred embodiment of the present invention, said support beams are chemically adhered to the main body.

Furthermore, in accordance with another preferred embodiment of the present invention, there is provided a valve prosthesis device suitable for implantation in body ducts, the device comprising:

a support stent, comprised of a deployable construction adapted to be initially crimped in a narrow configuration suitable for catheterization through the body duct to a target location and adapted to be deployed by exerting substantially radial forces from within by means of a deployment device to a deployed state in the target location, the support stent provided with a plurality of longitudinally rigid support beams of fixed length;

a valve assembly comprising a flexible conduit having an inlet end and an outlet, made of pliant material attached to the support beams providing collapsible slack portions of the conduit at the outlet; and

substantially equidistant rigid support beams interlaced or attached to the slack portion of the valve assembly material, arranged longitudinally.

Furthermore, in accordance with another preferred embodiment of the present invention, there is provided a crimping device for crimping the valve device described above or in Claim 1, the crimping device comprising a plurality of adjustable plates that resemble a typical SLR (Single Lens Reflex) camera variable restrictor, each provided with a blade, that are equally dispersed in a radial symmetry but each plate moves along a line passing off an opening in the center, all plates equidistant from that center opening.

Furthermore, in accordance with another preferred embodiment of the present invention, the multiple plates are adapted to move simultaneously by means of a lever and transmission.

Furthermore, in accordance with another preferred embodiment of the present invention, there is provided a method for deploying an implantable prosthetic valve device from the retrograde approach (approaching the aortic valve from the descending aorta) or from the antegrade approach (approaching the aortic valve from the left ventricle after performing a trans-septal puncture) at the natural aortic valve position at the entrance to the left ventricle of a myocardium of a patient, the method comprising the steps of:

(a) providing a balloon catheter having a proximal end and a distal end, having a first and second independently inflatable portions, the first inflatable portion located at the distal end of the catheter and the second inflatable portion adjacently behind the first inflatable portion;

(b) providing a guiding tool for guiding the balloon catheter in the vasculature of the patient;

(c) providing a deployable implantable valve prosthesis device adapted to be mounted on the second inflatable portion of the balloon catheter;

(d) for the retrograde approach, guiding the balloon catheter through the patient's aorta using the guiding tool, the valve device mounted over the second inflatable portion of the balloon catheter until the first inflatable portion of the balloon catheter is inserted into the left ventricle, whereas the second inflatable portion of the balloon catheter is positioned at the natural aortic valve position;

(e) for the antegrade approach, guiding the balloon catheter through the patient's greater veins, right atrium, left atrium, and left ventricle using the guiding tool, the valve device mounted over the second inflatable portion of the balloon catheter until the first inflatable portion of the balloon catheter is inserted into the left ventricle, whereas the second inflatable portion of the balloon catheter is positioned at the natural aortic valve position;

(f) inflating the first inflatable portion of the balloon catheter so as to substantially block blood flow through the natural aortic valve and anchor the distal end of the balloon catheter in position;

(g) inflating the second inflatable portion of the balloon catheter so as to deploy the implantable prosthetic valve device in position at the natural aortic valve position;

(h) deflating the first and second inflatable portions of the balloon catheter; and

(i) retracting the balloon catheter and removing it from the patient's body.

Furthermore, in accordance with another preferred embodiment of the present invention, the guiding tool comprises a guide wire.

Furthermore, in accordance with another preferred embodiment of the present invention, there is provided a method for deploying an implantable prosthetic valve device at the natural aortic valve position at the entrance to the left ventricle of a myocardium of a patient, the method comprising the steps of:

(a) providing a balloon catheter having a proximal end and a distal end, having a first and second independently inflatable portions, the first inflatable portion located at the distal end of the catheter and the second inflatable portion adjacently behind the first inflatable portion;

(b) providing a guiding tool for guiding the balloon catheter in the vasculature of the patient;

(c) providing a deployable implantable valve prosthesis device adapted to be mounted on the first inflatable portion of the balloon catheter, and a deployable annular stent device adapted to be mounted over the second inflatable portion of the balloon catheter, the deployable implantable valve prosthesis device and the deployable annular stent kept at a predetermined distant apart;

(d) guiding the balloon catheter through the patient's aorta using the guiding tool, the valve device mounted over the first inflatable portion of the balloon catheter and the deployable annular stent mounted over the second inflatable portion of the balloon catheter, until the first inflatable portion of the balloon catheter is positioned at the natural aortic valve position;

(e) inflating the second inflatable portion of the balloon catheter so that the deployable stent device is deployed within the aorta thus anchoring the deployable annular stent and the coupled valve device in position;

(f) inflating the first inflatable portion of the balloon catheter so as to deploy the implantable prosthetic valve device in position at the natural aortic valve position;

(g) deflating the first and second inflatable portions of the balloon catheter; and

(h) retracting the balloon catheter and removing it from the patient's body.

Furthermore, in accordance with another preferred embodiment of the present invention, a valve prosthesis device suitable for implantation in body ducts comprises:

an expandable support frame, the support frame provided with a plurality of longitudinally rigid support beams of fixed length; and

a valve assembly comprising a flexible conduit having an inlet end and an outlet, made of pliant material attached to the support beams providing collapsible slack portions of the conduit at the outlet,

whereby when flow is allowed to pass through the valve prosthesis device from the inlet to the outlet the valve assembly is kept in an open position, whereas a reverse flow is prevented as the collapsible slack portions of the valve assembly collapse inwardly providing blockage to the reverse flow.

Furthermore, in accordance with another preferred embodiment of the present invention, the support frame comprises a deployable construction adapted to be initially crimped in a narrow configuration suitable for catheterization through the body duct to a target location and adapted to be deployed by exerting substantially radial forces from within by means of a deployment device to a deployed state in the target location.

Furthermore, in accordance with another preferred embodiment of the present invention, the support beams have a U-shaped cross section.

Furthermore, in accordance with another preferred embodiment of the present invention, a holder is used to secure the plaint material to the support beams.

Furthermore, in accordance with another preferred embodiment of the present invention, the support frame comprises three segments that form a circular assembly when assembled.

Furthermore, in accordance with another preferred embodiment of the present invention, the support beams point inwardly with respect to a central longitudinal axis of the device.

Furthermore, in accordance with another preferred embodiment of the present invention, the device is further provided with a restricting tapered housing, for housing it in a crimped state.

Furthermore, in accordance with another preferred embodiment of the present invention, hooks are provided to secure the device in position after it is deployed.

Furthermore, in accordance with another preferred embodiment of the present invention, the support beams comprise longitudinal bars having a narrow slit used as the commissural attachment so that extensions the pliant material are tightly inserted through it.

Furthermore, in accordance with another preferred embodiment of the present invention, the extensions of the pliant material are wrapped about rigid bars serving as anchorage means.

Furthermore, in accordance with another preferred embodiment of the present invention, extensions of the pliant material are sutured to each other at the rigid bars.

Furthermore, in accordance with another preferred embodiment of the present invention, a bottom portion of the pliant material is attached to the inlet.

Furthermore, in accordance with another preferred embodiment of the present invention, the support beams are each provided with a rounded pole, forming a loop through which the pliant material is inserted.

Furthermore, in accordance with another preferred embodiment of the present invention, the pliant material is provided with longitudinal bars attached to the pliant material at positions assigned for attachment to the support frame, in order to prevent localized stress from forming.

Furthermore, in accordance with another preferred embodiment of the present invention, the device is further provided with longitudinal bars having protrusions that are inserted in bores in the pliant material, a sheet of PET and through bores provided on the support beams.

Furthermore, in accordance with another preferred embodiment of the present invention, pliant material is sutured leaving the slack portions free of sutures.

Furthermore, in accordance with another preferred embodiment of the present invention, a connecting member with a split portion is used to connect leaflets of the pliant material to the support beams, the split connecting member compressing the pliant material in position.

Furthermore, in accordance with another preferred embodiment of the present invention, a portion of the connecting member is perpendicular to the split portion.

Furthermore, in accordance with another preferred embodiment of the present invention, the support frame is provided with metallic members coupled to the stent and rigid members are positioned on two opposite sides of the metallic member and held against each other holding portion of the pliant material between them, sutured, the metallic members wrapped with PET.

Furthermore, in accordance with another preferred embodiment of the present invention, the device is further provided with spring in order to reduce wear of the pliant material.

Furthermore, in accordance with another preferred embodiment of the present invention, the spring is provided with a spiral.

Furthermore, in accordance with another preferred embodiment of the present invention, the spring is made from stainless steel.

Furthermore, in accordance with another preferred embodiment of the present invention, the spring is attached to slots provided on the support frames.

Furthermore, in accordance with another preferred embodiment of the present invention, the pliant material is sutured to the support frame forming pockets.

Furthermore, in accordance with another preferred embodiment of the present invention, attachment bars are provided on the stent support at a portion of the stent close to the outlet, onto which the pliant material is coupled, and wherein the pliant material is attached circumferentially to the inlet, leaving slack pliant material.

Furthermore, in accordance with another preferred embodiment of the present invention, the outlet is tapered with respect to the inlet.

Furthermore, in accordance with another preferred embodiment of the present invention, the support frame at the outlet is wider in diameter than the pliant material forming the outlet.

Furthermore, in accordance with another preferred embodiment of the present invention, the pliant material is reinforced using PET.

Furthermore, in accordance with another preferred embodiment of the present invention, the support frame is a tube having an inner wall, having sinusoidal fold lines, wherein the pliant material is sutured to the inner wall of the tube along suture lines.

Furthermore, in accordance with another preferred embodiment of the present invention, additional piece of PET is added below the suture lines.

Furthermore, in accordance with another preferred embodiment of the present invention, the device is incorporated with an angioplasty balloon.

Finally, in accordance with another preferred embodiment of the present invention, balloon has a central longitudinal axis that runs along a flow path through the device, and a perimeter, the balloon comprising four inflatable portions, one portion located along a central axis and the other three located on the perimeter, the pliant material in the form of leaflets is distributed about the perimeter.

BRIEF DESCRIPTION OF THE FIGURES

To better understand the present invention and appreciate its practical applications, the following Figures are provided and referenced hereafter. It should be noted that the Figures are given as examples only and in no way limit the scope of the invention as defined in the appended claims.

FIG. **1** illustrates an implantable prosthetic tricuspid valve in accordance with a preferred embodiment of the present invention, suitable for percutaneous deployment using a stent or similar deploying means, in its deployed-inflated position;

FIG. **2** depicts an implantable valve according to the present invention mounted over a deploying stent with an inflatable balloon;

FIG. **3** illustrates an implantable valve according to the present invention mounted over a stent with an inflatable balloon, in a crimped position;

FIG. **4** depicts implantable valve deployment in a natural aortic valve position in accordance with the present invention;

FIG. **5** demonstrates manufacturing a polyurethane implantable valve using a dipping technique according with the present invention;

FIGS. **6***a* to **6***e* illustrate manufacturing of an implantable valve by forging according to the present invention;

FIGS. **7***a* and **7***b* demonstrate composite valve, which has polyurethane (PU) leaflets and PET tubular-crown shaped construction, according to the present invention;

FIGS. **8***a* and **8***b* depict a manufacture process of a composite valve made of flexible PU leaflets, rigid PU construction for mounting and a PET tubular end;

FIGS. **9** to **9***i* demonstrate different methods of attachment between the valve and stent according to the present invention;

FIG. **10** illustrates a dipping mandrel with an extra portion, which improves the sealing ability of the valve, according to the present invention;

FIG **11***a* to **11***c* illustrate a valve mounted on a stent with an extra support, which improves the force distribution on the valve material and facilitates prolonged durability of the valve, according to the present invention;

FIGS. **12***a* to **12***c* depict a valve with rigid supports according to the present invention, located substantially in the center of its leaflets. This design allows the valve leaflets to perform without outer support;

FIGS. **13***a* to **13***c* illustrate the manufacturing of a reinforced PU tube composed of strong fiber from PU, PET or other and a softer PU coating, for serving as the supporting structure;

FIGS. **14** and **14***a* to **14***c* demonstrate incorporation of heavy metal markers on the stent, according to the present invention. These markers allow orientation control while positioning the device at the required location;

FIGS. **15***a* to **15***c* demonstrate a valve with radio-opaque coating, according to the present invention, which allows imaging of the valve motion under angiogram;

FIGS. **16***a* to **16***c* illustrate a procedure, which helps in accurate positioning the valve device with respect to the longitudinal orientation;

FIGS. **17***a* and **17***b* describe a valve device according to the present invention, comprising one valve assembly mounted on a stent and an additional portion with a stent only. This allows placing the device in a way that coronaries are not blocked, longitudinal positioning thus becomes less sensitive and the extra stent decreases the risk of device migration within the vasculature;

FIGS. **18***a* and **18***b* demonstrate a crimping device according to the present invention, which can crimp a valve device in the operating theater as part of the implantation procedure;

FIGS. **19***a* to **19***c* depict a crimping machine according to the present invention, similar to the one described in FIG. **18** with a different mechanical method;

FIGS. **20***a* and **20***b* demonstrate a valve according to the present invention, made of a tube mounted on a stent. During systole the tube is fully open and during diastole the tube collapses according to the mounting geometry providing tight sealing;

FIG. **21** depicts a stent structure according to the present invention, with built-in mounting portions of constant length, which allow valve mounting;

FIG. **22** depicts yet another preferred embodiment a valve assembly in accordance with the present invention, having dilated supports;

FIGS. **23***a* to **23***e* depict stages in a method of manufacturing an implantable prosthetic valve in accordance with another preferred embodiment of the present invention;

FIGS. **24***a* to **24***c* illustrate a support frame of an implantable prosthetic valve having means for mounting valve leaflets in accordance with a preferred embodiment of the present invention that can form a tricuspid valve. FIG. **24***a* depicts an isometric view of the frame, and FIG. **24***b* depicts a cross-sectional view of the means for mounting a valve leaflet in details, provided with a valve leaflet. FIG. **24***c* depicts further details of attachment means for the attachment method;

FIGS. **25***a* to **25***d* illustrate an implantable prosthetic valve in accordance with another preferred embodiment of the present invention. FIGS. **25***a* and **25***b* depict an isometric view and an upper view of the valve assembly, respectively, and FIGS. **25***c* and **25***d* illustrate upper views of two optional constructions for the means for mounting leaflets;

FIGS. **26***a* to **26***c* illustrate a tricuspid valve in accordance with yet another preferred embodiment of the present invention, provided with a self-expandable frame. FIG. **26***a* is the valve in its fully expanded diameter, FIG. **26***b* is a tapered tool which assists in inserting the valve into an introducing tube, and FIG. **26***c* shows the valve assembly inside a restriction tube, ready to be inserted into a introducing sheath;

FIG. **27** illustrates an isometric view of an implantable prosthetic valve in accordance with another preferred embodiment of the present invention having hooks designated to anchor the valve assembly to body ducts;

FIG. **28** illustrates a partial view of an implantable prosthetic valve in accordance with yet another preferred embodiment of the present invention. The commissural attachment is showed in details;

FIGS. **29***a* and **29***b* illustrate an isometric view and an upper cross-sectional view, respectively, of an attachment assembly of a valve's frame to leaflets in accordance with a preferred embodiment of the present invention;

FIGS. **30***a* to **30***c* illustrate an isometric view, a cross-sectional view and a flattened view, respectively, of an attachment assembly of a valves frame to leaflets in accordance with another preferred embodiment of the present invention. FIG. **30***c* is a side view showing two pieces of pericardium before the attachment to the frame;

FIGS. **31***a* and **31***b* illustrate an exploded view and an isometric view, respectively, of a commissural attachment in accordance with a preferred embodiment of the present invention depicting the attachment technique;

FIGS. **32***a* to **32***c* illustrate an isometric view of an attachment between leaflets and the frame in accordance with yet another preferred embodiment of the present invention;

FIGS. **33***a* to **33***d* illustrate different views and portions of an attachment between a pericardium and a frame in accordance with yet another preferred embodiment of the present invention, demonstrating another method of attachment in accordance with the preferred embodiment;

FIGS. **34***a* to **34***c* illustrate an isometric view of an attachment between a pericardium and a valve in accordance with yet another preferred embodiment of the present invention demonstrating another method of attachment. In FIGS. **34***b* and **34***c*, a deployed portion and the folded portion, respectively, are shown;

FIGS. **35***a* to **35***c* illustrate an isometric and cross-sectional upper views, respectively, of attachment techniques between a pericardium leaflet and a valve's frame in accordance with another preferred embodiment of the present invention;

FIGS. **36***a* and **35***b* illustrate an isometric view of a commissural assembly in accordance with a preferred embodiment of the present invention demonstrating a method of forming one;

FIGS. **37***a* to **37***c* illustrates a commissural assembly in accordance with another preferred embodiment of the present

invention, where the connecting bar functions as a flexible support and has integral attachment means to the frame. FIG. **37***b* is an isometric view of the connecting bar;

FIGS. **38***a* to **38***g* illustrate isometric views of flexible commissural supports and the method of attaching them to a pericardium and a frame and valve in accordance with preferred embodiments of the present invention;

FIGS. **39***a* and **39***b* illustrate an isometric view of a commissural attachment in accordance with yet another preferred embodiment of the present invention, demonstrating the attachment of the pericardium to the support by means of a shaped compressing member;

FIGS. **40***a* to **40***c* illustrate an isometric view of a bicuspid valve mounted on a frame in accordance with yet another preferred embodiment of the present invention. FIGS. **40***b* and **40***c* depicts a cross-sectional side view and an isometric view, respectively, of the pericardium that is sutured to a PET tube in the form of pockets;

FIGS. **41***a* to **41***d* illustrate isometric views of an implantable prosthesis tricuspid valve in accordance with yet another preferred embodiment of the present invention;

FIGS. **42***a* and **42***b* illustrate an isometric view of an implantable prosthetic valve in accordance with yet another preferred embodiment of the present invention, having a different commissural attachment. FIG. **42***b* depicts the attachment in details;

FIGS. **43***a* and **43***b* illustrate an isometric view of an implantable prosthetic valve in accordance with yet another preferred embodiment of the present invention. FIG. **43***a* depicts the commissure that are pre-sutured in a tapered shape;

FIGS. **44***a* to **44***c* illustrate an isometric view of an implantable prosthetic valve in accordance with yet another preferred embodiment of the present invention, with additional pieces of PET used for sealing and protecting the pericardium;

FIGS. **45***a* to **45***d* illustrate an isometric view of an implantable prosthetic valve in accordance with yet another preferred embodiment of the present invention, having leaflets sutured to a pre-shaped PET tube and optional leaflet-tube attachments in details;

FIGS. **46***a* and **46***b* illustrate an exploded view and an upper cross-sectional view of an implantable prosthetic valve assembly in accordance with yet another preferred embodiment of the present invention;

FIGS. **47***a* to **47***c* illustrate a partial cross-sectional side view of an inflating balloon in accordance with a preferred embodiment of the present invention. The balloon is a part of an implantable prosthetic valve delivery system. FIGS. **47***b* and **47***c* are cross sectional upper views in the inflated and deflated positions, respectively; and

FIGS. **48***a* and **48***b* illustrate a partial cross-sectional side view and an upper cross-sectional view of an inflating balloon in accordance with another preferred embodiment of the present invention.

DETAILED DESCRIPTION OF THE INVENTION

A main aspect of the present invention is the introduction of several novel designs for an implantable prosthetic valve. Another aspect of the present invention is the disclosure of several manufacturing methods for implantable prosthetic valves in accordance with the present invention. A further aspect of the present invention is the provision of novel deployment and positioning techniques suitable for the valve of the present invention.

Basically the implantable prosthetic valve of the present invention comprises a leafed-valve assembly, preferably tricuspid but not limited to tricuspid valves only, consisting of a conduit having an inlet end and an outlet, made of pliant material arranged so as to present collapsible walls at the outlet. The valve assembly is mounted on a support structure such as a stent adapted to be positioned at a target location within the body duct and deploy the valve assembly by the use of deploying means, such as a balloon catheter or similar devices. In embodiments suitable for safe and convenient percutaneous positioning and deployment the annular frame is able to be posed in two positions, a crimped position where the conduit passage cross-section presented is small so as to permit advancing the device towards its target location, and a deployed position where the frame is radial extended by forces exerted from within (by deploying means) so as to provide support against the body duct wall, secure the valve in position and open itself so as to allow flow through the conduit.

The valve assembly can be made from biological matter, such as a natural tissue, pericardial tissue or other biological tissue. Alternatively, the valve assembly may be made form biocompatible polymers or similar materials. Homograph biological valves need occasional replacement (usually within 5 to 14 years), and this is a consideration the surgeon must take into account when selecting the proper valve implant according to the patient type. Mechanical valves, which have better durability qualities, carry the associated risk of long-term anticoagulation treatment.

The frame can be made from shape memory alloys such as nickel titanium (nickel titanium shape memory alloys, or NiTi, as marketed, for example, under the brand name Nitinol), or other biocompatible metals. The percutaneously implantable embodiment of the implantable valve of the present invention has to be suitable for crimping into a narrow configuration for positioning and expandable to a wider, deployed configuration so as to anchor in position in the desired target location.

The support stent is preferably annular, but may be provided in other shapes too, depending on the cross-section shape of the desired target location passage.

Manufacturing of the implantable prosthetic valve of the present invention can be done in various methods, by using pericardium or, for example, by using artificial materials made by dipping, injection, electrospinning, rotation, ironing, or pressing.

The attachment of the valve assembly to the support stent can be accomplished in several ways, such as by sewing it to several anchoring points on the support frame or stent, or riveting it, pinning it, adhering it, or welding it, to provide a valve assembly that is cast or molded over the support frame or stent, or use any other suitable way of attachment.

To prevent leakage from the inlet it is optionally possible to roll up some slack wall of the inlet over the edge of the frame so as to present rolled-up sleeve-like portion at the inlet.

Furthermore, floating supports may be added to enhance the stability of the device and prevent it from turning inside out.

An important aspect of certain embodiments of the present invention is the provision of rigid support beams incorporated with the support stent that retains its longitudinal dimension while the entire support stent may be longitudinally or laterally extended.

The aforementioned embodiments as well as other embodiments, manufacturing methods, different designs and different types of devices are discussed and explained below with reference to the accompanying drawings. Note that the drawings are only given for the purpose of understanding the present invention and presenting some preferred embodi-

ments of the present invention, but this does in no way limit the scope of the present invention as defined in the appended claims.

Reference is now made to FIG. **1**, which illustrates a general tricuspid implantable prosthetic valve **20** in accordance with a preferred embodiment of the present invention, suitable for percutaneous deployment using an expandable stent or similar deploying means, shown in its deployed position. A valve assembly **28** comprises a conduit having an inlet **24** and an outlet **26**, the outlet walls consisting of collapsible pliant material **29** that is arranged to collapse in a tricuspid arrangement. The valve assembly **28** is attached to an annular support stent **22**, the one in this figure being a net-like frame designed to be adapted to crimp evenly so as to present a narrow configuration and be radially deployable so as to extend to occupy the passage at the target location for implantation in a body duct. Support beams **23** are provided on annular support stent **22** to provide anchorage to valve assembly **28**. Support beams **23** are optionally provided with bores **25** to allow stitching of valve assembly **28** to support beams **23** by thread, wires, or other attachment means.

In the embodiment shown in FIG. **1**, a cuff portion **21** of the valve assembly **28** is wrapped around support stent **22** at inlet **24** to enhance the stability. Preferably cuff portion **21** of valve material **28** is attached to support beams **23**.

Note that the entire valve structure is adapted to be radially crimped and radially expanded, and this lends to provide ease of navigation through narrow passages in the vasculature during positioning of the device and adequate deployment on the final location. This is made possible by the provision of a collapsible support stent structure. However, the support beams remain at all times constant at their length and thus are suitable for serving as the pliable valve assembly's anchorage. The valve assembly is attached to the support stent at the support beams, and due to their constant length there is no need for slack material as the attachment points (**25**) remain at constant distances regardless of the position of the valve device (crimped or deployed). This is an important feature for this means that the manufacturer of the valve device can make sure the valve assembly is secured and fastened to the support stent at all times. In prior art implantable valve devices the entire support structure changes its dimensions from its initial first crimped position and final deployed position, and this means that in the attachment of the valve assembly to the support structure one must take into consideration these dimension changes and leave slack material so that upon deployment of the device the valve assembly does not tear or deform. In the valve device of the present invention there is no relative movement between the valve assembly and the support beams (along the longitudinal central axis of the device). As a result, the valve device of the present invention acquires greater durability and is capable of withstanding the harsh conditions prevailing within the vasculature and especially the millions of cycles of stress applied by the blood pressure.

The fixed attachment of the valve assembly to the support stent in the valve device of the present invention results in greater stability, enhanced safety, better sealing and consequently longer lifespan. The novel design of the valve device of the present invention leads to longitudinal strength and rigidity whereas its collapsible support structure results in radial flexibility.

FIG. **2** depicts an implantable valve **30** mounted on a deployable stent **32**. The valve assembly **34** is attached to the deployable support stent **32** (dotted lines) along three substantially equidistant and substantially parallel support beams **40** of constant length, which are part of stent **32**. The attachment of valve assembly **34** to stent **32** is facilitated by the support beams **40** to which valve assembly **34** is stitched with thread or fiber **46** (through bores **42** of support beams **40**). Outlet leafs **38**, which are a slack portion of the valve assembly, dangle inwardly, and the whole device is carried by an inflatable balloon **48**, which serves as the deploying device. A portion of the valve assembly **34** at an inlet zone **45** is optionally rolled over support stent **32** at the inlet, making up a rolled sleeve, which enhances the sealing of the device at the valve inlet.

FIG. **3** demonstrates an implantable valve mounted to a stent **50** with an inflatable balloon **52**, in a crimped position. The support stent **50** is initially crimped about the balloon **52** so that is presents a narrow cross-section and is thus suitable for percutaneous catheterization and deployment.

FIG. **4** depicts an implantable valve deployment in a natural aortic valve position. The implantable valve is advanced while mounted over the balloon **52** until it reaches the desired target location **54** in a body duct, for example, aorta **56**. The balloon is inflated and the support stent **50** expands radially to take up its position.

FIG. **5** demonstrates the manufacture of a polyurethane valve in a dipping technique. A dipping mandrel **60** is provided with a tubular portion **62** with surfaces **64** that correspond to the collapsible valve leaflets to be manufactured. Mandrel **60** is dipped into a dissolved polyurethane bath **66** and is coated with a polyurethane coating in the desired form of the valve. Then, after the polyurethane coating has hardened sufficiently, the completed valve is removed from mandrel **60**.

FIGS. **6***a* to **6***e* illustrate manufacturing an implantable valve by forging. A suitable tubularly shaped material **74** is placed tightly on a tubular portion **68** of mandrel **67**, covering the cusp portion **69**. Flexible inserts **76** are pressed to mandrel **67**, forging the tubular material to mandrel shape **80**. A tapered ring **70** holds the flexible inserts in place as the whole mold is placed in a hot oven regulated to a desired temperature, which is lower than the material's melting point. FIG. **6***e* illustrates a sectional side view of the mandrel and a cross cut portion of the mold. The mold is made to press inwardly on the mandrel, which is covered with the valve material. As a result the material takes up the desired shape. The materials used can vary, for example, polyurethane (PU), polyethylene terphthalate (PET), or any other suitable material, which may be formed by heating.

FIGS. **7***a* and **7***b* demonstrate a method of manufacturing a composite valve, which has PU leaflets and PET tubular construction with a crown shape. PU is an excellent fatigue resistant material but is sensitive to tear. The PU is reinforced by the PET crown to allow safe attachment to a stent by means of stitching, riveting, or any other suitable attachment method. A PET crown **86** is placed on a mandrel **87**, which is then (turned and) dipped in a container of dissolved PU. The manufactured device is a valve assembly having leaflets **88** composed of pure PU, and thus fatigue resistant, and a main body made of PET with protruding attachment portions **90** suitable for attachment built in the PU.

FIGS. **8***a* and **8***b* demonstrate a method of manufacturing a composite valve, which is based on flexible PU **92** for as the main body of the valve, rigid PU support beams **94** serving for the attachment area, and PET sleeve **96** portions for the valve inlet. The need for a rigid portion for attachment (support beams **94**) is explained by the tendency of the flexible, fatigue resistant material to tear as already explained. The advantage of the stiff PU support beams is that they are chemically adhered to the main body, and this improves the overall durability of the valve due to reduction of inner forces and friction in the attachment area specially attachment between two dif-

ferent materials. The valve is dipped in the method mentioned with reference to FIG. **5**, and the rigid PU support beam **94** is created by way of mold injection, machining or any other suitable way. The rigid PU support beam **94** is placed on the valve and then dipped into the container of dissolved PU. This is done while the valve is positioned on the mandrel (not shown). This method provides the ability to composite several materials into one body and, by that, gain the advantage of the various properties of the materials as they are needed in different areas of the prosthesis.

FIGS. **9** to **9***i* demonstrate different methods of attachment between a valve assembly and the support stents. A valve assembly **99** shown in FIG. **9** is incorporated into valve **100** shown in FIG. **9***a*, where a support stent **102** is attached to valve assembly **99** through support beam **106**. A detail is shown in FIG. **9***b*, where, in cross-section, it can be seen that layer **108** is an optional inner support made of stainless steel or rigid polymeric material, valve assembly **99** comprises a PET layer **105** coated with a PU layer **104**, with the outer support beam **106**. Connector **107** is a connecting wire made of a strong material, such as stainless steel. FIG. **9***c* illustrates an alternative arrangement for attachment by a rivet **109**, and in FIG. **9***d* the attachment is achieved by a suture **110**.

FIGS. **9***e* to **9***g* show an attachment method comprising shaped rigid members **116**, preferably made from metal, which tightly hold the PU valve material **118** by fitting in between a PU U-shaped nest **120** and are attached to a stent **122** by extruding portions **124** that are provided on U-shaped rigid member **116**, which fit the bores **126** of the support beam **128** of the stent **122**. FIGS. **9***h* and **9***i* show another attachment method, where rigid support beams in the form of frame construction **132** are provided, and the valve assembly pliant material **135** made of a tubular material is inserted through a gap **137** in the frame. After insertion, a fastening rod **133** is inserted through the pocket formed between the pliant material and the frame and holds the valve in position.

FIG. **10** illustrates a dipping mandrel **139** with an extending portion **141**, which improves the sealing ability of the valve. Since the valve is attached to a collapsible stent and is itself collapsible, it is difficult to determine the exact shape of the valve after crimping and deploying. It is of major importance that sealing will be achieved. By adding the extension **141** the leaflets are made longer than needed to exactly close the outlet, and therefore when they are in the collapsed state, substantial portions of the leaflets fall on each other creating better sealing.

FIGS. **11***a* to **11***c* illustrate a valve assembly mounted on a support stent **144** with interlaced strengthening wire **146**, which improves the force distribution on the valve material and facilitates prolonged durability of the valve. The support is in the form of a wire, which has a crown shape as the shape of the three cusp valve base **148**, it also has the ability to be crimped **150** to a small diameter, together with the stent, valve and balloon, as shown in FIG. **11***b*. The forces applied to the valve edge **148** while working, are applied to the attachment points, by making the attachment line longer we reduce the force on each attachment point. In this support method the valve is attached by suturing **152** the entire line to the extra support wire **146**. This wire can be made of stainless steel, nickel titanium alloy such as nitinol, or polymeric material. The support suture renders the valve assembly default fault lines where the valve material more readily flexes, thus ensuring proper operation of the valve flaps (leaflets). Optionally the valve assembly shown in FIGS. **11***a* to **11***c* can be mounted on a support stent such as the one described herein or similar supporting structures. The strengthening wire is interlaced in the valve assembly at the outlet of the conduit so as to define a fault line about which the collapsible slack portion **154** of the valve assembly may flap.

FIGS. **12***a* to **12***c* depict a valve device provided with a stent **159** and substantially equidistant rigid support beams **160**, interlaced or attached to the slack portion of the valve assembly material **161**, arranged longitudinally. This design allows the valve leaflets to perform without outer support. The support in standard valves is by tying the upper edge of the cusp to a rigid embodiment, so that it reacts to the load as a suspension bridge. In this new design the prevention of collapsing is achieved similar to an Indian tent, i.e., the rigid supports lean on each other **162** when the valve is closed but do not interfere in opening **164** when the valve is open.

FIGS. **13***a* to **13***c* illustrate the manufacturing of a valve assembly in accordance with another preferred embodiment of the present invention. At first a polyurethane thread line **170** is fed from a PU supply **172**, and coiled around a cylindrical drum **174** to form coil **176**. Then, drum **174** with coil **176** is dipped in a PU bath **177**, and a second layer **178** of the PU coats coil **176**, making it a stronger construction capable of withstanding tearing forces both laterally and in other directions. Incorporating two different types of materials—such as PU and PET—may render greater durability and endurance to the valve assembly. This material is an alternative material to be used in the forging method shown in FIG. **6**.

FIGS. **14** to **14***c* demonstrate the incorporation of heavy metal markers on the stent, which markers allow observation and thereby adjustment of orientation while placing the device in the required location. Heavy metals are radiopaque, that is, they are conspicuous on an angioscopic image, which is a two-dimensional image. Since the coronary artery ostia **237** and **238** are located near the typical valve deployment location and must stay open, it is extremely important to make sure that the deployed valve assembly is not blocking a coronary ostium. In some cases the stent is lower than the ostium and in those cases it will stay open, but in some cases as shown in these figures it is necessary to make sure that the stent portion **239** that is connecting the valve supports **235** is opposite the coronary ostia, and in that way the blood supply is preserved through the stent struts. Two heavy metal markers **232** are attached at the outlet side, one marker **230** at the inlet side. It is possible to adjust the angiogscopic view to the plane of the left coronary as shown in FIG. **14***b* and anatomically locate the other accordingly. If the two upper markers **232** are placed in the radiographic two dimensional image, one on top of the other, and the low marker **230** on the opposite side, we make sure that the coronaries are open to blood flow as seen in FIG. **14***c*. Gold, platinum, iridium or tantalum are all biocompatible materials suitable for the markers described above.

FIGS. **15***a* to **15***c* illustrate a valve with a portion of radiopaque material **267** such as a thread of gold at the sealing edge. When a valve is implanted, it is very important to have clear indications of how the valve is functioning in vivo; pressure measurements, flow visualization, and doppler measurements are utilized. It is also possible to examine the valve by ultrasound methods, however, observing the opening and closing of the valve cusps on a monitor. FIG. **15***b* is an angiographic image **268** of the open valve, while image **169** in FIG. **15***c* is the closed position as seen on the angiogram.

FIGS. **16***a* to **16***c* illustrate a procedure, which helps in placing the device in the longitudinal position. It is very important to place the device in the correct longitudinal position, for if it is too deep in the left ventricle it may interfere with the mitral valve function by improper closing or function of the valve. If it is positioned too high it may migrate, it may

leak via the sinus cavities, which are located around it, and/or it may block the coronaries. It is a necessary task to position the valve prosthesis in a narrow target location. In FIG. **14** a method of lateral orientation placement is shown, and FIGS. **16***a* to **16***c* illustrate a longitudinal positioning. The valve device (the valve assembly and the support stent) is placed on an inflatable balloon catheter, comprising double independently inflatable chambers **303**, **305**, and is inserted into the left ventricle **302** in the crimped position and guided over a guiding stylet or guide wire **300**. The balloon, which is larger than the annulus diameter when inflated, is inflated in the left ventricle **302**, and then the whole device is pulled slightly backwards. The balloon is supported on the inner part of the annulus **303**, allowing positioning of the device in the exact desired position. In addition, it temporarily blocks the blood flow, and that improves the ability to hold the device in place while inflating it. The next step is inflating the second balloon **305**, which deploys the valve device in the desired location.

The method for deploying an implantable prosthetic valve device at the natural aortic valve position at the entrance to the left ventricle of a myocardium of a patient, as depicted in FIGS. **16***a*, **16***b* and **16***c*, comprises the steps of:

(a) providing a balloon catheter having a proximal end and a distal end, having a first and second independently inflatable portions, the first inflatable portion located at the distal end of the catheter and the second inflatable portion adjacently behind the first inflatable portion;

(b) providing a guiding tool for guiding the balloon catheter in the vasculature of the patient;

(c) providing a deployable implantable valve prosthesis device adapted to be mounted on the second inflatable portion of the balloon catheter

(d) guiding the balloon catheter through the patient's aorta using the guiding tool, the valve device mounted over the second inflatable portion of the balloon catheter until the first inflatable portion of the balloon catheter is inserted into the left ventricle, whereas the second inflatable portion of the balloon catheter is positioned at the natural aortic valve position;

(e) inflating the first inflatable portion of the balloon catheter so as to substantially block blood flow through the natural aortic valve and anchor the distal end of the balloon catheter in position;

(f) inflating the second inflatable portion of the balloon catheter so as to deploy the implantable prosthetic valve device in position at the natural aortic valve position;

(g) deflating the first and second inflatable portions of the balloon catheter; and

(h) retracting the balloon catheter and removing it from the patient's body.

FIG. **17** describes a positioning of a valve device **310** using an additional deployable stent **320**. There are several problems that may be encountered while deploying the stent and valve in the aortic valve location: blockage of coronaries may occur that is dangerous if the diameter of the stent is similar to that of the coronaries aortic root **309**. Secondly, migration of the whole device may also occur, which is a dangerous possibility, and there is the problematic challenge of exact positioning of the valve device that is very difficult to accomplish, as already explained. The newly special designed device with a double diameter inflatable balloon and double stent design allows placement of the device in a way that coronaries will not be blocked because of a safe difference that is kept between the diameters, longitudinal placing is less sensitive because of the small diameter which ensures prevents over expansion of the valved prosthesis. The distal stent **320**, which contains no valve, is expanded into the ascending aorta, while the proximal stent **310** is placed simultaneously in the annular position. This placement method is less challenging due to the smaller diameter of the proximal stent **310** which ensures that the mitral valve is not deformed by over-expansion as the dimensions are preserved, and the additional stent decreases the risk of device migration. It is safer to over dilate in the aorta, which is not true for the annulus.

The method for deploying an implantable prosthetic valve device at the natural aortic valve position at the entrance to the left ventricle of a myocardium of a patient, as depicted in FIGS. **17***a* and **17***b*, comprises the steps of:

(a) providing a balloon catheter having a proximal end and a distal end, having a first and second independently inflatable portions, the first inflatable portion located at the distal end of the catheter and the second inflatable portion adjacently behind the first inflatable portion;

(b) providing a guiding tool for guiding the balloon catheter in the vasculature of the patient;

(c) providing a deployable implantable valve prosthesis device adapted to be mounted on the first inflatable portion of the balloon catheter, and a deployable annular stent device adapted to be mounted over the second inflatable portion of the balloon catheter, the deployable implantable valve prosthesis device and the deployable annular stent kept at a predetermined distant apart;

(d) guiding the balloon catheter through the patient's aorta using the guiding tool, the valve device mounted over the first inflatable portion of the balloon catheter and the deployable annular stent mounted over the second inflatable portion of the balloon catheter, until the first inflatable portion of the balloon catheter is positioned at the natural aortic valve position;

(e) inflating the second inflatable portion of the balloon catheter so that the deployable stent device is deployed within the aorta thus anchoring the deployable annular stent and the coupled valve device in position;

(f) inflating the first inflatable portion of the balloon catheter so as to deploy the implantable prosthetic valve device in position at the natural aortic valve position;

(g) deflating the first and second inflatable portions of the balloon catheter; and

(h) retracting the balloon catheter and removing it from the patient's body.

FIGS. **18***a* and **18***b* illustrate an accessory crimping device that is adapted to crimp a valve device in the operating theater as part of the implantation procedure. The crimping device **330** comprises several adjustable plates that resemble a typical SLR camera variable restrictor. It is comprised of simultaneously movable plates **332** each provided with a blade **334**, that are equally dispersed in a radial symmetry but each plate moves along a line passing off an opening in the center, all plates equidistant from that center opening **336**. Initially (see FIG. **18***a*) the plates are drawn apart providing a large enough opening for the implantable valve to be positioned within that opening. When the plates are drawn towards the center (see FIG. **18***b*), the opening **336** reduces in size but still retains the annular shape, and this facilitates the crimping of the valve frame to a small dimension suitable for percutaneous positioning.

FIGS. **19***a* depicts a crimping method for the support stent of the valve prosthesis device of the present invention, whereby stent **340** is crimped, that is, compressed or curled. In FIG. **19***b* a crimping device **343** is shown, comprising a body having an annular void in which an expanded stent is positioned. Lever **346** is connected to the end **347** of the stent and as the lever is pulled the stent is curled or compressed about axle **345** into a compressed position **349** (FIG. **19***c*).

FIGS. **20***a* and **20***b* depict a valve made of a simple tube mounted to a stent **352**. During systole period the tube is fully open and during diastole period the tube collapses according to the mounting geometry **357** and achieves sealing.

FIG. **21** describes a newly designed support stent **360** in its open position. Three of the longitudinal struts **362** are full and thick and always stay with their original constant size, serving as anchoring support. Each of these struts **362** is provided with a plurality of bores **364**, which are later used for mounting the valve assembly (not shown) and tying it to stent **360**. Between struts **362** a web-like construction is provided, which is capable of being crimped to a narrow state and capable of being deployed again to a wider state.

FIG. **22** illustrates another preferred embodiment of an implantable prosthetic valve according to the present invention. It comprises a metal tube **370**, having three portions with a thicker wall **371** than in the rest of the tube **370**, these areas form the longitudinal columns **372** in the construction, after the tube is cut to its final form. The advantage of such a construction is in its superior bending strength, in specific required portions of the construction, with minimal interference to the crimped volume of the whole construction.

FIG. **23***a* to **23***c* depict a new method of manufacturing an artificial or biological crimpable valve device. A piece of fabric material **370** (FIG. **23***a*), is dipped in PU to create a portion which is later formed into valve leaflets **371** (FIG. **23***b*). This composite material **371** is then attached to an additional piece of fabric such as PET **372** by means of stitching, suturing or other attaching technique **373** (FIG. **23***c*). The resulting fabric **375** is cut along stitching line **373** leaving enough material to later suture the valve assembly to the support construction. It is then formed to a tubular shape and stitched **374** (FIG. **23***d*). The tubular valve is then attached to a support construction **380** by suturing the bottom part around the valve **379** tightly to prevent leakage, and around the cut fabric line **376** (FIG. **23***e*). This open wall structure **378** allows blood flow to the coronary arteries. The valve is later placed with the coronary artery between the support columns **385**. Additional variations of this can be made by replacing the composite material **371/370** with a biological patch such as a suitable pericardium patch. In some cases it is possible to make the same valve without cutting the fabric **372** with the shaped cut **376**, and by that create a valve with an outer tubular shape. The embodiment of FIGS. **23***a* to **23***c* is easy to manufacture as it is generally flat throughout most of the production process and only at the final stage of mounting on the support stent is it given a three-dimensional form.

Reference is now made to FIG. **24***a* illustrating a frame of an implantable prosthetic valve having means for mounting valve leaflets in accordance with a preferred embodiment of the present invention that can form a tricuspid valve. FIG. **24***a* depicts an isometric view of the frame and FIG. **24***b* depicts a cross sectional view of the means for mounting valve leaflets **430** in detail. A frame **420**, which is suitable for crimping and expanding, has three support beams **422** for mounting leaflets positioned substantially symmetrically about the circumference of the frame. Frame **420** is shown in FIG. **24***a* in its deployed state. Support beam **422** has a "U" shaped lateral cross section, or profile (shown clearly in FIG. **24***b*) that is designed to attach to a commissure of the valve structure. The "U" shape can be produced by extrusion, wire cutting or by welding the "U" profile to the frame's struts **421** at junction points **424**. Support beam **422** is provided with a series of bores **425** positioned along its back wall. Bores **425** are designated for stitching the valve assembly by threads, wires, or other attaching means.

FIG. **24***b* is a detailed cross-sectional view of one of the support beam **422**. Two pericardial leaflets **430** are inserted through a U-shaped, or forked holder **428** that compresses and restricts the leaflets in the U-shaped profile. Leaflets **430** are folded to both sides of the support beam **422**. When holder **428** is compressed toward the support beam **422**, leaflets **430** are caught in-between holder **428** and support beam **422** so that the leaflets are kept in place. FIG. **24***c* is an exploded view of the holder, bar **426** has a series of bores compatible for attachment to the frames support beam **422**, attachment being achieved by suture **423** or any other attachment means. This attachment method allows attaching the leaflets to the frame without puncturing it with sutures and needles. It is also important that the leaflets are firmly held in place by the holder **428** so that it has no relative movement in respect to the rigid frame; hence avoiding wear due to movements. Leaflets that are made from pericardium are known to better withstand inner movements and stresses and less to wear by movement against rigid, hard or sharp bodies.

It is noted again that the entire valve structure is adapted to be radially crimped and radially expanded. This feature imparts the valve with the ability and ease to navigate through narrow passages in the vasculature during positioning of the device. After final positioning of the valve, the valve is deployed. This is made possible by the provision of a collapsible support frame structure. However, the length of the attaching means (the height of the valve) remains at all times constant; thus suitable for serving as the pliable valve assembly's anchorage. The leaflets are attached to the support frame at the attaching means, and due to their constant length there is no need for slack material as these attachment points that remain at constant distances regardless of the position of the valve assembly (crimped or deployed). This is an important feature for this means that the manufacturer of the valve device can make sure the valve assembly is secured and fastened to the support frame at all times. In prior art implantable valve devices, the entire support structure changes its dimensions from its initial first crimped position to final deployed position and this means that in the attachment of the valve leaflets to the support structure one must take into consideration these dimension changes and leave slack material so that upon deployment of the device, the valve assembly does not tear or deform. In the valve device of the present invention there is no relative movement between the valve leaflets and the support beams (along the longitudinal central axis of the device). As a result, the valve device of the present invention acquires greater durability and is capable of withstanding the harsh conditions prevailing within the vasculature and especially the millions of cycles of stress applied by the blood pressure.

The fixed attachment of the valve leaflets to the support frame in the valve assembly device of the present invention renders it greater stability, enhanced safety, better sealing and consequently longer lifespan. The novel design of the valve device of the present invention renders it longitudinal strength and rigidity whereas its collapsible support structure renders it radial flexibility.

FIGS. **25***a* to **25***d* illustrate an implantable prosthetic valve in accordance with another preferred embodiment of the present invention. FIGS. **25***a* and **25***b* depict an isometric view and an upper view of the valve assembly, respectively and FIGS. **25***c* and **25***d* illustrate upper views of two optional constructions for the means for mounting leaflets. Pericardial leaflets **430** are mounted on a deployable support frame **432**. The frame is preferably made of three segments that form a circular support frame when assembled (FIG. **25***b*). Pericardial leaflets **430** are attached to deployable support frame **432**

along three substantially equidistant and substantially parallel beams **440**, which are integral parts of support frame **432**. Leaflets **430** are attached to support frame **32** at support beams **440** by suturing **446** leaflets **446** to support beams **440** through bores **442** in beams. The frame segments that are preferably made from stainless steel are pre-shaped **432** and can be formed in different ways. FIG. **25***c* illustrates support frame segments **432***a* having beams **435***a* pointing inwardly. FIG. **25***d* illustrates support frame segments **432***b* having beams **435***b* that are outwardly pointing. The advantages of this technique are the possibility to manufacture the frame segments from sheets (as opposed to tube) and the ease of assembly of the frame segments with the pericardial leaflets.

FIGS. **26***a* to **26***c* illustrate a tricuspid valve in accordance with yet another preferred embodiment of the present invention, provided with a self-expandable frame. FIG. **26***a* is an isometric view of an implantable prosthetic valve **430** mounted on a self-expandable frame **445**. Implantable prosthetic valve **430** comprised of three valve leaflets is mounted on self-expandable frame **445** so that each leaflet extends along an equidistant portion of the frame and is sutured at both opposite sides to substantially equidistant and substantially parallel beams **440**. By using a tapered tube **448** the whole assembly is crimped into a restriction tube **449**. FIG. **26***b* shows the crimped valve assembly **447** in its final crimped diameter ready for insertion to the body. After insertion into the desired location in the body the valve is released from the restriction tube and as it is made of self expandable material (like a shape-memory alloy), it expands back to the original diameter and is anchored in place. In order to reduce the diameter of the device from its fully expanded diameter to its crimped diameter a special tapered tube is used, shown in FIG. **26***c*.

FIG. **27** illustrates an isometric view of an implantable prosthetic valve in accordance with another preferred embodiment of the present invention having hooks designated to anchor the valve assembly to body ducts. An implantable prosthetic valve **450** is placed in a natural aortic valve position **452**. Implantable prosthetic valve **450** comprises preferably three leaflets **430** mounted on a metallic support frame **455**. The lower part of support frame **455** is provided with attachment means, preferably with hooks **453**. Hooks **453** assures that the valve assembly stays in place after deployment, and cannot migrate to another position.

FIG. **28** illustrates a partial view of an implantable prosthetic valve in accordance with yet another preferred embodiment of the present invention. The commissural attachment is shown in details. This figure demonstrates an attachment technique that is used in order to attach pericardium leaflet **430** to a metallic frame **420**. A longitudinal bar **456** having a narrow slit **457** is used as the commissural attachment so that extensions **463** of pericardium leaflet **430** are tightly inserted through slit **457**. Pericardium extensions **463** that are extended beyond slit **457** are wrapped about a rigid bar **458** that acts as an anchoring means. Every two extensions originating from two sides of slit **457** are sutured to each other by a suture **459** at the side of rigid bar **458** opposite the slit. An additional suture **462** attaches the bottom circumference of support frame **420** to leaflet **420** in order to obtain sealing. The advantages of the described attachment are that no sutures or suture holes are applied in the leaflet working area, there are no concentrated stress points similar to stress point caused by suturing, and the force distribution is along the longitudinal bar **456**. The narrow passage that is maintained through slit **457** forces the leaflets to be static in respect to the support so as to reduce abrasion.

The embodiments that will be shown herein after are optional configurations of attachment between the leaflets and the support frame.

FIGS. **29***a* and **29***b* illustrate an isometric view and an upper cross sectional view, respectively, of an attachment assembly of a valve's frame to leaflets in accordance with a preferred embodiment of the present invention. The attachment is similar in principle to the attachment shown in FIG. **28**, however, longitudinal bar **456** is further provided with an additional pole **465** that is attached to longitudinal bar **456** so as to establish an integral part. Pole **465** is rounded so as to make sure the leaflets will not be abraded or cut by sharp corners. In the cross sectional view shown in FIG. **29***b*, adjacent leaflets **460** can be seen compressed together and the main protection goal is clearly shown.

FIGS. **30***a* to **30***c* illustrate an isometric view, a cross-sectional view and a flatten view, respectively, of an attachment assembly of a valves frame to leaflets in accordance with another preferred embodiment of the present invention. Using the method demonstrated in FIGS. **30***a* to **30***c*, the pericardial leaflets are pre-cut to the desired shape **430** and are provided with longitudinal bars **470** that are sutured to the leaflets creating a longitudinal clamping effect (FIG. **30***c*). This allows distribution of forces along the whole length of the attachment means as opposed to concentrating the stresses in suture holes. In FIGS. **30***a* and **30***b*, an additional rigid portion **458** is added, creating a round ending, which prevents the leaflets from being bent drastically at the attachment point to portions of the frame **420**. The attachment to frame **420** is performed using sutures **459**.

FIGS. **31***a* and **31***b* illustrate an exploded view and an isometric view, respectively, of a commissural attachment in accordance with a preferred embodiment of the present invention depicting the attachment technique. A method of assembling pericardial leaflets **430** to a frame **420** is demonstrated. A rigid bar **476** provided with integral protrusions **478** is inserted through bores **479** that are pre-cut in pericardial leaflets **430**. Integral protrusions **478** pass through a sheet of preferably PET (braided polyester) fabric **475**, and finally through bores **442** that are provided in longitudinal bar **440** (the attachment means) of frame **420**. After the assembling of the parts, as shown in FIG. **31***b*, the parts are tightly assembled and bar protrusions **478** are attached to bar **440** by welding, riveting or any other technique. The PET sheet **475** is folded and sutured tightly around bar **476** using suture **472**.

FIGS. **32***a* to **32***c* illustrate an isometric view of an attachment between leaflets and the frame in accordance with yet another preferred embodiment of the present invention. An optional method of attachment is demonstrated, in which a pericardium leaflet **430** and bars **480** are sutured in an area as far as possible from the working area of the leaflets. The pericardium is first sutured using a suture **484** to bar **480** as seen in FIG. **32***b*, and then folded and compressed. In order to firmly hold the pericardial leaflets in place between bars **480**, an integral connecting member **482** connects the two bars, allowing the bent portions of the bars to be in parallel position, with the leaflets caught in between. Then, an additional suture **483** connects the bottom side of the bar to the leaflets so that while the valve is working, the leaflets do not bear high stresses.

FIGS. **33***a* to **33***d* illustrate different views of portions of an attachment between a pericardium and a frame in accordance with yet another preferred embodiment of the present invention, demonstrating another method of attachment in accordance with the preferred embodiment. A connecting member **490** (shown in a deployed position in FIG. **33***d*) is used to connect two pericardial leaflets **492** at the line of the commis-

surel. After being connected between them, pericardial leaflets **492** are being connected to frame bar **480**. Here again, the principal of compressing the leaflets between two bent portions bars **491** of connecting member **490** and tightening them using suture **484** without punctures in the working areas of the pericardium is applied. However, connecting member **490** is provided with a portion **493** that is positioned perpendicular to the two bent portions bars **491** that holds the two leaflets together. Portion **493** is the connecting member to frame's bar **480**. In FIG. **33***a*, the junction point **495** between the portions of connecting member **491** is placed at the upper part (outlet) of the frame so as to achieve a rigid connection to the frame. In FIG. **33***b*, junction point **495** is placed at the bottom part (inlet) of the frame so that the junction point also functions as a spring. Comprehensive explanation of the benefits of springs in commissures is discussed and shown in respect with FIGS. **37** to **39**.

FIGS. **34***a* to **34***c* illustrate an isometric view of an attachment between a pericardium and a valve in accordance with yet another preferred embodiment of the present invention demonstrating another method of attachment. In FIGS. **34***b* and **34***c*, a deployed portion and the folded portion, respectively, are shown. An optional design for the attachment between the frame and the leaflets is depicted. A connecting member **480** (shown clearly in FIG. **34***b*) is being produced into a flat configuration using laser-cutting. Connecting member **480**, which is a part of the frame's attachment means, is bent and then is ready for assembly with the leaflets. Connecting member **480** comprises the main body as well as a connection bar **497** and a flexible element **498** allowing flexibility to the commissural. Leaflets **430** are threaded through corresponding holes **481** in the structured connecting member **480** and are sutured using a suture **482**.

Reference is now made to FIGS. **35***a*, **35***b*, and **35***c* illustrating isometric and cross-sectional upper views, respectively, of attachment techniques between a pericardium leaflet and a valve's frame in accordance with other preferred embodiments of the present invention. FIGS. **35***b* and **35***c* depict different techniques of commissural attachments: in FIG. **35***b* two pieces of pericardial leaflets **500** are wrapped around a metallic member **505** that is connected to a frame **501**. Rigid members **503** are positioned from both sides of metallic member **505** and then tightened together and connected by a suture **502**. All metallic pieces are wrapped by PET fabric **508** in order to avoid direct contact between the metallic pieces and the delicate pericardial leaflets. The advantage of this structure is that after tightening the suture, the whole commissure becomes static with no relative movement between the portions. This improves the valve assembly's resistance to abrasion. In addition, there are no needle holes or sutures in the working area. FIG. **35***c* depicts a similar structure, however, there is no use of rigid sidebars. After wrapping the metallic member **505** with pericardial leaflets **500**, a piece of PET **508** is used for tightening it to a tight bundle. In this case, the suture line **502** is the borderline of the working area so it should be designed so that stresses are in the best possible distribution.

FIGS. **36***a* and **35***b* focus on the connection of the commissural assembly to frame's protrusion **509**, which is an integral part of the frame and is the basis for the commissural attachment. This example shows the use of four rigid longitudinal bars **503** connected by a suture **502**.

FIGS. **37***a* to **37***c* illustrate a commissural assembly in accordance with another preferred embodiment of the present invention, where the connecting bar functions as a flexible support and has integral attachment means to the frame. FIG. **37***b* is an isometric view of the connecting bar. Connecting bar **520** is flexible and comprises a resilient material shaped in a "U" shape. Connecting bar **520** is a part of commissural assembly **527** shown in FIG. **37***a*. Connecting bar **520** is provided with protruding elements **521** that are acting as the means of attachment to the frame's bar **480**. Protruding elements are designated to be inserted in corresponding bores **442** in bar **480**. It is optional to provide rods **527** which are integral parts of the "U" shaped member and replace the suture **526** that connects the pericardium leaflet and the connecting bar together, which is shown in FIG. **37***a*. FIG. **37***c* depicts another method of attaching the flexible connecting bar **520** to the frame **480** by means of welding **523**. Here the pericardial leaflets **500** are attached to the connecting bar **520** by suture **526** inserted through a PET fabric **508** and two connecting bars **503**, which together create a tight bundle.

FIGS. **38***a* to **38***g* illustrate isometric views of flexible commissural supports and the method of attaching them to a pericardium and a frame a valve in accordance with preferred embodiments of the present invention. FIGS. **38***a* to **38***c* demonstrate incorporation of different design options of commissural springs. The main purpose of a commissural spring is to reduce the impact applied to the pericardial leaflets when the valve leaflets are closed. If the structure is of a rigid nature, high stress will be applied each time the valve closes. If a spring is added to the structure, the spring will bear the highest portion of the impact, thus reducing the stress applied to the leaflets during the time the valve is closed. In FIG. **38***a*, a simple stainless steel spring **530** is connected to frame's bar **480** by threading a portion of the spring into slots **538** as shown in more detail in FIGS. **38***e* and **38***f*. In FIG. **38***b*, there is a similar spring **530** with leaflets **500** connected to it by one of the attachment methods, the commissural support itself **530** is connected to the frame's bar **480** by spot welding, laser welding or other attachment means. FIG. **38***c* depicts a similar spring **534** having an additional spiral. The purpose of such a spiral is to reduce stress in the spring and to allow the fatigue requirements, which in the case of heart valves are of at least 200 million cycles.

FIG. **38***d* illustrates an isometric view of a flexible commissural support in accordance with yet another preferred embodiment of the present invention, demonstrating the attachment of the pericardium to the support. FIGS. **38***e* to **38***g* are the details of the attachment to the frame. A commissural spring of a different design **539** comprises a stainless steel wire of a small diameter in respect with the springs described in FIGS. **38***a* to **38***c*. One advantage of this structure is the distribution of stresses in the spring and the ability to form a structure, which can be crimped to a small diameter. Another advantage in this structure is that there are no open edges of the spring, which can be dangerous when operated; the open edges are protected in the frame's bar as shown in FIGS. **38***e* to **38***g*, which show possible attachment methods of the spring to the frame. In FIG. **38***e*, a frame's flat bar **480** has slots **531** cut to form slot tabs **538** for crimping the spring **530**. FIG. **38***f* shows pre-bending of the slots **527** and FIG. **38***g* shows the spring legs **539** assembled firmly into the slot tabs **538**.

FIG. **39***a* illustrates a technique of commissural assembly using a shaped compressing member **511**. The compression member **511** holds pericardial leaflets **500** firmly while pressing it in the pivot points **513**. A radial edge **514** is made in order to protect the pericardium from abrasion. The whole assembly is held tightly inside the compressing member **516**. The commissural assembly is connected to the frame by protrusion member **518**, which fit bores in the frames bar **480**. FIG. **39***b* is an isometric view of the same detail.

FIGS. **40***a* to **40***c* illustrate an isometric view of a bicuspid valve mounted on a frame in accordance with yet another preferred embodiment of the present invention. FIGS. **40***b* and **40***c* depict a cross-sectional side view and an isometric view, respectively, of the pericardium that is sutured to a PET tube in the form of pockets. The valve assembly (in this case bicuspid) comprises a crimpable frame **540**, two pericardial leaflets **545**, a PET skirt **543** and a connecting suture **547**. The focus in this drawing is on the pocket shape of the pericardium leaflet shown best in FIGS. **40***b* and **40***c*. One of the main goals in valve design, in general, is to distribute the stresses in a homogenous way in the pericardium material and the attachment areas. The design of the pericardium leaflet as a pocket assists in distributing the stresses along suture line **547**; pericardium leaflet **545** is sutured to PET skirt **543** along connecting suture **547**. PET skirt **543** is sutured to the circumference of crimpable frame **540** at the bottom side **549** and at the top **542** using one of the commissural attachments that are described herein before regarding other embodiments. When hydrodynamic pressure is applied on leaflets **545**, the leaflets will meet in the center **546** of frame **540** so as to seal the valve assembly. The shape of the leaflets in the valve assembly is determined by the boundary conditions, which in this case are the suture lines. The suture lines can be designed to have an optimal shape regarding the stress distribution in accordance with geometrical restrictions.

Reference is now made to FIGS. **41***a* to **41***d* illustrating isometric views of an implantable prosthesis tricuspid valve in accordance with yet another preferred embodiment of the present invention. FIG. **41***a* illustrates valve assembly **553** in an open state. Valve assembly **553** comprises a frame **555** (rigid or crimpable), pericardial leaflets **550** and bars **551**. It is emphasized that in the shown embodiment, the goal is to distribute the stresses on the commissural arrangement in an optimal way. Pericardial leaflets **550** are attached to bars **551** that act as attachment means. The attachment means are positioned at the top third of the valve; the bottom circumference is attached to the frame in order to obtain full sealing. The middle part of the pericardium is left slack. The pre-cut pericardium is cut in greater dimensions than the frame; e.g., the height of the pericardium leaflet is greater than the height of the frame, for example, if the frame height is 15 mm, the pericardium will be cut to a height of 18 mm so as to establish a slack portion in the middle area of the valve assembly **553**. FIG. **41***b* depicts the valve assembly in a closed state. The slack portion of the pericardium collapses toward the middle while creating a small pocket shape **554**, which assists in the stress distribution. FIG. **41***c* shows the detailed commissural and the short bar attachment as well as the circumference sealing area at the bottom portion of the pericardium assembly. It is shown in the figures that bars **551**, which are relatively short, allow firm attachment of the top portion of the commissural, slack portion in the middle, and a good sealing surface at the bottom portion **556**.

Reference is now made to FIGS. **42***a* and **42***b* illustrating an isometric view of an implantable prosthetic valve in accordance with yet another preferred embodiment of the present invention, having a different commissural attachment. FIG. **42***b* depicts the attachment in details. In the embodiment shown in FIG. **42***a*, similar valve assembly is illustrated, while the short bar is arranged in a manner that is similar to the structure shown in FIG. **28** and described herein before. Relatively short bars **559** act as the attachment means to the frame bar **558**. Suture **557** attaches short bars **559** to a member **558**, the suture can be made from an elastic material so that to add flexibility to the commissures and to render the valve assembly the benefits already explained herein.

Reference is now made to FIGS. **43***a* and **43***b* illustrating an isometric view of an implantable prosthetic valve in accordance with yet another preferred embodiment of the present invention. FIG. **43***a* depicts commissures that are pre-sutured in a tapered shape. The valve assembly shown in FIG. **43***a* comprises a frame **560**, pericardial leaflets **563**, and attachment means **561**. Pericardial leaflets **563** are shown to be in an open state so as to establish an open valve assembly while dashed lines **565** show the valve in a closed sealed state. The attachment to the commissures can be performed using one of the explained techniques. Specifically to the embodiment shown in FIGS. **43***a* and **43***b*, the focus is on the formation of a tapered valve in which the attachment means is in the shape of long bars **561** that are attached to the pericardium in an angular way in apposition to the parallel attachment. Attaching the bars in an angular way when the pericardium is flattened will create a tapered tube when built up to the three dimensional shape. When the whole prosthetic valve is inflated by a balloon, the pericardium leaflet, at the top circumference of the frame, is stretched and the frame is expanded to the full diameter. After deflating the balloon, the frame stays in its expended size but the pericardial leaflets regains their pre-stretched shape. This process creates a permanent clearance distance **562** between the pericardial leaflets **563** and frame **560**. This is of major importance in the protection of the pericardium from abrading against the frame.

Reference is now made to FIGS. **44***a* to **44***c* illustrating an isometric view of an implantable prosthetic valve in accordance with yet another preferred embodiment of the present invention, with additional pieces of PET used for sealing and protecting the pericardium. The illustrated implantable valve assembly resembles the valve shown in FIG. **43**, however, it is emphasized that in the attachment of the pericardial leaflets **570** to frame **575**, there is use of PET. FIG. **44***c* shows in a cross-sectional view, the way the PET is assembled to the pericardium and the frame in a manner that protects the pericardium against wear. PET **571** and **572** are used for connecting pericardial leaflets **570** to frame **575**, while they are assembled in between the leaflets and the frame. A suture **577** connects pericardium leaflet **570** in between two layers of PET, while the inner layer of PET **572** is short and the outer layer is longer. Bottom attachment suture **576**, connects the three layers, the leaflet and both PET layers to the frame and forms a strong sealing line. An upper suture **578** connects the outer PET layer **571** to frame **575**. When the valve assembly closes and the pericardial leaflets come closer to each other at the top of the assembly, there is a tendency of the bottom attachment to move and rotate about an attachment point **577**. Upper suture line **578** keeps the outer PET layer tight and prevents a part of this rotational movement, which can rapidly cause an abrasion failure.

FIGS. **45***a* to **45***d* illustrate an isometric view of an implantable prosthetic valve in accordance with yet another preferred embodiment of the present invention, having leaflets sutured to a pre-shaped PET tube and optional leaflet-tube attachments in details. A novel technique of mounting pericardial leaflets **580** to a pre shaped PET tube **585** is shown. The tube is shaped so as to have a folding **586** with substantially sinusoid pattern **586** that is similar to the optimal connection line of valve leaflets in the natural valve. This shape allows the pericardial leaflets to be sutured to the interior of the PET tube. The preferred suturing techniques are shown in the cross sectional views of PET tubes in FIGS. **45***b*, **45***c*, and **45***d*. Generally, in order to protect the pericardial leaflets from

tearing, an additional piece **583** of PET is added below the suture lines. Similar variations are shown in FIGS. **45***c* and **45***d*.

Reference is now made to FIG. **46***a* illustrating an exploded view of an implantable prosthetic valve assembly in accordance with yet another preferred embodiment of the present invention, where the leaflets are mounted on a pre-cut and pre-shaped tube and the outlet of the valve is cut in a commissural shape. FIG. **46***a* is view of the attachment. A pre-shaped PET tube **590** is cut to have substantially sinusoidal shape **596** and then bent in order to provide a suturing area. The pericardium leaflet **593** is pre-cut and assembled to PET tube **590** by means of suturing **502**. In this case as well as in the former case, an additional protective layer of PET or pericardium **594** is added. FIG. **46***b* is a cross-section of the attachment detail after being tightened

FIGS. **47***a* to **47***c* illustrate a partial cross-sectional side view of an inflating balloon in accordance with a preferred embodiment of the present invention. The balloon is a part of an implantable prosthetic valve delivery system. FIGS. **47***b* and **47***c* are cross sectional upper views in the inflated and deflated positions, respectively. The specially designed balloon shown in the figures preferably comprises four inflating members, three substantially identical and symmetrical sections **600** and a central section **602**. Pericardial leaflets **612** are positioned between sections **600** and separate them. A frame **610** circles the inflating members and a balloon shaft **619** that is positioned in the center of the delivery system while a commissural connection **613** connects pericardial leaflets **612** to frame **610**. The inflated balloon sections **600** are placed between frame **610** and pericardial leaflets **612** so that when the inflating members are inflated, they push leaflets **612** toward each other and frame **610** so as to establish a fully closed position. This technique better preserves the leaflets since there is no contact between the leaflets and the frame besides in the commissural connection. The preservation of the leaflets is even improved in times of inflation as well as after inflating the valve and establishing a closed position. In FIG. **47***a* the fourth inflating member of the balloon, central section **602** is clearly shown. Through central section **602**, the inlet **617** of the valve is inflated while the inflated central section assures that the whole valve is fully inflated to substantially round shape. FIG. **47***c* shows the assembly in a crimped position. Frame **610** is crimped and sections **600** are deflated. Pericardial leaflets **612** are also shown in a crimped configuration.

FIGS. **48***a* and **48***b* illustrate a partial cross-sectional side view and an upper cross sectional view of an inflating balloon in accordance with another preferred embodiment of the present invention. The inflating balloon comprises of a central inflating balloon **620** and three protection sheets **622**. In the lateral cross-section shown in FIG. **48***b*, the parts of inflated assembly **625** are clearly shown, protection sheets **622** protects the pericardial leaflets **624** from being pushed against the frame **625** when the device is inflated. The advantage of this arrangement is in the protection of the pericardial leaflets.

The preferred embodiments representing an implantable prosthetic valve in accordance with the present invention are relatively easy to manufacture as they are generally flat throughout most of the production process and only at the final stage of mounting the other elements of the valve assembly on the support frame, a three dimensional form is established.

A typical size of an aortic prosthetic valve is from about 19 to about 25 mm in diameter. A maximal size of a catheter inserted into the femoral artery should be no more than 8 mm in diameter. The present invention introduces a device, which has the ability to change its diameter from about 4 mm to about 25 mm. Artificial valves are not new; however, artificial valves in accordance with the present invention posses the ability to change shape and size for the purpose of delivery and as such are novel. These newly designed valves require new manufacturing methods and technical inventions and improvements, some of which were described herein.

As mentioned earlier, the material of which the valve is made from can be either biological or artificial. In any case new technologies are needed to create such a valve.

To attach the valve to the body, the blood vessels determine the size during delivery, and the requirements for it to work efficiently, there is a need to mount it on a collapsible construction which can be crimped to a small size, be expanded to a larger size, and be strong enough to act as a support for the valve function. This construction, which is in somewhat similar to a large "stent", can be made of different materials such as Nitinol, biocompatible stainless steel, polymeric material or a combination of all. Special requirement for the stent are a subject of some of the embodiments discussed herein.

The mounting of the valve onto a collapsible stent is a new field of problems. New solutions to this problem are described herein.

Another major aspect of the design of the valve of the present invention is the attachment to the body.

In the traditional procedure the valve is sutured in place by a complicated suturing procedure. In the case of the percutaneous procedure there is no direct access to the implantation site therefore different attachment techniques are needed.

Another new problem that is dealt herein is the delivery procedure, which is new and unique. Positioning of the device in the body in an accurate location and orientation requires special marking and measuring methods of the device and surgical site as was disclosed herein.

Artificial polymer valves require special treatment and special conditions when kept on a shelf, as well as a special sterilization procedure. One of the consequences of the shelf treatment is the need to crimp the valve during the implantation procedure. A series of devices and inventions to allow the crimping procedure are disclosed herein.

It should be clear that the description of the embodiments and attached Figures set forth in this specification serves only for a better understanding of the invention, without limiting its scope as covered by the following claims.

It should also be clear that a person skilled in the art, after reading the present specification could make adjustments or amendments to the attached Figures and above described embodiments that would still be covered by the following claims.

The invention claimed is:

1. A valve prosthesis device suitable for implantation in body ducts, the device comprising:

an annular support stent having a crimped configuration suitable for delivery through a body duct and an expanded configuration adapted for engagement with tissue at a target location, the support stent having a circular profile in the expanded configuration, the support stent including a plurality of longitudinally rigid support beams of fixed length and a plurality of annularly spaced expandable web-like constructions extending and connected between the support beams to form the circular profile; and

a valve assembly made of pliant material and having an inlet and an outlet, the valve assembly being an anchored at least in part to the support beams,

whereby, when flow is allowed to pass through the valve prosthesis device from the inlet to the outlet, the valve

assembly is kept in an open position, whereas a reverse flow is prevented as collapsible slack portions of the valve assembly between the support beams collapse inwardly providing blockage to the reverse flow.

2. The device of claim **1**, wherein the support beams are provided with bores for allowing stitching or tying the valve assembly to the support beams.

3. The device of claim **1**, wherein the support stent includes three support beams and the valve assembly has a tricuspid configuration.

4. The device of claim **1**, wherein the valve assembly is made from biocompatible material.

5. The device of claim **4**, wherein the support stent is made from nickel titanium.

6. The device of claim **1**, further comprising at least one radiopaque marker on the support stent.

7. The device of claim **6**, wherein the at least one radiopaque marker on the support stent is made of a heavy metal material.

8. The device of claim **1**, wherein the valve assembly is anchored to both the support beams and web.

9. The device of claim **1**, wherein the valve assembly comprises separate leaflets and further including longitudinal bars separate from the support stent around which ends of each pair of adjacent leaflets roll and attach at the commissures.

10. The device of claim **1**, further including a fabric layer interposed between the valve assembly and support stent and to which both are stitched.

11. The device of claim **10**, wherein the valve assembly has spaced commissure portions attached longitudinally to the support beams of the support stent so as to provide therebetween collapsible slack portions in the pliant material at the outlet.

12. The device of claim **11**, wherein the support beams each has a series of bores formed therein, and wherein valve assembly is stitched to the bores of the support beams.

13. The device of claim **11**, wherein the valve assembly has a tricuspid configuration with three commissures.

14. The device of claim **10**, wherein the valve assembly is made from biocompatible material.

15. The device of claim **14**, wherein the support stent is made from nickel titanium.

16. The device of claim **10**, further comprising at least one radiopaque marker on the support stent.

17. The device of claim **16**, wherein the at least one radiopaque marker on the support stent is made of a heavy metal material.

18. The device of claim **11**, wherein the valve assembly is anchored to both the support beams and web.

19. The device of claim **10**, wherein the valve assembly comprises separate leaflets and further including longitudinal bars separate from the support stent around which ends of each pair of adjacent leaflets roll and attach at the commissures.

20. A valve prosthesis device suitable for implantation in body ducts, the device comprising:

a support stent adapted to be initially crimped in a narrow configuration suitable for delivery through a body duct to a target location and adapted to be deployed to a larger diameter deployed state at the target location, the support stent being tubular and having an axial length in its deployed state and including collapsible and expandable web-like portions extending between and directly connecting a plurality of longitudinally rigid support beams of fixed length distributed around a circumference of the support stent and extending co-extensively with the support stent wherein the web-like portions and support beams are connected at a plurality of locations along the axial length of the support stent;

a valve assembly made of pliant material and having an inlet and an outlet, the valve assembly including a plurality of commissures each of which attaches to a support beam for providing collapsible slack portions between the support beams at the outlet;

whereby, when flow is allowed to pass through the valve prosthesis device from the inlet to the outlet, the valve assembly is kept in an open position, whereas a reverse flow is prevented as the collapsible slack portions of the valve assembly collapse inwardly providing blockage to the reverse flow.

21. The device of claim **20**, wherein the support beams are provided with bores for allowing stitching or tying the valve assembly to the support beams.

22. The device of claim **20**, wherein the valve assembly is stitched to the support beams.

23. The device of claim **20**, wherein the support stent includes three support beams and the valve assembly has a tricuspid configuration.

24. The device of claim **20**, wherein the valve assembly is made from biocompatible material.

25. The device of claim **24**, wherein the support stent is made from nickel titanium.

26. The device of claim **20**, further comprising at least one radiopaque marker on the support stent.

27. The device of claim **26**, wherein the at least one radiopaque marker on the support stent is made of a heavy metal material.

28. The device of claim **20**, wherein the support stent frame further includes a radially collapsible web between adjacent support beams, and wherein the valve assembly is anchored to both the support beams and web.

29. The device of claim **20**, wherein the valve assembly comprises separate leaflets and further including longitudinal bars separate from the support stent around which ends of each pair of adjacent leaflets roll and attach at the commissures.

30. The device of claim **20**, further including a fabric layer interposed between the valve assembly and support stent and to which both are stitched.

31. The device of claim **30**, wherein a portion of the fabric layer forms a cuff that is wrapped around the support stent at an inlet thereof.

* * * * *

Disclaimer

7,510,575 B2 — Benjamin Spenser, Caesarea (IL); Netanel Benichu, Nir Etzion (IL); Assaf Bash, Givat Ada (IL); Avraham Zakai, Zichron Yaacov (IL). IMPLANTABLE PROSTHETIC VALVE. Patent dated March 31, 2009. Disclaimer filed August 11, 2014, by the assignee, Edwards Lifesciences Corporation.

Hereby disclaims term of this patent which shall not extend beyond the expiration date of Patent No. 6,893,460.

(*Official Gazette, October 21, 2014*)

UNITED STATES PATENT AND TRADEMARK OFFICE

CERTIFICATE OF CORRECTION

PATENT NO. : 7,510,575 B2
APPLICATION NO. : 10/637882
DATED : March 31, 2009
INVENTOR(S) : Benjamin Spenser et al.

It is certified that error appears in the above-identified patent and that said Letters Patent is hereby corrected as shown below:

Title Page, item (73) Assignee: should read as follows: Edwards Lifesciences PVT, Inc.,

Signed and Sealed this
Thirtieth Day of December, 2014

Michelle K. Lee

Michelle K. Lee
Deputy Director of the United States Patent and Trademark Office