PTO/AIA/123 (08-12)
Approved for use through 03/31/2021. OMB 0651-0035
U.S. Patent and Trademark Office; U.S. DEPARTMENT OF COMMERCE
Under the Paperwork Reduction Act of 1995, no persons are required to respond to a collection of information unless it displays a valid OMB control number.

CHANGE OF CORRESPONDENCE ADDRESS
Patent

Address to:
Mail Stop Post Issue
Commissioner for Patents
P.O. Box 1450
Alexandria, VA 22313-1450

Patent Number	10,792,172
Issue Date	2020-10-06
Application Number	16/808,137
Filing Date	2020-03-03
First Named Inventor	Ali Shahriari
Attorney Docket Number	426/2/9 UTIL

Please change the Correspondence Address for the above-identified patent to:

☒ The address associated with Customer Number: 171373

OR

☐ **Firm *or* Individual Name**

Address

City | **State** | **ZIP**

Country

Telephone | **Email**

This form cannot be used to change the data associated with a Customer Number. To change the data associated with an existing Customer Number use "Request for Customer Number Data Change" (PTO/SB/124).

This form will not affect any "fee address" provided for the above-identified patent. To change a "fee address" use the "Fee Address Indication Form" (PTO/SB/47).

I am the:

☐ Patentee.

☐ If the Patentee was not the applicant for patent (37 CFR 1.42), then a Statement under 37 CFR 3.73(c) (Form PTO/AIA/96 or equivalent) is enclosed or was filed on _____. See 37 CFR 3.71.

☒ Attorney or agent of record. Registration Number 59389.

☐ Patent practitioner acting in a representative capacity whose correspondence address is the correspondence address of record. Notice has been given to the patentee or owner. Registration Number 59389.

Signature /Justin R. Nifong/

Typed or Printed Name Justin R. Nifong

Date October 29, 2020 | Telephone (919) 348-2194

NOTE: This form must be signed in accordance with 37 CFR 1.33. See 37 CFR 1.4(d) for signature requirements and certifications. Submit multiple forms if more than one signature is required, see below*.

☑ *Total of 1 forms are submitted.

This collection of information is required by 37 CFR 1.33. The information is required to obtain or retain a benefit by the public which is to file (and by the USPTO to process) an application. Confidentiality is governed by 35 U.S.C. 122 and 37 CFR 1.11 and 1.14. This collection is estimated to take 3 minutes to complete, including gathering, preparing, and submitting the completed application form to the USPTO. Time will vary depending upon the individual case. Any comments on the amount of time you require to complete this form and/or suggestions for reducing this burden, should be sent to the Chief Information Officer, U.S. Patent and Trademark Office, U.S. Department of Commerce, P.O. Box 1450, Alexandria, VA 22313-1450. DO NOT SEND FEES OR COMPLETED FORMS TO THIS ADDRESS. **SEND TO: Mail Stop Post Issue, Commissioner for Patents, P.O. Box 1450, Alexandria, VA 22313-1450.**

If you need assistance in completing the form, call 1-800-PTO-9199 and select option 2.

Edwards v. Aortic Innovations
U.S. Patent 11,337,834
Edwards Ex. 1049

Privacy Act Statement

The **Privacy Act of 1974 (P.L. 93-579)** requires that you be given certain information in connection with your submission of the attached form related to a patent application or patent. Accordingly, pursuant to the requirements of the Act, please be advised that: (1) the general authority for the collection of this information is 35 U.S.C. 2(b)(2); (2) furnishing of the information solicited is voluntary; and (3) the principal purpose for which the information is used by the U.S. Patent and Trademark Office is to process and/or examine your submission related to a patent application or patent. If you do not furnish the requested information, the U.S. Patent and Trademark Office may not be able to process and/or examine your submission, which may result in termination of proceedings or abandonment of the application or expiration of the patent.

The information provided by you in this form will be subject to the following routine uses:

1. The information on this form will be treated confidentially to the extent allowed under the Freedom of Information Act (5 U.S.C. 552) and the Privacy Act (5 U.S.C 552a). Records from this system of records may be disclosed to the Department of Justice to determine whether disclosure of these records is required by the Freedom of Information Act.
2. A record from this system of records may be disclosed, as a routine use, in the course of presenting evidence to a court, magistrate, or administrative tribunal, including disclosures to opposing counsel in the course of settlement negotiations.
3. A record in this system of records may be disclosed, as a routine use, to a Member of Congress submitting a request involving an individual, to whom the record pertains, when the individual has requested assistance from the Member with respect to the subject matter of the record.
4. A record in this system of records may be disclosed, as a routine use, to a contractor of the Agency having need for the information in order to perform a contract. Recipients of information shall be required to comply with the requirements of the Privacy Act of 1974, as amended, pursuant to 5 U.S.C. 552a(m).
5. A record related to an International Application filed under the Patent Cooperation Treaty in this system of records may be disclosed, as a routine use, to the International Bureau of the World Intellectual Property Organization, pursuant to the Patent Cooperation Treaty.
6. A record in this system of records may be disclosed, as a routine use, to another federal agency for purposes of National Security review (35 U.S.C. 181) and for review pursuant to the Atomic Energy Act (42 U.S.C. 218(c)).
7. A record from this system of records may be disclosed, as a routine use, to the Administrator, General Services, or his/her designee, during an inspection of records conducted by GSA as part of that agency's responsibility to recommend improvements in records management practices and programs, under authority of 44 U.S.C. 2904 and 2906. Such disclosure shall be made in accordance with the GSA regulations governing inspection of records for this purpose, and any other relevant (*i.e.*, GSA or Commerce) directive. Such disclosure shall not be used to make determinations about individuals.
8. A record from this system of records may be disclosed, as a routine use, to the public after either publication of the application pursuant to 35 U.S.C. 122(b) or issuance of a patent pursuant to 35 U.S.C. 151. Further, a record may be disclosed, subject to the limitations of 37 CFR 1.14, as a routine use, to the public if the record was filed in an application which became abandoned or in which the proceedings were terminated and which application is referenced by either a published application, an application open to public inspection or an issued patent.
9. A record from this system of records may be disclosed, as a routine use, to a Federal, State, or local law enforcement agency, if the USPTO becomes aware of a violation or potential violation of law or regulation.

Electronic Acknowledgement Receipt	
EFS ID:	40993945
Application Number:	16808137
International Application Number:	
Confirmation Number:	1706
Title of Invention:	HEART VALVE REPLACEMENT DEVICE FOR ENDOVASCULAR AORTIC REPAIR AND METHOD OF USING THE SAME
First Named Inventor/Applicant Name:	Ali Shahriari
Customer Number:	171373
Filer:	Justin Robert Nifong/Donna Donovan
Filer Authorized By:	Justin Robert Nifong
Attorney Docket Number:	426/2/9 UTIL
Receipt Date:	30-OCT-2020
Filing Date:	03-MAR-2020
Time Stamp:	11:59:46
Application Type:	Utility under 35 USC 111(a)

Payment information:

Submitted with Payment	no

File Listing:

Document Number	Document Description	File Name	File Size(Bytes)/ Message Digest	Multi Part /.zip	Pages (if appl.)
1	Change of Address	426-2-9UTIL-20201029-Change-of-Address.pdf	259136 2926a103fe7de31ee2e693f52f1d48a346acb772	no	2

Warnings:

Information:	
Total Files Size (in bytes):	259136

This Acknowledgement Receipt evidences receipt on the noted date by the USPTO of the indicated documents, characterized by the applicant, and including page counts, where applicable. It serves as evidence of receipt similar to a Post Card, as described in MPEP 503.

New Applications Under 35 U.S.C. 111
If a new application is being filed and the application includes the necessary components for a filing date (see 37 CFR 1.53(b)-(d) and MPEP 506), a Filing Receipt (37 CFR 1.54) will be issued in due course and the date shown on this Acknowledgement Receipt will establish the filing date of the application.
National Stage of an International Application under 35 U.S.C. 371
If a timely submission to enter the national stage of an international application is compliant with the conditions of 35 U.S.C. 371 and other applicable requirements a Form PCT/DO/EO/903 indicating acceptance of the application as a national stage submission under 35 U.S.C. 371 will be issued in addition to the Filing Receipt, in due course.
New International Application Filed with the USPTO as a Receiving Office
If a new international application is being filed and the international application includes the necessary components for an international filing date (see PCT Article 11 and MPEP 1810), a Notification of the International Application Number and of the International Filing Date (Form PCT/RO/105) will be issued in due course, subject to prescriptions concerning national security, and the date shown on this Acknowledgement Receipt will establish the international filing date of the application.

PTO/AIA/123 (08-12)
Approved for use through 03/31/2021. OMB 0651-0035
U.S. Patent and Trademark Office; U.S. DEPARTMENT OF COMMERCE
Under the Paperwork Reduction Act of 1995, no persons are required to respond to a collection of information unless it displays a valid OMB control number.

CHANGE OF CORRESPONDENCE ADDRESS
Patent

Address to:
Mail Stop Post Issue
Commissioner for Patents
P.O. Box 1450
Alexandria, VA 22313-1450

Patent Number	10,792,172
Issue Date	2020-10-06
Application Number	16/808,137
Filing Date	2020-03-03
First Named Inventor	Ali Shahriari
Attorney Docket Number	426/2/9 UTIL

Please change the Correspondence Address for the above-identified patent to:

☒ The address associated with Customer Number: 175373

OR

☐ **Firm *or* Individual Name**

Address

City | **State** | **ZIP**

Country

Telephone | **Email**

This form cannot be used to change the data associated with a Customer Number. To change the data associated with an existing Customer Number use "Request for Customer Number Data Change" (PTO/SB/124).

This form will not affect any "fee address" provided for the above-identified patent. To change a "fee address" use the "Fee Address Indication Form" (PTO/SB/47).

I am the:

☐ Patentee.

☐ If the Patentee was not the applicant for patent (37 CFR 1.42), then a Statement under 37 CFR 3.73(c) (Form PTO/AIA/96 or equivalent) is enclosed or was filed on _____. See 37 CFR 3.71.

☒ Attorney or agent of record. Registration Number 59389.

☐ Patent practitioner acting in a representative capacity whose correspondence address is the correspondence address of record. Notice has been given to the patentee or owner. Registration Number 59389.

Signature /Justin R. Nifong/

Typed or Printed Name Justin R. Nifong

Date October 30, 2020 | Telephone (919) 348-2194

NOTE: This form must be signed in accordance with 37 CFR 1.33. See 37 CFR 1.4(d) for signature requirements and certifications. Submit multiple forms if more than one signature is required, see below*.

☑ *Total of 1 forms are submitted.

This collection of information is required by 37 CFR 1.33. The information is required to obtain or retain a benefit by the public which is to file (and by the USPTO to process) an application. Confidentiality is governed by 35 U.S.C. 122 and 37 CFR 1.11 and 1.14. This collection is estimated to take 3 minutes to complete, including gathering, preparing, and submitting the completed application form to the USPTO. Time will vary depending upon the individual case. Any comments on the amount of time you require to complete this form and/or suggestions for reducing this burden, should be sent to the Chief Information Officer, U.S. Patent and Trademark Office, U.S. Department of Commerce, P.O. Box 1450, Alexandria, VA 22313-1450. DO NOT SEND FEES OR COMPLETED FORMS TO THIS ADDRESS. **SEND TO: Mail Stop Post Issue, Commissioner for Patents, P.O. Box 1450, Alexandria, VA 22313-1450.**

If you need assistance in completing the form, call 1-800-PTO-9199 and select option 2.

Privacy Act Statement

The **Privacy Act of 1974 (P.L. 93-579)** requires that you be given certain information in connection with your submission of the attached form related to a patent application or patent. Accordingly, pursuant to the requirements of the Act, please be advised that: (1) the general authority for the collection of this information is 35 U.S.C. 2(b)(2); (2) furnishing of the information solicited is voluntary; and (3) the principal purpose for which the information is used by the U.S. Patent and Trademark Office is to process and/or examine your submission related to a patent application or patent. If you do not furnish the requested information, the U.S. Patent and Trademark Office may not be able to process and/or examine your submission, which may result in termination of proceedings or abandonment of the application or expiration of the patent.

The information provided by you in this form will be subject to the following routine uses:

1. The information on this form will be treated confidentially to the extent allowed under the Freedom of Information Act (5 U.S.C. 552) and the Privacy Act (5 U.S.C 552a). Records from this system of records may be disclosed to the Department of Justice to determine whether disclosure of these records is required by the Freedom of Information Act.
2. A record from this system of records may be disclosed, as a routine use, in the course of presenting evidence to a court, magistrate, or administrative tribunal, including disclosures to opposing counsel in the course of settlement negotiations.
3. A record in this system of records may be disclosed, as a routine use, to a Member of Congress submitting a request involving an individual, to whom the record pertains, when the individual has requested assistance from the Member with respect to the subject matter of the record.
4. A record in this system of records may be disclosed, as a routine use, to a contractor of the Agency having need for the information in order to perform a contract. Recipients of information shall be required to comply with the requirements of the Privacy Act of 1974, as amended, pursuant to 5 U.S.C. 552a(m).
5. A record related to an International Application filed under the Patent Cooperation Treaty in this system of records may be disclosed, as a routine use, to the International Bureau of the World Intellectual Property Organization, pursuant to the Patent Cooperation Treaty.
6. A record in this system of records may be disclosed, as a routine use, to another federal agency for purposes of National Security review (35 U.S.C. 181) and for review pursuant to the Atomic Energy Act (42 U.S.C. 218(c)).
7. A record from this system of records may be disclosed, as a routine use, to the Administrator, General Services, or his/her designee, during an inspection of records conducted by GSA as part of that agency's responsibility to recommend improvements in records management practices and programs, under authority of 44 U.S.C. 2904 and 2906. Such disclosure shall be made in accordance with the GSA regulations governing inspection of records for this purpose, and any other relevant (*i.e.*, GSA or Commerce) directive. Such disclosure shall not be used to make determinations about individuals.
8. A record from this system of records may be disclosed, as a routine use, to the public after either publication of the application pursuant to 35 U.S.C. 122(b) or issuance of a patent pursuant to 35 U.S.C. 151. Further, a record may be disclosed, subject to the limitations of 37 CFR 1.14, as a routine use, to the public if the record was filed in an application which became abandoned or in which the proceedings were terminated and which application is referenced by either a published application, an application open to public inspection or an issued patent.
9. A record from this system of records may be disclosed, as a routine use, to a Federal, State, or local law enforcement agency, if the USPTO becomes aware of a violation or potential violation of law or regulation.

Electronic Acknowledgement Receipt	
EFS ID:	40993977
Application Number:	16808137
International Application Number:	
Confirmation Number:	1706
Title of Invention:	HEART VALVE REPLACEMENT DEVICE FOR ENDOVASCULAR AORTIC REPAIR AND METHOD OF USING THE SAME
First Named Inventor/Applicant Name:	Ali Shahriari
Customer Number:	171373
Filer:	Justin Robert Nifong/Donna Donovan
Filer Authorized By:	Justin Robert Nifong
Attorney Docket Number:	426/2/9 UTIL
Receipt Date:	30-OCT-2020
Filing Date:	03-MAR-2020
Time Stamp:	12:01:38
Application Type:	Utility under 35 USC 111(a)

Payment information:

Submitted with Payment	no

File Listing:

Document Number	Document Description	File Name	File Size(Bytes)/ Message Digest	Multi Part /.zip	Pages (if appl.)
1	Change of Address	426-2-9UTIL-20201030-Change-of-Address.pdf	264658 4ed0974082ed5bfbee4476d8749db475b0e991bb	no	2

Warnings:

Information:	
Total Files Size (in bytes):	264658

This Acknowledgement Receipt evidences receipt on the noted date by the USPTO of the indicated documents, characterized by the applicant, and including page counts, where applicable. It serves as evidence of receipt similar to a Post Card, as described in MPEP 503.

New Applications Under 35 U.S.C. 111
If a new application is being filed and the application includes the necessary components for a filing date (see 37 CFR 1.53(b)-(d) and MPEP 506), a Filing Receipt (37 CFR 1.54) will be issued in due course and the date shown on this Acknowledgement Receipt will establish the filing date of the application.
National Stage of an International Application under 35 U.S.C. 371
If a timely submission to enter the national stage of an international application is compliant with the conditions of 35 U.S.C. 371 and other applicable requirements a Form PCT/DO/EO/903 indicating acceptance of the application as a national stage submission under 35 U.S.C. 371 will be issued in addition to the Filing Receipt, in due course.
New International Application Filed with the USPTO as a Receiving Office
If a new international application is being filed and the international application includes the necessary components for an international filing date (see PCT Article 11 and MPEP 1810), a Notification of the International Application Number and of the International Filing Date (Form PCT/RO/105) will be issued in due course, subject to prescriptions concerning national security, and the date shown on this Acknowledgement Receipt will establish the international filing date of the application.

PTO/AIA/123 (08-12)
Approved for use through 03/31/2021. OMB 0651-0035
U.S. Patent and Trademark Office; U.S. DEPARTMENT OF COMMERCE
Under the Paperwork Reduction Act of 1995, no persons are required to respond to a collection of information unless it displays a valid OMB control number.

CHANGE OF CORRESPONDENCE ADDRESS
Patent

Address to:
Mail Stop Post Issue
Commissioner for Patents
P.O. Box 1450
Alexandria, VA 22313-1450

Patent Number	10,792,172
Issue Date	2020-10-06
Application Number	16/808,137
Filing Date	2020-03-03
First Named Inventor	Ali Shahriari
Attorney Docket Number	426/2/9 UTIL

Please change the Correspondence Address for the above-identified patent to:

☒ The address associated with Customer Number: 171373

OR

☐ **Firm *or* Individual Name**

Address

City | **State** | **ZIP**

Country

Telephone | **Email**

This form cannot be used to change the data associated with a Customer Number. To change the data associated with an existing Customer Number use "Request for Customer Number Data Change" (PTO/SB/124).

This form will not affect any "fee address" provided for the above-identified patent. To change a "fee address" use the "Fee Address Indication Form" (PTO/SB/47).

I am the:

☐ Patentee.

☐ If the Patentee was not the applicant for patent (37 CFR 1.42), then a Statement under 37 CFR 3.73(c) (Form PTO/AIA/96 or equivalent) is enclosed or was filed on _____. See 37 CFR 3.71.

☒ Attorney or agent of record. Registration Number 59389.

☐ Patent practitioner acting in a representative capacity whose correspondence address is the correspondence address of record. Notice has been given to the patentee or owner. Registration Number 59389.

Signature /Justin R. Nifong/

Typed or Printed Name Justin R. Nifong

Date October 29, 2020 | Telephone (919) 348-2194

NOTE: This form must be signed in accordance with 37 CFR 1.33. See 37 CFR 1.4(d) for signature requirements and certifications. Submit multiple forms if more than one signature is required, see below*.

☑ *Total of 1 forms are submitted.

This collection of information is required by 37 CFR 1.33. The information is required to obtain or retain a benefit by the public which is to file (and by the USPTO to process) an application. Confidentiality is governed by 35 U.S.C. 122 and 37 CFR 1.11 and 1.14. This collection is estimated to take 3 minutes to complete, including gathering, preparing, and submitting the completed application form to the USPTO. Time will vary depending upon the individual case. Any comments on the amount of time you require to complete this form and/or suggestions for reducing this burden, should be sent to the Chief Information Officer, U.S. Patent and Trademark Office, U.S. Department of Commerce, P.O. Box 1450, Alexandria, VA 22313-1450. DO NOT SEND FEES OR COMPLETED FORMS TO THIS ADDRESS. **SEND TO: Mail Stop Post Issue, Commissioner for Patents, P.O. Box 1450, Alexandria, VA 22313-1450.**

If you need assistance in completing the form, call 1-800-PTO-9199 and select option 2.

Privacy Act Statement

The **Privacy Act of 1974 (P.L. 93-579)** requires that you be given certain information in connection with your submission of the attached form related to a patent application or patent. Accordingly, pursuant to the requirements of the Act, please be advised that: (1) the general authority for the collection of this information is 35 U.S.C. 2(b)(2); (2) furnishing of the information solicited is voluntary; and (3) the principal purpose for which the information is used by the U.S. Patent and Trademark Office is to process and/or examine your submission related to a patent application or patent. If you do not furnish the requested information, the U.S. Patent and Trademark Office may not be able to process and/or examine your submission, which may result in termination of proceedings or abandonment of the application or expiration of the patent.

The information provided by you in this form will be subject to the following routine uses:

1. The information on this form will be treated confidentially to the extent allowed under the Freedom of Information Act (5 U.S.C. 552) and the Privacy Act (5 U.S.C 552a). Records from this system of records may be disclosed to the Department of Justice to determine whether disclosure of these records is required by the Freedom of Information Act.
2. A record from this system of records may be disclosed, as a routine use, in the course of presenting evidence to a court, magistrate, or administrative tribunal, including disclosures to opposing counsel in the course of settlement negotiations.
3. A record in this system of records may be disclosed, as a routine use, to a Member of Congress submitting a request involving an individual, to whom the record pertains, when the individual has requested assistance from the Member with respect to the subject matter of the record.
4. A record in this system of records may be disclosed, as a routine use, to a contractor of the Agency having need for the information in order to perform a contract. Recipients of information shall be required to comply with the requirements of the Privacy Act of 1974, as amended, pursuant to 5 U.S.C. 552a(m).
5. A record related to an International Application filed under the Patent Cooperation Treaty in this system of records may be disclosed, as a routine use, to the International Bureau of the World Intellectual Property Organization, pursuant to the Patent Cooperation Treaty.
6. A record in this system of records may be disclosed, as a routine use, to another federal agency for purposes of National Security review (35 U.S.C. 181) and for review pursuant to the Atomic Energy Act (42 U.S.C. 218(c)).
7. A record from this system of records may be disclosed, as a routine use, to the Administrator, General Services, or his/her designee, during an inspection of records conducted by GSA as part of that agency's responsibility to recommend improvements in records management practices and programs, under authority of 44 U.S.C. 2904 and 2906. Such disclosure shall be made in accordance with the GSA regulations governing inspection of records for this purpose, and any other relevant (*i.e.*, GSA or Commerce) directive. Such disclosure shall not be used to make determinations about individuals.
8. A record from this system of records may be disclosed, as a routine use, to the public after either publication of the application pursuant to 35 U.S.C. 122(b) or issuance of a patent pursuant to 35 U.S.C. 151. Further, a record may be disclosed, subject to the limitations of 37 CFR 1.14, as a routine use, to the public if the record was filed in an application which became abandoned or in which the proceedings were terminated and which application is referenced by either a published application, an application open to public inspection or an issued patent.
9. A record from this system of records may be disclosed, as a routine use, to a Federal, State, or local law enforcement agency, if the USPTO becomes aware of a violation or potential violation of law or regulation.

Electronic Acknowledgement Receipt

EFS ID:	40984298
Application Number:	16808137
International Application Number:	
Confirmation Number:	1706
Title of Invention:	HEART VALVE REPLACEMENT DEVICE FOR ENDOVASCULAR AORTIC REPAIR AND METHOD OF USING THE SAME
First Named Inventor/Applicant Name:	Ali Shahriari
Customer Number:	115007
Filer:	Justin Robert Nifong/Donna Donovan
Filer Authorized By:	Justin Robert Nifong
Attorney Docket Number:	426/2/9 UTIL
Receipt Date:	29-OCT-2020
Filing Date:	03-MAR-2020
Time Stamp:	14:32:19
Application Type:	Utility under 35 USC 111(a)

Payment information:

Submitted with Payment	no

File Listing:

Document Number	Document Description	File Name	File Size(Bytes)/ Message Digest	Multi Part /.zip	Pages (if appl.)
1	Change of Address	426-2-9UTIL-20201029-Change-of-Address.pdf	259136 2926a103fe7de31ee2e693f52f1d48a346acb772	no	2

Warnings:

Information:	
Total Files Size (in bytes):	259136

This Acknowledgement Receipt evidences receipt on the noted date by the USPTO of the indicated documents, characterized by the applicant, and including page counts, where applicable. It serves as evidence of receipt similar to a Post Card, as described in MPEP 503.

New Applications Under 35 U.S.C. 111
If a new application is being filed and the application includes the necessary components for a filing date (see 37 CFR 1.53(b)-(d) and MPEP 506), a Filing Receipt (37 CFR 1.54) will be issued in due course and the date shown on this Acknowledgement Receipt will establish the filing date of the application.
National Stage of an International Application under 35 U.S.C. 371
If a timely submission to enter the national stage of an international application is compliant with the conditions of 35 U.S.C. 371 and other applicable requirements a Form PCT/DO/EO/903 indicating acceptance of the application as a national stage submission under 35 U.S.C. 371 will be issued in addition to the Filing Receipt, in due course.
New International Application Filed with the USPTO as a Receiving Office
If a new international application is being filed and the international application includes the necessary components for an international filing date (see PCT Article 11 and MPEP 1810), a Notification of the International Application Number and of the International Filing Date (Form PCT/RO/105) will be issued in due course, subject to prescriptions concerning national security, and the date shown on this Acknowledgement Receipt will establish the international filing date of the application.

UNITED STATES PATENT AND TRADEMARK OFFICE

UNITED STATES DEPARTMENT OF COMMERCE
United States Patent and Trademark Office
Address: COMMISSIONER FOR PATENTS
P.O. Box 1450
Alexandria, Virginia 22313-1450
www.uspto.gov

APPLICATION NO.	ISSUE DATE	PATENT NO.	ATTORNEY DOCKET NO.	CONFIRMATION NO.
16/808,137	10/06/2020	10792172	426/2/9 UTIL	1706

115007 7590 09/16/2020
NK Patent Law
4917 Waters Edge Dr.
Suite 275
Raleigh, NC 27606

ISSUE NOTIFICATION

The projected patent number and issue date are specified above.

Determination of Patent Term Adjustment under 35 U.S.C. 154 (b)
(application filed on or after May 29, 2000)

The Patent Term Adjustment is 0 day(s). Any patent to issue from the above-identified application will include an indication of the adjustment on the front page.

If a Continued Prosecution Application (CPA) was filed in the above-identified application, the filing date that determines Patent Term Adjustment is the filing date of the most recent CPA.

Applicant will be able to obtain more detailed information by accessing the Patent Application Information Retrieval (PAIR) WEB site (http://pair.uspto.gov).

Any questions regarding the Patent Term Extension or Adjustment determination should be directed to the Office of Patent Legal Administration at (571)-272-7702. Questions relating to issue and publication fee payments should be directed to the Application Assistance Unit (AAU) of the Office of Data Management (ODM) at (571)-272-4200.

APPLICANT(s) (Please see PAIR WEB site http://pair.uspto.gov for additional applicants):

Ali Shahriari, Boca Raton, FL;
Aortic Innovations, LLC, Boca Raton, FL;

The United States represents the largest, most dynamic marketplace in the world and is an unparalleled location for business investment, innovation, and commercialization of new technologies. The USA offers tremendous resources and advantages for those who invest and manufacture goods here. Through SelectUSA, our nation works to encourage and facilitate business investment. To learn more about why the USA is the best country in the world to develop technology, manufacture products, and grow your business, visit SelectUSA.gov.

IR103 (Rev. 10/09)

UNITED STATES PATENT AND TRADEMARK OFFICE

UNITED STATES DEPARTMENT OF COMMERCE
United States Patent and Trademark Office
Address: COMMISSIONER FOR PATENTS
P.O. Box 1450
Alexandria, Virginia 22313-1450
www.uspto.gov

APPLICATION NO.	FILING DATE	FIRST NAMED INVENTOR	ATTORNEY DOCKET NO.	CONFIRMATION NO.
16/808,137	03/03/2020	Ali Shahriari	426/2/9 UTIL	1706

115007 7590 09/08/2020
NK Patent Law
4917 Waters Edge Dr.
Suite 275
Raleigh, NC 27606

EXAMINER
SHIPMON, TIFFANY P

ART UNIT	PAPER NUMBER
3774	

NOTIFICATION DATE	DELIVERY MODE
09/08/2020	ELECTRONIC

Please find below and/or attached an Office communication concerning this application or proceeding.

The time period for reply, if any, is set in the attached communication.

Notice of the Office communication was sent electronically on above-indicated "Notification Date" to the following e-mail address(es):

docket@nkpatentlaw.com
eofficeaction@appcoll.com
usptomail@nkpatentlaw.com

PTOL-90A (Rev. 04/07)

Corrected ***Notice of Allowability***	**Application No.** 16/808,137	**Applicant(s)** Shahriari, Ali	
	Examiner TIFFANY P SHIPMON	**Art Unit** 3774	**AIA (FITF) Status** No

-- The MAILING DATE of this communication appears on the cover sheet with the correspondence address--

All claims being allowable, PROSECUTION ON THE MERITS IS (OR REMAINS) CLOSED in this application. If not included herewith (or previously mailed), a Notice of Allowance (PTOL-85) or other appropriate communication will be mailed in due course. **THIS NOTICE OF ALLOWABILITY IS NOT A GRANT OF PATENT RIGHTS.** This application is subject to withdrawal from issue at the initiative of the Office or upon petition by the applicant. See 37 CFR 1.313 and MPEP 1308.

1. ☑ This communication is responsive to the IDS filed 7/9/2020.
   ☐ A declaration(s)/affidavit(s) under **37 CFR 1.130(b)** was/were filed on _____.

2. ☐ An election was made by the applicant in response to a restriction requirement set forth during the interview on _____; the restriction requirement and election have been incorporated into this action.

3. ☑ The allowed claim(s) is/are 11-27 . As a result of the allowed claim(s), you may be eligible to benefit from the **Patent Prosecution Highway** program at a participating intellectual property office for the corresponding application. For more information, please see **http://www.uspto.gov/patents/init_events/pph/index.jsp** or send an inquiry to **PPHfeedback@uspto.gov.**

4. ☐ Acknowledgment is made of a claim for foreign priority under 35 U.S.C. § 119(a)-(d) or (f).

   Certified copies:

   a) ☐ All b) ☐ Some *c) ☐ None of the:

   1. ☐ Certified copies of the priority documents have been received.
   2. ☐ Certified copies of the priority documents have been received in Application No. _____ .
   3. ☐ Copies of the certified copies of the priority documents have been received in this national stage application from the International Bureau (PCT Rule 17.2(a)).

   * Certified copies not received: _____ .

Applicant has THREE MONTHS FROM THE "MAILING DATE" of this communication to file a reply complying with the requirements noted below. Failure to timely comply will result in ABANDONMENT of this application.
THIS THREE-MONTH PERIOD IS NOT EXTENDABLE.

5. ☐ CORRECTED DRAWINGS (as "replacement sheets") must be submitted.
   ☐ including changes required by the attached Examiner's Amendment / Comment or in the Office action of Paper No./Mail Date _____ .

   Identifying indicia such as the application number (see 37 CFR 1.84(c)) should be written on the drawings in the front (not the back) of each sheet. Replacement sheet(s) should be labeled as such in the header according to 37 CFR 1.121(d).

6. ☐ DEPOSIT OF and/or INFORMATION about the deposit of BIOLOGICAL MATERIAL must be submitted. Note the attached Examiner's comment regarding REQUIREMENT FOR THE DEPOSIT OF BIOLOGICAL MATERIAL.

Attachment(s)

1. ☐ Notice of References Cited (PTO-892)
2. ☑ Information Disclosure Statements (PTO/SB/08), Paper No./Mail Date _____.
3. ☐ Examiner's Comment Regarding Requirement for Deposit of Biological Material _____.
4. ☐ Interview Summary (PTO-413), Paper No./Mail Date. _____.
5. ☐ Examiner's Amendment/Comment
6. ☐ Examiner's Statement of Reasons for Allowance
7. ☐ Other _____.

/Christopher D. Prone/ Primary Examiner, Art Unit 3774	/TIFFANY P SHIPMON/ Examiner, Art Unit 3774

Issue Classification	Application/Control No.	Applicant(s)/Patent Under Reexamination
	16/808,137	Shahriari, Ali
	Examiner	**Art Unit**
	TIFFANY P SHIPMON	3774

CPC

Symbol					Type	Version
A61F	/	2	/	856	F	2013-01-01
A61F	/	2	/	07	I	2013-01-01
A61F	/	2	/	962	I	2013-01-01
A61F	/	2	/	2418	I	2013-01-01
A61F	/	2	/	82	I	2013-01-01
A61F	/	2002	/	061	A	2013-01-01
A61F	/	2220	/	0025	A	2013-01-01
A61F	/	2230	/	0067	A	2013-01-01
A61F	/	2002	/	067	A	2013-01-01
A61F	/	2220	/	0008	A	2013-01-01
A61F	/	2220	/	0016	A	2013-01-01
A61F	/	2230	/	001	A	2013-01-01
A61F	/	2250	/	0048	A	2013-01-01
A61F	/	2	/	89	A	2013-01-01
A61F	/	2	/	90	A	2013-01-01
A61F	/	2220	/	0058	A	2013-01-01
A61F	/	2220	/	0075	A	2013-01-01
A61F	/	2230	/	0034	A	2013-01-01
A61F	/	2210	/	0014	A	2013-01-01
A61F	/	2210	/	0057	A	2013-01-01
A61F	/	2210	/	00	A	2013-01-01

CPC Combination Sets

Symbol					Type	Set	Ranking	Version
	/		/					

/TIFFANY P SHIPMON/ Examiner, Art Unit 3774 (Assistant Examiner)	31 August 2020 (Date)	**Total Claims Allowed:** 17	
/Christopher D. Prone/ Primary Examiner, Art Unit 3774 (Primary Examiner)	31 August 2020 (Date)	O.G. Print Claim(s) 1	O.G. Print Figure 20

U.S. Patent and Trademark Office

Part of Paper No.: 20200728

Issue Classification	Application/Control No.	Applicant(s)/Patent Under Reexamination
	16/808,137	Shahriari, Ali
	Examiner	**Art Unit**
	TIFFANY P SHIPMON	3774

INTERNATIONAL CLASSIFICATION				
CLAIMED				
A61F	/	2	/	07

NON-CLAIMED				
	/		/	

US ORIGINAL CLASSIFICATION	
CLASS	**SUBCLASS**

CROSS REFERENCES(S)						
CLASS	**SUBCLASS (ONE SUBCLASS PER BLOCK)**					

/TIFFANY P SHIPMON/ Examiner, Art Unit 3774 (Assistant Examiner)	31 August 2020 (Date)	**Total Claims Allowed:** 17	
/Christopher D. Prone/ Primary Examiner, Art Unit 3774 (Primary Examiner)	31 August 2020 (Date)	O.G. Print Claim(s) 1	O.G. Print Figure 20

U.S. Patent and Trademark Office

Part of Paper No.: 20200728

Issue Classification	Application/Control No.	Applicant(s)/Patent Under Reexamination
	16/808,137	Shahriari, Ali
	Examiner	**Art Unit**
	TIFFANY P SHIPMON	3774

☐ Claims renumbered in the same order as presented by applicant ☐ CPA ☐ T.D. ☐ R.1.47

CLAIMS

Final	Original	Final	Original	Final	Original	Final	Original	Final	Original	Final	Original	Final	Original	Final	Original
1	11	10	20												
2	12	11	21												
3	13	12	22												
4	14	13	23												
5	15	14	24												
6	16	15	25												
7	17	16	26												
8	18	17	27												
9	19														

/TIFFANY P SHIPMON/ Examiner, Art Unit 3774 (Assistant Examiner)	31 August 2020 (Date)	**Total Claims Allowed:** 17	
/Christopher D. Prone/ Primary Examiner, Art Unit 3774 (Primary Examiner)	31 August 2020 (Date)	O.G. Print Claim(s) 1	O.G. Print Figure 20

U.S. Patent and Trademark Office Part of Paper No.: 20200728

OK TO ENTER: /T.P.S/ 08/31/2020

COMMUNICATION TO THE UNITED STATES PATENT AND TRADEMARK OFFICE

Application No.	:	16/808,137	Confirmation No.:	1706
Applicant	:	Aortic Innovations, LLC		
First Named Inventor	:	Ali Shahriari		
Filing Date	:	Mar 3, 2020		
TC/A.U.	:	3774		
Examiner	:	Tiffany Shipmon		
Docket No.	:	426/2/9 UTIL		
Customer No.	:	115007		

Title of Invention: DEVICE FOR ENDOVASCULAR AORTIC REPAIR AND METHOD OF USING THE SAME

Via EFS-Web
Commissioner for Patents
P.O. Box 1450
Alexandria, VA 22313-1450

AMENDMENT AFTER ALLOWANCE

Commissioner:

This is responsive to the Notice of Allowance dated June 18, 2020. Applicant is submitting a title and abstract amendment to more appropriately correct the claimed subject matter.

Amendments to the title are reflected on page 2 and with the being submitted replacement ADS.

Amendments to the abstract are reflected on page 3.

Remarks begin on page 4.

Doc code: IDS
Doc description: Information Disclosure Statement (IDS) Filed

PTO/SB/08a (02-18)
Approved for use through 11/30/2020. OMB 0651-0031
U.S. Patent and Trademark Office; U.S. DEPARTMENT OF COMMERCE
Under the Paperwork Reduction Act of 1995, no persons are required to respond to a collection of information unless it contains a valid OMB control number.

INFORMATION DISCLOSURE STATEMENT BY APPLICANT (**Not for submission under 37 CFR 1.99)**		
	Application Number	16808137
	Filing Date	2020-03-03
	First Named Inventor	Ali Shahriari
	Art Unit	3774
	Examiner Name	Tiffany P. Shipmon
	Attorney Docket Number	426/2/9 UTIL

U.S.PATENTS Remove

Examiner Initial*	Cite No	Patent Number	Kind Code[1]	Issue Date	Name of Patentee or Applicant of cited Document	Pages,Columns,Lines where Relevant Passages or Relevant Figures Appear
	1					

If you wish to add additional U.S. Patent citation information please click the Add button. Add

U.S.PATENT APPLICATION PUBLICATIONS Remove

Examiner Initial*	Cite No	Publication Number	Kind Code[1]	Publication Date	Name of Patentee or Applicant of cited Document	Pages,Columns,Lines where Relevant Passages or Relevant Figures Appear
	1					

If you wish to add additional U.S. Published Application citation information please click the Add button. Add

FOREIGN PATENT DOCUMENTS Remove

Examiner Initial*	Cite No	Foreign Document Number[3]	Country Code[2] i	Kind Code[4]	Publication Date	Name of Patentee or Applicant of cited Document	Pages,Columns,Lines where Relevant Passages or Relevant Figures Appear	T[5]
	1							

If you wish to add additional Foreign Patent Document citation information please click the Add button Add

NON-PATENT LITERATURE DOCUMENTS Remove

Examiner Initials*	Cite No	Include name of the author (in CAPITAL LETTERS), title of the article (when appropriate), title of the item (book, magazine, journal, serial, symposium, catalog, etc), date, pages(s), volume-issue number(s), publisher, city and/or country where published.	T[5]

ALL REFERENCES CONSIDERED EXCEPT WHERE LINED THROUGH. /T.P.S/

INFORMATION DISCLOSURE STATEMENT BY APPLICANT (Not for submission under 37 CFR 1.99)		
	Application Number	16808137
	Filing Date	2020-03-03
	First Named Inventor	Ali Shahriari
	Art Unit	3774
	Examiner Name	Tiffany P. Shipmon
	Attorney Docket Number	426/2/9 UTIL

	1	EPO, Extended European Search Report for Application No. 20172681.7 dated 14 July 2020	

If you wish to add additional non-patent literature document citation information please click the Add button Add

EXAMINER SIGNATURE

Examiner Signature	/TIFFANY P SHIPMON/	Date Considered	07/29/2020

*EXAMINER: Initial if reference considered, whether or not citation is in conformance with MPEP 609. Draw line through a citation if not in conformance and not considered. Include copy of this form with next communication to applicant.

[1] See Kind Codes of USPTO Patent Documents at www.USPTO.GOV or MPEP 901.04. [2] Enter office that issued the document, by the two-letter code (WIPO Standard ST.3). [3] For Japanese patent documents, the indication of the year of the reign of the Emperor must precede the serial number of the patent document. [4] Kind of document by the appropriate symbols as indicated on the document under WIPO Standard ST.16 if possible. [5] Applicant is to place a check mark here if English language translation is attached.

ALL REFERENCES CONSIDERED EXCEPT WHERE LINED THROUGH. /T.P.S/

INFORMATION DISCLOSURE STATEMENT BY APPLICANT (Not for submission under 37 CFR 1.99)		
	Application Number	16808137
	Filing Date	2020-03-03
	First Named Inventor	Ali Shahriari
	Art Unit	3774
	Examiner Name	Tiffany P. Shipmon
	Attorney Docket Number	426/2/9 UTIL

CERTIFICATION STATEMENT

Please see 37 CFR 1.97 and 1.98 to make the appropriate selection(s):

☒ That each item of information contained in the information disclosure statement was first cited in any communication from a foreign patent office in a counterpart foreign application not more than three months prior to the filing of the information disclosure statement. See 37 CFR 1.97(e)(1).

OR

☐ That no item of information contained in the information disclosure statement was cited in a communication from a foreign patent office in a counterpart foreign application, and, to the knowledge of the person signing the certification after making reasonable inquiry, no item of information contained in the information disclosure statement was known to any individual designated in 37 CFR 1.56(c) more than three months prior to the filing of the information disclosure statement. See 37 CFR 1.97(e)(2).

See attached certification statement.

The fee set forth in 37 CFR 1.17 (p) has been submitted herewith.

A certification statement is not submitted herewith.

SIGNATURE

A signature of the applicant or representative is required in accordance with CFR 1.33, 10.18. Please see CFR 1.4(d) for the form of the signature.

Signature	/Justin R. Nifong/	Date (YYYY-MM-DD)	2020-07-09
Name/Print	Justin R. Nifong	Registration Number	59389

This collection of information is required by 37 CFR 1.97 and 1.98. The information is required to obtain or retain a benefit by the public which is to file (and by the USPTO to process) an application. Confidentiality is governed by 35 U.S.C. 122 and 37 CFR 1.14. This collection is estimated to take 1 hour to complete, including gathering, preparing and submitting the completed application form to the USPTO. Time will vary depending upon the individual case. Any comments on the amount of time you require to complete this form and/or suggestions for reducing this burden, should be sent to the Chief Information Officer, U.S. Patent and Trademark Office, U.S. Department of Commerce, P.O. Box 1450, Alexandria, VA 22313-1450. DO NOT SEND FEES OR COMPLETED FORMS TO THIS ADDRESS. **SEND TO: Commissioner for Patents, P.O. Box 1450, Alexandria, VA 22313-1450.**

Privacy Act Statement

The Privacy Act of 1974 (P.L. 93-579) requires that you be given certain information in connection with your submission of the attached form related to a patent application or patent. Accordingly, pursuant to the requirements of the Act, please be advised that: (1) the general authority for the collection of this information is 35 U.S.C. 2(b)(2); (2) furnishing of the information solicited is voluntary; and (3) the principal purpose for which the information is used by the U.S. Patent and Trademark Office is to process and/or examine your submission related to a patent application or patent. If you do not furnish the requested information, the U.S. Patent and Trademark Office may not be able to process and/or examine your submission, which may result in termination of proceedings or abandonment of the application or expiration of the patent.

The information provided by you in this form will be subject to the following routine uses:

1. The information on this form will be treated confidentially to the extent allowed under the Freedom of Information Act (5 U.S.C. 552) and the Privacy Act (5 U.S.C. 552a). Records from this system of records may be disclosed to the Department of Justice to determine whether the Freedom of Information Act requires disclosure of these record s.

2. A record from this system of records may be disclosed, as a routine use, in the course of presenting evidence to a court, magistrate, or administrative tribunal, including disclosures to opposing counsel in the course of settlement negotiations.

3. A record in this system of records may be disclosed, as a routine use, to a Member of Congress submitting a request involving an individual, to whom the record pertains, when the individual has requested assistance from the Member with respect to the subject matter of the record.

4. A record in this system of records may be disclosed, as a routine use, to a contractor of the Agency having need for the information in order to perform a contract. Recipients of information shall be required to comply with the requirements of the Privacy Act of 1974, as amended, pursuant to 5 U.S.C. 552a(m).

5. A record related to an International Application filed under the Patent Cooperation Treaty in this system of records may be disclosed, as a routine use, to the International Bureau of the World Intellectual Property Organization, pursuant to the Patent Cooperation Treaty.

6. A record in this system of records may be disclosed, as a routine use, to another federal agency for purposes of National Security review (35 U.S.C. 181) and for review pursuant to the Atomic Energy Act (42 U.S.C. 218(c)).

7. A record from this system of records may be disclosed, as a routine use, to the Administrator, General Services, or his/her designee, during an inspection of records conducted by GSA as part of that agency's responsibility to recommend improvements in records management practices and programs, under authority of 44 U.S.C. 2904 and 2906. Such disclosure shall be made in accordance with the GSA regulations governing inspection of records for this purpose, and any other relevant (i.e., GSA or Commerce) directive. Such disclosure shall not be used to make determinations about individuals.

8. A record from this system of records may be disclosed, as a routine use, to the public after either publication of the application pursuant to 35 U.S.C. 122(b) or issuance of a patent pursuant to 35 U.S.C. 151. Further, a record may be disclosed, subject to the limitations of 37 CFR 1.14, as a routine use, to the public if the record was filed in an application which became abandoned or in which the proceedings were terminated and which application is referenced by either a published application, an application open to public inspections or an issued patent.

9. A record from this system of records may be disclosed, as a routine use, to a Federal, State, or local law enforcement agency, if the USPTO becomes aware of a violation or potential violation of law or regulation.

PTO/SB/08a (02-18)
Approved for use through 11/30/2020. OMB 0651-0031
U.S. Patent and Trademark Office; U.S. DEPARTMENT OF COMMERCE
Under the Paperwork Reduction Act of 1995, no persons are required to respond to a collection of information unless it contains a valid OMB control number.

INFORMATION DISCLOSURE STATEMENT BY APPLICANT (Not for submission under 37 CFR 1.99)		
	Application Number	16808137
	Filing Date	2020-03-03
	First Named Inventor	Ali Shahriari
	Art Unit	3774
	Examiner Name	Shipmon
	Attorney Docket Number	426/2/9 UTIL

U.S.PATENTS Remove

Examiner Initial*	Cite No	Patent Number	Kind Code[1]	Issue Date	Name of Patentee or Applicant of cited Document	Pages,Columns,Lines where Relevant Passages or Relevant Figures Appear
	1	10716662		2020-07-21	Delaloye et al.	FIGS. 9-10

If you wish to add additional U.S. Patent citation information please click the Add button. Add

U.S.PATENT APPLICATION PUBLICATIONS Remove

Examiner Initial*	Cite No	Publication Number	Kind Code[1]	Publication Date	Name of Patentee or Applicant of cited Document	Pages,Columns,Lines where Relevant Passages or Relevant Figures Appear
	1	20090143855	A1	2009-06-04	Weber et al.	

If you wish to add additional U.S. Published Application citation information please click the Add button. Add

FOREIGN PATENT DOCUMENTS Remove

Examiner Initial*	Cite No	Foreign Document Number[3]	Country Code[2] i	Kind Code[4]	Publication Date	Name of Patentee or Applicant of cited Document	Pages,Columns,Lines where Relevant Passages or Relevant Figures Appear	T[5]
	1	2001049213	WO	No	2009-06-04	Bailey		
	2	2004032987	WO	A1	2004-04-22	Bechgaard et al.		

If you wish to add additional Foreign Patent Document citation information please click the Add button Add

NON-PATENT LITERATURE DOCUMENTS Remove

INFORMATION DISCLOSURE STATEMENT BY APPLICANT (Not for submission under 37 CFR 1.99)	Application Number	16808137
	Filing Date	2020-03-03
	First Named Inventor	Ali Shahriari
	Art Unit	3774
	Examiner Name	Shipmon
	Attorney Docket Number	426/2/9 UTIL

Examiner Initials*	Cite No	Include name of the author (in CAPITAL LETTERS), title of the article (when appropriate), title of the item (book, magazine, journal, serial, symposium, catalog, etc), date, pages(s), volume-issue number(s), publisher, city and/or country where published.	T[5]
	1	SHIPMAN, TIFFANY, Office Action dated 8/11/2020 in US Patent Application No. 16/910,189	

If you wish to add additional non-patent literature document citation information please click the Add button Add

EXAMINER SIGNATURE

Examiner Signature		Date Considered	

*EXAMINER: Initial if reference considered, whether or not citation is in conformance with MPEP 609. Draw line through a citation if not in conformance and not considered. Include copy of this form with next communication to applicant.

[1] See Kind Codes of USPTO Patent Documents at www.USPTO.GOV or MPEP 901.04. [2] Enter office that issued the document, by the two-letter code (WIPO Standard ST.3). [3] For Japanese patent documents, the indication of the year of the reign of the Emperor must precede the serial number of the patent document. [4] Kind of document by the appropriate symbols as indicated on the document under WIPO Standard ST.16 if possible. [5] Applicant is to place a check mark here if English language translation is attached.

EFS Web 2.1.18

INFORMATION DISCLOSURE STATEMENT BY APPLICANT (Not for submission under 37 CFR 1.99)	Application Number	16808137
	Filing Date	2020-03-03
	First Named Inventor	Ali Shahriari
	Art Unit	3774
	Examiner Name	Shipmon
	Attorney Docket Number	426/2/9 UTIL

CERTIFICATION STATEMENT

Please see 37 CFR 1.97 and 1.98 to make the appropriate selection(s):

That each item of information contained in the information disclosure statement was first cited in any communication from a foreign patent office in a counterpart foreign application not more than three months prior to the filing of the information disclosure statement. See 37 CFR 1.97(e)(1).

OR

☐ That no item of information contained in the information disclosure statement was cited in a communication from a foreign patent office in a counterpart foreign application, and, to the knowledge of the person signing the certification after making reasonable inquiry, no item of information contained in the information disclosure statement was known to any individual designated in 37 CFR 1.56(c) more than three months prior to the filing of the information disclosure statement. See 37 CFR 1.97(e)(2).

See attached certification statement.

☒ The fee set forth in 37 CFR 1.17 (p) has been submitted herewith.

☒ A certification statement is not submitted herewith.

SIGNATURE

A signature of the applicant or representative is required in accordance with CFR 1.33, 10.18. Please see CFR 1.4(d) for the form of the signature.

Signature	/Justin R. Nifong/	Date (YYYY-MM-DD)	2020-09-05
Name/Print	Justin R. Nifong	Registration Number	59389

This collection of information is required by 37 CFR 1.97 and 1.98. The information is required to obtain or retain a benefit by the public which is to file (and by the USPTO to process) an application. Confidentiality is governed by 35 U.S.C. 122 and 37 CFR 1.14. This collection is estimated to take 1 hour to complete, including gathering, preparing and submitting the completed application form to the USPTO. Time will vary depending upon the individual case. Any comments on the amount of time you require to complete this form and/or suggestions for reducing this burden, should be sent to the Chief Information Officer, U.S. Patent and Trademark Office, U.S. Department of Commerce, P.O. Box 1450, Alexandria, VA 22313-1450. DO NOT SEND FEES OR COMPLETED FORMS TO THIS ADDRESS. **SEND TO: Commissioner for Patents, P.O. Box 1450, Alexandria, VA 22313-1450.**

Privacy Act Statement

The Privacy Act of 1974 (P.L. 93-579) requires that you be given certain information in connection with your submission of the attached form related to a patent application or patent. Accordingly, pursuant to the requirements of the Act, please be advised that: (1) the general authority for the collection of this information is 35 U.S.C. 2(b)(2); (2) furnishing of the information solicited is voluntary; and (3) the principal purpose for which the information is used by the U.S. Patent and Trademark Office is to process and/or examine your submission related to a patent application or patent. If you do not furnish the requested information, the U.S. Patent and Trademark Office may not be able to process and/or examine your submission, which may result in termination of proceedings or abandonment of the application or expiration of the patent.

The information provided by you in this form will be subject to the following routine uses:

1. The information on this form will be treated confidentially to the extent allowed under the Freedom of Information Act (5 U.S.C. 552) and the Privacy Act (5 U.S.C. 552a). Records from this system of records may be disclosed to the Department of Justice to determine whether the Freedom of Information Act requires disclosure of these record s.

2. A record from this system of records may be disclosed, as a routine use, in the course of presenting evidence to a court, magistrate, or administrative tribunal, including disclosures to opposing counsel in the course of settlement negotiations.

3. A record in this system of records may be disclosed, as a routine use, to a Member of Congress submitting a request involving an individual, to whom the record pertains, when the individual has requested assistance from the Member with respect to the subject matter of the record.

4. A record in this system of records may be disclosed, as a routine use, to a contractor of the Agency having need for the information in order to perform a contract. Recipients of information shall be required to comply with the requirements of the Privacy Act of 1974, as amended, pursuant to 5 U.S.C. 552a(m).

5. A record related to an International Application filed under the Patent Cooperation Treaty in this system of records may be disclosed, as a routine use, to the International Bureau of the World Intellectual Property Organization, pursuant to the Patent Cooperation Treaty.

6. A record in this system of records may be disclosed, as a routine use, to another federal agency for purposes of National Security review (35 U.S.C. 181) and for review pursuant to the Atomic Energy Act (42 U.S.C. 218(c)).

7. A record from this system of records may be disclosed, as a routine use, to the Administrator, General Services, or his/her designee, during an inspection of records conducted by GSA as part of that agency's responsibility to recommend improvements in records management practices and programs, under authority of 44 U.S.C. 2904 and 2906. Such disclosure shall be made in accordance with the GSA regulations governing inspection of records for this purpose, and any other relevant (i.e., GSA or Commerce) directive. Such disclosure shall not be used to make determinations about individuals.

8. A record from this system of records may be disclosed, as a routine use, to the public after either publication of the application pursuant to 35 U.S.C. 122(b) or issuance of a patent pursuant to 35 U.S.C. 151. Further, a record may be disclosed, subject to the limitations of 37 CFR 1.14, as a routine use, to the public if the record was filed in an application which became abandoned or in which the proceedings were terminated and which application is referenced by either a published application, an application open to public inspections or an issued patent.

9. A record from this system of records may be disclosed, as a routine use, to a Federal, State, or local law enforcement agency, if the USPTO becomes aware of a violation or potential violation of law or regulation.

(12) INTERNATIONAL APPLICATION PUBLISHED UNDER THE PATENT COOPERATION TREATY (PCT)

(19) World Intellectual Property Organization
International Bureau

(43) International Publication Date
22 April 2004 (22.04.2004)

PCT

(10) International Publication Number
WO 2004/032987 A1

(51) International Patent Classification[7]: A61L 27/44, 27/14, A61F 2/02, B32B 27/32

(21) International Application Number: PCT/DK2003/000686

(22) International Filing Date: 10 October 2003 (10.10.2003)

(25) Filing Language: English

(26) Publication Language: English

(30) Priority Data:
PA 2002 01567 11 October 2002 (11.10.2002) DK

(71) Applicant *(for all designated States except US)*: **CARTIFICIAL A/S** [DK/DK]; Fruebjergvej 3, Symbion, DK-2100 København Ø (DK).

(72) Inventors; and
(75) Inventors/Applicants *(for US only)*: **BECHGAARD, Klaus** [DK/DK]; Østerled 2, DK-2100 København Ø (DK). **LØGSTRUP ANDERSEN, Tom** [DK/DK]; Egegårdsparken 113, Himmelev, DK-4000 Roskilde (DK). **LYSTRUP, Aage** [DK/DK]; Gyvelvej 6A 1.th, DK-4000 Roskilde (DK). **BRØNDSTED, Povl** [DK/DK]; Ardenvej 4, DK-4600 Køge (DK). **LUND SPORRING, Sune** [DK/DK]; Ingelstrupvej 7, DK-4682 Tureby (DK). **BRUUN LAURITZEN, Jes** [DK/DK]; Grønningen 21, 4, DK-1270 Copenhagen K (DK). **OLSEN, Ole** [DK/DK]; Skovvej 77D, DK-2920 Charlottenlund (DK).

(74) Agent: **HØIBERG A/S**; St. Kongensgade 59A, DK-1264 Copenhagen K (DK).

(81) Designated States *(national)*: AE, AG, AL, AM, AT, AU, AZ, BA, BB, BG, BR, BY, BZ, CA, CH, CN, CO, CR, CU, CZ, DE, DK, DM, DZ, EC, EE, EG, ES, FI, GB, GD, GE, GH, GM, HR, HU, ID, IL, IN, IS, JP, KE, KG, KP, KR, KZ, LC, LK, LR, LS, LT, LU, LV, MA, MD, MG, MK, MN, MW, MX, MZ, NI, NO, NZ, OM, PG, PH, PL, PT, RO, RU, SC, SD, SE, SG, SK, SL, SY, TJ, TM, TN, TR, TT, TZ, UA, UG, US, UZ, VC, VN, YU, ZA, ZM, ZW.

(84) Designated States *(regional)*: ARIPO patent (GH, GM, KE, LS, MW, MZ, SD, SL, SZ, TZ, UG, ZM, ZW), Eurasian patent (AM, AZ, BY, KG, KZ, MD, RU, TJ, TM),

[Continued on next page]

(54) Title: MEDICAL DEVICE COMPRISING A BIO-COMPATIBLE POLYMERIC PRODUCT WITH A LAYERED STRUCTURE

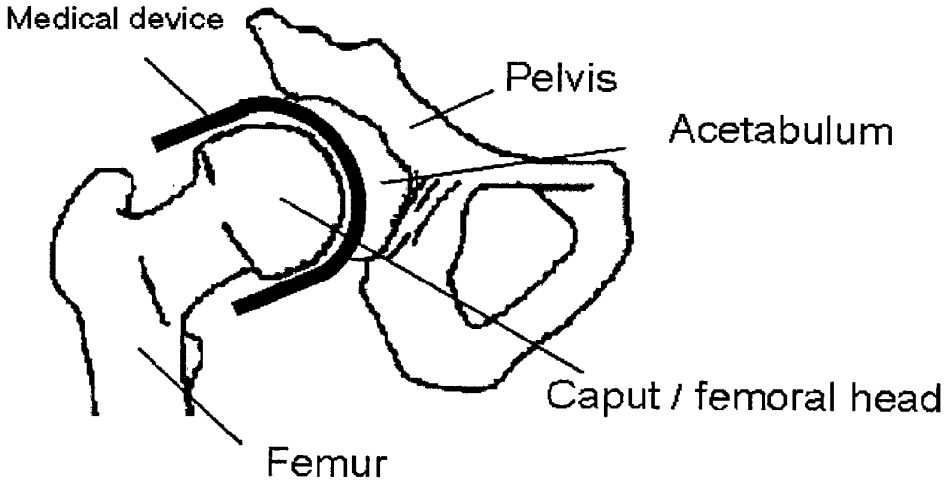

(57) Abstract: Disclosed is a method and a medical device comprising a bio-compatible polymeric product with a layered structure comprising at least one upper layer of a first polymeric component, a middle layer of a second polymeric component, and at least one lower layer of a third polymeric component, wherein the chain length of the first polymeric component and the third polymeric component is longer than the chain length of the second polymeric component. The medical device combines the features of strength, durability and bio-compatibility as well as it has resistance to tear and wear and has a good compressibility. A preferred design of the medical device is a cup produced from a core or film of LDPE surrounded by two layers of UHMWPE fabric. The medical device can be used as implants in mammals, especially as artificial cartilage within joints to secure mobility of the joint.

WO 2004/032987 A1

European patent (AT, BE, BG, CH, CY, CZ, DE, DK, EE, ES, FI, FR, GB, GR, HU, IE, IT, LU, MC, NL, PT, RO, SE, SI, SK, TR), OAPI patent (BF, BJ, CF, CG, CI, CM, GA, GN, GQ, GW, ML, MR, NE, SN, TD, TG).

Declarations under Rule 4.17:

— *as to applicant's entitlement to apply for and be granted a patent (Rule 4.17(ii)) for the following designations AE, AG, AL, AM, AT, AU, AZ, BA, BB, BG, BR, BY, BZ, CA, CH, CN, CO, CR, CU, CZ, DE, DK, DM, DZ, EC, EE, EG, ES, FI, GB, GD, GE, GH, GM, HR, HU, ID, IL, IN, IS, JP, KE, KG, KP, KR, KZ, LC, LK, LR, LS, LT, LU, LV, MA, MD, MG, MK, MN, MW, MX, MZ, NI, NO, NZ, OM, PG, PH, PL, PT, RO, RU, SC, SD, SE, SG, SK, SL, SY, TJ, TM, TN, TR, TT, TZ, UA, UG, UZ, VC, VN, YU, ZA, ZM, ZW, ARIPO patent (GH, GM, KE, LS, MW, MZ, SD, SL, SZ, TZ, UG, ZM, ZW), Eurasian patent (AM, AZ, BY, KG, KZ, MD, RU, TJ, TM), European patent (AT, BE, BG, CH, CY, CZ, DE, DK, EE, ES, FI, FR, GB, GR, HU, IE, IT, LU, MC, NL, PT, RO, SE, SI, SK, TR), OAPI patent (BF, BJ, CF, CG, CI, CM, GA, GN, GQ, GW, ML, MR, NE, SN, TD, TG)*

— *of inventorship (Rule 4.17(iv)) for US only*

Published:

— *with international search report*

— *before the expiration of the time limit for amending the claims and to be republished in the event of receipt of amendments*

For two-letter codes and other abbreviations, refer to the "Guidance Notes on Codes and Abbreviations" appearing at the beginning of each regular issue of the PCT Gazette.

MEDICAL DEVICE COMPRISING A BIO-COMPATIBLE POLYMERIC PRODUCT WITH A LAYERED STRUCTURE

Field of invention

The present invention relates to polymers and products produced by polymers. It discloses a method for enhancing the quality of polymer products, especially polymeric products that are to be exposed to pressure, impact, wear and tear. The polymers disclosed herein are particularly useful for cartilage substitution and for products to be utilised in medical devices. Especially the product can be used as an artificial joint spacer made to replace the missing cartilage, so the joint can stay mobile. All patent and non-patent references cited in the present application, are hereby incorporated by reference in their entirety.

Background of invention

Many prosthetic medical devices are implanted into load-bearing joints such as knees, hips, etc. As such, these prosthetic devices must be very strong and possess a high degree of wear resistance. Presently, the prosthetic medical device industry has utilised various metals and polymers and combinations thereof to fabricate prosthetic devices. Unfortunately, both metals and polymers have drawbacks. For example, metals such as stainless steel, tungsten and titanium, and alloys thereof, may succumb to the corrosive environment of the body and eventually begin to wear. Such wear may result in fine metallic particles being scraped away from the contact surface of the device and into surrounding tissue and bone which may potentially cause pathogenic problems. Polymers, such as polyethylene, polypropylene and nylons may also exhibit wear and may consequently produce particles which diffuse into tissue and bone. Both metallic and polymeric particles shed from these prosthetic medical devices are of concern because they may be inherently reactive with the tissue and bone they contact, thus possibly causing tissue degradation or necrosis.

Many medical devices are implanted into load-bearing joints such as knees, hips, etc, or utilised in the human body where mechanical function provide high strength or shape stability such as heart valves, breast prosthesis, stent, catheter, etc. As such, these medical devices must be very strong and possess a high degree of wear resistance. Prosthetic medical devices manufacturers constantly work toward

developing better products by improving their physical properties. Improved wear resistance, for example, is a desirable quality to impart to a prosthetic medical device. Improving wear resistance without losing strength or causing oxidative degradation is a difficult balance to obtain.

Generally, joint damage, such as cartilage damage, is treated by replacing the joint with an artificial joint. However, serious complications are caused by the replacement of artificial joints, in particular a high occurrence rate of loosening problems resulting in breakage of the bones around the artificial joint. In the case of cartilage damage a repair with cartilage substitution placed into intact bones is to be preferred instead of replacing the entire joint.

Various methods have been devised attempting to reduce the wear rate of the load bearing prosthetic medical devices. For polymers, a common practice within the prosthetic medical device industry is to use cross-linked polymers and resins to form the medical device. Polymers are commonly cross-linked by chemical catalysis or irradiation exposure. Most cross-linking methodologies do result in greater wear resistance. However, indiscriminate or uncontrolled cross-linking may result in the formation of a weakened polymeric matrix, not capable of withstanding the enormous pressures placed on the devices in the patient resulting in degradative wear as described above.

One common practice within the medical device industry is to use cross-linked polymers and resins to form the medical device. "Cross-linked" polymers are defined as polymeric materials which have been subjected to chemical or radiation-initiated activation resulting in dendritic bond formation between and amongst individual polymeric chains yielding new intermolecular and intramolecular networks. These cross-linked networks within the polymer provide chemical and physical properties, which are usually different from the virgin polymer. Such properties include increased wear and creep resistance, durability, etc. Indiscriminate or uncontrolled cross-linking of the polymeric material comprising the medical device may result in improved wear resistance, but strength and other desirable properties may be sacrificed.

Ultrahigh molecular weight polyethylene (hereinafter referred to as 'UHMW polyethylene' or 'UHMWPE') is commonly used to make prosthetic joints such as artificial

hip joints. In recent years, it has become increasingly apparent that tissue necrosis and interface osteolysis, in response to UHMW polyethylene wear debris, are one cause of the long-term loosening failure of prosthetic joints. For example, the process of wear of acetabular cups of UHMW polyethylene in artificial hip joints introduces many microscopic wear particles into the surrounding tissues. The reaction of the body to these particles includes inflammation and deterioration of the tissues, particularly the bone to which the prosthesis is anchored. Eventually, the prosthesis becomes painfully loose and must be revised. It is generally accepted by orthopaedic surgeons and biomaterials scientists that the reaction of tissue to wear debris is the chief cause of long-term failure of such prostheses.

US application 20020007219 describes radiation and melt treated ultra high molecular weight polyethylene prosthetic devices. The reference describes a medical prosthesis for use within the body which is formed of radiation treated ultra high molecular weight polyethylene having substantially no detectable free radicals. Preferred prostheses exhibit reduced production of particles from the prosthesis during wear of the prosthesis, and are substantially oxidation resistant. Methods of manufacture of such devices and material used therein are also described.

US application 20020037944 describes crosslinking of polyethylene for low wear using radiation and thermal treatments. Described are methods for enhancing the wear-resistance of polymers, the resulting polymers, and in vivo implants made from such polymers. One embodiment of the invention presents a method whereby a polymer is irradiated, preferably with gamma radiation, then thermally treated, such as by remelting or annealing. The resulting polymeric composition preferably has its most oxidized surface layer removed. Another embodiment of the invention presents a general method for optimizing the wear resistance and desirable physical and/or chemical properties of a polymer by cross-linking and thermally treating it. The resulting polymeric composition is wear-resistant and may be fabricated into an in vivo implant.

US application 20010049401 describes chemically crosslinked ultrahigh molecular weight polyethylene for artificial human joints. Disclosed is a method for enhancing the wear-resistance of polymers by crosslinking them, especially before irradiation

sterilization. In particular, the invention presents the use of chemically crosslinked ultrahigh molecular weight polyethylene in in vivo implants.

Summary of invention

A first aspect of the present invention relates to a medical device comprising a bio-compatible polymeric product with a layered structure comprising at least one upper layer of a first polymeric component, a middle layer of a second polymeric component, and at least one lower layer of a third polymeric component, wherein the chain length of the first polymeric component and the third polymeric component are longer than the chain length of the second polymeric component.

The first and third polymeric component may be similar or the first and third polymeric component may be different from each other.

In a preferred embodiment the present invention provides methods of producing medical devices. In another preferred embodiment the present invention provides methods of producing polyethylene medical devices. Specifically, the invention provides a stratified polymeric structure to produce the medical devices having improved wear characteristics. At least three layers of polymers are stratified, and said stratified product may be pressed into shape.

By the term 'medical device' is to be understood any device which can be used shortly or more permanently in any process including a medical treatment of an individual.

The term 'stratified' is used synonymously with the terms 'layered' and 'stacked' and means that the product is made by three or more layers or strata of polymer material.

The characteristics of the medical product in the present invention is high tensile strength and improved wear resistance as well as capability of absorbing shocks, impacts and pressure load, due to the stratified structure of the device and cross-linked polymers within the device. Wear resistance can also mean wearability.

The term 'layered structure' especially describe features according to the method of formation of the polymer product of the devices, although a layered structure may be or may not be visible macroscopically or observable microscopically within the device produced by the polymeric components. The layered structure of a device may be realised by chemical analysis of the polymeric product and also by microscopic method comprising light microscopy, contrast microscopy or NMR microscopy. A surface layer of the medical device is optional. The surface layer of the device can only be detected by chemical analysis.

In a preferred embodiment a cartilage substitute is produced comprising the polymeric material, said cartilage substitute may substitute for damaged cartilage especially within joints with intact bones, where it is being capable of partly or completely fill the role of natural cartilage in the joint.

The present invention also provides for the fabrication of various types of prosthetic devices and other medical devices. While the invention is not limited to any particularly shaped medical and prosthetic device, the preferred shapes include acetabular cups, hip endo-prostheses, knees, ankles, shoulders, tibial and femoral joints, finger and thumb members, vertebra, elbows, foot and toe members and wrist members as well as breast prosthesis, heart valves, stents, and catheters.

In one embodiment of the invention, the polymeric materials produced in relatively thin layers are stacked, preferred is a combination where layers with different constitution are located against each other. Layers comprising polymeric materials of two or more constitutions are utilised. Preferably one layer is composed of one polymeric material. One polymeric material comprises long polymeric chains such as fibres, whereas the other polymeric material comprises short chain polymer material. The thickness of each polymer layer of the device is selected in accordance to the thickness of the device and the number of layers decided to utilise for the device, a preferred thickness of each polymer layer is between 0.1 mm and 10 mm, optional but also preferred is a device constructed of polymer layers wherein the long polymer fibre are comprised in thinner polymer layers than the layers of the short chain polymer material.

Medical devices manufactured from the stratified polymer layers of the invention may be moulded in one or more processes comprising heating, vacuuming and pressing. The stacked polymer layers are conducted to heat to combine the polymer layers, simultaneously or afterwards the polymer product is conducted to a press in vacuum where the overall shape of the medical device is controlled. Any surplus of polymer material may be cut away.

The medical devices can be produced with attachments, or one or more apertures to improve the functionality within the body of the individual receiving the medical devise or to fasten the device in said body.

Accordingly, another aspect of the invention is a method for producing a medical device of a polymeric product, said method comprising obtaining a number of at least three polymer layers, and positioning the polymer layers in a sandwich composition, and shaping the sandwich composition of polymer layers by heating said composition followed by pressing it into a mould, where the heating and pressing processes are conducted in vacuum, and providing the polymeric product in a desired shape.

In an embodiment the medical device is subjected to irradiation to cross-link the polymeric material, the radiation source can be, but is not limited to, high-energy electrons, gamma rays, light photons, microwaves, preferred is high-energy electrons and gamma rays, more preferred is high-energy electrons.

To reduce the friction between the medical polymeric device and its surroundings in the body, the shaped polymeric product may be subjected to surface coating, the surface coating may be any bio-compatible coating material capable of reducing friction. In a preferred embodiment the product is coated with 10-500 nanometer of polyvinylpyrrolidone (PVP) by a plasma polymerisation treatment. The surface coating increases the lifetime of the device by increasing lubricating properties ant thereby decrease the friction.

Definitions

LDPE = Low-density polyethylene

UHMWPE = Ultra high molecular weight polyethylene

The term 'core' is used to describe a layer of polymer; said layer is made of short chain polymer material. The short chain polymer material of the core is cast to the desired thickness. The core is primarily used to enhance the capability of the device to absorb shocks, impacts and pressure load, the core can also attach two layers of fabric to each other.

The term 'fabric' is used to describe a layer of polymer; said layer is made of long polymer chains, such as polymer fibre. The fibres are combined in a textile structure.

The term 'fibre' is used as a unit of molecules, where the fibre is of relatively short length, and further characterised by a high ratio of length to thickness or diameter.

The term 'filament' is used as a single textile element of small diameter and very long length considered as continuous.

The term 'film' is used to describe a layer of polymer; said layer is made of short chain polymer material. The short chain polymer material of the film is cast to the desired thickness. The film is primarily used to attach two layers of fabric to each other, but also provide important features to the device as described below.

The term 'inlay' is used to describe a smaller layer of polymer; said layer is made of short chain polymer material. The short chain polymer material of the inlay is cast to the desired shape and thickness. The inlay is primarily used to enhance the capability of the device to absorb shocks, impacts and pressure load in areas of the device subjected to higher degrees of pressure and shocks.

The term 'implant' is used for a device, which is inserted into the body in order to replace or substitute for a function, which has been lost or impaired.

By the term 'medical device' is to be understood any device which can be used shortly or more permanent in any process including a medical treatment of an individual. In particular the 'medical device' may be an implant, wherein the term

implant refers to a device meant to being inserted into the human or animal body for a long period of time, for example several years.The term 'strand' is used as an assembly of parallel filaments simultaneously produced and lightly bonded.

Description of Drawings

Figure 1 illustrates one three-layered stratified structure of the medical devices comprising fabric – core or inlay – fabric.

Figure 2 illustrates the three-layered stratified structure of figure 1 which is surface coated.

Figure 3 illustrates one three-layered stratified structure of the medical devices comprising fabric – film – fabric.

Figure 4 illustrates the three-layered stratified structure of figure 3 which is surface coated.

Figure 5 illustrates one five-layered stratified structure of the medical devices comprising fabric – core or inlay – fabric – film – fabric.

Figure 6 illustrates the five-layered stratified structure of figure 5 which is surface coated.

Figure 7 illustrates one surface coated seven-layered stratified structure of the medical devices comprising fabric – film – fabric – core or inlay – fabric – film – fabric.

Figure 8A illustrates the seven-layered stratified structure of figure 7 as well as a cup-shaped device produced from said layered structure (8B) and sealing of the rim (8C).

Figure 9 illustrates a flow chart in the production of the device.

Figure 10 illustrates a human hip joint in which one embodiment of a medical device according to the invention is located *in situ*.

Detailed description of the invention

The present invention provides a desirable balance of improved wear resistance and high tensile strength and toughness in the polymeric compositions used for medical devices. It has been discovered that wear resistance can be improved without sacrificing other desirable properties such as toughness or strength by controlling the amount of different polymeric substrate comprising the prosthetic device. Referring to FIG. 1, the stratified structure of the medical devices is illustrated. The products of the invention has a high tensile strength and improved wear resistance as well as the capability to absorb shocks, impacts and pressure load, also it reduces the amount of tearing off.

The material for the medical devices is primary polymers, with at least one layer of a first polymeric component with high molecular weight, and at least a layer of a second polymeric component with low molecular weight. This combination of longer and shorter polymers provides the feature of the device comprising strength as measured by tear, tension and compression.

The main aspect of the invention is a medical device comprising a bio-compatible polymeric product with a layered structure comprising at least one upper layer of a first polymeric component, a middle layer of a second polymeric component, and at least one lower layer of a third polymeric component, wherein the chain length of the first polymeric component and the third polymeric component is longer than the chain length of the second polymeric component.

The essence of the present invention is the selection of the composition of the different polymer layers as well as the selection of the number of polymer layers comprising first, second and third polymeric components, as well as thickness of said polymer layers and also size and position of an optional layer of the second polymeric component.

Another embodiment of the present invention provides for layers of polyolefinic polymers and resins. Within the context of the present invention, a polymer is defined as an organic compound having repeating units of similar or different

monomers. A resin is defined herein as a partially cured polymer having utility as a mouldable material suitable for curing into a solid article.

In an embodiment the polymers and resins of the polymer layers of the present invention may be polyolefinic polymers, polyethylene, polypropylene, polyacrylates, polystyrene, polytetrafluorethylene, polyvinylalcohol, polyethylene oxides, polyvinylpyrrolidon, polysilanes, polyurethanes, polyethers, polyamides, polyesters, polyalkyl acrylates, nylon, rubber and epoxy resins. It should be understood that the above list of polymers is not exhaustive, and other polymers may also be employed in the present invention. Preferred is polyethylene and polypropylene. Most preferred is polyethylene.

Preferably, the polymer materials of the first, second and/or third polymer layer may be from the group of polyethylenes or the group of polypropylenes such as polyethylene (PE), polypropylene (PP), high molecular weight polypropylene (HMWPP), high molecular weight polyethylene (HMWPE), ultra high molecular weight polyethylene (UHMWPE) and ultra high molecular weight polypropylene (UHMWPP), high density polyethylene (HDPE), low density polyethylene (LDPE), high density polypropylene (HDPP) and low density polypropylene (LDPP), ultra high density polyethylene (UHDPE), ultra high density polypropylene (UHDPP), cross-linked polyethylene, non-cross-linked polyethylene, cross-linked polypropylene, and non-cross-linked polypropylene. In this embodiment of the present invention, any combination of polymers listed above, or their equivalents, may be used.

First polymeric and third polymeric component

The polymers comprising the first polymeric component and the third polymeric component are preferable above 100 monomer units, such as above 1,000 monomers units, for example above 10,000 monomer units, preferable above 20,000 monomer units, more preferable above 30,000 monomer units, further preferable above 40,000 monomer units, yet further preferable above 50,000 monomer units, most preferable above 60,000 monomer units.

The polymers of the upper and lower layer comprising first and third polymeric components of the present invention have preferably molecular weights ranging

between 1,000 and 100,000,000 such as between 10,000 and 75,000,000, for example between 50,000 and 50,000,000, preferable between 75,000 and 25,000,000, more preferable between 100,000 and 1,000,000, further preferable between 200,000 and 800,000, yet further preferable between 300,000 and 700,000 most preferable between 400,000 and 600,000

In a preferred embodiment the polymers comprising the first polymeric component and the third polymeric component are comprises long polymer fibres, filaments or strands produced from the polymers presented above, preferred polymers to produce said fibre and filaments may be selected from the group of poly-ethylenes including, but not limited to, high molecular weight polyethylene (HMWPE), ultra high molecular weight polyethylene (UHMWPE), high density polyethylene (HDPE), ultra high density polyethylene (UHDPE), cross-linked polyethylene and non-cross-linked polyethylene. The most preferred polymer of the invention is fibre produced from UHMWPE. The polymers of the first polymeric component and the third polymeric product provide strength and wear resistance to the device.

A preferred polymer of the upper and lower layer of the invention is UHMWPE, and a preferred combination is UHMWPE and HDPE.

Additional components of the upper and lower layer polymeric material may be incorporated into the matrix in a braided, woven, spongy or spiral pattern, the fibres and filaments comprising the additional components having reinforcing properties. The fibres may be inorganic fibres such as carbide, nitride, boride, carbon and oxide fibres, or the reinforcement may be of organic origin such as Dacron.

The second polymeric component

The middle layer comprising a second polymeric component can be constructed from short chain polymer material; the polymers may be selected from the polymers presented above. Short chain polymers may have less than about 100 units, such as less than about 90 units, for example less than about 80 units, preferable less than about 70 units, more preferable less than about 60 units, further preferable less than about 50 units, yet further preferable less than about 40 units, most preferable less than about 30 units. The short chain polymer material may not have cross links and only weak Van der Waals forces between chains, The molecular weight is

preferably less than about 10,000, such as less than about 9,000, for example less than about 8,000, preferable less than about 7,000, more preferable less than about 6,000, further preferable less than about 5,000, yet further preferable less than about 4,000, most preferable less than about 3,000.

Preferred polymers to produce the middle layer constituting film, core and inlay polymer layers may be selected from the group of poly-ethylenes or from the group of polypropylenes including, but not limited to polyethylene (PE), polypropylene (PP), high molecular weight polyethylene (HMWPE), high molecular weight polypropylene (HMWPP), high density polyethylene (HDPE), high density polypropylene (HDPP), low density polyethylene (LDPE) and low density polypropylene (LDPP). Preferred is short chain polymer material such as LDPE and LDPP. Further preferred are polymers which are branched. Most preferred is short chain polymer material of polyethylene.

From the above mentioned first, second and third polymeric components different polymer layers comprising fabric, film, core and inlay are constructed. These polymer layers are further described below.

Fabric

From the longer polymers comprising the first and/or the third polymeric component as previously described a fabric may be constructed constituting the upper and lower layers of a medical device. Preferred is a fabric of UHMWPE fibre. The fabric corresponds to the first and/or third polymeric component as described elsewhere herein.

Within the fabric, the first polymeric component and the third polymeric component are preferably in the form of fibre. Methods of construction of fibres are known to persons skilled in the art. The polymers may be aligned and/or spun into fibre by gel spinning or filaments, which again may be spun into strands. From said fibres and/or filaments and/or strands the layers of polymeric materials may be manufactured.

The fabric may be produced into a suitable shape, said shape is preferably constructed by weave, knit, crochet, stitch, plait, interlace, intertwine, interlock, link

or unite the fibre and/or filaments and/or strands in other ways such as non-woven techniques. Preferable the fabric is woven or knitted.

In an embodiment the fabric can be woven using different techniques, said techniques include but is not limited to cord woven, linen woven, mat woven, Celtic woven and twill woven. Persons skilled in the art know variations of these techniques, said variations is hereby incorporated.

According to an embodiment of the invention the polymer fibres are woven into a squared fabric comprising intercepts with angles of 90 degree. The dimension and weaving style of the fabric is optional, preferred is a binding style of 3:1 (twill).The fabric can if the thickness allows it be rolled into a roll, from which suitable pieces are detached before the stratified polymer product is constructed. Products which can be used comprises but is not limited to fabric of Dyneema® from DSM, Spectra® from Allied Signal Inc. Preferably the fabric is workable in the process of construction of the medical device as described elsewhere herein.

In another preferred embodiment the fibres, filaments or strands of the constitution described above are woven into the fabric in a shape suitable for the shape of the polymeric product. The shape of the fabric can be any possible shape including but not limited to round, oval, triangle, quadrangle, square, rectangular, pentagon, hexagonal etc. and may be symmetrical or asymmetrical in any direction. Preferred shapes of the fabric are quadrangle and round.

In one embodiment the fibres in each layer of the fabric are positioned over each other making a structure wherein the angles of the intersect are of 1 to 179 degree, such as in angles of 40 to 150 degree, for example such as in angles of 60 to 130 degree, such as in angles of 70 to 110 degree, for example such as in angles of 80 to 100 degree, such as in angles of about 90 degree. Most preferred is intersects of fibre and strands in angles of about 90 degree.

The thickness of the fabric is preferably determined by thickness as well as the number of fibres and/or filaments and/or strands and the distance between these fibres, filaments and strands in the fabric. The overall thickness of the fabric is preferably between 0.001 mm and 3 mm, preferred is between 0.01 mm and 2 mm,

more preferred is between 0.02 mm and 1.5 mm, further preferred is between 0.03 mm and 1.0 mm, yet further preferred is between 0.04 mm and 0.08 mm, most preferred is between 0.05 mm and 0.06 mm.

In an embodiment the area weight of the fabric is preferred between about 10 g/M^2 and 500 g/M^2 preferred is an area weight of between about 50 g/M^2 and 300 g/M^2, more preferred is an area weight of between about 75 g/M^2 and 250 g/M^2, further preferred is an area weight of between about 100 g/M^2 and 200 g/M^2, yet more preferred is an area weight of between about 125 g/M^2 and 175 g/M^2, even more preferred is an area weight of between about 140 g/M^2 and 160 g/M^2, most preferred is an area weight of about 150 g/M^2.

The fibres, filaments and strands from which the fabric is produced according to the description herein, may have a fibre diameter preferably between 100 and 650 dtex. The fibre diameter of the warpyarn is preferably about 300-650 dtex, more preferably about 350-550 dtex, further preferably about 400-500 dtex, most preferably about 430-460 dtex. The weftyarn is preferably about 100-350 dtex, more preferably about 150-300 dtex, further preferably about 175-250 dtex, most preferably about 210-230 dtex.

The fabric need not be constructed of fibre or filaments or strands with equal thickness. A woven fabric where some of the strands have a larger thickness than the rest may be used. In this way e.g. every second, every third or more strands in between may have a larger thickness than the rest of the strands of the fabric.

The fabric described herein may also be constructed by strands of different polymers. Said different polymers may be selected among the polymers listed herein above. Two or more polymers may be used in the construction of the fabric.

In an embodiment the thickness of the fabric may vary according to different thickness of the polymer strands as described above or different polymers utilised to construct the fabric. Also different numbers of strands pr cm may be used.

In an embodiment the surface dimension of one or more inner layers of fabric may be smaller than the total surface dimension of a medical device. Smaller layers of fabric may enclose inlays.

In another preferred embodiment the fabric has a high tensile strength and a high wear resistance. The degree of tensile strength is determined by the polymer utilised to produce the fibre and the thickness of the fibre. The tensile strength of the strand or fibre in a fabric is preferably above 1.0 GPa, such as above 1.2 GPa, preferable above 1.4 GPa, more preferable above 1.6 GPa, further preferable above 1.8 GPa, yet further preferable above 1.9 GPa, most preferable above 2.0 GPa.

In another embodiment the tensile strength of the strand or fibre in a fabric is preferably above 0.05 GPa, such as above 0.1 GPa, preferable above 0.3 GPa, more preferable above 0.5 GPa, further preferable above 0.7 GPa, yet further preferable above 0.8 GPa, most preferable above 0.9 GPa.

Although the term 'fibre' is used in the description of fabric comprising the first and third polymeric components, filaments and/or strands and/or other components comprising long chains of polymer units may be used instead of fibres.

The fabric constitute a reinforcement fabric or tissue of the device.

Film, core and inlay

The middle layer of the polymeric product comprises a second polymeric component. Said polymeric component may be any short chain polymer material or low density polymer material as described above. Also chopped strands of long chain polymer material such as fibre and/or filaments and/or strands may be utilised as short chain polymer materials. Preferred is when the chopped strands comprising short chain polymers are moulded into a matrix with low density polymer material or a polymer comprising the second polymeric component as described elsewhere herein.

By 'chopped strands' is meant shorter chains or strands cut from fibres and/or filaments and/or strands.

In an embodiment said middle layer comprising polymer layer comprises a film, a core or an inlay.

The polymer layers 'film', 'core' and 'inlay' may be produced of similar or substantially similar or different polymers. Preferred are polymer layers of film, core and inlay which are produced by similar polymers. Polymers suitable to be used are described above.

The differences of film, core and inlay may be the dimensions of the polymer layers. Said dimensions are determined according to the function of the polymer layers. The film, core and inlay may differ in thickness from each other, but may also have similar thickness, whereby film and core sometimes can substitute each other in the composition of the medical device.

The visual difference of film and core is preferably based on the thickness, where the film in general is thinner than the core. The main purpose of a film layer is to attach two layers of fabric to each other, and simultaneously provide the device with characteristics such as capability of absorbing shocks, impacts and pressure load.

The core may also attach fabrics to each other, and provide the same characteristics to the device as the film, but the core may be utilised in devises subjected to higher degree of impacts and pressure load than to devises comprising no core layer.

The difference of core and inlay may be based on the length and width of the polymer layers, the inlay may be smaller than a core. The function of an inlay is to absorb shocks and pressure in specific areas of a medical device. An inlay of one device may be larger than a core of another device.

In an embodiment said middle layer comprises a film or core or inlay. The film and core comprises the polymers described above, and may be constructed by melting said polymers. Mixtures of polymers may be used to construct the film, core or inlay. The melted polymeric mass may be formed according to any method possible, said methods are known to persons skilled in the art. Said methods comprises but are not limited to blow moulding, extruding, foil moulding, injection moulding,

compression moulding, preferred is blow moulding. Preferred methods are moulding of the melted polymeric mass in small or large open moulds/vats or injection moulding, the thickness of the material is optional, but is chosen not to be changed followed solidification. Following solidification the solidified polymeric matrix can be cut or punched or stamped out to a suitable dimension.

The suitable dimension of the film may be determined in accordance to the scope of the application. The preferred application of the film is as a thin polymer layer between two layers of fabric, in this situation the size comprising length and width of the film is at least the length and width of the polymeric material used to produce a medical device, hereby the film may be squared, circular or any other dimension as any surplus of polymer material is removed following formation of the medical device.

In an embodiment the device is constructed from layers of fabric, film, core and/or inlay where said layers each has a dimension suitable to construct the device without any process of removing surplus of polymer layers. In this process the polymer layers of film, core and/or inlay may have dimensions smaller than the outermost layer of fabric. To adjust the size of the polymer layers to the form of the device to be produced, inner layers of fabric may be smaller than the outermost layer of fabric. The outermost layer of fabric which constitute the inner side of a medical device may also be smaller than the outermost layer of fabric which constitute the outer side of a medical device.

The suitable dimension of the core may also be determined in accordance to the scope of the application. The preferred application of the core is as a polymer layer between two layers of fabric, where the core fills in all the area comprising length and width between said two layers of fabric, in this situation the size of the core is at least the length and width of the polymeric material used to produce a medical device, hereby the core may be squared, circular or any other dimension as the surplus of polymer material is preferably removed following formation of the medical device.

The suitable dimension of the inlay may also be determined in accordance to the scope of the application. The preferred application of the inlay is as a polymer layer,

which fills in part of the area between two layers of fabric or film; hereby the inlay may comprises any dimension appropriate for the purpose of the medical device. The inlay is moulded into the appropriate dimension or it is cut into the appropriate dimension.

The preferred thickness of the core and of the inlay is chosen in accordance with a reduction of said thickness in the construction of the device. During the pressing process the thickness of the core and the inlay may be reduced by up to 50%, as the short chain polymers of the inlay and/or of the core are pressed in between layers of fabric. By this pressing process the other dimensions comprising length in two dimensions of the core and inlay may increase as the thickness decreases.

Objects of non-polymeric material or objects of polymeric material different to the material which the core or inlay is made of, may be placed within core or inlay. Said objects may be but is not limited to metal globes or metal sheets. The objects may be incorporated in the inlay or core in the moulding process or may be placed in holes made in the inlay or core in the moulding process or made afterwards. An examples of objects in an inlay is metal globes in the inlay.

The difference of film and core has a fluid borderline, whereby the utility of film and core may be interchangeable. Also the difference of core and inlay has a fluid borderline, whereby the utility of core and inlay may be interchangeable

In an embodiment the film is prepared as described elsewhere, the film is preferably between 0.001 and 5 mm thick, such as between 0.01 and 5 mm, preferable between 0.1 and 4 mm, more preferable between 0.2 and 3 mm, further preferable between 0.3 and 2 mm, yet further preferable between 0.4 and 1.5 mm, most preferable between 0.5 and 1 mm.

The core or inlay which are also prepared as described elsewhere, is preferably between 0.1 and 30 mm thick, such as between 0.2 and 25 mm, preferable between 0.3 and 21 mm, more preferable between 0.4 and 17 mm, further preferable between 0.5 and 13 mm, yet further preferable between 0.6 and 10 mm, most preferable between 0.7 and 7 mm.

In an embodiment the surface dimension of one or more layers of film may be smaller than the total surface dimension of a medical device. Smaller layers of film may be used on one or more sides of smaller size fabric.

In a preferred embodiment the polymers as described above are of medical grade.

The film, core and inlay comprises short chain polymers. Examples of characteristics, properties and additives of said short chain polymers are shown in the following tables

Characteristics	Method	Unit	Value
Melt index	ISO 1133	G/10 min	0.8
Density	ISO 1183	G/cm^3	0.924

Property	Method	Unit	Value
Yield Stress	ISO R527	Mpa	12
Tensile Strenght at break	ISO R527	Mpa	14
Elongation at break	ISO R527	%	650
Modulus of elasticity	ISO 527-2	Mpa	240
Melting point	ISO 11357-3	°C	114
Vicat temperature	ISO 306	°C	98

Mechanical properties measured on a moulded plaque.

More preferred examples of characteristics, properties and additives of said short chain polymers are shown in the following tables

Characteristics	Method	Unit	Value
Melt index	ISO 1133	G/10 min	2.18
Density	ISO 1183	G/cm^3	0.922

Property	Method	Unit	Value
Yield Stress	ISO R527	Mpa	11
Tensile Strenght at break	ISO R527	Mpa	10
Elongation at break	ISO R527	%	550
Modulus of elasticity	ISO 5527	Mpa	210
Melting point	ISO 11357-3	°C	112

Melting point	ISO 11357-3	°C	94
Shore hardness	ISO 868		52

Mechanical properties measured on a moulded plaque.

Processing at an advised temperature of 150°C to 180°C.

Additives may be used in the short chain polymer material, preferred is none slip agent and none anti-blocking additives.

An example of a short chain polymer material is Lacqtene® FE 8000 from Atofina.

Production of the layered polymeric product

In one embodiment the polymeric product from which medical devices are constructed comprises polymer layers in a sandwich or laminated format with at least three polymer layers, where the polymer layers are fused together by a heating process. The middle or at least one inner layer differs from the two or more outer layers, hereby the polymer layers constitute a film, or a core or an inlay with at least one layer of fabric on each side. The fabric provides a high wear resistance and high tensile strength, while the inlay and core and to some degree also the film absorbs shocks.

In the production of a medical device, the different polymer layers as described above are laminated in accordance to the required characteristics of said medical device. In an embodiment the middle or at least one inner layer of the polymeric product constitute a core or a film, on each side of the core or film a fabric is positioned. In a preferred embodiment the polymeric product are composed of three layers where the fabrics at the different sides of the core have equal constitutions.

The layers of fabrics within a device can be different according to the polymers utilised to produce the fabrics or the fibres or strands within the fabrics may be different, or the fabrics are produced in different ways, also the fabrics can have different thickness. In a cup shaped device the outer part of the cup may comprise a thicker fabric than the inner part of the cup, hereby increasing the wear resistance of the outer part.

In another embodiment the polymeric product are composed of more than three layers, where, in between two fabrics a film or a core or an inlay are positioned. The individual layers of fabric may be substantially identical, identical or different in composition. Also the layers of film, core and inlay may be substantially identical, identical or different in composition.

In an embodiment the number of the layers core, film, inlay and fabrics differ across the polymeric product. The number of the layers can also vary in different areas of the polymeric product. The outermost layer of each side of the product must be fabric, and two layers of fabrics have a film or a core or an inlay in between. With varying number of layers across the polymeric product, also the thickness of the product varies. Some areas may contain an inlay other areas may be without said inlay.

In a further embodiment the outermost layer of the product can be a film. Said film is positioned next to a layer of fabric. Both sides of a product may have film layers as the outermost layers or only one side is a film layer. In case the medical device has more than two outer sides, one or more sides may be a film layer.

The polymeric product can also constitute two or more layers of fabrics on each side of a core or an inlay, and said two or more layers of fabrics may have a film of a polymer layer in between each fabric. Following heating of the layered polymeric product the film and/or core and/or inlay mechanically connect or bond together two layers of fabric.

Layers of film and/or core and/or inlay in a device may be different according to the polymers utilised to produce said layers. The polymers may be of different types, preferred polymers are mentioned herein above. Also the polymers may be mixtures of different types of polymers or mixtures of polymer chains of different length or both.

Film may have a higher adhesiveness than core and inlay.

The number of layers of fabric in a medical device is optional, as well as the number of layers of film and fabric and inlay can differ on each side of a core or of an inlay. The number of layers of fabric in a medical device is preferably between 1 and 100, such as between 2 and 50, for example between 2 and 40, preferable between 2 and 35, more preferable between 2 and 30, further preferable between 2 and 25, yet further preferable between 2 and 20, most preferable between 2 and 10.

Also the number of layers of film in a medical device is optional, the number of layers of film is preferably between 0 and 100, such as between 1 and 50, for example between 1 and 40, preferable between 1 and 35, more preferable between 1 and 30, further preferable between 1 and 25, yet further preferable between 1 and 20, most preferable between 1 and 10.

In addition the number of layers of core in a medical device is optional, the number of layers of core is preferably between 0 and 100, such as between 1 and 50, for example between 1 and 40, preferable between 1 and 35, more preferable between 1 and 30, further preferable between 1 and 25, yet further preferable between 1 and 20, most preferable between 1 and 10. The number of layers of film, inlay and fabric can be different at each side of a core.

The number of layers of inlays in a medical device is optional, the number of layers of inlay is preferably between 0 and 100, such as between 1 and 50, for example between 1 and 40, preferable between 1 and 35, more preferable between 1 and 30, further preferable between 1 and 25, yet further preferable between 1 and 20, most preferable between 1 and 10. The inlay can be positioned anywhere within the stratified polymer product between two layers of film or fabric. The inlay may be smaller than the entire area of the medical device, and the inlay may be located at any position within the medical device. Also the number of layers of film, core and fabric can be different at each side of an inlay.

Preferred layered compositions of the polymeric product of medical devices comprises but are not limited to the constitutions:

- fabric – film – fabric.
- fabric – core – fabric.
- fabric – film – core – film – fabric

- fabric – film – fabric – core – fabric – film – fabric.
- fabric – film – fabric – film – fabric – core – fabric – film – fabric – film – fabric.
- fabric – film – fabric – film – fabric – film – fabric – core – fabric – film – fabric – film – fabric – film – fabric.
- fabric – film – fabric – film – fabric – film – fabric – film – fabric – core – fabric – film – fabric – film – fabric – film – fabric – film – fabric.
- fabric – core – fabric – film – fabric – film – fabric.
- fabric – film – fabric – core – fabric – film – fabric – core – fabric – film – fabric.
- fabric – film – fabric – film – fabric – film – fabric – core – fabric – film – fabric.
- fabric – film – inlay – film – fabric.
- fabric – film – fabric – film – inlay – film – fabric – film – fabric.
- fabric – film – inlay– film – fabric – film – fabric – film – fabric.
- fabric – film – inlay– film – fabric – film – inlay – film – fabric.
- fabric – film – inlay – film – fabric – film – fabric – film – inlay – film – fabric.
- fabric – film – inlay – film – fabric – film – inlay – film – fabric – film – fabric.
- fabric – film – inlay – film – fabric – film – inlay – film – fabric – film – inlay – film – fabric.
- fabric – film – inlay – film – fabric – film – fabric – film – inlay – film – fabric – film – inlay – film – fabric.
- fabric – film – inlay – film – fabric – film – fabric – film – fabric – film – inlay – film – fabric – film – inlay – film – fabric.
- fabric – film – inlay – film – fabric – film – inlay – film –fabric – film – inlay – film – fabric – film – fabric.
- fabric – film – fabric – inlay – fabric – film – fabric.
- fabric – film – fabric – film – fabric – inlay – fabric – film – fabric – film – fabric.
- fabric – film – fabric – inlay – fabric – film – fabric – film – fabric – film – fabric.
- fabric – film – fabric – inlay – fabric – film – fabric – film – fabric – inlay – fabric – film – fabric.
- fabric – film – fabric – inlay – fabric – film – fabric – film – fabric – inlay – fabric – film – fabric.
- fabric – film – fabric – inlay – fabric – film – fabric – film – fabric – inlay – fabric – film – fabric – film – fabric.
- fabric – film – fabric – inlay – fabric – film – fabric – film – fabric – inlay – fabric – film –fabric – film – fabric – inlay – fabric – film – fabric.

- fabric – film – fabric – inlay – fabric – film – fabric – film – fabric – film – fabric – inlay – fabric – film – fabric – film – fabric – inlay – fabric – film – fabric.
- fabric – film – fabric – inlay – fabric – film – fabric – film – fabric – film – fabric – film – fabric – inlay – fabric – film – fabric – film – fabric – inlay – fabric – film – fabric.
- fabric – film – fabric – inlay – fabric – film – fabric – film – fabric – inlay – fabric – film – fabric – film – fabric – inlay – fabric – film – fabric – film – fabric.
- film – fabric – film – fabric – film.
- film – fabric – core – fabric – film.
- film – fabric – film – core – film – fabric – film.
- film – fabric – film – inlay – film – fabric – film.
- fabric – film – fabric – film.
- fabric – core – fabric – film.
- fabric – film – core – film – fabric – film.
- fabric – film – inlay – film – fabric – film.
- fabric – film – fabric – inlay – fabric – film – fabric – film.

Wherein fabric comprises the first and/or third polymeric component as described elsewhere herein, and film, inlay and core comprise the second polymeric component as described elsewhere herein.

The layers of fabrics within a device may be similar or may be different in the construction. Also one or more layers of fabrics within a device may differ from the other layers of fabrics. Similar situations can be obtained regarding the film, inlay and core. Film, inlay and/or core of a single device may be different in construction.

By 'different in construction' is meant that the layers of interest can be produced by different materials or partly by different materials or the process of manufacture is different thus giving the layers different properties.

The constitutions of a product mentioned above may be surface coated by plasma polymerisation.

The polymeric material as described herein can also be used to cover prostheses of other materials, such as standard prostheses.

In another aspect of the invention the medical device comprises one or more layers of fabrics which may be surface coated by plasma polymerisation.

Features of the product

The thickness of the polymeric product is determined by the number of polymer layers and the dimension of these layers in accordance to the requirements of the medical device. The total thickness of the polymeric product is preferably between 0.001 and 40 cm thick, such as between 0.005 and 30 cm, preferable between 0.01 and 20 cm, more preferable between 0.02 and 10 cm, further preferable between 0.03 and 8 cm, yet further preferable between 0.04 and 5 cm, most preferable between 0.05 and 2 cm.
In another embodiment the preferred thickness of a device is about 3 mm.

The surface area of a medical device may be between 1 cm^2 and 200 cm^2.

The surface dimension of a medical device comprising the polymeric layered structure as described herein may be between 0.01 to 40 cm according to length and width, such as between 0.05 to 35 cm, for example between 0.09 to 30 cm, preferable between 0.1 to 25 cm, more preferable between 0.2 to 23 cm, further preferable between 0.3 to 19 cm, yet further preferable between 0.4 to 17 cm, most preferable between 0.5 to 15 cm. Other preferred sizes of the surface dimension of a medical device may be between 0.5 to 8 cm according to length and width, such as between 0.5 to 7 cm, for example between 0.5 to 6 cm, preferable between 0.5 to 5 cm, more preferable between 0.5 to 4 cm, further preferable between 0.5 to 3 cm, yet further preferable between 0.5 to 2 cm, most preferable between 0.5 to 1 cm.

The surface dimension according to length and width of layers of fabric in a medical device as described herein may be substantially equal, equal or different from the surface dimension of the medical device. Preferred is a size where any surplus of fabric is removed following manufacture of the medical device.

To enclose one or more inlays with fabrics, the size of fabric according to the surface dimensions length and width may be the same as for the inlay, substantially

the same as for the inlay or somewhat larger than the inlay. One or more inlays may be enclosed by two or more layers of fabric. Said layers of fabric may have surface dimensions adjusted to cover all the inlays, although the inlays may have distance between each other. Two or more inlays of a device may or may not be positioned in between the same two layers of fabric.

The surface dimension according to length and width of layers of film in a medical device as described herein may be substantially equal, equal or different from the surface dimension of the medical device. Preferred is a size where any surplus of fabric is removed followed manufacture of the medical device.

The surface dimension according to length and width of layers of core in a medical device as described herein may be substantially equal, equal or different from the surface dimension of the medical device. Preferred is a size substantially equal to the surface dimension of the medical device.

The surface dimension according to length and width of layers of inlay in a medical device as described herein may be substantially equal, equal or different from the surface dimension of the medical device. Preferred is a size where the inlay is smaller than the surface dimension of the manufactured medical device.

To increase the strength of the polymeric product, the layers of fabric may be turned according to each other, hereby the fibres of the different layers of fabric is positioned into different directions. The fabric may be turned between about 0 to about 90 degree, such as between 10 and 80 degree, preferred is between 20 and 70 degree, more preferred is between 30 and 60 degree, further preferred is between 38 and 52 degree, yet further preferred is between 42 and 48 degree, most preferred is about 45 degree in relation to the former and/or next layer of fabric.

Method for preparation

Polymers may be prepared by methods known to the person skilled in the art. Chemical catalysis, thermal induction or photo induction are anecdotal non-limiting examples of methods of preparing the polymers.

The polymeric product is prepared according to the descriptions above by connecting the stacked polymer layers by heating. The heating temperature is selected below the melting temperature of the fibre crystallites in order not to loose the crystallinity of the polyethylene fibres and to a level where the fibres of the fabrics are not melted, destroyed or damaged, ie. below 250 degree Celsius, and above the melting temperature of the polyethylene plastomer, ie. in the range between 80 and 250 degree Celsius, such as between 90 and 240 degree Celsius, preferable between 100 and 230 degree Celsius, more preferable between 110 and 220 degree Celsius, further preferable between 120 and 210 degree Celsius, yet further preferable between 130 and 200 degree Celsius, most preferable between 140 and 190 degree Celsius.

In an embodiment the heating temperature is preferably between 90 and 200 degree Celsius, such as between 95 and 195 degree Celsius, preferable between 100 and 190 degree Celsius, more preferable between 105 and 185 degree Celsius, further preferable between 110 and 180 degree Celsius, yet further preferable between 115 and 175 degree Celsius, most preferable between 120 and 170 degree Celsius.

In a further embodiment the heating temperature is preferably between 90 and 180 degree Celsius, such as between 95 and 170 degree Celsius, preferable between 100 and 160 degree Celsius, more preferable between 105 and 155 degree Celsius, further preferable between 110 and 150 degree Celsius, yet further preferable between 115 and 145 degree Celsius, most preferable between 120 and 140 degree Celsius

When heated the short chain polymers of the core or the film or the inlay penetrate into the fibres or filaments or strands of the fabrics, and hereby mechanically connect or bond the polymer layers to each other. In a preferred embodiment the temperature is selected to a level where the main part of the fabrics is not melted, but a thin layer constituting a low number of polymer chains or fibres of the outer part of the outermost fabrics of the polymeric product is melted. The heating process may be provided in vacuum and under pressure.

In a further preferred embodiment the temperature is selected to a level where the performances of the reinforcement fibres are not damaged.

The polymer product comprising stratified polymer layers as described above, which has been subjected to the heating process, may be stored at room temperature until use. The polymeric product is preferable capable of being stored for long periods of time, such as several years. Storing is performed in dry conditions at room temperature and in darkness or at least without direct sunshine to the product. Dry conditions may be humidity of about 10-90 %.

Shaping the medical device

In the heating process described previously or following a storage period of the fused polymer layers, the polymeric product comprising the polymer layers may be subjected to vacuum and may simultaneously be pushed or pressed into a mould to form the polymeric product. The vacuum process prevents the formation of bubbles and protects the polymer from oxidative degradation. Shaping can also be performed without vacuum but due to pressure optionally combined with heating the polymeric product.

The vacuum of the method described above may be below 500 mbar, preferable below 300 mbar, more preferable below 100 mbar, further preferable below 50 mbar, yet further preferable below 10 mbar, most preferable below 1 mbar.

To secure the desired shape of a device, the pressure of the device in the shaping process may be maintained until the polymer product is cooled preferable to room temperature. This cooling under pressure secures consolidation of the product.

The pressure in the process described above is a pressure high enough to press the product into a mould, the pressure may be a low pressure performed for a long period or a high pressure performed for a short period, or a pressure in between. Low pressure in this context is the pressure just enough to press the product into a mould.

The shape of the pressed polymer product may be any possible figure in each dimension where the shape may constitute a surface being flat, curved, waved, undulated, bent, bowed, crooked, while the overall shape of the device may be but is not limited to circular, oval, triangle, squared, rectangle, cubed, bowl, cup, crown,

cap, basin, heart, egg, kidney, figure of eight, preferred shape is cup or hemispherical. The thickness of the device may also vary.

The polymer product pressed into a shape as described above, may be stored at room temperature for long periods of time, such as several years.

In an embodiment the polymeric product may be produced with one or more apertures, holes, gaps, perforations or hollows. Said apertures etc. may constitute an improved attachment and/or optimise the function of the device. The improved attachment may be obtained without further processing as the apertures may constitute a shape of the device in a way that the device better fits into the location of the body. The apertures can also be utilised to fasten the device within the body.

Fastening methods are known to persons skilled in the art, and are hereby incorporated.

The apertures etc. may be created simultaneously with the shaping of the polymeric product, hereby the mould has points, tips or peaks, which create the apertures in the polymeric product. Another method of producing apertures etc. is to make a hole by a drill or another boring, cutting or pressing apparatus. Followed the formation of apertures etc. by drilling, cutting or pressing holes, the edge of the apertures on the polymeric device may be closed.

To the polymeric material may be attached a component, said component being polymeric or non-polymeric. The attachment may constitute part of a prosthesis or provide an anchorage point.

Collar

Following the shaping of the polymeric product as described elsewhere herein, surplus of polymeric material can be removed e.g. by cutting off. Cutting off the surplus of polymeric material leaves a polymeric product with right angle edges. These edges have to be rounded to secure no damage of the product is performed within the animal or human body when function as a medical device within said body.

In an embodiment the rim of the device may be treated to fix loose ends of fibre or strands. The rim may be closed by sewing or by fastening a polymer ring or a metal ring. When using a ring to close the rim of the device, said ring may be 0.5-5 mm thick, preferred is 3 mm.

In another embodiment a collar is placed on the medical device when surplus of material is removed. The collar can be moulded directly on the device e.g. by injection moulding.

The collar as described above can be of any material mentioned in the description of the first, second or third polymeric component . The collar material of the medical device can be the same material or a different material as actually used for the first, second or third polymeric component. Preferred is when the collar is of UHWMPE or LDPE. More preferred is collar of LDPE. Most preferred is when the collar is produced of the same polymeric component as actually used for the core or film, due to compatibility between the materials. Within the process the polymeric component of the collar may melt together with the polymeric component of the film and/or core.

In an embodiment a cup shaped medical device where the hat brim of surplus of material is removed a collar of LDPE is moulded directly on the cut edges by injection moulding.

Markers

In an embodiment markers are placed within the medical device. The markers can be used to visualise, trace or in other ways show the position of the medical device when inserted into a body. Visualisation can be performed by methods known to a person skilled in the art, which is hereby incorporated. One method is X-ray identification. The material of the markers can be any material, which can be placed within the polymeric material and can be detected from outside of the body.

In one embodiment the markers are contrast balls. Before closing the rim with a method described elsewhere, contrast balls are placed within the device. The contrast balls which can be any suitable colour such as but not limited to blue, red or

green, can be placed in small holes drilled in the device. The drilled holes can be made at a right angle to the surface established when surplus of material is removed. Fastening a ring to the device or moulding a collar as mentioned above closes the holes. The number of contrast balls are optional, in a cup device 3-10 contrast balls may be utilised, 7 contrast balls is preferred.

In another embodiment the markers are made of metal. The shape of the markers is optional. Preferred are balls of metal. More preferred are markers of stainless steel or tantalum. Most preferred are balls of stainless steel or tantalum. The markers are placed within holes of the medical device drilled from the cut edge appearing when surplus of material is removed. The number of markers is optional. The number of markers is preferably 1-10, such as 2, e.g. 3, such as 4, e.g. 5, such as 6, e.g. 7, such as 8, e.g. 9, such as 10. The placing of the markers may be optional. Preferably the markers are placed asymmetrically around the cut edge of the medical device. This asymmetric placement ensures the possibility to measure if the medical device changes position when implanted in the body. In a cup-shaped medical device the asymmetric placement of the markers is preferable an asymmetric placement according to the circle comprising the cut edge of the medical device, hereby it can be visualised within the body whether the cup rotates. The cut edge is closed with a method described elsewhere herein.

In a further embodiment the markers are small pieces of the marking material. The small pieces are placed within the core or inlay when these are moulded.

In another embodiment the markers are formed as threads, and are placed within the core, inlay, film or fabric when these are produced. Threads of markers can also be placed between the fabric and any of the core, inlay or film when the medical device is constructed from said components.

Finishing treatment of a medical device

The present invention in particular relates to material formulations intended to meet the specifications of durability, bio-compatibility, and strength. These properties are obtainable by treating polymer materials, such as polyethylene, polypropylene or polyvinylpyrrolidone or combinations and co-polymers thereof as well as precursor materials for polymerisation, with high-energy electrons, gamma rays, photons, mi-

crowaves, ion implantation, plasma treatment, annealing, thermal radiation or another radiation to obtain ideal durability and bio-compatibility of the new, modified material. Treatment of the above-mentioned materials with radiation leads to cross-linking of polymers and thereby generating new, modified materials. Preferably, the polymer material is a cross-linked polyethylene or polypropylene material. More preferably the polymer material is a cross-linked polyethylene material.

The properties of the materials to be obtained by the cross-linking process are preferably resistant to tear and wear; and have good compressibility.

The medical devicemay be packed in a pouch, which is suitable for irradiation. Preferred are pouches of aluminium, more preferred are laminated pouches of PE, aluminium and PET, where PE (polyethylene) comprises the inner of the pouches and PET (polyethylene-terephthalat) comprises the outer of the pouches.

A pouch with a medical devicemay be filled with nitrogen before it is made airtight. The medical devices are then subjected to irradiation to cross-link the polymeric material and sterilise the medical device.

In order to increase stability of the medical polymeric device the polymers of the shaped polymer product may be subjected to further treatment, such as cross linking. In a preferred embodiment the cross linking treatment is conducted in order to cross link only a fraction of cross linkable polymers in the product. Accordingly, the products may be cross-linked by radiation, the cross-linking of the polymers may also be done by other methods known to the person skilled in the art. Said radiation may be but is not limited to high-energy electrons, gamma rays, photons, and microwaves. Cross binding the polymers improve the strength of the product. A preferred radiation process is cross-linking of fibres using treatment with accelerated electrons. As the cross-linking process takes place in the amorphous polyethylene regions, the optimal dose will depend on the fraction of amorphous polyethylene in the final device. The optimal radiation dose is preferably close to the gelation dose of polyethylene and thus lie between 10-10,000 kGy (0.1 and 100 Mrad), preferred is between 10 and 300 kGy, most preferred is 200 kGy.

The radiation can be performed in one uninterrupted treatment, where the complete dose of radiation is given to the material. The radiation process may also be performed in pulsing or interrupting treatments, where the total dose of radiation is given in 2-15 shorter with an interval of 1 to 60 minute. Preferred is 25 kGy given eight times with 10 min interruption between each radiation treatment (total 200 kGy). More preferred are two times 25 kGy interrupted by 1 to 60 minutes and repeated 4 times with 10 hours to 1 day of interruption.

The radiation may be performed for the entire product or device or only part of the product or device is radiated by using a shield or screen between the irradiation source.

When using radiation, the radiation process described may be followed by annealing. The purpose of annealing is to eliminate long living free radicals by a heat treatment of 80°C for about 1-12 hours in vacuum. More preferred is 70-85°C for about 16-24 hours in an inert atmosphere. Preferred is when the inert atmosphere is Nitrogen.

Typically, a device is prepared by a process comprising the following steps:

- The device is formed under vacuum by pressing the laminated polymers in a mould of specified dimensions. The polymer is chosen from the above mentioned polymers.
- After hardening the material as formed, or after swelling in a suitable solvent, the device may be subjected to high-energy electrons, gamma rays or another radiation in order to create cross-linking which will modify the mechanical properties of the material to meet the preferred specifications.
- Finally, after removal of the swelling solvent, the surface of the material may be treated to achieve good surface properties as described elsewhere.

The medical devices may be subjected to annealing when they are irradiated. Annealing is performed in an oven at about 80°C for a few hours to remove residual free radicals. Or annealing is performed as described elsewhere herein.

Surface coating

The surface of the device can subsequently be treated to modify surface properties such as wetting ability and/or biocompatibility. This surface treatment can be performed by plasma treatment, chemical grafting or by a combination of plasma polymerisation and chemical grafting. The material contacting with the biological surfaces may be smooth, biocompatible, preferably self-lubricating, and it should be wear-resistant so that particles generated due to wear are avoided in that this could otherwise result in foreign body reactions and cause further trouble to the function of the part of organism where the medical device is located.

Furthermore, the surface material should preferably be a material or a combination of materials having self-repairing properties so that fissures, cracks or other ruptures on the surface do not exceed uncontrollable levels. However, the surface material is preferably continuous with the material of the rest of the device, e.g. the material may gradually merge into the material of the fabric, film or core of the device. In this context continuous means that the surface material cannot be pulled away from the material beneath.

The surface of the material may be chemically treated so as to soften, rigidify or lubricate the surface of the device or parts thereof. The surface of the material may be coated so that the coating confers these properties, or may be treated so as to chemically alter the surface of the device so as to confer any of these properties. Alternatively, certain polymer surfaces may be modified by means of thermal or photolytic energy.

Without being bound by theory it is also believed that a wetted surface reduces the risk of having the immune system recognising the device when implanted, which would otherwise lead to adverse effects of the device.

In one embodiment the surface of the devicemay be coated by a plasma polymerisation, using low-power plasma equipment. The monomers used for the plasma polymerisation are any monomer forming a hydrophilic polymer by plasma polymerisation. Preferred are monomers forming polyvinylpyrrolidone and poly-ethyleneglycol like polymers, most preferred is 1-vinyl-2-pyrrolidinone.

The surface coating performed as described above has a thickness of 1 to 700 nm, such as between 10 and 500 nm, preferable between 20 and 400 nm, more preferable between 30 and 300 nm, further preferable between 40 and 200 nm, yet further preferable between 50 and 100 nm, most preferable between 60 and 90 nm.

In another embodiment the surface coating performed as described above has a thickness of 1 nm to 5,000 nm, such as between 5 and 2,500 nm, preferable between 10 and 1000 nm, more preferable between 30 and 500 nm, further preferable between 40 and 400 nm, yet further preferable between 45 and 300 nm, most preferable between 50 and 250 nm.

Plasma is ionised gas. In an artificial plasma to be used for plasma treatment and plasma polymerisation, the concentration of ionised species is preferably 0.1-10 ppm. Two phases exists in artificial plasma: A gas-phase comprising an energi corresponding to the surrounding temperature, usually room temperature. In a plasma-phase ions and electrons have an energi at approximately 2-10 eV.

The artificial plasma may be established by exposing a gas with electric field. The pressure of the gas is preferably 0.01-1 mbar. The electric voltage utilised is dependent of different features such as the pressure, the composition of the gas, electrode configuration, the size of the polymerisation chamber, and frequencies of the electricity. The voltage is typically 200-10,000V.

In a preferred embodiment of the plasma polymerisation 1-vinyl-2-pyrrolidinone (VP)may be polymerised to polyvinylpyrrolidone (PVP) in a plasma with low energi. The plasma functions as an initiator for the polymerisation by formation of radicals in the surface of the element to be coated. From the radicals the polymerisation process takes place where monomers of VP polymerise to PVP. A low energy is necessary not to destroy the monomer VP in the gas-phase as well as the polymerised PVP. In a preferred embodiment the energy is 0.1-1 W/L.

In the plasma polymerisation treatment a carrier gas is used, preferred is an inert gas, such as argon or helium.

The chamber for performing the plasma treatment is constructed to perform a homogeneous surface coating of the device by the plasma polymerisation process.

The surface coated polymeric product is preferably sterilised by radiation or by heating. The radiation can be but is not limited to high-energy electrons, gamma rays, photons, microwaves.

The polymeric product may by cross-linked and sterilised simultaneously by treating with ionizing radiation or by heating. Preferred is cross-linking by radiation.

Mechanical properties

The structure of the material of a device may comprise a layered or laminated structure, a core of one material or one or more interposed layers with different properties enabling an overall function of the devise suitable for providing a spacer function and/or to exert pressure distribution of joints and/or to provide at least part of the sliding/rotating movement of joints by internal movement of the device, or relevant part of the device. However, it is preferred that the material itself does not comprise interposed layers resulting in sliding between the layers and thereby tear on the mating surfaces within the device. Accordingly, the body of the device should be one continuous solid or semi-solid material.

Mechanical properties for certain relevant polymers are described by Szycher (Szycher, M. (editor), sponsored by SPE, Society of Plastics Engineers, Inc. Biocompatible Polymers, Metals, and Composites, pp. 725-727, 757-61).

Mechanical properties of polymers are controlled by the elastic parameters, the three moduli: elastic, shear, and compressive moduli. These parameters are theoretically interrelated. A modulus is the ratio between the applied stress and the corresponding deformation. The reciprocals of the moduli are called compliances. The three elastic moduli have the dimension: force per unit area, (N/m^2 or Pa). Polymers are not normally ideal elastic bodies, but under load they show (time dependant) viscoelastic properties. By taking the load into consideration, the properties should be viewed according to this dilemma. Also, ideal elastic properties and ultimate properties are influenced by the viscoelastic properties.

Ultimate tensile strength is a measure of the stress required to cause the material to rupture in tension. Ultimate elongation is the percent stretch of the material before it ruptures in tension. Elongation (%) is measured as

$$\text{Elongation (percent)} = \frac{S_B - S_o}{S_o} \times 100$$

where S_B = observed distance between bench marks of the stretched specimen at rupture, and S_o = the original distance between bench marks.

Table 1 - Elastic parameters and their definitions

Elementary mode of deformation	Elastic parameter	Symbol
Isotropic (hydrostatic) compression	Bulk modulus bulk compliance or compressibility	K κ ($\kappa = 1/K$)
Simple shear	Shear modulus or rigidity Shear compliance	G J ($J = 1/G$)
Uniaxial extension	Tensile modulus or Young's modulus Tensile compliance	E S ($S = 1/E$)
Any	Poisson ratio	ν

Symbol	Definition
K	$\frac{\text{Hydrostatic Pressure}}{\text{Volume change per unit volume}} = \frac{p}{\Delta V/V_0} = \frac{pV_0}{\Delta V}$
κ ($\kappa = 1/K$)	reciprocal of foregoing
G	$\frac{\text{Shear force per unit area}}{\text{Shear per unit distance between shearing surfaces}} = \frac{F/A}{\tan\gamma} = \frac{\tau}{\tan\gamma} \approx \frac{\tau}{\gamma}$
J ($J = 1/G$)	reciprocal of foregoing
E	$\frac{\text{Force per unit cross-sectional area}}{\text{Strain per length}} = \frac{F/A}{\ln(L/L_0)} = \frac{\sigma}{\varepsilon} \approx \frac{F/A}{\Delta L/L_0}$
S ($S = 1/E$)	reciprocal of foregoing (strain/stress)
ν	$\frac{\text{Change in width per unit width}}{\text{Change in length per unit length}} = \frac{\text{lateral contraction}}{\text{axis strain}}$

Examples of ranges of the mechanical properties of the device are mentioned below. However, it should be contemplated that not all of the following characteristics may be fulfilled by the material of the prosthetic device since, as explained above, the numerous properties of the material are theoretically interrelated. Accordingly, conflict in fulfilling all parameters within the stated ranges may occur.

In one embodiment, the prosthetic device according to the invention is a device wherein the material of the device or at least the part of the device which exerts the pressure distribution and/or the part which exerts the sliding/rotating movement in the joint when the joint is loaded has/have one or more of the following propeties (under biological conditions (37°C, physiological salinity)): A compressive modulus (K) of at least 2000 MPa, a shear modulus (G) of at least 1 MPa and an elastic module (E) of at least 10 MPa.

Furthermore, certain requirements to the material under stress with forces that ultimately leads to disintegration can be expressed. Based on the elasticity parameters for the material, the properties of the material with respect to pressure, elongation, torsion and displacement in the range where the material responds elastic can be estimated. The ultimate limits should preferably be within ± 20% of the range of elastic response. As a consequence thereof, the limits for the ultimate properties

(ultimate compression strength, tensile strength, torsional strength, shearing strength) can be derived. Furthermore, the material should have an "ultimate percentage elongation" of at least 20%.

The materials according to the invention may be a “quasi elastic” material. Y. Shikinami and H. Kawarada, Biomaterials 19, 1998, pp. 617-635, discuss that many materials of biological origin, has a J-form in a stress vs. strain curve, whereas may synthetic materials has an S-form.

Preferably, the critical surface tension (γ_c) values should be within the "zone of biocompatibility" corresponding to the range of about 20-30 dynes/cm (as defined by Lelah M. D., Cooper, S.L., Polyurethanes in Medicine- CRC Press, Inc. Boca Raton, Florida, pp. 59-62 and 92-93).

Additives

A device constructed from the polymeric product may comprise biologically active additives. Medication or biological active substances can be used as additive to the device to facilitate healing, minimise destruction or with other therapeutic goals, such as pain relief, anti-inflammation, oncology treatments, stimulation of bone growth, and/or anti-infectious agents. Also, biological osteogenic or chondrogenic, chondral inductive, and/or chondral conductive materials may be added to the device. In particular patients suffering from osteoporosis or other bone degenerating conditions may benefit from having devices comprising osteogenic inductive materials implanted.

The medication or biological active substances can be used as additive to the device to facilitate cell growth, such as osteocytes, osteoblasts, chondrocytes, chondroblasts, mesenchymal cells. Cartilage inducing factor may for example be the factors described in US 4,774,322 and US 4,843,063.

In another preferred embodiment, additives such as lubricants, dyes, stabilizers and other process enhancing compounds are incorporated into the polymeric mixture. Such compounds may not necessarily enhance the strength or structural integrity of the final polymeric matrix, but do aid in the manufacturing process or enhance the overall appearance of the finished article. Examples of these compounds may be

long chain fatty acids and their salts, organic and inorganic coloring agents, free radical inhibitors, pH buffering agents and other materials known to enhance processing of polymers within the polymer industry.

In another preferred embodiment of the present invention, solid materials may be incorporated into the polymer or resin mixtures. Such solid materials may be, for example, chopped carbon or glass fiber or nanotubes, carbon black, graphite powder, talc, mica, polyamide fiber and other fillers commonly used in the polymer industry. As is known in the polymer industry, such fillers may be advantageously added to a polymer matrix for the purposes of enhancing strength, durability, bulk density, machineablity of the resulting polymeric article. Of, course the above list is not exhaustive and other uses of the fillers may also be contemplated.

Devices

One preferred device produced of the polymeric product described herein may be a substitution for cartilage. Said cartilage substitution may replace damaged cartilage between intact bones, or it may be part of a medical prosthesis comprising cartilage substitution.

A device produced of the polymeric product itself can be used as a growth medium and/or network for the natural or artificial cells, such as chondrocytes.

A device made from the polymeric product described above is capable of being formed to suit into parts of the organism as described elsewhere herein. Especially the device is suitable to be used in animals, such as mammals and human beings, preferred is human beings. The animals, to which the medical device may be utilised, may be selected from the group of mammals, such as but not limited to horses, dogs, cats, cows and monkeys.

In one embodiment the device is especially constructed to be utilised to support, hold, sustain, bear, carry, replace or displace any constitution within the mammalian body, which comprises high shape stability and good wear resistance.

The polymeric product is adapted not to interfere with intra-articular or other components when the device is in the body of a human.

The polymeric product as medical device may be but is not limited to be used as joint spacer implant in joints of knees, hip, shoulders, fingers, wrist, elbow, spine, neck, loin, toes and ankles. Especially the devices are used in diseased patients with osteoarthritic degeneration of joints. The implants with a smooth articulating surface oppose the diseased and degenerated cartilage joint facet, which is expected to lead to reduced force and stresses and improved mobility in the joint with consequent reduced pain and improved functional capacity of that joint.

The medical device as described herein may be produced in a number of sizes corresponding to the natural variety of the bones within the joint where it is intended to be used as well as to the differences in bone size due to the age or size of individuals.

Moreover, non-interference of the intra-articular components may be achieved by a hole which runs through the body of the device; that is to say the device may comprise a hole through which intra-articular components may pass. When loading the device, the slits may serve to pass intra-articular components through the body of the device. The slits in this embodiment run from the periphery of the body of the device to the hole through which the intra-articular components pass after the device is implanted or loaded.

Typically, and to at least some extent, the device is adapted in its structure and/or material composition to alleviate conditions associated with worn cartilage by providing a spacer function and/or to exert pressure distribution in the joint when the joint is loaded and/or to provide at least part of the sliding/rotating movement of the joint by internal movement of at least part of the device.

It is also an object of the present invention to provide a method for non-invasive locking of a device within a joint. In addition, the method is independent of use of cement or bony ingrowth of the device.

The device may completely or substantially completely surround an intra-articular component or other components of the organism.

A device made from the polymeric product described above is capable of being formed to suit any joint cavity of animals or human beings, therefore the device may for example be formed to fit into any one of the following joints: Hip joint, knee joint, ankle joints, shoulder joint, elbow joints, wrist, fingers, spinal column joints, such as for substituting intervertebral discs, and the jaw joint.

The medical device may constitute the surface of a prosthetic device. It may be the entire surface or part of the surface of a prosthetic device Also the device may constitute a complete or part of a hip endo-prosthesis, or it may be a breast prosthesis, a stent, a catheter, a heart valve or cartilage substitution.

Generally, the invention comprises the polymeric product as described above from which different medical devices may be manufactured, also the method of producing said polymeric product and medical devices is enclosed within the invention. Enclosed are methods of producing a polymeric product and medical devices as described above, as well as any combination of the features described for said polymeric product and said medical devices.

Another aspect of the invention is a method for producing a polymeric product, said method comprising obtaining a number of at least three polymer layers, and positioning the polymer layers in a sandwich composition, forming the sandwich composition of polymer layers by heating said composition followed by pressing it into a mould, where the heating and pressing processes are conducted in vacuum, and providing the polymeric product in a desired shape.

In the method for producing a polymeric product wherein the polymeric product is as described above, at least three polymer layers is utilised, these polymer layers constitute a core with at least one layer of fabric on each side, where the core differs in constitution from the fabrics, preferred is the method for producing a polymeric product where the fabrics at the different sides of the core have equal constitutions.

The method for producing a polymeric product comprise two or more layers of fabrics, where said two or more layers of fabrics have a film of a polymer layer in between each fabric.

In the method for producing a polymeric product the core and the film have similar composition except for the thickness of the polymer layer. The thickness of the polymer layers is as described above, in a preferred embodiment the film is between 0.01 and 2 mm thick, and the core is between 0.1 and 10 mm thick.

In an embodiment the method for producing a polymeric product comprises fabric, film and core where the structure of the fabric are composed of long polymer fibre, and the core and film are composed of short chain polymers. These polymer fibres can be selected among polyethylene (PE), polypropylene (PP) and polyvinylpyrrolidone (PVP). Most preferable is polyethylene (PE). The long polymer fibres are ultra high molecule weight polyethylene (UHMWPE) fibre and the short chain polymers may branched.

In an embodiment the method for producing a polymeric product comprises fabric which is manufactured, e.g., woven, into a shape or form suitable for the shape of the polymeric product. Said fabric consist of UHMWPE fibres in which the intersects are positioned as formerly described, preferably in angles of about 90 degree.

In an embodiment the method for producing a polymeric product comprises fabric which has high tensile strength and high wear resistance, and a core which absorbs shocks, pushes and strokes.

The method for producing a polymeric product comprises arranging the polymer layers in the order of fabric, film and core in accordance to the description above. The most preferred constitutions are listed above. The polymer layers are heated, and under vacuum the polymeric product is pressed in to a mould. The device, which is formed, is treated by ionising radiation, to further cross bind the polymers and thereby improve the strength of the product. The product is further subjected to annealing to ensure all linking has appeared.

In an embodiment the method for producing a polymeric product comprises surface coating of the annealed polymeric product and further the polymeric product is sterilised by ionising radiation or by heating.

In another embodiment the method for producing a polymeric product comprises annealing the polymeric product before it is subjected to surface coating.

In a further embodiment the method for producing a polymeric product comprises simultaneously cross-linking and sterilisation of the polymeric product by treating with ionising radiation or by heating.

In an embodiment the method for producing a polymeric product comprises surface coating of the polymeric product, as formerly described.

In a preferred embodiment the method for producing a polymeric product comprises production of the polymeric product where the shape and size of the polymeric product can be any possible to produce by pressing into to a mould, said mould forming a polymeric product which can be flat or round or in between and where the three-dimensional shape can be any possible forming by pressing into a mould.

The polymeric product can be utilised to produce a prosthetic device comprising polymer layers, the order of the polymer layers, and the method of production of the polymeric product as described above.

Preferred is a method of producing a prosthetic device of three polymer layers, which constitute a core with at least one layer of fabric on each side. Another preferred constitution is a core which at each side has two layers of fabric with a film in between. A further preferred constitution is a film between two layers of fabric.

In a preferable embodiment of the method the prosthetic device are produced from polymer layers composed of a polymer selected among polyethylene (PE), polypropylene (PP) and polyvinylpyrrolidone (PVP). Most preferable is a prosthetic device wherein the polymer layers are composed of polyethylene (PE).

In a further preferable embodiment of the method the prosthetic device are composed of fabrics of long polymer fibre, which preferable are ultra high molecule weight polyethylene (UHMWPE) fibre or other polyethylene fibre as previously described, whereas the core and the film are composed of short chain polymers, the short chain polymers may be branched.

The fabric is of medical grade and is woven into a shape suitable for the shape of the polymeric product. The shaping and physical characteristics is determined by the arrangement of the UHMWPE fibres, said fibres can have intersects in angles as described formerly.

In a preferred embodiment the prosthetic device has a high tensile strength and a high wear resistance due to the properties of the fabrics, whereas the core absorbs shocks, pushes and strokes.

The polymeric constitution of the prosthetic device is obtained in accordance with the details given above where the polymer layers are heated, subjected to vacuum and pressed into shape in a mould, and further treated as described above.

Examples

Example 1

Artificial Cartilage Cup

The artificial cartilage cup is an artificial joint spacer made to replace the missing or damaged cartilage so the joint can stay mobile.

The cup is based on a sandwich construction with a LDPE core reinforced on both sides with UHMWPE fiber fabric.

At the edge metal markers makes it possible to trace the cup when implanted.

The round LDPE collar of the cup makes a cup without sharp edges and captures the metal markers.

Finally a crosslinking of the polymer improves the performance of the LDPE core.

The production process includes the following steps:

- **Injection moulding of base LDPE disk**
  The LDPE disk is made of pellets/granulates in the injection moulding process. The disk is approximately five mm. thick and 134 mm in diameter. One standard disk size will later be formed to different size of cups.

- **Pressure consolidation with UHMWPE fiber fabric**
  Two pieces of 20X20 cm UHMWPE fiber fabric are placed on each side of the disk and the sandwich are pressed to form a cup with a surplus material like an irregular hat brim.
  Different cup sizes are produced and identified by an individual number.

- **Shaping the cup by cutting off excess material**
  Cutting off the hat brim leaves a cup with right angle edges.

- **Drilling of cup holes and mounting of metal markers**
  Metal markers in the cup make tracing the cup in the body possible. For the first test production, the markers are tantalum balls, and for later production, the markers will be stainless steel balls.

- **Injection moulding of LDPE-collar on cup**
  The metal markers are fixed, and LDPE-collar covers the right angle edges.

- **Packaging with nitrogen gas**
  In a packing machine, the cup is packed in an aluminum pouch with nitrogen gas, and the pouch is sealed to prevent oxygen from being in contact with the cup. Oxygen will hinder the later crosslinking process, as it reacts with the free radicals. The aluminium pouch is put in a shipment box, ready for sending to the crosslinking plant.

- **Crosslinking and Sterilization**
  The cup goes to the irradiation plant, is irradiated and returns to the production area. The irradiation forms free radicals. The free radicals are very reactive places in the polymer material, which react to form crosslinking in the polymer. The irradiation dose is about 200 kGy.

- **Annealing**
  Just after the irradiation process, there are still free radicals. In the annealing process, the free radicals form crosslinking. The annealing proc-

ess is a heating at approximately 75°C, which speeds up the crosslinking reaction without softening the cup. The process is slowly running even at room temperature, but might take about one month. The temperature must be at a relatively low level in order to avoid softening and deforming of the cup.

- **Final packing, releasing and storing**
  The cup is packed in inner box, labelled and instructions for use are supplied. The product is released after a quality check, and stored at the subcontractor.

Example 2

The cup-shaped medical device constructed as a three layered device comprising fabric-film-fabric was tested to assess wear properties using a machine intended to simulate the tribological conditions encountered in the human hip joint.

In this example a test machine '8800 Instron System' has been used.

Results: Following simulation where the device has been treated by 1,000,000 movements of a 100 Kg person, no debris of the material has been observed.

The simulation was continued to 15,000,000 cycles with a load pattern simulating walking. The load varied between 2500 N and about 150 N and the cup rotated in a rotation angle between +15 and -15 degree. The test was regularly stopped with intervals around 1 million cycles, and the specimen was taken out for inspection and photographing.

From 5 to 15 million cycles the thickness of the specimen was measured at each inspection. The wear rate is approximately 30-40 μm per 1 million cycles.

Example 3

Knee joint

The artificial polymer composite intraarticular implant with improved surface friction modalities should be bipolar with femoral component covering the cartilage area of the medial and lateral femoral condyles, and adjustments and alignment according to cruciate ligaments should be performed.

The thickness is between 2 to 4 mm. The shape mimics the articular surface of conventional total knee arthroplasties.

The tibial component is constructed in same material as above, and the shape and contour follows the meniscus including the central joint area. The implant is connected with an anterior bridge in front of the attachment of the anterior cruciate ligaments attachment on tibia.

Both components are unconstrained to each other and unconstrained to the femoral and tibial parts of the human joint.

The fixation or stability of the implant is dependent on macrostructure of the bony parts and the joint capsule. The stiffness of the implant ensures no roll up phenomenon of each implant component.

Example 4

Ankle joint

The artificial polymer ankle joint spacer implant consists of a material close to that mentioned in the example of knee joint.

The implant is monopolar and its extension corresponds to the cartilage area of the talar bone of the ankle joint. The thickness is between 2 to 4 mm.

The rim of the implant possess a softer rim, holds the implant during loading and flexion and extension.

Example 5

Shoulder joint

The artificial polymer shoulder spacer implant consist of a material close to that mentioned in the example of knee joint.

The implant is monopolar and its extension corresponds to the cartilage area of the glenoid cavitate of the shoulder joint plus some extension which may be 0.5 to 3 cm, which articulates with the cartilage area of the head of humerus. The thickness is between 2 to 4 mm. The implant will be excavated superiorly according to the tendon of the long biceps muscle, and it should respect the rotator cuff, accordingly.

The rim of the implant possess a softer rim, holds the implant during loading and flexion and extension, abduction, inner and outer rotation.

Claims

1. A medical device comprising a bio-compatible polymeric product with a layered structure comprising
   - at least one upper layer of a first polymeric component,
   - a middle layer of a second polymeric component, and
   - at least one lower layer of a third polymeric component,

   wherein the chain length of the first polymeric component and the third polymeric component is longer than the chain length of the second polymeric component.

2. The medical device according to claim 1, wherein the first polymeric component and the third polymeric component is above 100 monomer units, such as above 1000 monomers units, for example above 10000 monomer units, preferable above 20000 monomer units, more preferable above 30000 monomer units, further preferable above 40000 monomer units, yet further preferable above 50000 monomer units, most preferable above 60000 monomer units.

3. The medical device according to any of the claims 1-2, wherein the first polymeric component is selected from polyacrylates, polystyrene, polyethers, polytetrafluorethylene, polyvinylalcohol, polyethylene, polypropylene, polyethylene oxides and polyvinylpyrrolidon.

4. The medical device according to any of the preceding claims, wherein the second polymeric component is selected from polyacrylates, polystyrene, polyethers, polytetrafluorethylene, polyvinylalcohol, polyethylene, polypropylene, polyethylene oxides and polyvinylpyrrolidon.

5. The medical device according to any of the preceding claims, wherein the third polymeric component is selected from polyacrylates, polystyrene, polyethers, polytetrafluorethylene, polyvinylalcohol, polyethylene, polypropylene, polyethylene oxides and polyvinylpyrrolidon.

6. The medical device according to any of the preceding claims, wherein the first polymeric component and the third polymeric component are substantially identical.

7. The medical device according to any of the preceding claims, wherein the polymeric components comprises a copolymer of polyethylene and/or polypropylene, preferable of polyethylene (PE).

8. The medical device according to any of the preceding claims, wherein the first and third polymeric components are composed of long polymer fibre, and the second polymeric component is a short chain polymer material.

9. The medical device according to any of the preceding claims, wherein the first and third polymeric components are ultra high molecule weight polyethylene (UHMWPE) fibre.

10. The medical device according to any of the preceding claims, wherein at least one upper layer and the at least one lower layer each are composed of at least two layers of polymeric fabric constructed of said first and third polymeric components, and at least one layer of polymeric film, said polymeric film constitutes a layer between two layers of said polymeric fabrics.

11. The medical device according to claim 10, wherein the polymeric components of the middle layer and the polymeric components of the film are substantially identical.

12. The medical device according to any of the claims 10-11, wherein the fabric is produced in a shape suitable for the shape of the medical product

13. The medical device according to any of the claims 10-12, wherein said shape of the fabric is constructed by weave, knit, crochet, plait, interlace, intertwine, interlock, link or unite the fibre in other ways, preferable the fabric is woven or knitted.

14. The medical device according to any of the preceding claims, wherein the UHMWPE fibres in the fabric are crossing each other in intersects which are positioned in angles of 1 to 179 degree, such as in angles of 80 to 100 degree, preferable in angles of about 90 degree.

15. The medical device according to any of the claims 10-14, wherein the first, second and third polymeric components are of medical grade.

16. The medical device according to claim 15, wherein the fabric has a high tensile strength and a high wear resistance.

17. The medical device according to claim 16, wherein the tensile strength of a fibre or strand of the fabric is above1.0 GPa, such as above 1.2 Gpa, preferable above 1.4 Gpa, more preferable above 1.6 Gpa, further preferable above 1.8 Gpa, yet further preferable above 1.9 Gpa, most preferable above 2.0 Gpa,

18. The medical device according to any of the preceding claims, wherein the polymers of the second polymeric component are short chain polymeric material which may be branched.

19. The medical device according to any of the claims 10-18, wherein the film is between 0.001 and 5 mm thick, such as between 0.01 and 5 mm, preferable between 0.1 and 4 mm, more preferable between 0.2 and 3 mm, further preferable between 0.3 and 2 mm, yet further preferable between 0.4 and 1.5 mm, most preferable between 0.5 and 1 mm.

20. The medical device according to any of the preceding claims, wherein the middle layer may be a core, a film or an inlay.

21. The medical device according to any of the claims 20, wherein the core is between 0.1 and 30 mm thick, such as between 0.2 and 25 mm, preferable between 0.3 and 21 mm, more preferable between 0.4 and 17 mm, further preferable between 0.5 and 13 mm, yet further preferable between 0.6 and 10 mm, most preferable between 0.7 and 7 mm.

22. The medical device according to any of the preceding claims, wherein the polymer layers are connected by heating to a temperature between 80 and 250 degree Celsius, such as between 90 and 240 degree Celsius, preferable between 100 and 230 degree Celsius, more preferable between 110 and 220

degree Celsius, further preferable between 120 and 210 degree Celsius, yet further preferable between 130 and 200 degree Celsius, most preferable between 140 and 190 degree Celsius.

23. The medical device according to claim 22, wherein the polymer layers in the connecting process further are subjected to vacuum, such as a vacuum below 500 mbar, preferable below 300 mbar, more preferable below 100 mbar, further preferable below 50 mbar, yet further preferable below 10 mbar, most preferable below 1 mbar.

24. The medical device according to any of the claims 22-23, wherein when heated the polymers of the core or the film or the inlay penetrate into the UHMWPE fibres of the fabrics, and hereby mechanically connect the polymer layers to each other.

25. The medical device according to any of the claims 22-24, wherein the temperature is selected to a level where the fibre of the fabrics are not melted.

26. The medical device according to any of the claims 22-25, wherein the temperature is selected to a level where the main part of the fabrics is not melted, but a thin layer constituting a low number of fibres of the outer part of the outermost fabrics of the polymeric product is melted.

27. The medical device according to any of the preceding claims, wherein the constitution of the polymeric product is: fabric – film – fabric.

28. The medical device according to any of the preceding claims, wherein the constitution of the polymeric product is: fabric – core – fabric.

29. The medical device according to claim 28, wherein one further layer of film and fabric are positioned at each side of the mentioned polymeric product, hereby the constitution of the polymeric product become: fabric – film – fabric – core – fabric – film – fabric.

30. The medical device according to claim 29, wherein one further layer of film and fabric are positioned at each side of the mentioned polymeric product, hereby the constitution of the polymeric product become: fabric – film – fabric – film – fabric – core – fabric – film – fabric – film – fabric.

31. The medical device according to claim 30, wherein one further layer of film and fabric are positioned at each side of the mentioned polymeric product, hereby the constitution of the polymeric product become: fabric – film – fabric – film – fabric – film – fabric – core – fabric – film – fabric – film – fabric – film – fabric.

32. The medical device according to claim 31, wherein one further layer of film and fabric are positioned at each side of the mentioned polymeric product, hereby the constitution of the polymeric product become: fabric – film – fabric – film – fabric – film – fabric – film – fabric – core – fabric – film – fabric – film – fabric – film – fabric – film – fabric.

33. The medical device according to any of claim 20-26, wherein the constitution of the polymeric product is: fabric – film – fabric – inlay – fabric – film – fabric.

34. The medical device according to any of the claims 26-33 wherein a number of film and fabric are positioned at one or both sides of the mentioned polymeric product in a way where film and fabric alternate in the polymeric product.

35. The medical device according to any of the claims 10-26 or 34 wherein the number of fabric and film in said upper layer and in said lower layer is not equal.

36. The medical device according to any of the claims 20-26 or 35, wherein the number of core, film, inlay and fabrics is varied in different areas of the polymeric product.

37. The medical device according to any of the claims 15-26 or 34-36, wherein the number of fabric is between 1 and 100, such as between 2 and 50, for example between 2 and 40, preferable between 2 and 35, more preferable between 2 and 30, further preferable between 2 and 25, yet further preferable between 2 and 20, most preferable between 2 and 10.

38. The medical device according to any of the claims 20-26 or 34-37, wherein the number of film is between 0 and 100, such as between 1 and 50, for example between 1 and 40, preferable between 1 and 35, more preferable between 1 and 30, further preferable between 1 and 25, yet further preferable between 1 and 20, most preferable between 1 and 10.

39. The medical device according to any of the claims 20-26 or 34-38, wherein the number of core is between 0 and 100, such as between 1 and 50, for example between 1 and 40, preferable between 1 and 35, more preferable between 1 and 30, further preferable between 1 and 25, yet further preferable between 1 and 20, most preferable between 1 and 10.

40. The medical device according to any of the claims 20-26 or 34-39, wherein the number of inlays is between 0 and 50, such as between 1 and 40, for example between 1 and 30, preferable between 1 and 25, more preferable between 1 and 20, further preferable between 1 and 15, yet further preferable between 1 and 10, most preferable between 1 and 5.

41. The medical device according to any of the claims 20-26 or 34-40, wherein the polymeric layers in areas or in the entire of some layers has a constitution where film and core or film and inlay are placed towards each other.

42. The medical device according to any of the preceding claims, wherein the shape of the device is any shape which can be formed by pressing into a mould, said shape can constitute a surface which may be but is not limited to flat, curved, waved, undulated, bent, bowed, crooked, while the overall shape of the device may be but is not limited to circular, oval, squared, rectangle, cubed, bowl, cup, crown, cap, basin, preferred shape is cup or hemispherical.

43. The medical device according to any of the preceding claims, wherein to the polymeric material is attached to a component, said component being polymeric or non-polymeric.

44. The medical device according to any of the preceding claims, wherein the device is supplied with one or more apertures, holes, gaps, perforations or hollows.

45. The medical device according to any of the preceding claims, wherein the polymeric product is adapted to be used as a medical device of the body of a mammal, such as a medical device or a prosthesis of the body of a human.

46. The medical device according to any of the preceding claims, wherein the polymeric product is adapted not to interfere with intra-articular components when the device is in the body of a human.

47. The medical device according to any of the preceding claims, wherein said device is utilised to support, bear, carry, replace or displace any constitution within the human body, which comprises high shape stability and good wear resistance.

48. The medical device according to any of the preceding claims, wherein the device completely or substantially completely surrounds an intra-articular component.

49. The medical device according to any of the preceding claims, wherein the device is a hip endoprosthesis.

50. The medical device according to any of the preceding claims, wherein the polymeric product constitutes the surface of a prosthetic device.

51. The medical device according to any of the preceding claims, wherein the device is a cartilage substitute.

52. The medical device according to any of the preceding claims, wherein the device is a breast prosthesis.

53. The medical device according to any of the preceding claims, wherein the device is a stent.

54. The medical device according to any of the preceding claims, wherein the device is a catheter.

55. The medical device according to any of the preceding claims, wherein the device is a heart valve.

56. A method for producing a bio-compatible medical device of a polymeric product, said method comprising
    - obtaining a number of at least three polymer layers, comprising
        - at least one upper layer of a first polymeric component,
        - a middle layer of a second polymeric component, and
        - at least one lower layer of a third polymeric component,

      wherein the chain length of the first polymeric component and the third polymeric component is longer than the chain length of the second polymeric component, and
    - positioning said polymer layers in a sandwich composition, and
    - shaping the sandwich composition of polymer layers by heating said composition followed by pressing it into a mould, where the heating and pressing processes are conducted in vacuum, and
    - providing the polymeric product in a desired shape.

57. The method according to claim 56, wherein the at least three polymer layers constitute a core or a film or an inlay with at least one layer of fabric on each side.

58. The method according to claim 57, wherein the core and film and inlay differs in constitution from the fabrics.

59. The method according to any of the claims 57-58, wherein different layers of fabrics have equal constitutions.

60. The method according to any of the claims 57-59, wherein the at least one layer of a first polymeric component or a third polymeric component on each side of the medical device each constitute two or more layers of fabrics, and said two or

more layers of fabrics have a film of a polymer layer or an polymeric inlay in between each fabric.

61. The method according to any of the claims 57-60, wherein the core and the film and the inlay have been constructed by similar polymeric material.

62. The method according to any of the claims 56-61, wherein the polymer layers are composed of a polymer selected from polyacrylates, polystyrene, polyethers, polytetrafluorethylene, polyvinylalcohol, polyethylene, polypropylene, polyethylene oxides and polyvinylpyrrolidon

63. The method according to any of the claims 56-62, wherein the polymer layers are composed of a polymer selected among polyethylene (PE), polypropylene (PP) and polyvinylpyrrolidone (PVP).

64. The method according to any of the claims 56-63, wherein the polymer layers are composed of polyethylene (PE).

65. The method according to any of the claims 56-64, wherein the structure of the fabrics are composed of long polymer fibre, and the core and/or film and/or inlay are composed of short chain polymer material.

66. The method according to any of the claims 56-65, wherein the first and third polymeric component comprises long polymer fibre which are ultra high molecule weight polyethylene (UHMWPE) fibre.

67. The method according to any of the claims 56-66, wherein the fabric is woven into a shape suitable for the shape of the polymeric product.

68. The method according to any of the claims 56-67, wherein the UHMWPE fibres of the fabric in the intersects are positioned in angles of 1 to 179 degree, such as in angles of 80 to 100 degree, such as in angles of about 90 degree.

69. The method according to any of the claims 57-68, wherein the fabric has high tensile strength and high wear resistance.

70. The method according to any of the claims 56-69, wherein the second polymeric component comprises short chain polymer material which are branched.

71. The method according to any of the claims 57-70, wherein the film is between 0.001 and 5 mm thick, such as between 0.01 and 5 mm, preferable between 0.1 and 4 mm, more preferable between 0.2 and 3 mm, further preferable between 0.3 and 2 mm, yet further preferable between 0.4 and 1.5 mm, most preferable between 0.5 and 1 mm.

72. The method according to any of the claims 57-71, wherein the core is between 0.1 and 30 mm thick, such as between 0.2 and 25 mm, preferable between 0.3 and 21 mm, more preferable between 0.4 and 17 mm, further preferable between 0.5 and 13 mm, yet further preferable between 0.6 and 10 mm, most preferable between 0.7 and 7 mm.

73. The method according to any of the claims 57-72, wherein the core or the inlay absorbs shocks, pushes and strokes.

74. The method according to any of the claims 56-73, wherein the heating is of a temperature between 80 and 250 degree Celsius, such as between 90 and 240 degree Celsius, preferable between 100 and 230 degree Celsius, more preferable between 110 and 220 degree Celsius, further preferable between 120 and 210 degree Celsius, yet further preferable between 130 and 200 degree Celsius, most preferable between 140 and 190 degree Celsius.

75. The method according to any of the claims 56-74, wherein the vacuum is below 800 mbar, such as a vacuum below 500 mbar, preferable below 300 mbar, more preferable below 100 mbar, further preferable below 50 mbar, yet further preferable below 10 mbar, most preferable below 1 mbar.

76. The method according to any of the claims 56-75, wherein the shaped product is treated by radiation, to further cross binding the polymers and thereby improving the strength of the product, said radiation may be but is not limited to high-energy electrons, gamma rays, photons, microwaves.

77. The method according to any of the claims 56-76, wherein the shaped product is further subjected to annealing to ensure all linking has appeared.

78. The method according to claim 77, wherein the annealed polymeric product is subjected to surface coating, where the product is coated by polyvinylpyrrolidone (PVP) by plasma polymerisation.

79. The method according to claim 78, wherein the surface coated polymeric product is sterilised by radiation or by heating, where the radiation can be but is not limited to high-energy electrons, gamma rays, photons, microwaves.

80. The method according to claim 75, wherein the shaped polymeric product is subjected to surface coating, where the product is coated by polyvinylpyrrolidone (PVP) by plasma polymerisation.

81. The method according to claim 80, wherein the surface coated polymeric product is crosslinked and sterilised simultaneously by treating with ionizing radiation or by heating.

82. The method according to any of the claims 78-81, wherein the surface coating has a thickness of 1 to 700 nm, such as between 10 and 500 nm, preferable between 20 and 400 nm, more preferable between 30 and 300 nm, further preferable between 40 and 200 nm, yet further preferable between 50 and 100 nm, most preferable between 60 and 90 nm.

83. The method according to any of the claims 56-82, wherein the layered structure of the product is in accordance to the product described in claim 26 to 30.

84. The method according to any of the claims 56-83, wherein the shape and size of the polymeric product can be any possible to produce by pressing into to a mould, said mould forming a polymeric product which can be flat or round or in between and where the three-dimensional shape can be any possible forming by pressing into a mould.

85. The method according to any of the claims 56-84, wherein the thickness of the polymeric product is between 0.001 and 40 cm thick, such as between 0.005 and 30 cm, preferable between 0.01 and 20 cm, more preferable between 0.02 and 10 cm, further preferable between 0.03 and 8 cm, yet further preferable between 0.04 and 5 cm, most preferable between 0.05 and 2 cm

86. An artificial cartilage product comprising a bio-compatible polymeric product with a layered structure, as defined in any of claims 1-48.

87. A prosthetic device comprising a bio-compatible polymeric product with a layered structure as defined in any of claims 1-48.

88. A hip endoprosthesis comprising a bio-compatible polymeric product with a layered structure as defined in any of claims 1-48.

89. A surface of a prosthetic device comprising a bio-compatible polymeric product with a layered structure as defined in any of claims 1-48.

90. A breast prosthesis comprising a bio-compatible polymeric product with a layered structure as defined in any of claims 1-48.

91. A stent comprising a bio-compatible polymeric product with a layered structure as defined in any of claims 1-48.

92. A catheter comprising a bio-compatible polymeric product with a layered structure as defined in any of claims 1-48.

93. A heart valve comprising a bio-compatible polymeric product with a layered structure as defined in any of claims 1-48.

94. Use of a bio-compatible polymeric product as defined in any of claim 1-48 for production of a medical device.

95. Use of a bio-compatible polymeric product as defined in any of claim 1-48 for production of a cartilage substitute.

96. Use of a bio-compatible polymeric product as defined in any of claim 1-48 for production of a prosthesis.

97. Use of a bio-compatible polymeric product as defined in any of claim 1-48 for production of a hip endoprosthesis.

98. Use of a bio-compatible polymeric product as defined in any of claim 1-48 for production of a breast prosthesis.

99. Use of a bio-compatible polymeric product as defined in any of claim 1-48 for production of a stent.

100. Use of a bio-compatible polymeric product as defined in any of claim 1-48 for production of a catheter.

101. Use of a bio-compatible polymeric product as defined in any of claim 1-48 for production of a heart valve.

Fig. 1

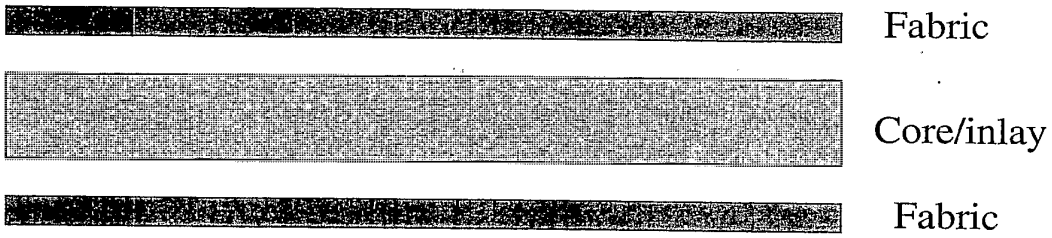

Fig. 2

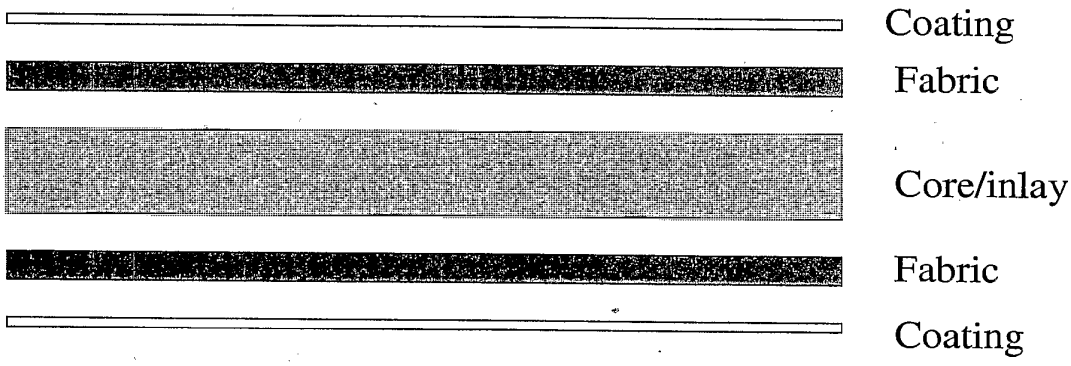

Fig. 3

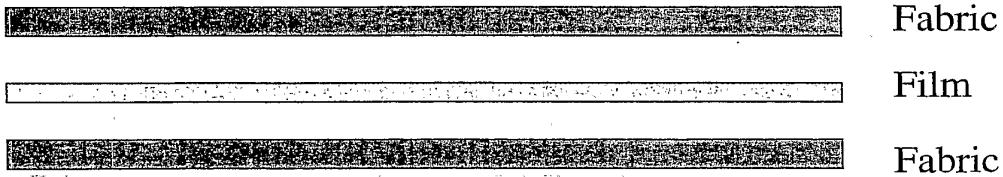

Fig. 4

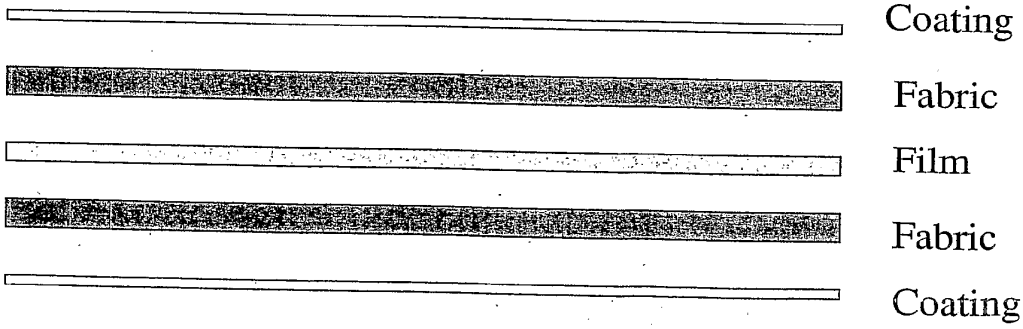

Fig. 5

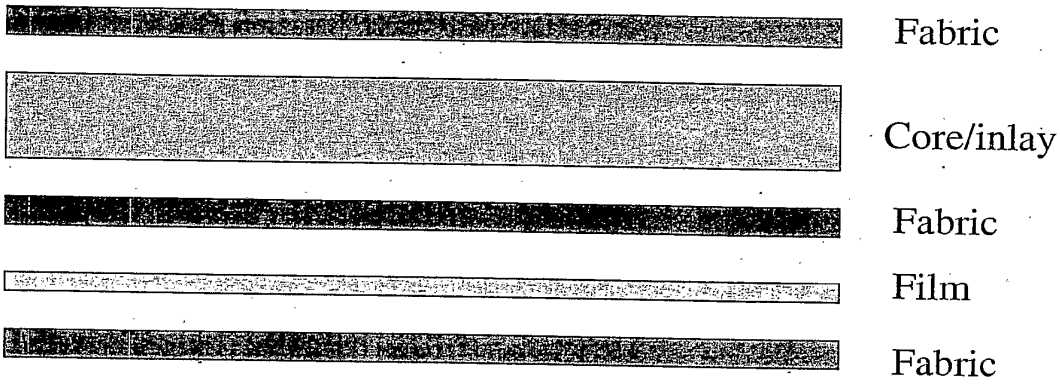

Fig. 6

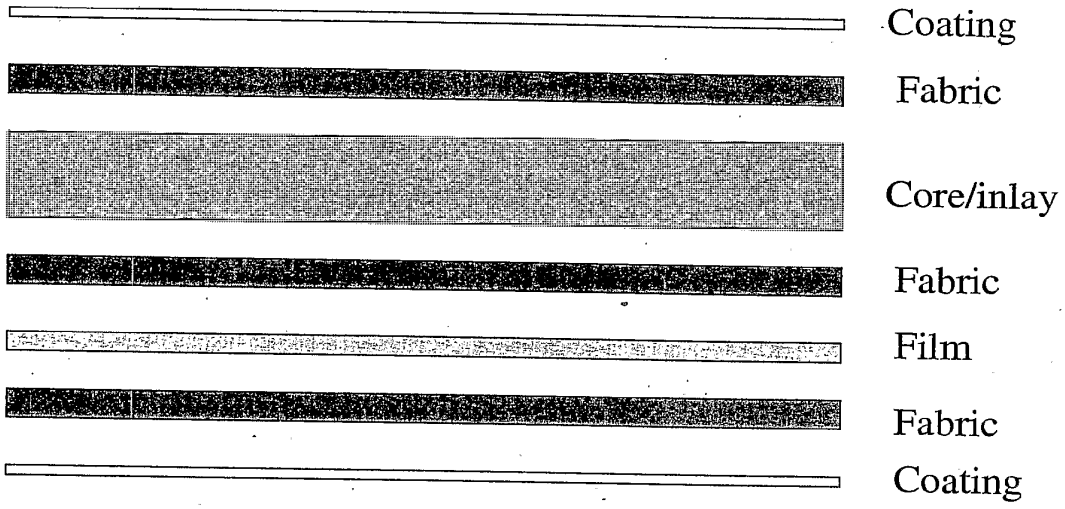

Fig. 7

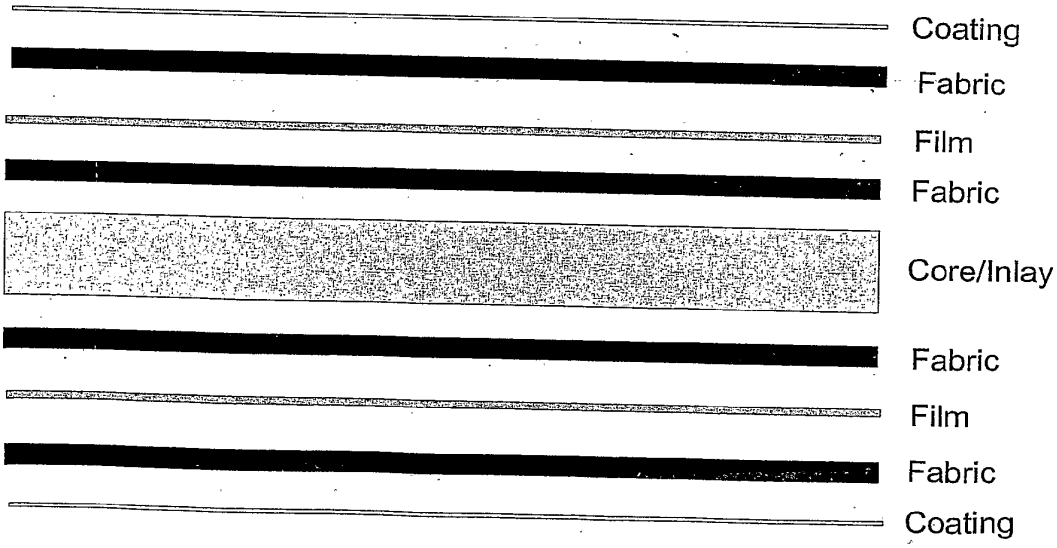

Fig. 8

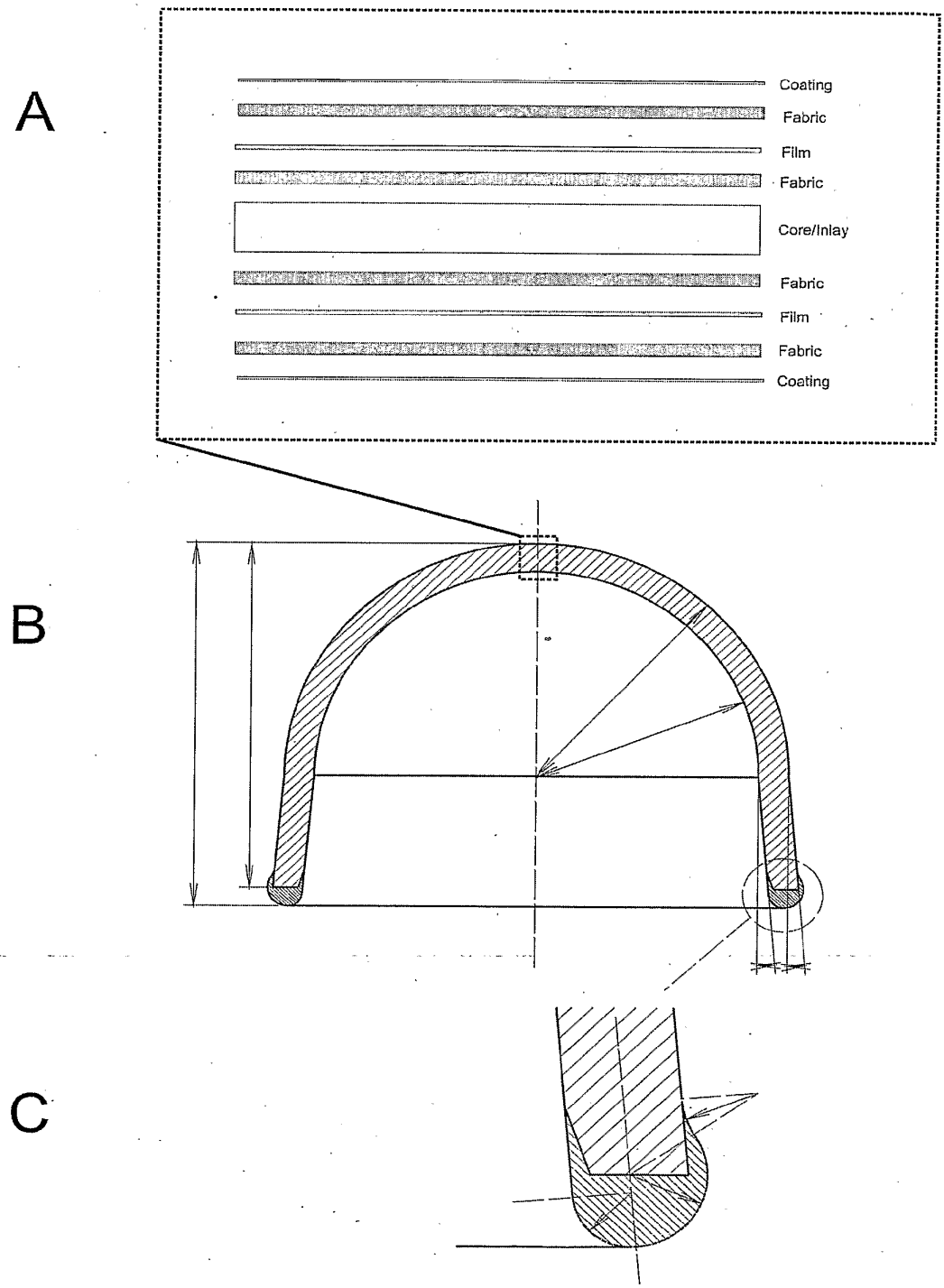
A
Coating
Fabric
Film
Fabric
Core/Inlay
Fabric
Film
Fabric
Coating
B
C

Fig. 9A Production survey, flowchart

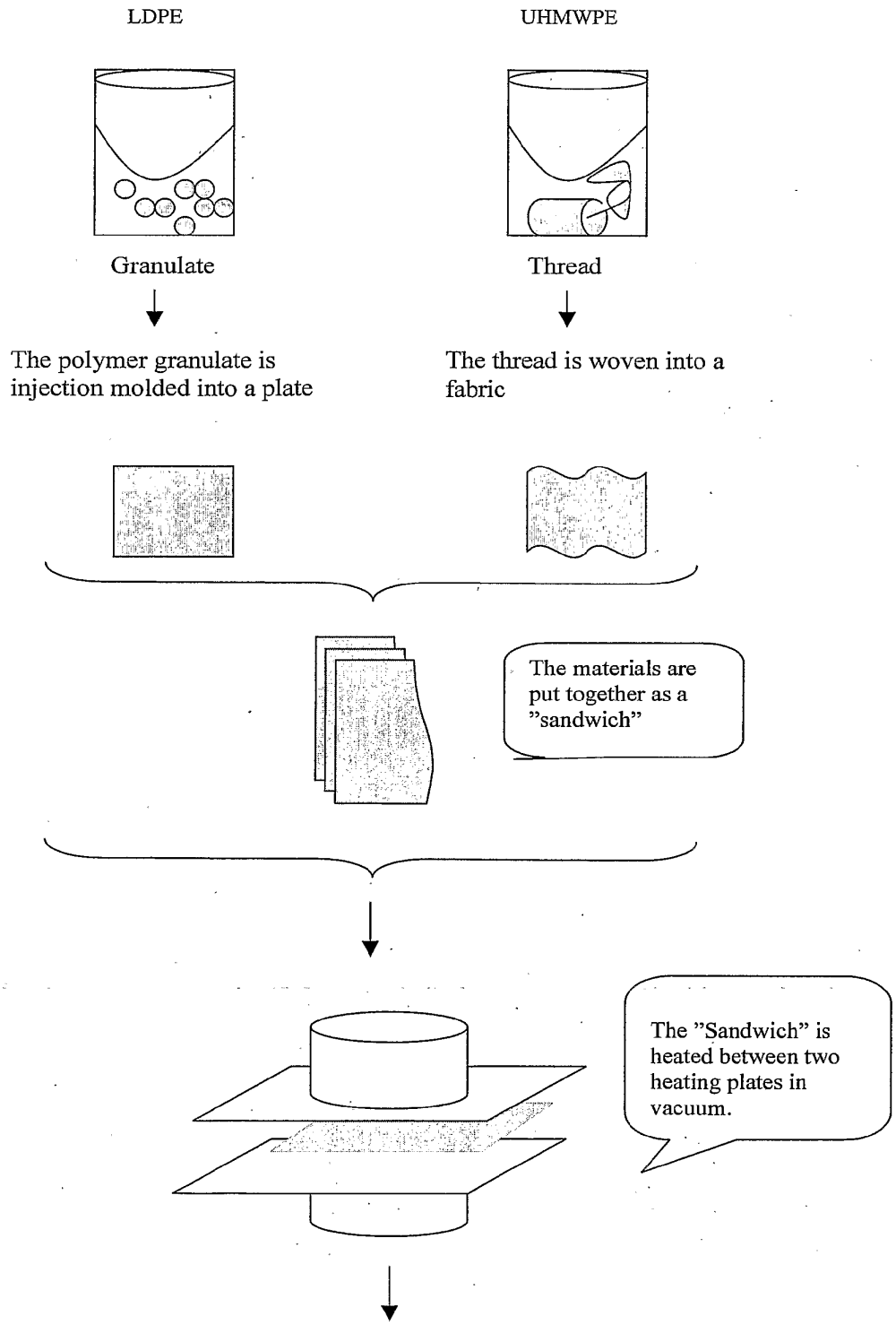

Fig. 9B

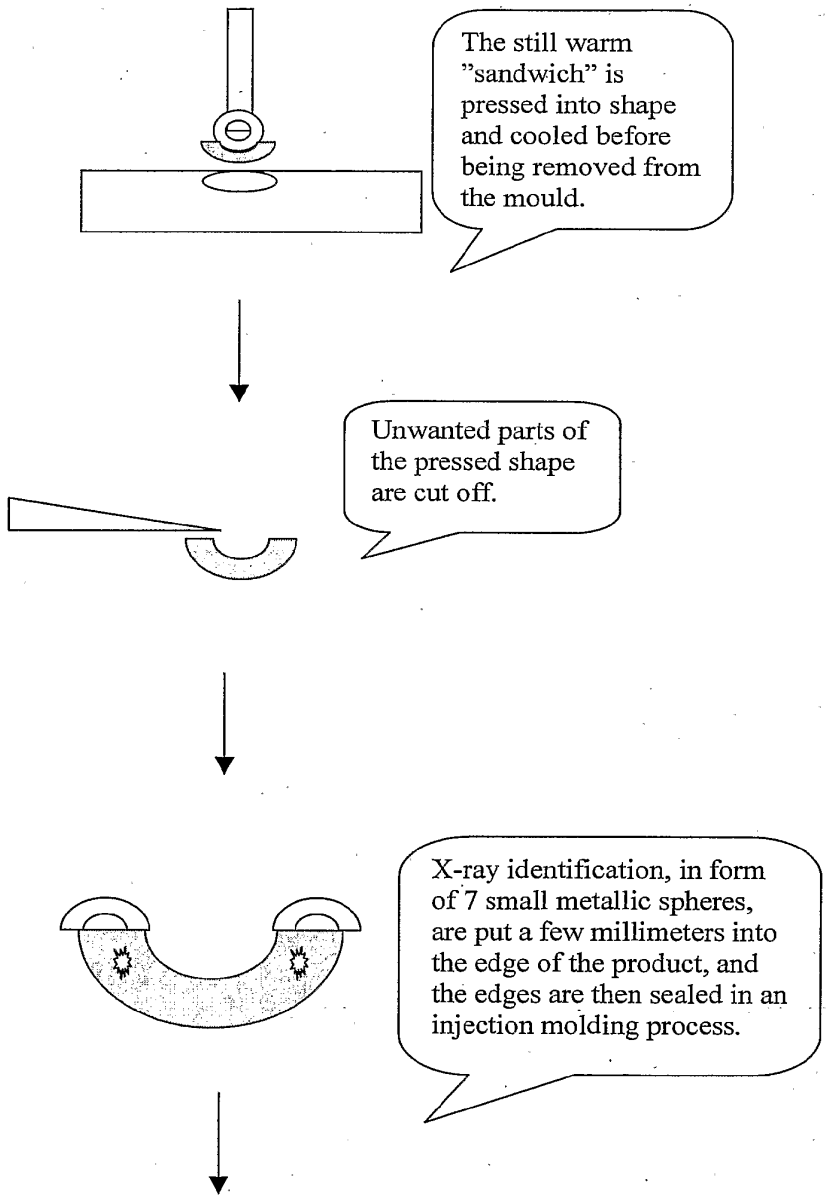
The still warm "sandwich" is pressed into shape and cooled before being removed from the mould.
Unwanted parts of the pressed shape are cut off.
X-ray identification, in form of 7 small metallic spheres, are put a few millimeters into the edge of the product, and the edges are then sealed in an injection molding process.

Fig. 9C

6/8

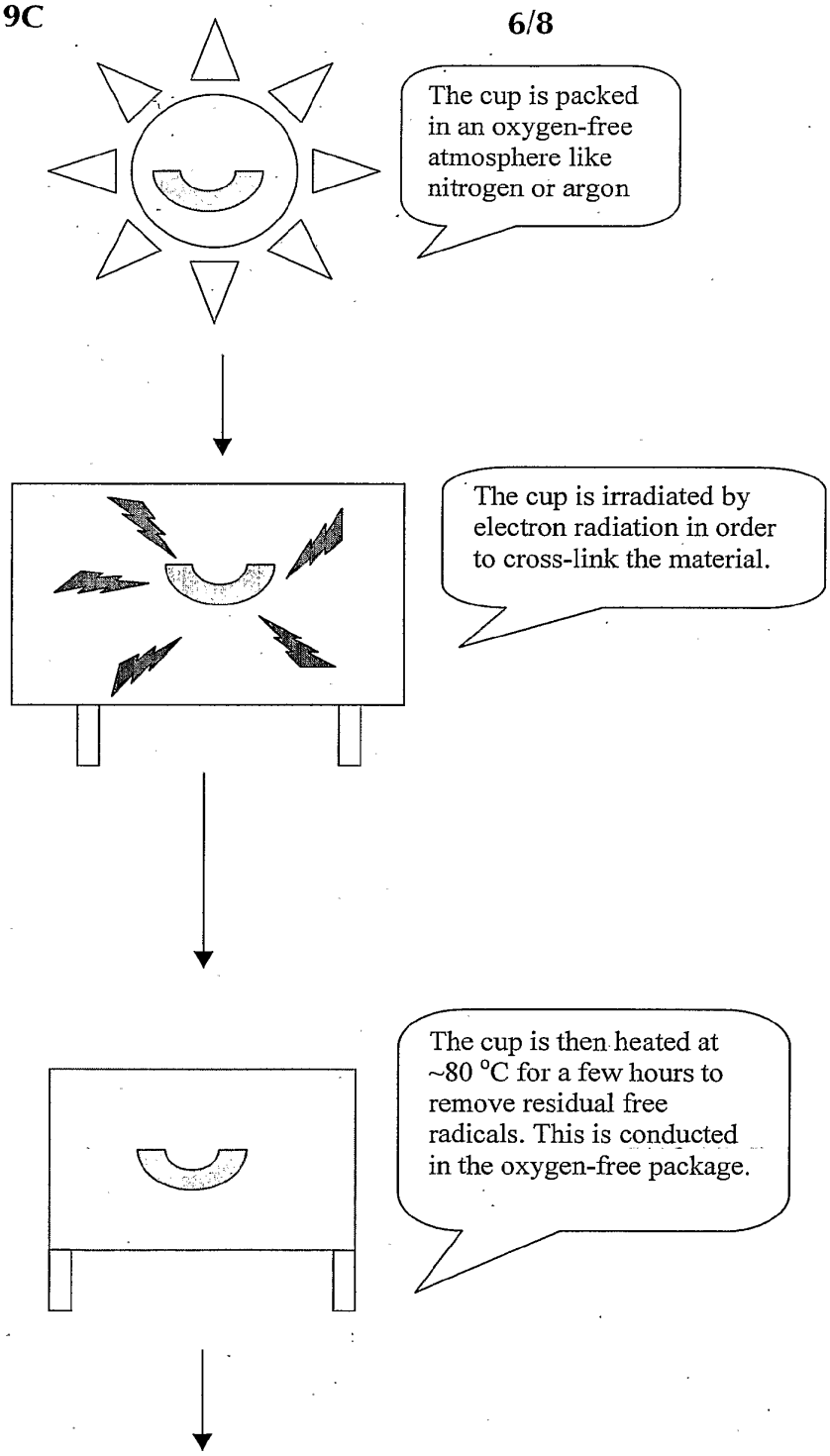
The cup is packed in an oxygen-free atmosphere like nitrogen or argon
The cup is irradiated by electron radiation in order to cross-link the material.
The cup is then heated at ~80 °C for a few hours to remove residual free radicals. This is conducted in the oxygen-free package.

Fig. 9D

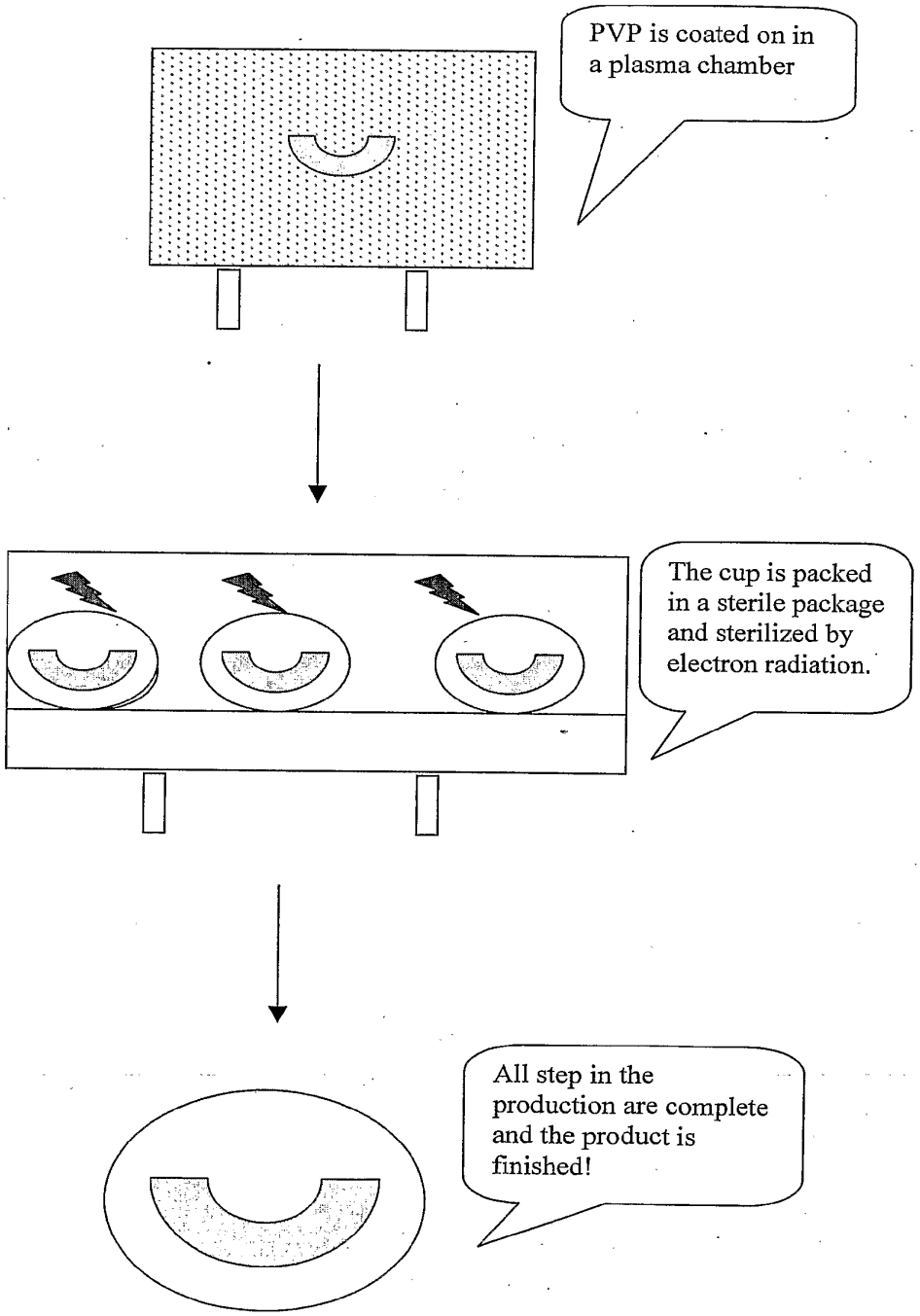
PVP is coated on in a plasma chamber
The cup is packed in a sterile package and sterilized by electron radiation.
All step in the production are complete and the product is finished!

Fig. 10

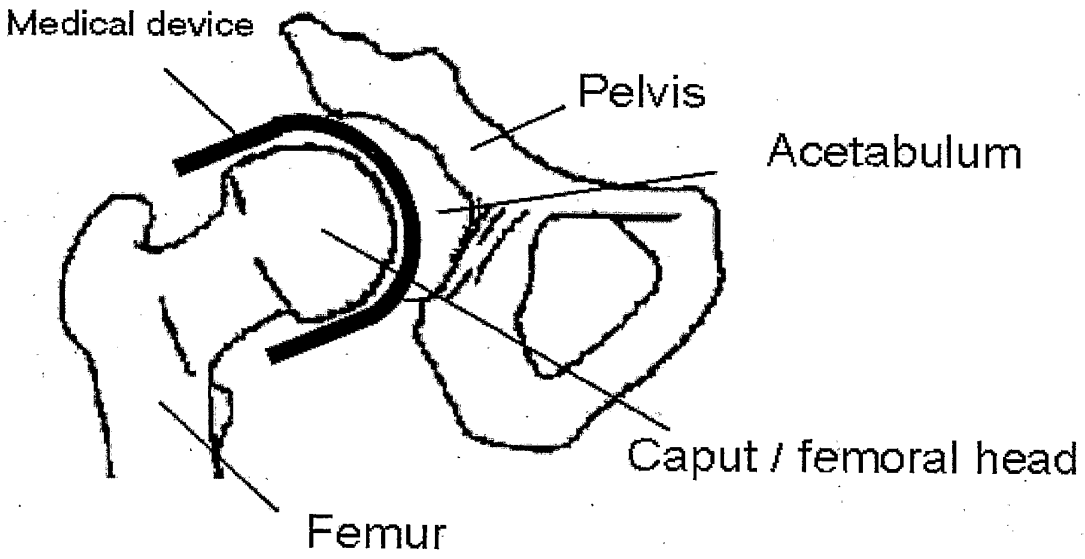
Medical device
Pelvis
Acetabulum
Caput / femoral head
Femur

INTERNATIONAL SEARCH REPORT

International Application No
PCT/DK 03/00686

A. CLASSIFICATION OF SUBJECT MATTER
IPC 7 A61L27/44 A61L27/14 A61F2/02 B32B27/32

According to International Patent Classification (IPC) or to both national classification and IPC

B. FIELDS SEARCHED

Minimum documentation searched (classification system followed by classification symbols)
IPC 7 A61L A61F B32B B29C

Documentation searched other than minimum documentation to the extent that such documents are included in the fields searched

Electronic data base consulted during the international search (name of data base and, where practical, search terms used)

EPO-Internal, WPI Data, PAJ

C. DOCUMENTS CONSIDERED TO BE RELEVANT

Category °	Citation of document, with indication, where appropriate, of the relevant passages	Relevant to claim No.
X	WO 01 45595 A (LAURITZEN JES BRUUN ;PEDERSEN WALTHER BATSBERG (DK); STEENSTRUP FR) 28 June 2001 (2001-06-28) page 10, line 12 - line 28 page 15 -page 21 page 22, line 1 - line 9 example 1 claims 1,2,4-14,20-23,28 ---	1-101
X	WO 01 64278 A (SCIMED LIFE SYSTEMS INC) 7 September 2001 (2001-09-07) page 2, line 17 - line 23	1,3-6
A	page 2, line 29 -page 3, line 6 page 4, line 14 - line 20 page 6, line 32 -page 7, line 6 page 8, line 26 - line 30; example 1 claims 1,2,4 --- -/--	2,7-85

[X] Further documents are listed in the continuation of box C.

[X] Patent family members are listed in annex.

° Special categories of cited documents :

"A" document defining the general state of the art which is not considered to be of particular relevance
"E" earlier document but published on or after the international filing date
"L" document which may throw doubts on priority claim(s) or which is cited to establish the publication date of another citation or other special reason (as specified)
"O" document referring to an oral disclosure, use, exhibition or other means
"P" document published prior to the international filing date but later than the priority date claimed

"T" later document published after the international filing date or priority date and not in conflict with the application but cited to understand the principle or theory underlying the invention
"X" document of particular relevance; the claimed invention cannot be considered novel or cannot be considered to involve an inventive step when the document is taken alone
"Y" document of particular relevance; the claimed invention cannot be considered to involve an inventive step when the document is combined with one or more other such documents, such combination being obvious to a person skilled in the art.
"&" document member of the same patent family

Date of the actual completion of the international search	Date of mailing of the international search report
23 January 2004	15 MAART 2004

Name and mailing address of the ISA	Authorized officer
European Patent Office, P.B. 5818 Patentlaan 2 NL - 2280 HV Rijswijk Tel. (+31-70) 340-2040, Tx. 31 651 epo nl, Fax: (+31-70) 340-3016	JOHANNA BROLUND /EÖ

Form PCT/ISA/210 (second sheet) (July 1992)

INTERNATIONAL SEARCH REPORT

Internati .pplication No
PCT/DK 03/00686

C.(Continuation) DOCUMENTS CONSIDERED TO BE RELEVANT

Category °	Citation of document, with indication, where appropriate, of the relevant passages	Relevant to claim No.
A	EP 0 392 734 A (ICI PLC) 17 October 1990 (1990-10-17) page 2 -page 3; claims 1,5-12 ---	1-101
A	US 6 165 220 A (SHEN FU-WEN ET AL) 26 December 2000 (2000-12-26) column 1 -column 2 column 4 -column 6 ---	76,77, 79,81
P,A	US 2003/055506 A1 (KOZLOVA ZDENA ET AL) 20 March 2003 (2003-03-20) the whole description claims 1-7,10 ---	1-101
A	EP 0 457 952 A (ZACHARIADES ANAGNOSTIS E) 27 November 1991 (1991-11-27) abstract; claims 1-8,19-25 -----	1-101

Form PCT/ISA/210 (continuation of second sheet) (July 1992)

INTERNATIONAL SEARCH REPORT

Information on patent family members

Internati pplication No
PCT/DK 03/00686

Patent document cited in search report		Publication date	Patent family member(s)			Publication date
WO 0145595	A	28-06-2001	AU	1996401	A	03-07-2001
			BG	106862	A	28-02-2003
			BR	0016474	A	20-08-2002
			CA	2392782	A1	28-06-2001
			CN	1433289	T	30-07-2003
			CZ	20021966	A3	12-03-2003
			WO	0145595	A2	28-06-2001
			EE	200200329	A	15-10-2003
			EP	1242008	A2	25-09-2002
			JP	2003517875	T	03-06-2003
			NO	20022905	A	12-08-2002
			SK	8232002	A3	02-05-2003
			US	2003093152	A1	15-05-2003
WO 0164278	A	07-09-2001	AU	4320101	A	12-09-2001
			CA	2401400	A1	07-09-2001
			EP	1263492	A1	11-12-2002
			JP	2003525092	T	26-08-2003
			WO	0164278	A1	07-09-2001
EP 0392734	A	17-10-1990	EP	0392734	A1	17-10-1990
			US	5222987	A	29-06-1993
US 6165220	A	26-12-2000	AU	742681	B2	10-01-2002
			AU	3562499	A	01-11-1999
			AU	4986497	A	11-05-1998
			EP	1028760	A1	23-08-2000
			EP	1071383	A1	31-01-2001
			JP	2002511307	T	16-04-2002
			WO	9816258	A1	23-04-1998
			WO	9952474	A1	21-10-1999
			US	6494917	B1	17-12-2002
US 2003055506	A1	20-03-2003	US	6264695	B1	24-07-2001
			AU	7843200	A	30-04-2001
			CA	2388794	A1	05-04-2001
			CZ	20021137	A3	11-09-2002
			EP	1231868	A2	21-08-2002
			JP	2003510129	T	18-03-2003
			WO	0122902	A2	05-04-2001
EP 0457952	A	27-11-1991	US	4944974	A	31-07-1990
			EP	0457952	A1	27-11-1991

Form PCT/ISA/210 (patent family annex) (July 1992)

(12) INTERNATIONAL APPLICATION PUBLISHED UNDER THE PATENT COOPERATION TREATY (PCT)

(19) World Intellectual Property Organization
International Bureau

(43) International Publication Date
12 July 2001 (12.07.2001)

PCT

(10) International Publication Number
WO 01/49213 A2

(51) International Patent Classification[7]: A61F 2/06

(21) International Application Number: PCT/US00/34591

(22) International Filing Date:
18 December 2000 (18.12.2000)

(25) Filing Language: English

(26) Publication Language: English

(30) Priority Data:
09/477,120 31 December 1999 (31.12.1999) US

(71) Applicant *(for all designated States except US)*: **ADVANCED BIO PROSTHETIC SURFACES, LTD.** [US/US]; 4778 Research Drive, San Antonio, TX 78240 (US).

(72) Inventors; and
(75) Inventors/Applicants *(for US only)*: **BAILEY, Steven, R.** [US/US]; 3 Knoll, San Antonio, TX 78232 (US). **BOYLE, Christopher, T.** [US/US]; 5100 USSA Boulevard #1624, San Antonio, TX 78240 (US).

(74) Agent: **ROSENBAUM, David, G.**; Rosenbaum & Associates, P.C., 875 North Michigan Avenue, Suite #3653, Chicago, IL 60611 (US).

(81) Designated States *(national)*: AE, AG, AL, AM, AT, AU, AZ, BA, BB, BG, BR, BY, BZ, CA, CH, CN, CR, CU, CZ, DE, DK, DM, DZ, EE, ES, FI, GB, GD, GE, GH, GM, HR, HU, ID, IL, IN, IS, JP, KE, KG, KP, KR, KZ, LC, LK, LR, LS, LT, LU, LV, MA, MD, MG, MK, MN, MW, MX, MZ, NO, NZ, PL, PT, RO, RU, SD, SE, SG, SI, SK, SL, TJ, TM, TR, TT, TZ, UA, UG, US, UZ, VN, YU, ZA, ZW.

(84) Designated States *(regional)*: ARIPO patent (GH, GM, KE, LS, MW, MZ, SD, SL, SZ, TZ, UG, ZW), Eurasian patent (AM, AZ, BY, KG, KZ, MD, RU, TJ, TM), European patent (AT, BE, CH, CY, DE, DK, ES, FI, FR, GB, GR, IE, IT, LU, MC, NL, PT, SE, TR), OAPI patent (BF, BJ, CF, CG, CI, CM, GA, GN, GW, ML, MR, NE, SN, TD, TG).

Published:
— *Without international search report and to be republished upon receipt of that report.*

For two-letter codes and other abbreviations, refer to the "Guidance Notes on Codes and Abbreviations" appearing at the beginning of each regular issue of the PCT Gazette.

(54) Title: ENDOLUMINAL CARDIAC AND VENOUS VALVE PROSTHESES AND METHODS OF MANUFACTURE AND DELIVERY THEREOF

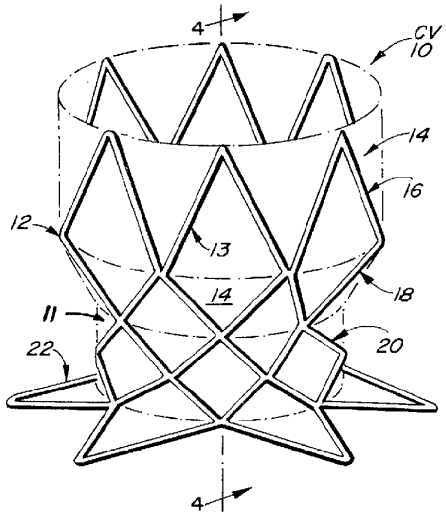

(57) Abstract: This invention relates to prosthetic cardiac and venous valves and a single catheter device and minimally invasive techniques for percutaneous and transluminal valvuloplasty and prosthetic valve implantation.

WO 01/49213 A2

ENDOLUMINAL CARDIAC AND VENOUS VALVE PROSTHESES AND METHODS OF MANUFACTURE AND DELIVERY THEREOF

Cross-Reference to Related Application

This application corresponds to and claims priority of pending U.S. utility patent application, Serial No. 09/477,120, filed December 31, 1999.

Background of the Invention

The present invention relates generally to implantable prosthetic cardiac and venous valves. More particularly, the present invention pertains to prosthetic cardiac and venous valve implants which are capable of being delivered using endovascular techniques and being implanted at an intracardiac or intravenous site without the need for anatomic valve removal. The prosthetic valves of the present invention are well-suited for cardiac delivery via a femoral or subclavian artery approach using a delivery catheter, and, depending upon the specific configuration selected, may be deployed within the heart to repair valve defects or disease or septal defects or disease. According to one embodiment of the invention, there is provided a chamber-to-vessel (CV) configuration which is particularly well-suited as an aortic valve prosthesis to facilitate blood flow from the left ventricle to the aorta. In a second embodiment, there is provided a prosthetic valve in a chamber-to-chamber (CC) configuration which is particularly well-adapted for mitral valve replacement or repair of septal defects. Finally, a third embodiment is provided in a vessel-to-vessel (VV) configuration, which is well suited for venous valve exclusion and replacement.

Common to each of the CV, CC and VV embodiments of the present invention are a stent support member, a graft member which covers at least a portion of either or both the lumenal and ablumenal surfaces of the stent, valve flaps which are formed either by biological xenograft valves, synthetic valves formed from either the same material or a different material as the graft member, the valve flaps being coupled to the stent in a manner

which biases the valve flaps so they close upon a zero pressure differential across the valve region.

It is important for the present invention to provide orientational definitions. For purposes of the present invention, references to positional aspects of the present invention will be defined relative to the directional flow vector of blood flow through the implantable device. Thus, the term "proximal" is intended to mean on the inflow or upstream flow side of the device, while "distal" is intended to mean on the outflow or downstream flow side of the device. With respect to the catheter delivery system described herein, the term "proximal" is intended to mean toward the operator end of the catheter, while the term "distal" is intended to mean toward the terminal end or device-carrying end of the catheter.

Summary of Prior Art

The prior art discloses certain common device segments inherently required by a percutaneous prosthetic valve: an expandable stent segment, an anchoring segment and a flow-regulation segment.

Prior art percutaneous prosthetic valve devices include the Dobben valve, U.S. Pat. No. 4,994,077, the Vince valve, U.S. Pat. No. 5,163,953, the Teitelbaum valve, U.S. Pat. No. 5,332,402, the Stevens valve, U.S. Pat. No. 5,370,685, the Pavcnik valve, U.S. Pat. No. 5,397,351, the Taheri valve, U.S. Pat. No. 5,824,064, the Anderson valves, U.S. Pat. Nos. 5,411,552 & 5,840,081, the Jayaraman valve, U.S. Pat. No. 5,855,597, the Besseler valve, U.S. Pat. No. 5,855,601, the Khosravi valve, U.S. Pat. No. 5,925,063, the Zadano-Azizi valve, U.S. Pat. No. 5,954,766, and the Leonhardt valve, U.S. Pat. No. 5,957,949. Each of these pre-existing stent valve designs has certain disadvantages which are resolved by the present invention.

The Dobben valve has a disk shaped flap threaded on a wire bent like a safety pin to engage the vessel wall and anchor the valve. A second embodiment uses a stent of a cylindrical or crown shape that is made by bending wire into a zigzag shape to anchor the device and attach the flow regulator flap. The device presents significant hemodynamic, delivery, fatigue and stability disadvantages.

The Vince valve has a stent comprised of a toroidal body formed of a flexible coil of wire and a flow-regulation mechanism consisting of a flap of biologic material. Numerous longitudinal extensions within the stent are provided as attachment posts to mount the flow-regulation mechanism. The device requires balloon expansion to deliver to the body orifice. The main shortcoming of this design is delivery profile. Specifically, the device and method put forth will require a 20+ French size catheter (approximately 9 French sizes to accommodate the balloon and 14+ French sizes to accommodate the compressed device) making the device clinically ineffective as a minimally invasive technique. Additionally, the device does not adequately address hemodynamic, stability and anchoring concerns.

The Teitelbaum valve is made of shape memory nitinol and consists of two components. The first component is stent-like and comprised of a meshwork or braiding of nitinol wire similar to that described by Wallsten, U.S. Pat. No. 4,655,771, with trumpet like distal a proximal flares. The purpose of the stent is to maintain a semi-ridged patent channel through the diseased cardiac valve after initial balloon dilation. The flared ends are intended to maintain the position of the stent component across the valve thereby anchoring the device. Embodiments for the flow-regulation mechanism include a sliding obturator and a caged ball both which are delivered secondary to the stent portion. The disadvantages of the device are the flow regulators reduce the effective valve orifice and generate sub-optimal hemodynamic characteristics; fatigue concerns arise from the separate nature of the stent and flow-

regulation components; the high metal and exposed metal content raises thrombogenesis, valvular stenosis and chronic anticoagulation concerns; and the separate delivery requirements (although addressing the need for small delivery profile) in addition to any initial valvuloplasty performed increases the time, costs, risks, difficulty and trauma associated with the percutaneous procedure.

The Pavcnik valve is a self-expanding percutaneous device comprised of a poppet, a stent and a restraining element. The valve stent has barbed means to anchor to the internal passageway. The device includes a self-expanding stent of a zigzag configuration in conjunction with a cage mechanism comprised of a multiplicity of crisscrossed wires and a valve seat. The disadvantages of the device include large delivery profile, reduced effective valvular orifice, possible perivalvular leakage, trauma-inducing turbulent flow generated by the cage occlusive apparatus and valve seat, thrombogenesis, valvular stenosis, chronic anticoagulation, problematic physiological and procedural concerns due to the barb anchors and complex delivery procedure that includes inflation of occlusive member after initial implantation.

Stevens discloses a percutaneous valve replacement system for the endovascular removal of a malfunctioning valve followed by replacement with a prosthetic valve. The valve replacement system may include a prosthetic valve device comprised of a stent and cusps for flow-regulation such as a fixed porcine aortic valve, a valve introducer, an intraluminal procedure device, a procedure device capsule and a tissue cutter. The devices disclosed indicate a long and complex procedure requiring large diameter catheters. The valve device disclosed will require a large delivery catheter and does not address the key mechanisms required of a functioning valve. Additionally, the device requires intraluminal-securing means such as suturing to anchor the device at the desired location.

The Taheri valve describes an aortic valve replacement combined with an aortic arch graft. The devices and percutaneous methods described require puncture of the chest cavity.

Anderson has disclosed various balloon expandable percutaneous prosthetic valves. The latest discloses a valve prosthesis comprised of a stent made from an expandable cylindrical structure made of several spaced apices and an elastically collapsible valve mounted to the stent with the commissural points of the valve mounted to the apices. The device is placed at the desired location by balloon expanding the stent and valve. The main disadvantage to this design is the 20+ French size delivery requirement. Other problems include anchoring stability, perivalvular leakage, difficult manufacture and suspect valve performance.

The Jayaraman valve includes a star-shaped stent and a replacement valve and/or replacement graft for use in repairing a damaged cardiac valve. The device is comprised of a chain of interconnected star-shaped stent segments in the center of which sits a replacement valve. The flow-regulation mechanism consists of three flaps cut into a flat piece of graft material that is rolled to form a conduit in which the three flaps may be folded inwardly in an overlapping manner. An additional flow-regulation mechanism is disclosed in which a patch (or multiple patches) is sutured to the outside of a conduit which is then pulled inside out or inverted such that the patch(s) reside on the fully inverted conduit. A balloon catheter is required to assist expansion during delivery. The disadvantages of this design include lack of sufficient anchoring mechanism; problematic interference concerns with adjacent tissues and anatomical structures; fatigue concerns associated with the multiplicity of segments, connections and sutures; lack of an adequately controlled and biased flow-regulation mechanism; uncertain effective valve orifice, difficult manufacture; balloon dilation requirement; complex, difficult and inaccurate delivery and large delivery profile.

The Besseler valve discloses methods and devices for the endovascular removal of a defective heart valve and the replacement with a percutaneous cardiac valve. The device is comprised of a self-expanding stent member with a flexible valve disposed within. The stent member is of a self-expanding cylindrical shape made from a closed wire in formed in a zigzag configuration that can be a single piece, stamped or extruded or formed by welding the free ends together. The flow-regulation mechanism is comprised of an arcuate portion which contains a slit (or slits) to form leaflets and a cuff portion which is sutured to and encloses the stent. The preferred flow regulator is a porcine pericardium with three cusps. An additional flow regulator is described in which the graft material that comprises the leaflets (no additional mechanisms for flow-regulation) extends to form the outer cuff portion and is attached to the stent portion with sutures. The anchoring segment is provided by a plurality of barbs carried by the stent (and therefor penetrating the cuff-graft segment). Delivery requires endoluminal removal of the natural valve because the barb anchors will malfunction if they are orthotopically secured to the native leaflets instead of the more rigid tissue at the native annulus or vessel wall. Delivery involves a catheter within which the device and a pusher rod are disposed. The disadvantages of the device are lack of a well defined and biased flow-regulation mechanism, anatomic valve removal is required thereby lengthening the procedure time, increasing difficulty and reducing clinical practicality, trauma-inducing barbs as described above and the device is unstable and prone to migration if barbs are omitted.

The Khosravi valve discloses a percutaneous prosthetic valve comprised of a coiled sheet stent similar to that described by Derbyshire, U.S. Pat. No. 5,007,926, to which a plurality of flaps are mounted on the interior surface to form a flow-regulation mechanism that may be comprised of a biocompatible material. The disadvantages of this design include problematic interactions between the stent and flaps in the delivery state, lack of clinical data

on coiled stent performance, the lack of a detailed mechanism to ensure that the flaps will create a competent one-directional valve, lack of appropriate anchoring means, and the design requirements imposed by surrounding anatomical structures are ignored.

The Zadno-Azizi valve discloses a device in which flow-regulation is provided by a flap disposed within a frame structure capable of taking an insertion state and an expanded state. The preferred embodiment of the flow-regulation mechanism is defined by a longitudinal valve body made of a sufficiently resilient material with a slit(s) that extends longitudinally through the valve body. Increased sub-valvular pressure is said to cause the valve body to expand thereby opening the slit and allowing fluid flow there through. The valve body extends into the into the lumen of the body passage such that increased supra-valvular pressure will prevent the slit from opening thereby effecting one-directional flow. The device includes embedding the frame within the seal or graft material through injection molding, blow molding and insertion molding. The disadvantages of the device include the flow-regulation mechanism provides a small effective valve orifice, the turbidity caused by the multiple slit mechanisms, the large delivery profile required by the disclosed embodiments and the lack of acute anchoring means.

Finally, the Leonhardt valve is comprised of a tubular graft having radially compressible annular spring portions and a flow regulator, which is preferably a biological valve disposed within. In addition to oversizing the spring stent by 30%, anchoring means is provided by a light-activated biocompatible tissue adhesive is located on the outside of the tubular graft and seals to the living tissue. The stent section is comprised of a single piece of superelastic wire formed into a zigzag shape and connected together by crimping tubes, adhesives or welds. A malleable thin-walled, biocompatible, flexible, expandable, woven fabric graft material is connected to the outside of the stent that is in turn connected to the

biological flow regulator. Disadvantages of this device include those profile concerns associated with biological valves and unsupported graft-leaflet regulators, a large diameter complex delivery system and method which requires multiple anchoring balloons and the use of a light activated tissue adhesive in addition to any prior valvuloplasty performed, interference with surrounding anatomy and the questionable clinical utility and feasibility of the light actuated anchoring means.

Summary of the Invention

With the shortcomings of the prior art devices, there remains a need for a clinically effective endoluminally deliverable prosthetic valve that is capable of orthotopic delivery, provides a mechanically defined, biased and hemodynamically sound flow-regulation mechanism, provides sufficient force to maintain a large acute effective valvular orifice dimension which expands to a known larger effective orifice dimension, compliant with adjacent dynamic anatomical structures, does not require valve removal, does not require chronic anticoagulation treatment, meets regulatory fatigue requirements for cardiac valve prostheses, provides a low-metal high-strength stent-annulus, is surgically explantable or endoluminally removable, in addition to being able to deploy multiple valves orthotopically, provides a delivery profile which does not exceed the 12 French size suitable for peripheral vascular endoluminal delivery, combines anatomic valve exclusion and prosthetic valve delivery via a single catheter delivery system and with short duration atraumatic procedure which is easy to complete and beneficial to very sick patients.

It is, therefore, a primary of the present invention to provide a prosthetic endoluminally-deliverable unidirectional valve. The invention has multiple configurations to treat malfunctioning anatomical valves including heart and venous valves. Prosthetic cardiac

valve configurations include the chamber-to-vessel for orthotopic placement at the valvular junction between a heart chamber and a vessel, and the chamber-to-chamber for orthotopic placement at the valvular junction between two heart chambers or for septal defect repair where a septal occluding member is substituted for the flow regulator valve flaps. Prosthetic venous valve configurations include the vessel-to-vessel for orthotopic or non-orthotopic placement at a valvular junction within a vessel.

The invention consists generally of a stent body member, a graft, and valve flaps. The stent body member may be fashioned by laser cutting a hypotube or by weaving wires into a tubular structure, and is preferably made from shape memory or super-elastic materials, such as nickel-titanium alloys known as NITINOL, but may be made of balloon expandable stainless steel or other plastically deformable stent materials as are known in the art, such as titanium or tantalum, or may be self-expanding such as by weaving stainless steel wire into a stressed-tubular configuration in order to impart elastic strain to the wire. The graft is preferably a biocompatible, fatigue-resistant membrane which is capable of endothelialization, and is attached to the stent body member on at least portions of either or both the lumenal and ablumenal surfaces of the stent body member by suturing to or encapsulating stent struts. The valve leaflets are preferably formed by sections of the graft material attached to the stent body member.

The stent body member is shaped to include the following stent sections: proximal and distal anchors, a intermediate annular stent section, and at least one valve arm or blood flow regulator struts. The proximal and distal anchor sections are present at opposing ends of the prosthesis and subtend either an acute, right or obtuse angle with a central longitudinal axis that defines the cylindrical prosthesis. In either the CV or CC configurations, the proximal anchor is configured to assume approximately a right angle radiating outward from

the central longitudinal axis of the prosthesis in a manner which provides an anchoring flange. When being delivered from a delivery catheter, the proximal anchor is deployed first and engages the native tissue and anatomical structures just proximal to the anatomic valve, such as the left ventricle wall in the case of retrograde orthotopic delivery at the aortic valve. Deployment of the proximal anchor permits the intermediate annular stent section to be deployed an reside within the native valve annular space and the ablumenal surface of the intermediate annular stent section to abut and outwardly radially compress the anatomic valve leaflets against the vascular wall. The distal anchor is then deployed and radially expands to contact the vascular wall and retain the prosthesis in position, thereby excluding the anatomic valve leaflets from the bloodflow and replacing them with the prosthetic valve leaflets.

Flow regulation in the inventive stent valve prosthesis is provided by the combination of the prosthetic valve leaflets and the valve arms and is biased closed in a manner similar manner to that described for a surgically implanted replacement heart valve by Boretos, U.S. Pat. No. 4,222,126. The valve regulator-struts are preferably configured to be positioned to radiate inward from the stent body member toward the central longitudinal axis of the prosthesis. The graft-leaflet has the appearance of a partially-everted tube where the innermost layer, on the lumenal surface of the stent body member, forms the leaflets and the outer-most layer, on the ablumenal surface of the stent body member, forms a sealing graft which contacts and excludes the immobilized anatomical valve leaflets. The struts of the stent are encapsulated by the outer graft-membrane. The valve regulator-struts are encapsulated by the inner leaflet-membrane and serve to bias the valve to the closed position. The regulator-struts also prevent inversion or prolapse of the otherwise unsupported leaflet-membrane during increased supra-valvular pressure. The inner leaflet-membrane may also be attached to the outer graft-membrane at points equidistant from the valve strut-arms in a

manner analogous to that described for a surgically implanted replacement heart valve by Cox, U.S. Pat. No. 5,824,063. The combination of the thin walled properties of the leaflet-membrane, the one-sided open lumen support of the intermediate annular stent section, the free ends of the valve leaflets, the biasing and support provided by the valve regulator-struts and the attachment points all work to provide a prosthetic valvular device capable of endoluminal delivery which simulates the hemodynamic properties of a healthy anatomical cardiac or venous valve.

Brief Description of Figures

FIG. 1 is a perspective view of the inventive valve stent chamber-to-vessel embodiment in its fully deployed state.

FIG. 2 is a perspective view of the inventive valve stent chamber-to-vessel embodiment in its fully deployed state with the outermost graft layer and stent layer partially removed to show an embodiment of the valve apparatus.

FIG. 3 is a top view of the inventive valve stent chamber-to-vessel embodiment in its fully deployed state.

FIG. 4 shows the cross-sectional taken along line 4-4 of FIG. 1.

FIG. 5 is a bottom view of the inventive valve stent chamber-to-vessel embodiment in its fully deployed state.

FIG. 6A illustrates a cross-sectional view of a human heart during systole with the inventive valve stent chamber-to-vessel embodiment implanted in the aortic valve and illustrating a blood flow vector of an ejection fraction leaving the left ventricle and passing through the inventive valve stent.

FIG. 6B illustrates a cross-sectional view of a human heart during diastole with the inventive valve stent chamber-to-vessel embodiment implanted in the aortic valve and illustrating a blood flow vector of blood passing from the left atrium, through the mitral valve and into the left ventricle during and a retrograde blood flow vector blocked by the inventive valve stent in the aorta.

FIG. 7 is a perspective view of the inventive valve stent chamber-to-chamber embodiment in its fully deployed state.

FIG. 8 is a is a perspective view of the inventive valve stent chamber-to-chamber embodiment in its fully deployed state with the outermost graft layer and stent layer partially removed to show an embodiment of the valve apparatus.

FIG. 9 is a top view of the inventive valve stent chamber-to-chamber embodiment in its fully deployed state.

FIG. 10 shows the cross sectional view taken along line 10-10 of FIG. 7.

FIG. 11 is a bottom view of inventive valve stent chamber-to-chamber embodiment in its fully deployed state.

FIG. 12A illustrates a cross-sectional view of a human heart during atrial systole with the inventive valve stent chamber-to-chamber embodiment implanted at the site of the mitral valve and illustrating a blood flow vector of a filling fraction leaving the left atrium and entering the left ventricle.

FIG. 12B illustrates a cross-sectional view of a human heart during atrial diastole with the inventive valve stent chamber-to-chamber embodiment implanted at the site of the mitral valve and illustrating a blood flow vector of an ejection fraction from the left ventricle to the aorta and the back pressure against the implanted mitral valve prosthesis.

FIG. 13 is a perspective view of the chamber-to-vessel configuration in the fully deployed state.

FIG. 14 is a perspective view of the same configuration in the fully deployed state with the outermost graft layer and stent layer partially removed to show an embodiment of the valve apparatus.

FIG. 15 is a top view of the same configuration.

FIG. 16 shows the cross sectional view of the same configuration for the deployed state.

FIG. 17 is a bottom view of the same configuration.

FIG. 18A and 18B show cross-sectional views of a vein and venous valve illustrating the inventive prosthetic venous valve in the open and closed state.

FIGS. 19 is a cross-sectional diagrammatic view of a valvuloplasty and stent valve delivery catheter in accordance with the present invention.

FIG. 20A-20I are diagrammatic cross-sectional views illustrating single catheter valvuloplasty, inventive stent valve delivery and stent valve operation in situ in accordance with the method of the present invention.

Detailed Description of the Preferred Embodiments

The present invention consists generally of three preferred embodiments, each embodiment corresponding to a prosthetic stent valve configuration adapted for either heart chamber to blood vessel communication, chamber to chamber communication or vessel to vessel, or intravascular configuration. Certain elements are common to each of the preferred embodiments of the invention, specifically, each embodiment includes a stent body member which defines a central annular opening along the longitudinal axis of the stent body member, a graft member which covers at least a portion of the stent body member along either the lumenal or ablumenal surfaces of the stent body member, at least one biasing arm is provided and projects from the stent body member and into the central annular opening of the stent body member, and at least one valve flap member which is coupled to each biasing arm such that the biasing arm biases the valve flap member to occlude the central annular opening of the stent body member under conditions of a zero pressure differential across the prosthesis. The stent body member is preferably made of a shape memory material or superelastic material, such as NITINOL, but also be fabricated from either plastically deformable materials or spring-elastic materials such as is well known in the art. Additionally, the stent body member has three main operable sections, a proximal anchor section, a distal anchor section and an intermediate annular section which is intermediate the proximal and distal anchor sections. Depending upon the specific inventive embodiment, the distal and proximal anchor sections may be either a diametrically enlarged section or may be a flanged section. The intermediate annular section defines a valve exclusion region and primary blood flow channel of the inventive valve stent. The intermediate annular section defines a lumenal opening through which blood flow is established. The transverse cross-section of the lumenal opening may be circular, elliptical, ovular, triangular or quadralinear, depending upon the specific application for which the valve stent is being employed. Thus, for example, where a tricuspid valve is particularly stenosed, it may be preferable to employ a valve stent with a lumenal opening in the intermediate annular section which has a triangular transverse cross-sectional dimension.

Chamber-to-Vessel Configuration

An implantable prosthesis or prosthetic valve in accordance with certain embodiments of the chamber-to-vessel CV configuration of the present invention is illustrated generally in Figures 1-5. The chamber-to-vessel valve stent 10 consists of an expandable stent body member12 and graft member 11. The stent body member 12 is preferably made from a shape memory and/or superelastic NITINOL material, or thermomechanically similar materials, but may be made of plastically deformable or elastically compliant materials such as stainless steel, titanium or tantalum. The graft member 11 is preferably made of biologically-derived membranes or biocompatible synthetic materials such as DACRON or expanded polytetrafluoroethylene. The stent body member 12 is configured to have three functional sections: a proximal anchor flange 22, an intermediate annular section 20 and a distal anchor section 16. The stent body member 12, as with conventional stents is formed of a plurality of stent struts 13 which define interstices 14 between adjacent stent struts 13. The stent body member preferably also includes a transitional section 18 which interconnects the intermediate annular section 20 and the distal anchor section 16, which together define a valve exclusion region of the inventive stent valve 10 to exclude the anatomic valve after implantation. The proximal anchor flange 22, the intermediate annular section 20 and the distal anchor section 16 are each formed during the formation of the stent body member and are formed from the same material as the stent body member and comprise stent struts 13 and intervening interstices 14 between adjacent pairs of stent struts 13. The anchor flange 22, for example, consists of a plurality of stent struts and a plurality of stent interstices, which project radially outwardly away from the central longitudinal axis of the stent body member. Thus, the different sections of the stent body member 12 are defined by the positional

orientation of the stent struts and interstices relative to the central longitudinal axis of the stent body member 12.

With reference to FIG. 2, there is shown in greater detail the valve body 26 and valve arms or flow regulator struts 24 coupled to the stent body member 12. The valve body 26 subtends the central annular opening of the stent valve 10 and is illustrated in its closed position. In accordance with one embodiment of the present invention, the graft member 11 consists of an outer or ablumenal graft member 11a and an inner or lumenal graft member 11b. The outer graft member 11a encloses at least a portion of the ablumenal surface of the intermediate annular section 20 of the stent body member, while the inner graft member 11b is coupled, on the lumenal surface of the intermediate annular section 20 of the stent body member 12, to the outer graft member 11a through the interstices 14 of the stent body member. The valve body 26 is formed by everting the inner graft member11b toward the central longitudinal axis of the stent body member 12 such that free ends or valve flap portions 28 of the inner graft member 11b are oriented toward the distal anchor section 16 of the stent body member 12 and a pocket or envelope 27 is formed at the eversion point of the inner graft member 11b adjacent the junction between the intermediate annular section 20 and the proximal anchor flange 22 of the stent body member 12. Alternatively, portions of the outer graft member 11a may be passed through to the lumenal surface of the stent body member 12, thereby becoming the inner graft member 11b and everted to form the valve body 26.

Valve arms or regulator struts 24 are coupled or formed integral with the stent body member 12 and are positioned adjacent the junction point between intermediate annular section 20 and the proximal anchor flange 22 of the stent body member 12. The valve arms

24 are oriented radially inward toward the central longitudinal axis of the stent body member 12 when in their zero strain state. The valve arms 24 are attached or coupled to the valve flap portions 28 of the inner graft member leaflets to bias the valve flap portions 28 to the closed position when under zero pressure differential across the stent valve 10.

The zero strain position of the valve arms 24 is radially inward and orthogonal to the central longitudinal axis of the stent valve 10. Valve arms 24 have a length which is preferably longer than the radius of the lumenal diameter of the stent valve 10, and they extent distally into the lumen of the stent valve 10 such that, in conjunction with the action of the valve leaflets 28, the valve arms 24 are prevented from achieving their zero strain configuration thereby biasing the valve closed. As shown in FIG. 4, the valve arms 24 force the valve leaflets 28 to collapse into the center of the lumen of the stent valve 10, thus biasing the valve to its closed position.

It is preferable to couple sections of the valve flaps 28, along a longitudinal seam 29, to the inner graft member 11b and the outer graft member 11a at points equidistant from the valve arms 24 in order to impart a more cusp-like structure to the valve flaps 28. It should be appreciated, that the graft member 11 should cover at least a portion of the ablumenal surface of the stent body member 12 in order to exclude the anatomic valves, but may also cover portions or all of the stent valve member 12, including the distal anchor section 16, the intermediate annular section 20, the transition section 18 and/or the proximal anchor flange 22, on either or both of the lumenal and ablumenal surfaces of the stent body member.

In accordance with a particularly preferred embodiment of the CV valve stent 10, the proximal anchor flange 22, which consists of a plurality of stent struts and stent interstices which project radially outward away from the central longitudinal axis of the valve stent 10,

is configured to have one or more stent struts eliminated from the proximal anchor flange 22 to define an open region which is positioned in such a manner as to prevent the CV valve stent 10 from interfering with or impinging upon an adjacent anatomic structure. For example, where the CV valve stent 10 is to be an aortic valve prosthesis, it is known that the mitral valve is immediately adjacent the aortic valve, and the mitral valve flaps deflect toward the left ventricle. Thus, placing the CV valve stent 10 such that the proximal anchor flange 22 is adjacent the mitral valve might, depending upon the particular patient anatomy, interfere with normal opening of the mitral valve flaps. By eliminating one or more of the stent struts in the proximal anchor flange 22, an opening is created which permits the mitral valve flaps to deflect ventricularly without impinging upon the proximal anchor flange 22 of the CV valve stent 10.

Similarly, the stent struts of the CV valve stent 10 may be oriented in such a manner as to create interstices of greater or smaller area between adjacent struts, to accommodate a particular patient anatomy. For example, where the stent struts in the distal anchor section 16 would overly an artery branching from the aorta, such as the coronary ostreum arteries, it may be desirable to either eliminate certain stent struts, or to configure certain stent struts to define a greater interstitial area to accommodate greater blood flow into the coronary ostreum.

In the case of providing an oriented opening in the proximal anchor flange, or an oriented opening in the interstitial spaces of the distal anchor, it is desirable to provide radiopaque markers on the stent body member 12 to permit the CV valve stent to be oriented correctly relative to the anatomic structures.

Figures 6A and 6B illustrate the inventive CV stent valve 10 implanted in the position of the aortic valve and excluding the anatomic aortic valve AV. FIG. 6A illustrates the heart

during systole in which a positive pressure is applied to the prosthetic aortic valve by contraction of the left ventricle LV and the ejection fraction represented by the arrow. The systolic pressure overcomes the bias exerted by the valve arms 24 and causes the valve leaflets 26 to open and release the ejection fraction into the aorta. FIG. 6 B illustrates that the presence of a negative pressure head across the stent valve 10, *i.e.* such as that during diastole, causes the biased valve leaflets 26 which are already closed, to further close, and prevent regurgitation from the aorta into the left ventricle.

Chamber-to-Chamber Configuration

Figures 7-11 illustrate the inventive stent valve in the chamber-to-chamber (CC) configuration 40. The CC valve stent 40 is constructed in a manner which is virtually identical to that of the CV valve stent 10 described above, except that the distal anchor section 16 of the CV valve stent 10 is not present in the CC valve stent 40, but is substituted by a distal anchor flange 42 in the CC stent valve. Thus, like the CV valve stent 10, described above, the CC valve stent 40 if formed of a stent body member 12 and a graft member 11, with the graft member having lumenal 11b and ablumenal 11a portions which cover at least portions of the lumenal and ablumenal surfaces of the stent body member 12, respectively. The CC valve stent 40 has both a proximal anchor flange 44 and a distal anchor flange 42 which are formed of sections of the stent body member 12 which project radially outward away from the central longitudinal axis of the CC valve stent 40 at opposing ends of the stent body member 12.

Like the CV valve stent 10, the lumenal graft portion 11b is everted inwardly toward the central longitudinal axis of the valve stent 40 and free ends 28 of the lumenal graft portion

11b to form valve flaps 26 which project distally toward distal anchor flange 42. Flow regulation struts 24 are coupled to or integral with the proximal anchor flange 44 and intermediate annular section 20 and project radially inward toward the central longitudinal axis of the CC valve stent 40. The valve flaps 26 are coupled to the flow regulation struts 24 and the flow regulation struts 24 bias the valve flaps 26 to a closed position under a zero strain load.

Like with the CV stent valve 10, it is preferable to couple sections of the valve flaps 28, along a longitudinal seam 29, to the inner graft member 11b and the outer graft member 11a at points equidistant from the valve arms 24 in order to impart a more cusp-like structure to the valve flaps 28.

Turning to Figures 12A and B there is illustrated the inventive CC stent valve 40 implanted in the position of the mitral valve and excluding the anatomic mitral valve MV. FIG. 12A illustrates the heart during atrial systole in which a positive pressure is applied to the prosthetic mitral valve by contraction of the left atrium LA and the pressure exerted by the blood flow represented by the arrow. The atrial systolic pressure overcomes the bias exerted by the valve arms 24 onto the valve leaflets 26, and causes the valve leaflets 26 to open and release the atrial ejection fraction into the left ventricle. FIG. 12 B illustrates that the presence of a negative pressure head across the stent valve 40, *i.e.* such as that during atrial diastole, causes the biased valve leaflets 26 which are already closed, to further close, and prevent backflow from the left ventricle into the left atrium.

In accordance with another preferred embodiment of the invention, the CC configuration may be adapted for use in repairing septal defects. By simply substituting a membrane for the valve leaflets 26, the lumen of the stent body member 12 is occluded. The

CC stent valve 40 may be delivered endoluminally and placed into a position to subtend a septal defect and deployed to occlude the septal defect.

Vessel-to-Vessel Configuration

Turning now to Figures 13-17, there is illustrated the inventive stent valve in its vessel-to-vessel (VV) valve stent configuration 50. The VV valve stent 50 is constructed in a manner which is virtually identical to that of the CV valve stent 10 described above, except that the proximal anchor flange 22 of the CV valve stent 10 is not present in the VV valve stent 50, but is substituted by a proximal anchor section 52 in the VV stent valve. Thus, like the CV valve stent 10, described above, the VV valve stent 50 is formed of a stent body member 12 and a graft member 11, with the graft member having lumenal 11b and ablumenal 11a portions which cover at least portions of the lumenal and ablumenal surfaces of the stent body member 12, respectively. The VV valve stent 50 has both a proximal anchor section 52 and a distal anchor section 54 which are formed of sections of the stent body member 12 which are diametrically greater than the intermediate annular section 20 of the VV valve stent 50. Transition sections 56 and 58 taper outwardly away from the central longitudinal axis of the VV valve stent 50 and interconnect the intermediate annular section 20 to each of the distal anchor section 54 and the proximal anchor section 52, respectively.

Like the CV valve stent 10, in the VV valve stent 50, the graft member 11, particularly the lumenal graft portion 11b or the ablumenal graft portion 11a, or both, is everted inwardly toward the central longitudinal axis of the valve stent 40 and free ends 28 of the lumenal graft portion 11b to form valve flaps 26 which project distally toward distal anchor flange 42. Flow regulation struts 24 are coupled to or integral with the stent body

member at the proximal transition section 58 and project radially inward toward the central longitudinal axis of the VV valve stent 50. The valve flaps 26 are coupled to the flow regulation struts 24 and the flow regulation struts 24 bias the valve flaps 26 to a closed position under a zero strain load. Like with the CV stent valve 10 and the CC stent valve 40, it is preferable to couple sections of the valve flaps 28, along a longitudinal seam 29, to the inner graft member 11b and the outer graft member 11a at points equidistant from the valve arms 24 in order to impart a more cusp-like structure to the valve flaps 28.

Turning to Figures 18A and B there is illustrated the inventive VV stent valve 50 implanted in the position of a venous valve and excluding the anatomic venous valve flaps VE. FIG. 18A illustrates the vein under systolic blood pressure in which a positive pressure is applied to the prosthetic venous valve and the pressure exerted by the blood flow represented by the arrow. The systolic pressure overcomes the bias exerted by the valve arms 24 onto the valve leaflets 26, and causes the valve leaflets 26 to open and permit blood flow through the prosthesis. FIG. 18 B illustrates that the presence of a negative pressure head across the VV stent valve 50, *i.e.* such as which exists at physiological diastolic pressures, causes the biased valve leaflets 26 which are already closed, to further close, and prevent backflow from the left ventricle into the left atrium.

The purpose of the proximal 54 and distal 52 anchor sections of the stent body member 12 is to anchor the prosthesis at the anatomic vessel-vessel junction, such as a venous valve, while causing minimal interference with adjacent tissue. The intermediate annular section 20 of the VV stent valve 50 excludes diseased anatomic leaflets and surrounding tissue from the flow field. The flare angle of the transition sections 56, 58 between the intermediate annular section 20 and each of the proximal and distal anchor

sections 54, 52, respectively, may be an acute angle, a right angle or an obtuse angle, depending upon the anatomical physiological requirements of the implantation site. Alternatively, the transition sections 56, 58 may be coplanar with the proximal and distal anchor section 52, 54, respectively, thereby, eliminating any transition flare angle, depending upon the anatomical and physiological requirements of the delivery site.

Single Catheter Valvuloplasty Stent Valve Delivery System and Method of Delivery

In accordance with the present invention, there is also provide a single catheter valvuloplasty and valve stent delivery system 200 illustrated in FIG. 19. The objective of the single catheter delivery system 200 is to permit the surgeon or interventionalist to percutaneously deliver and deploy the inventive valve stent 10, 40 or 50 at the desired anatomical site and to perform valvuloplasty with a single catheter. In accordance with the preferred embodiment of the single catheter delivery system 200 of the present invention, there is provided a catheter body210 having dual lumens212, 216. A first lumen 212 is provided as a guidewire lumen and is defined by a guidewire shaft 222 which traverses the length of the catheter body 210. A second lumen is an inflation lumen 216 for communicating an inflation fluid, such as saline, from an external source, through an inflation port 240 at the operator end of the catheter 210, to an inflatable balloon 214 located at or near the distal end of the catheter body 210. The inflation lumen 216 is defined by an annular space between the lumenal surface of the catheter body 210 and the ablumenal surface of the guidewire shaft 222. A capture sheath 217 is provided at the distal end 215 of the catheter body 210 and is positioned adjacent and distal the balloon 214. The capture sheath 217 defines an annular space about the guidewire lumen 212 and the capture sheath 217 into

which the stent valve 10, 40 or 50 is positioned and retained during delivery. An annular plug member 220 is within the inflation lumen 216 distal the balloon 214 and terminates the inflation lumen 216 in a fluid tight manner. Annular plug member 220 has a central annular opening 221 through which the guidewire shaft 222 passes. The annular plug member 220 is coupled to the guidewire shaft 222 and is moveable axially along the central longitudinal axis of the catheter 200 by moving the guidewire shaft 222. The annular plug member 220 also serves to abut the stent valve 10, 40 and 50 when the stent valve 10, 40 and 50 is positioned within the capture sheath 217. The guidewire shaft 222 passes through the capture sheath 217 and terminates with an atraumatic tip 218 which facilitates endoluminal delivery without injuring the native tissue encountered during delivery. With this configuration, the stent valve is exposed by proximally withdrawing the catheter body 210, while the guidewire shaft 222 is maintained in a fixed position, such that the annular plug member 220 retains the position of the stent valve as it is uncovered by capture sheath 217 as the capture sheath 217 is being proximally withdrawn with the catheter body 210.

In many cases the anatomic valve will be significantly stenosed, and the valve flaps of the anatomic valve will be significantly non-compliant. The stenosed valves may be incapable of complete closure permitting blood regurgitation across the anatomic valve. Thus, it may be desirable to configure the inflatable balloon 214 to assume an inflation profile which is modeled to maximally engage and dilatate the anatomic valves. For example, a tricuspid valve, such as the aortic valve may stenose to an opening which has a generally triangular configuration. In order to maximally dilatate this triangular opening, it may be desirable to employ a balloon profile which assumes a triangular inflation profile. Alternatively, it may be advantageous to configure the balloon such that it does not fully

occlude the anatomic lumen when inflated, but permits a quantum of blood flow to pass around the balloon in its inflated state. This may be accomplished by providing channels or ridges on the ablumenal surface of the balloon. Additionally, irregular inflation profiles of the balloon may facilitate continuous blood flow about the inflated balloon. Furthermore, it may be desirable to configure the balloon to have an hour-glass inflation profile to prevent migration or slippage of the balloon in the anatomic valve during valvuloplasty.

In accordance with the present invention, it is preferable that the capture sheath 217 be made of a material which is sufficiently strong so as prevent the stent valve 10, 40, 50 from impinging upon and seating into the capture sheath 217 due to the expansive pressure exerted by the stent valve 10, 40, 50 against the capture sheath. Alternatively, the capture sheath 217 may be lined with a lubricious material, such as polytetrafluoroethylene, which will prevent the capture sheath 217 from exerting drag or frictional forces against the stent valve during deployment of the stent valve.

In accordance with the present invention, it is also contemplated that the position of the balloon 214 and the capture sheath 217 may be reversed, such that the balloon 214 is distal the capture sheath 217. In this configuration, the anatomic valve may be radially enlarged by dilatating the balloon 214, then the catheter moved distally to position the capture sheath 217 at the anatomic valve and deployed in the manner described above. This would also allow for post-deployment balloon expansion of the deployed stent valve without the need to traverse the prosthetic valve in a retrograde fashion. Alternatively, the catheter 200 of the present invention may be provided without a balloon 214 in those cases where valvuloplasty is not required, *e.g.*, where a stenotic valve does not need to be opened such as

with a regurgitating valve, and the catheter 200 is terminated at its distal end with only a capture sheath 217, and deployment occurs as described above.

Turning now to Figures 20A-20I there is illustrated the sequence of steps in delivery of the stent valve of the present invention, valvuloplasty of the aortic valve and deployment of the stent valve at the position of the aortic valve. The single catheter delivery system 501 having a distal balloon 502 and a capture sheath 503 covering the valve stent 10 (not shown in Figs 20A-B), is delivered percutaneously either through a femoral or subclavian artery approach, and traverses the aorta and is passed through the aortic valve 510 such that the balloon 503 on the distal end of catheter 501 is adjacent the aortic valve 510 and the capture sheath 503 is within the left ventricle 504. A valvuloplasty step 520 is performed by inflating balloon 503 to dilate the aortic valve and deform the aortic valve flaps against the aorta wall adjacent the aortic valve. After the valvuloplasty step 520, delivery of the valve stent 505 is initiated by stabilizing the guidewire shaft (not shown) while the catheter body is withdrawn antegrade relative to the blood flow until the proximal anchor flange section of the valve stent 505 is exposed by the withdrawal of the capture sheath 503. The distal anchor flange of the valve stent 505 is then positioned at the junction between the aortic valve and the left ventricle at step 540, such that the distal anchor flange engages the ventricular surface of the aortic valve. The valve stent is fully deployed at step 550 by retrograde withdrawal of the catheter body 501 which continues to uncover the intermediate annular section of the valve stent and release the aortic valve stent 505. at the aortic valve site 510. In step 560, the valve stent 505 is completely deployed from the catheter 501 and the capture sheath 503. The distal anchor section of the valve stent 505 expands and contacts the lumenal wall of the aorta, immediately distal the aortic valve, thereby excluding the aortic valve flaps from the

lumen of the prosthetic aortic valve stent 505. In step 570, the atraumatic tip and guidewire are retracted by retrograde movement of the guidewire shaft of the catheter, and the catheter 501 is withdrawn from the patient. Figures 20H and 20I depict the implanted valve stent 505 during diastole and systole, respectively. During ventricular diastole 580, the left ventricle expands to draw blood flow 506 from the left atrium into the left ventricle. A resultant negative pressure gradient is exerted across the valve stent 505, and the valve arms and valve flaps 506 of the valve stent 505 are biased to the closed position to prevent a regurgitation flow 507 from passing through the valve stent 505 and into the left ventricle 504. During ventricular systole 590, the left ventricle contracts and exerts a positive pressure across the valve stent 505, which overcomes the bias of the valve arms and valve flaps, which open 508 against the lumenal wall of the intermediate annular section of the valve stent and permit the ejection fraction 509 to be ejected from the left ventricle and into the aorta.

The method for delivery of the CC valve stent 40 or the VV valve stent 50 is identical to that of the CV stent 10 depicted in Figures 20A-20I, except that the anatomical location where delivery and deployment of the valve stent occurs is, of course, different.

Thus, while the present invention, including the different embodiments of the valve stent, the delivery and deployment method and the single catheter valvuloplasty and delivery system, have been described with reference to their preferred embodiments, those of ordinary skill in the art will understand and appreciate that the present invention is limited in scope only by the claims appended hereto.

What is claimed is:

1. An implantable valvular prosthesis, comprising:

   a. a stent body member having lumenal and ablumenal surfaces thereof and a central annular opening along a central longitudinal axis of the stent body member;

   b. a graft member covering at least a portion of at least one of the lumenal and ablumenal surfaces of the stent body member;

   c. at least one biasing arm projecting from the stent body member and into the central annular opening of the stent body member; and

   d. at least one valve flap member coupled to the at least one biasing arm and to at least a portion of the graft member, the at least one valve flap member assuming a position, under zero pressure differential across the prosthesis, which occludes the central annular opening of the stent body member.

2. The implantable valvular prosthesis according to Claim 1, wherein the stent body member further comprises a proximal anchoring section.

3. The implantable valvular prosthesis according to Claim 1, wherein the stent body member further comprises a distal anchoring section.

4. The implantable valvular prosthesis according to Claim 2, wherein the stent body further comprises a distal anchoring section.

5. The implantable valvular prosthesis according to Claim 2, wherein the proximal anchoring section further comprises a plurality of stent struts which project radially outward away from the central longitudinal axis of the stent body member.

6. The implantable valvular prosthesis according to Claim 3, wherein the distal anchoring section further comprises a radially enlarged section of the stent body member which communicates with the central annular opening of the stent body member.

7. The implantable valvular prosthesis according to Claim 1, wherein the graft member further comprises an outer graft member coupled to the ablumenal surface of the stent body member.

8. The implantable valvular prosthesis according to Claim 1, wherein the graft member further comprises an inner graft member coupled to the lumenal surface of the stent body member.

9. The implantable valvular prosthesis according to Claim 7, wherein the graft member further comprises an inner graft member coupled to the lumenal surface of the stent body member.

10. The implantable valvular prosthesis according to Claim 9, wherein a terminal portion of the inner graft member is everted inwardly toward the central longitudinal axis of the stent body member and coupled at the eversions to the biasing arms to form the valve flap members.

11. The implantable valvular prosthesis according to Claim 10, wherein the at least one valve flap member comprise a plurality of valve flap members coupled at portions thereof to the luminal surface of the inner graft member.

12. The implantable valvular prosthesis according to Claim 11, wherein the plurality of valve flap members are coupled at equidistantly spaced intervals about the luminal surface of the inner graft member.

13. The implantable valvular prosthesis according to Claim 4, wherein the distal anchor section further comprises a diametrically enlarged section of the stent body member.

14. The implantable valvular prosthesis according to Claim 13, wherein the stent body member further comprises a flared transition section interdisposed between and interconnecting the intermediate annular section of the stent body member and the distal anchor section of the stent body member, the flared transition section projecting radially outward from the central longitudinal axis of the stent body member.

15. The implantable valvular prosthesis according to Claim 13, wherein the proximal anchor section further comprises a flange which projects radially outward and away from the central longitudinal axis of the stent body member.

16. The implantable valvular prosthesis according to Claim 15, wherein the flange projects substantially perpendicular to the central longitudinal axis of the stent body member.

17. The implantable valvular prosthesis according to Claim 13, wherein the proximal anchor section further comprises a diametrically enlarged section of the stent body member.

18. The implantable valvular prosthesis according to Claim 17, wherein the stent body member further comprises a flared transition section interdisposed between and interconnecting the intermediate annular section of the stent body member and the proximal anchor section anchor section of the stent body member, the flared transition section projecting radially outward from the central longitudinal axis of the stent body member.

19. The implantable valvular prosthesis according to Claim 14, wherein the proximal anchor section comprise a diametrically enlarged section of the stent body member and the stent body member further comprises a flared transition section interdisposed between and interconnecting the intermediate annular section of the stent body member and the proximal anchor section of the stent body member, the flared transition section projecting radially outward from the central longitudinal axis of the stent body member.

20. The implantable valvular prosthesis according to Claim 4, wherein proximal and the distal anchor sections of the stent body member each further comprise a flange which projects radially outward and away from the central longitudinal axis of the stent body member.

21. The implantable valvular prosthesis according to Claim 20, wherein the flanges of each of the proximal and distal anchor section of the stent body member project substantially perpendicular to the central longitudinal axis of the stent body member.

22. The implantable valvular prosthesis according to Claim 4, wherein the each of the proximal and the distal anchor sections further comprise diametrically enlarged sections of the stent body member.

23. The implantable valvular prosthesis according to Claim 22, wherein the stent body member further comprises proximal and distal flared transition sections interdisposed between and interconnecting opposing ends of the intermediate annular section of the stent body member and the proximal and distal anchor section anchor section of the stent body member, respectively, the flared transition sections projecting radially outward from the central longitudinal axis of the stent body member.

24. The implantable valvular prosthesis according to Claim 1, wherein the at least one biasing arm has a length which is greater than a length of a radius of the central annular opening of the stent body member.

25. The implantable valvular prosthesis according to Claim 15, wherein the flange further comprises an oriented opening in the flange.

26. An implantable valvular prosthesis, comprising:

a. a tubular stent body member comprising a plurality of spaced struts with interstices intermediate adjacent pairs of struts, the tubular stent body having lumenal and ablumenal surfaces thereof, a central annular

opening along a central longitudinal axis of the stent body member, a proximal anchor section, a distal anchor section and an intermediate annular section;

b. a graft member covering at least a portion of at least one of the lumenal and ablumenal surfaces of the stent body member;

c. biasing arms projecting from the stent body member at a proximal end of the intermediate annular section and into the central annular opening of the stent body member; and

d. valve flap members coupled to the biasing arms and to at least a portion of the graft member, the valve flap members assuming a closed position under zero strain load conditions.

27. The implantable valvular prosthesis according to Claim 26, wherein proximal and the distal anchor sections of the stent body member each further comprise a flange which projects radially outward and away from the central longitudinal axis of the stent body member.

28. The implantable valvular prosthesis according to Claim 27, wherein the flanges of each of the proximal and distal anchor section of the stent body member project substantially perpendicular to the central longitudinal axis of the stent body member.

29. The implantable valvular prosthesis according to Claim 26, wherein the each of the proximal and the distal anchor sections further comprise diametrically enlarged sections of the stent body member.

30. The implantable valvular prosthesis according to Claim 29, wherein the stent body member further comprises proximal and distal transition sections interdisposed between and interconnecting opposing ends of the intermediate annular section of the stent body member and the proximal and distal anchor section anchor section of the stent body member, respectively, the transition sections projecting radially outward from the central longitudinal axis of the stent body member.

31. The implantable valvular prosthesis according to Claim 26, wherein the proximal anchor section further comprises a flange section which projects radially outward from the stent body member away from the central longitudinal axis of the stent body member, and distal anchor section further comprises a diametrically enlarged section of the stent body member.

32. The implantable valvular prosthesis according to Claim 31, further comprising a transition section intermediate the distal anchor section and the intermediate annular section.

33. The implantable valvular prosthesis according to Claim 31, wherein the flange section projects substantially perpendicular away from the central longitudinal axis of the stent body member.

34. A catheter, comprising:

a. a catheter body defining a central longitudinal lumen;

b. an inflatable balloon positioned proximate the distal end of the catheter body and in fluid flow communication with the central longitudinal lumen;

c. a sheath positioned proximate the distal end of the catheter, distal the inflatable balloon and fixedly coupled to the catheter body and distally extensible therefrom;

d. a guidewire shaft positioned co-axially within the central longitudinal lumen of the catheter body and passing through an entire longitudinal length of the catheter body; and

e. an annular plug member concentrically coupled to the guidewire shaft and positioned distal the inflatable balloon and proximal the sheath, the annular plug member terminating the central longitudinal lumen of the catheter body in a fluid tight manner and being moveable therein.

35. The catheter of Claim 34, further comprising a valve stent member, in a reduced diametric state, positioned within the sheath and concentrically about the guidewire shaft and distal the annular plug member.

36. A method of endoluminally delivering a valve stent within an anatomic passageway, comprising the steps of:

a. percutaneously passing a catheter endoluminally through an anatomic passageway to a valved anatomic situs within a body;

b. dilatating an inflatable balloon section of the catheter to dilatate anatomic valves at the anatomic situs within the body;

c. withdrawing the catheter from the dilatated valves at the anatomic situs and positioning a proximal end of a valve stent residing on the catheter;

d. positionally stabilizing the proximal end of the valve stent within the anatomic situs and withdrawing the catheter, inflatable balloon and sheath in a retrograde fashion thereby deploying the valve stent within the anatomic situs.

37. An implantable septal prosthesis, comprising:

a. a tubular stent body member comprising a plurality of spaced struts with interstices intermediate adjacent pairs of struts, the tubular stent body having lumenal and ablumenal surfaces thereof , a central annular opening along a central longitudinal axis of the stent body member, a proximal anchor section, a distal anchor section and an intermediate annular section;

b. a graft member covering at least a portion of at least one of the lumenal and ablumenal surfaces of the stent body member and subtending the central annular opening of the tubular stent body member.

38. The implantable valvular prosthesis according to Claim 38, wherein proximal and the distal anchor sections of the stent body member each further comprise a flange which projects radially outward and away from the central longitudinal axis of the stent body member.

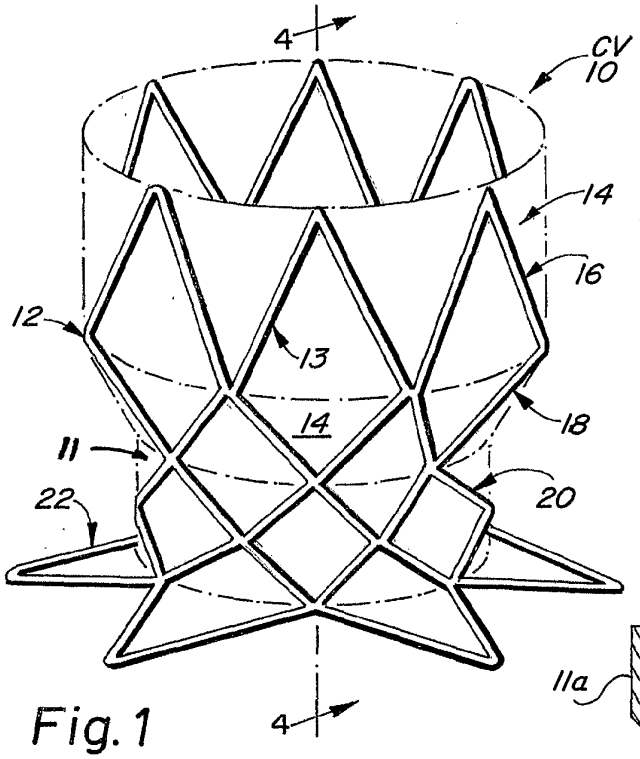

Fig. 1

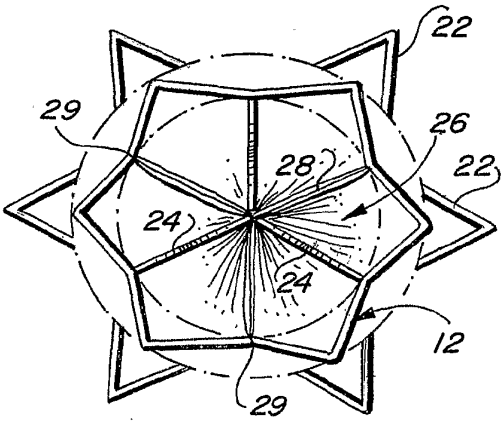

Fig. 3

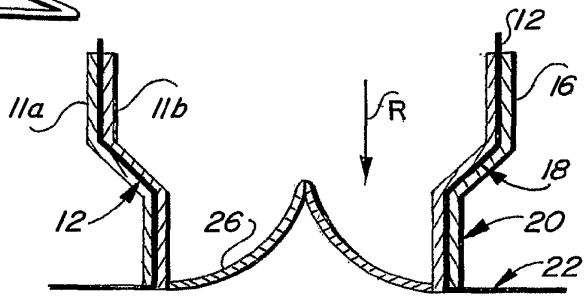

Fig. 4

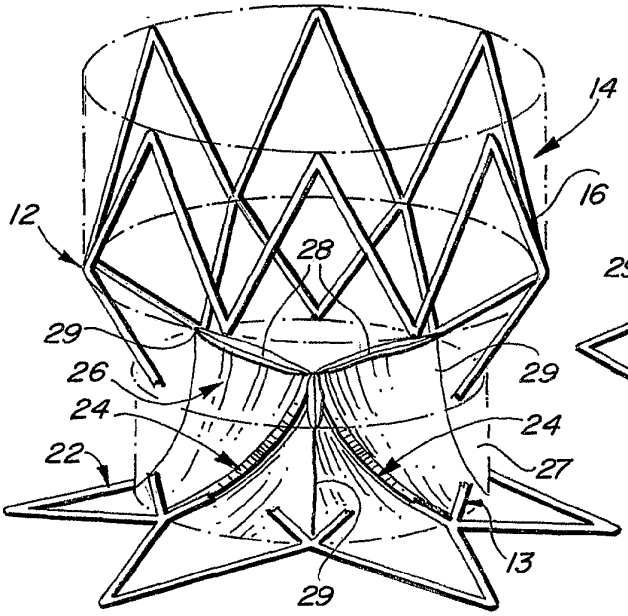

Fig. 2

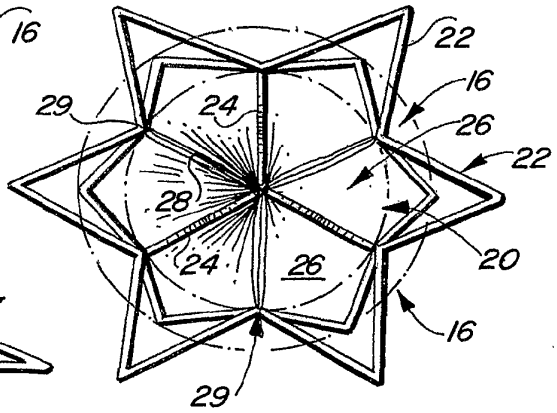

Fig. 5

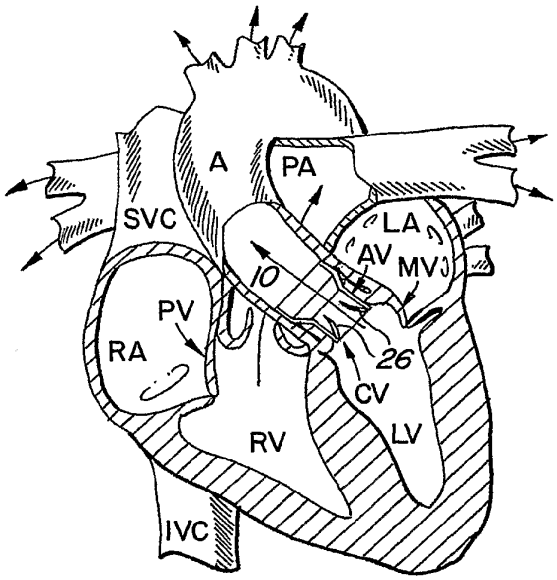

Fig. 6A

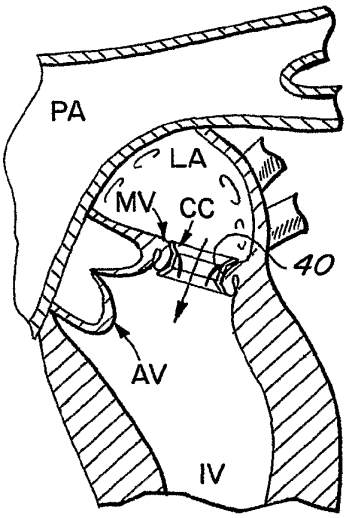

Fig. 12A

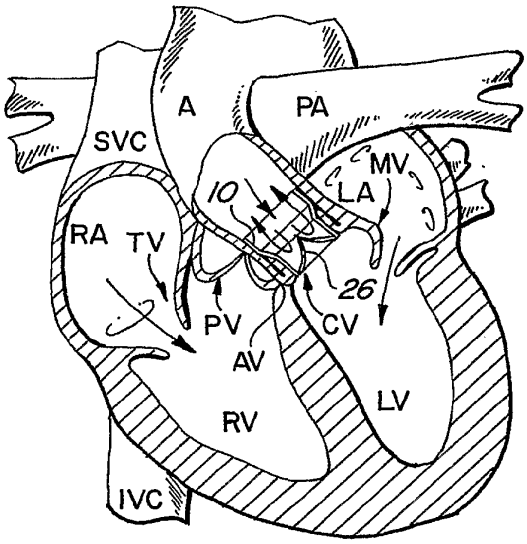

Fig. 6B

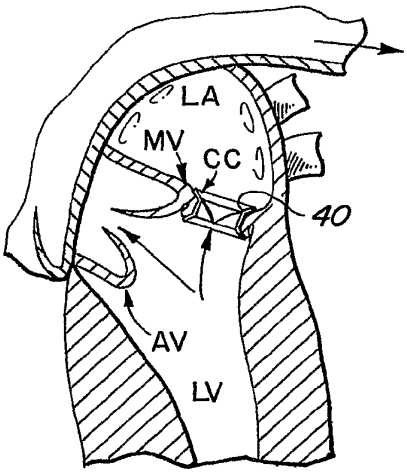

Fig. 12B

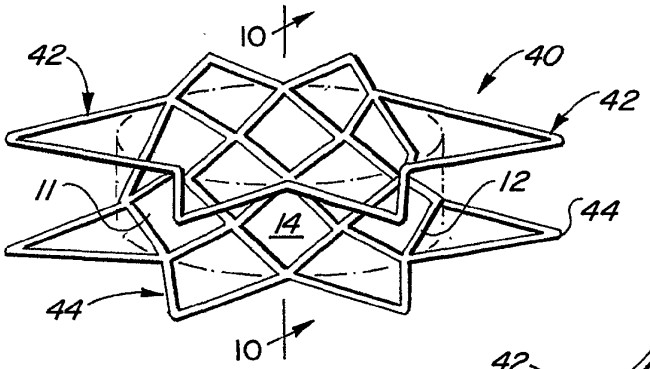

Fig. 7

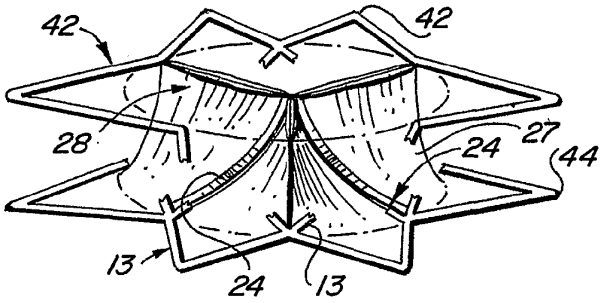

Fig. 8

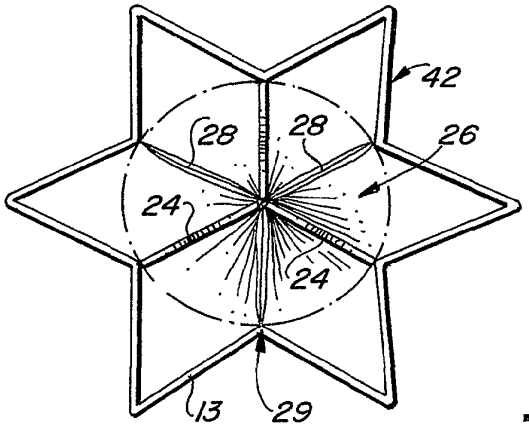

Fig. 9

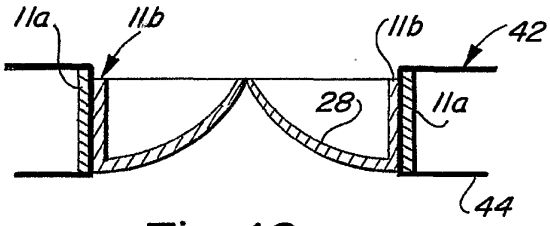

Fig. 10

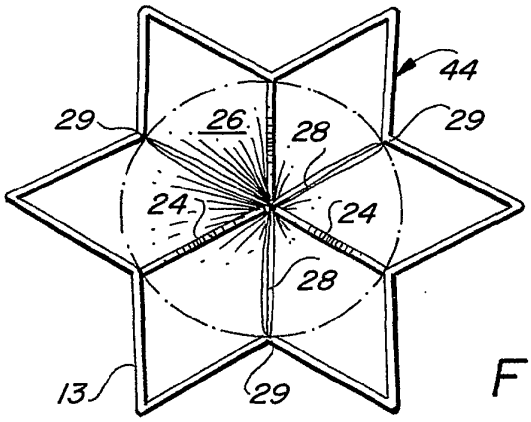

Fig. 11

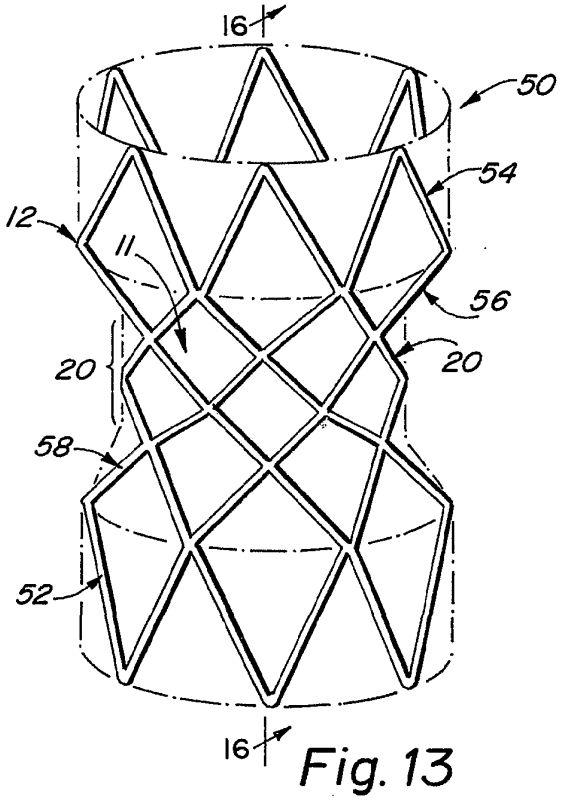

Fig. 13

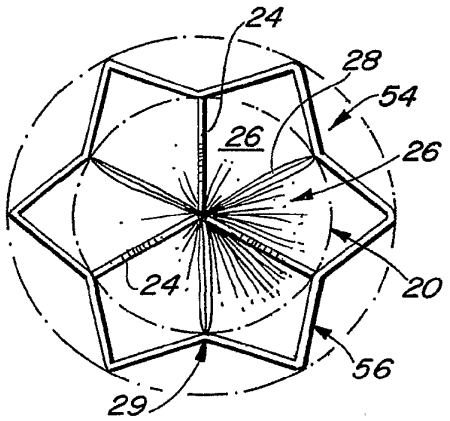

Fig. 15

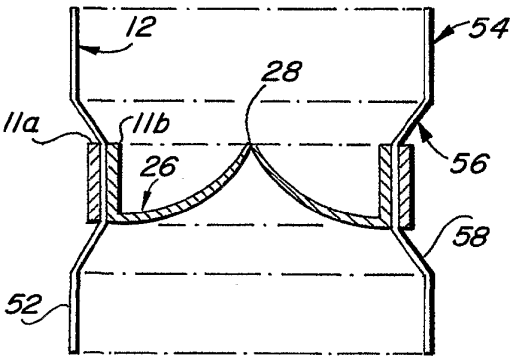

Fig. 16

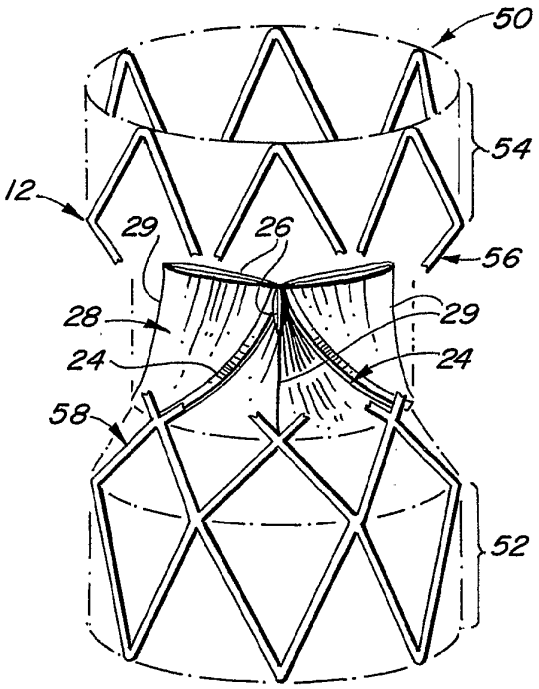

Fig. 14

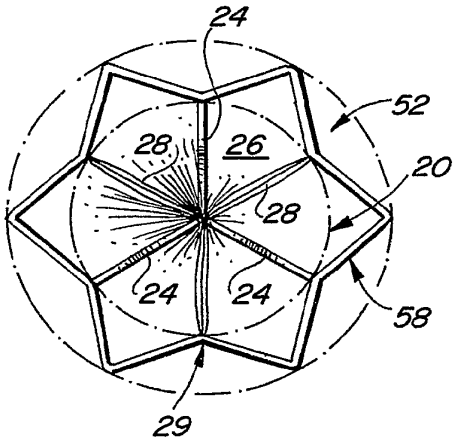

Fig. 17

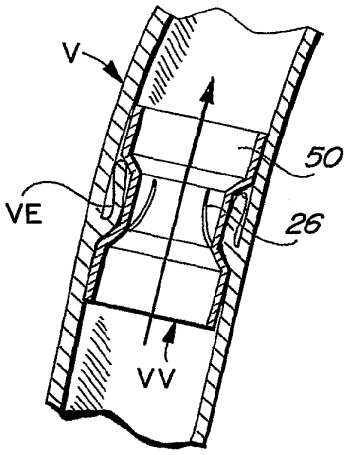

Fig. 18A

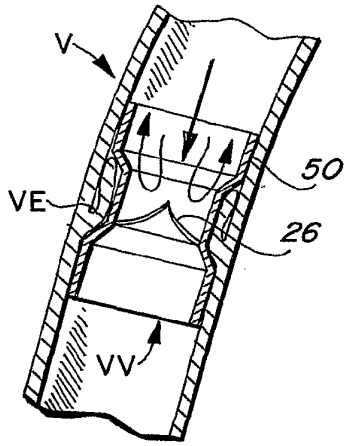

Fig. 18B

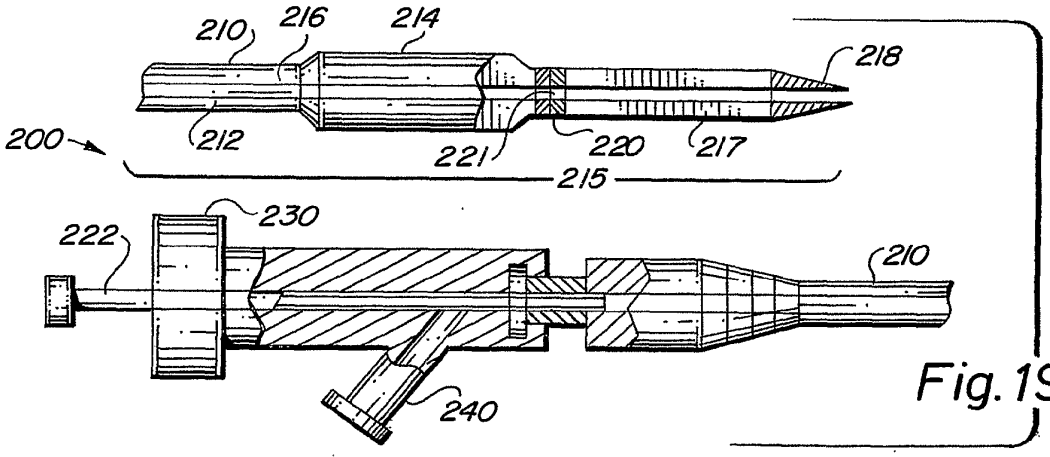

Fig. 19

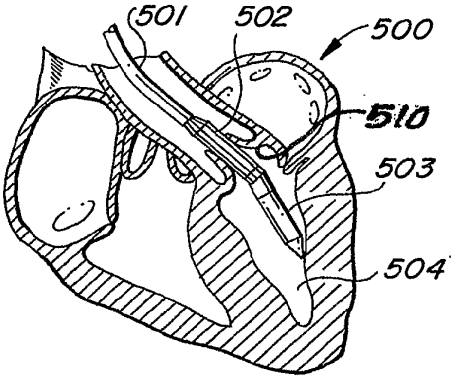

Fig. 20A

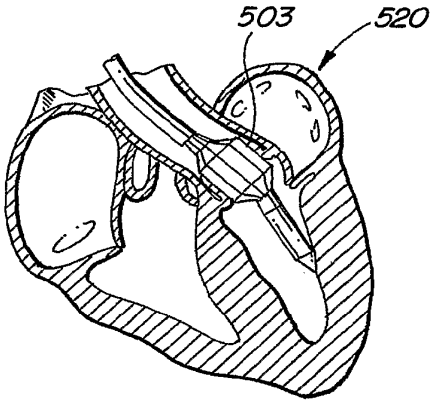

Fig. 20B

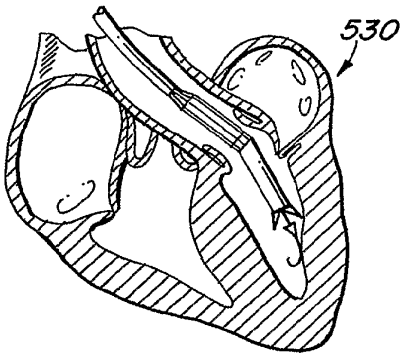

Fig. 20C

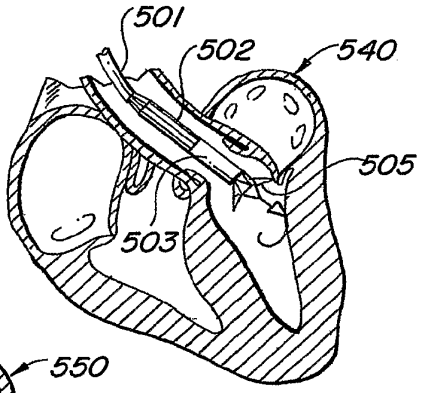

Fig. 20D

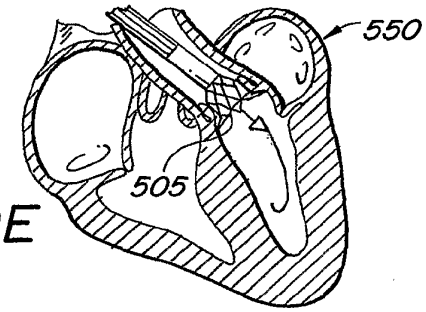

Fig. 20E

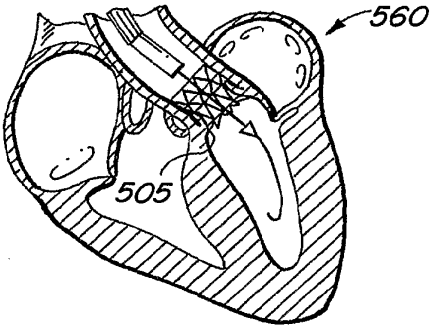

Fig. 20F

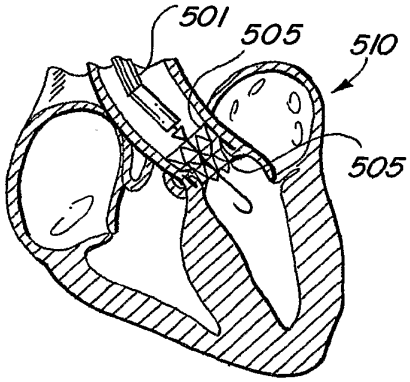

Fig. 20G

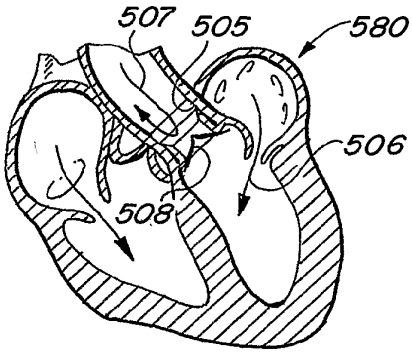

Fig. 20H

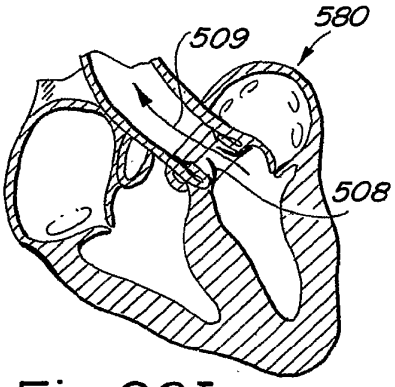

Fig. 20I

Electronic Patent Application Fee Transmittal

Application Number:	16808137
Filing Date:	03-Mar-2020
Title of Invention:	HEART VALVE REPLACEMENT DEVICE FOR ENDOVASCULAR AORTIC REPAIR AND METHOD OF USING THE SAME
First Named Inventor/Applicant Name:	Ali Shahriari
Filer:	Justin Robert Nifong
Attorney Docket Number:	426/2/9 UTIL

Filed as Small Entity

Filing Fees for Utility under 35 USC 111(a)

Description	Fee Code	Quantity	Amount	Sub-Total in USD($)
Basic Filing:				
Pages:				
Claims:				
Miscellaneous-Filing:				
Petition:				
Patent-Appeals-and-Interference:				
Post-Allowance-and-Post-Issuance:				
Extension-of-Time:				

Description	Fee Code	Quantity	Amount	Sub-Total in USD($)
Miscellaneous:				
SUBMISSION- INFORMATION DISCLOSURE STMT	2806	1	120	120
		Total in USD ($)		**120**

Electronic Acknowledgement Receipt	
EFS ID:	40483838
Application Number:	16808137
International Application Number:	
Confirmation Number:	1706
Title of Invention:	HEART VALVE REPLACEMENT DEVICE FOR ENDOVASCULAR AORTIC REPAIR AND METHOD OF USING THE SAME
First Named Inventor/Applicant Name:	Ali Shahriari
Customer Number:	115007
Filer:	Justin Robert Nifong
Filer Authorized By:	
Attorney Docket Number:	426/2/9 UTIL
Receipt Date:	05-SEP-2020
Filing Date:	03-MAR-2020
Time Stamp:	08:59:55
Application Type:	Utility under 35 USC 111(a)

Payment information:

Submitted with Payment	yes
Payment Type	CARD
Payment was successfully received in RAM	$120
RAM confirmation Number	E202095000291889
Deposit Account	506191
Authorized User	Justin Nifong
The Director of the USPTO is hereby authorized to charge indicated fees and credit any overpayment as follows: 37 CFR 1.16 (National application filing, search, and examination fees) 37 CFR 1.17 (Patent application and reexamination processing fees)	

37 CFR 1.19 (Document supply fees)

37 CFR 1.20 (Post Issuance fees)

37 CFR 1.21 (Miscellaneous fees and charges)

File Listing:

Document Number	Document Description	File Name	File Size(Bytes)/ Message Digest	Multi Part /.zip	Pages (if appl.)
1	Information Disclosure Statement (IDS) Form (SB08)	426-2-9-ids-dtd-9-5.pdf	1034445 32e1d44e80f17c8d4642f0119ceae267360668b4	no	4
Warnings:					
Information:					
2	Non Patent Literature	16910189npl.pdf	260755 816a88dea13d2d274c3f8554cec7eb3cd2d9c529	no	7
Warnings:					
Information:					
3	Non Patent Literature	WO2004032987A1.pdf	3605799 f7083fed9aeb4e69bf38a0ecc7e5a6dd8055eda0	no	75
Warnings:					
Information:					
4	Non Patent Literature	WO2001049213A2.pdf	2006050 e859e57b0ba1c563e7ee08fa17bcfd9c4e30dac3	no	42
Warnings:					
Information:					
5	Fee Worksheet (SB06)	fee-info.pdf	30531 1cd7460701f133b282c556314085faa19331c65d	no	2
Warnings:					
Information:					
			Total Files Size (in bytes):	6937580	

This Acknowledgement Receipt evidences receipt on the noted date by the USPTO of the indicated documents, characterized by the applicant, and including page counts, where applicable. It serves as evidence of receipt similar to a Post Card, as described in MPEP 503.

New Applications Under 35 U.S.C. 111
If a new application is being filed and the application includes the necessary components for a filing date (see 37 CFR 1.53(b)-(d) and MPEP 506), a Filing Receipt (37 CFR 1.54) will be issued in due course and the date shown on this Acknowledgement Receipt will establish the filing date of the application.
National Stage of an International Application under 35 U.S.C. 371
If a timely submission to enter the national stage of an international application is compliant with the conditions of 35 U.S.C. 371 and other applicable requirements a Form PCT/DO/EO/903 indicating acceptance of the application as a national stage submission under 35 U.S.C. 371 will be issued in addition to the Filing Receipt, in due course.
New International Application Filed with the USPTO as a Receiving Office
If a new international application is being filed and the international application includes the necessary components for an international filing date (see PCT Article 11 and MPEP 1810), a Notification of the International Application Number and of the International Filing Date (Form PCT/RO/105) will be issued in due course, subject to prescriptions concerning national security, and the date shown on this Acknowledgement Receipt will establish the international filing date of the application.

PTO/SB/08a (02-18)
Approved for use through 11/30/2020. OMB 0651-0031
U.S. Patent and Trademark Office; U.S. DEPARTMENT OF COMMERCE
Under the Paperwork Reduction Act of 1995, no persons are required to respond to a collection of information unless it contains a valid OMB control number.

INFORMATION DISCLOSURE STATEMENT BY APPLICANT

(Not for submission under 37 CFR 1.99)

Application Number	16808137
Filing Date	2020-03-03
First Named Inventor	Ali Shahriari
Art Unit	3774
Examiner Name	Tiffany P. Shipmon
Attorney Docket Number	426/2/9 UTIL

U.S.PATENTS Remove

Examiner Initial*	Cite No	Patent Number	Kind Code[1]	Issue Date	Name of Patentee or Applicant of cited Document	Pages,Columns,Lines where Relevant Passages or Relevant Figures Appear
	1					

If you wish to add additional U.S. Patent citation information please click the Add button. Add

U.S.PATENT APPLICATION PUBLICATIONS Remove

Examiner Initial*	Cite No	Publication Number	Kind Code[1]	Publication Date	Name of Patentee or Applicant of cited Document	Pages,Columns,Lines where Relevant Passages or Relevant Figures Appear
	1					

If you wish to add additional U.S. Published Application citation information please click the Add button. Add

FOREIGN PATENT DOCUMENTS Remove

Examiner Initial*	Cite No	Foreign Document Number[3]	Country Code[2] i	Kind Code[4]	Publication Date	Name of Patentee or Applicant of cited Document	Pages,Columns,Lines where Relevant Passages or Relevant Figures Appear	T[5]
	1							

If you wish to add additional Foreign Patent Document citation information please click the Add button Add

NON-PATENT LITERATURE DOCUMENTS Remove

Examiner Initials*	Cite No	Include name of the author (in CAPITAL LETTERS), title of the article (when appropriate), title of the item (book, magazine, journal, serial, symposium, catalog, etc), date, pages(s), volume-issue number(s), publisher, city and/or country where published.	T[5]

INFORMATION DISCLOSURE STATEMENT BY APPLICANT (Not for submission under 37 CFR 1.99)		
	Application Number	16808137
	Filing Date	2020-03-03
	First Named Inventor	Ali Shahriari
	Art Unit	3774
	Examiner Name	Tiffany P. Shipmon
	Attorney Docket Number	426/2/9 UTIL

	1	EPO, Extended European Search Report for Application No. 20172681.7 dated 14 July 2020	

If you wish to add additional non-patent literature document citation information please click the Add button Add

EXAMINER SIGNATURE

Examiner Signature		Date Considered	

*EXAMINER: Initial if reference considered, whether or not citation is in conformance with MPEP 609. Draw line through a citation if not in conformance and not considered. Include copy of this form with next communication to applicant.

[1] See Kind Codes of USPTO Patent Documents at www.USPTO.GOV or MPEP 901.04. [2] Enter office that issued the document, by the two-letter code (WIPO Standard ST.3). [3] For Japanese patent documents, the indication of the year of the reign of the Emperor must precede the serial number of the patent document. [4] Kind of document by the appropriate symbols as indicated on the document under WIPO Standard ST.16 if possible. [5] Applicant is to place a check mark here if English language translation is attached.

INFORMATION DISCLOSURE STATEMENT BY APPLICANT (Not for submission under 37 CFR 1.99)	Application Number	16808137
	Filing Date	2020-03-03
	First Named Inventor	Ali Shahriari
	Art Unit	3774
	Examiner Name	Tiffany P. Shipmon
	Attorney Docket Number	426/2/9 UTIL

CERTIFICATION STATEMENT

Please see 37 CFR 1.97 and 1.98 to make the appropriate selection(s):

☒ That each item of information contained in the information disclosure statement was first cited in any communication from a foreign patent office in a counterpart foreign application not more than three months prior to the filing of the information disclosure statement. See 37 CFR 1.97(e)(1).

OR

☐ That no item of information contained in the information disclosure statement was cited in a communication from a foreign patent office in a counterpart foreign application, and, to the knowledge of the person signing the certification after making reasonable inquiry, no item of information contained in the information disclosure statement was known to any individual designated in 37 CFR 1.56(c) more than three months prior to the filing of the information disclosure statement. See 37 CFR 1.97(e)(2).

See attached certification statement.

The fee set forth in 37 CFR 1.17 (p) has been submitted herewith.

A certification statement is not submitted herewith.

SIGNATURE

A signature of the applicant or representative is required in accordance with CFR 1.33, 10.18. Please see CFR 1.4(d) for the form of the signature.

Signature	/Justin R. Nifong/	Date (YYYY-MM-DD)	2020-07-09
Name/Print	Justin R. Nifong	Registration Number	59389

This collection of information is required by 37 CFR 1.97 and 1.98. The information is required to obtain or retain a benefit by the public which is to file (and by the USPTO to process) an application. Confidentiality is governed by 35 U.S.C. 122 and 37 CFR 1.14. This collection is estimated to take 1 hour to complete, including gathering, preparing and submitting the completed application form to the USPTO. Time will vary depending upon the individual case. Any comments on the amount of time you require to complete this form and/or suggestions for reducing this burden, should be sent to the Chief Information Officer, U.S. Patent and Trademark Office, U.S. Department of Commerce, P.O. Box 1450, Alexandria, VA 22313-1450. DO NOT SEND FEES OR COMPLETED FORMS TO THIS ADDRESS. **SEND TO: Commissioner for Patents, P.O. Box 1450, Alexandria, VA 22313-1450.**

Privacy Act Statement

The Privacy Act of 1974 (P.L. 93-579) requires that you be given certain information in connection with your submission of the attached form related to a patent application or patent. Accordingly, pursuant to the requirements of the Act, please be advised that: (1) the general authority for the collection of this information is 35 U.S.C. 2(b)(2); (2) furnishing of the information solicited is voluntary; and (3) the principal purpose for which the information is used by the U.S. Patent and Trademark Office is to process and/or examine your submission related to a patent application or patent. If you do not furnish the requested information, the U.S. Patent and Trademark Office may not be able to process and/or examine your submission, which may result in termination of proceedings or abandonment of the application or expiration of the patent.

The information provided by you in this form will be subject to the following routine uses:

1. The information on this form will be treated confidentially to the extent allowed under the Freedom of Information Act (5 U.S.C. 552) and the Privacy Act (5 U.S.C. 552a). Records from this system of records may be disclosed to the Department of Justice to determine whether the Freedom of Information Act requires disclosure of these record s.

2. A record from this system of records may be disclosed, as a routine use, in the course of presenting evidence to a court, magistrate, or administrative tribunal, including disclosures to opposing counsel in the course of settlement negotiations.

3. A record in this system of records may be disclosed, as a routine use, to a Member of Congress submitting a request involving an individual, to whom the record pertains, when the individual has requested assistance from the Member with respect to the subject matter of the record.

4. A record in this system of records may be disclosed, as a routine use, to a contractor of the Agency having need for the information in order to perform a contract. Recipients of information shall be required to comply with the requirements of the Privacy Act of 1974, as amended, pursuant to 5 U.S.C. 552a(m).

5. A record related to an International Application filed under the Patent Cooperation Treaty in this system of records may be disclosed, as a routine use, to the International Bureau of the World Intellectual Property Organization, pursuant to the Patent Cooperation Treaty.

6. A record in this system of records may be disclosed, as a routine use, to another federal agency for purposes of National Security review (35 U.S.C. 181) and for review pursuant to the Atomic Energy Act (42 U.S.C. 218(c)).

7. A record from this system of records may be disclosed, as a routine use, to the Administrator, General Services, or his/her designee, during an inspection of records conducted by GSA as part of that agency's responsibility to recommend improvements in records management practices and programs, under authority of 44 U.S.C. 2904 and 2906. Such disclosure shall be made in accordance with the GSA regulations governing inspection of records for this purpose, and any other relevant (i.e., GSA or Commerce) directive. Such disclosure shall not be used to make determinations about individuals.

8. A record from this system of records may be disclosed, as a routine use, to the public after either publication of the application pursuant to 35 U.S.C. 122(b) or issuance of a patent pursuant to 35 U.S.C. 151. Further, a record may be disclosed, subject to the limitations of 37 CFR 1.14, as a routine use, to the public if the record was filed in an application which became abandoned or in which the proceedings were terminated and which application is referenced by either a published application, an application open to public inspections or an issued patent.

9. A record from this system of records may be disclosed, as a routine use, to a Federal, State, or local law enforcement agency, if the USPTO becomes aware of a violation or potential violation of law or regulation.

Electronic Acknowledgement Receipt

EFS ID:	39956872
Application Number:	16808137
International Application Number:	
Confirmation Number:	1706
Title of Invention:	HEART VALVE REPLACEMENT DEVICE FOR ENDOVASCULAR AORTIC REPAIR AND METHOD OF USING THE SAME
First Named Inventor/Applicant Name:	Ali Shahriari
Customer Number:	115007
Filer:	Justin Robert Nifong/Donna Donovan
Filer Authorized By:	Justin Robert Nifong
Attorney Docket Number:	426/2/9 UTIL
Receipt Date:	09-JUL-2020
Filing Date:	03-MAR-2020
Time Stamp:	14:47:34
Application Type:	Utility under 35 USC 111(a)

Payment information:

Submitted with Payment	no

File Listing:

Document Number	Document Description	File Name	File Size(Bytes)/ Message Digest	Multi Part /.zip	Pages (if appl.)
1	Information Disclosure Statement (IDS) Form (SB08)	426-2-9UTIL-20200709-IDS.pdf	1034306 04229f048c7643e4ad0c3f60d43a42beaddd f840	no	4

Warnings:

Information:					
A U.S. Patent Number Citation or a U.S. Publication Number Citation is required in the Information Disclosure Statement (IDS) form for autoloading of data into USPTO systems. You may remove the form to add the required data in order to correct the Informational Message if you are citing U.S. References. If you chose not to include U.S. References, the image of the form will be processed and be made available within the Image File Wrapper (IFW) system. However, no data will be extracted from this form. Any additional data such as Foreign Patent Documents or Non Patent Literature will be manually reviewed and keyed into USPTO systems.					
2	Non Patent Literature	NPL1-EP-SearchReport-20200714.PDF	217022 f8f07967fb1a575c747b7270409cc10e319fafe6	no	7
Warnings:					
Information:					
			Total Files Size (in bytes):	1251328	

This Acknowledgement Receipt evidences receipt on the noted date by the USPTO of the indicated documents, characterized by the applicant, and including page counts, where applicable. It serves as evidence of receipt similar to a Post Card, as described in MPEP 503.

<u>New Applications Under 35 U.S.C. 111</u>
If a new application is being filed and the application includes the necessary components for a filing date (see 37 CFR 1.53(b)-(d) and MPEP 506), a Filing Receipt (37 CFR 1.54) will be issued in due course and the date shown on this Acknowledgement Receipt will establish the filing date of the application.
<u>National Stage of an International Application under 35 U.S.C. 371</u>
If a timely submission to enter the national stage of an international application is compliant with the conditions of 35 U.S.C. 371 and other applicable requirements a Form PCT/DO/EO/903 indicating acceptance of the application as a national stage submission under 35 U.S.C. 371 will be issued in addition to the Filing Receipt, in due course.
<u>New International Application Filed with the USPTO as a Receiving Office</u>
If a new international application is being filed and the international application includes the necessary components for an international filing date (see PCT Article 11 and MPEP 1810), a Notification of the International Application Number and of the International Filing Date (Form PCT/RO/105) will be issued in due course, subject to prescriptions concerning national security, and the date shown on this Acknowledgement Receipt will establish the international filing date of the application.

INFORMATION DISCLOSURE STATEMENT BY APPLICANT (Not for submission under 37 CFR 1.99)		
	Application Number	16808137
	Filing Date	2020-03-03
	First Named Inventor	Ali Shahriari
	Art Unit	-
	Examiner Name	-
	Attorney Docket Number	426/2/9 UTIL

	34	20130144373	A1	2013-06-06	SHAHRIARI	
	35	20070203559	A1	2007-08-30	FREUDENTHAL	
	36	20050043790	A1	2005-02-24	SEGUIN	
	37	20010044650	A1	2001-11-22	Simso Eric J. et al.	
	38	20020082684	A1	2002-06-27	Mishaly	
	39	20040249399	A1	2004-12-09	Cinquin et al.	
	40	20070219613	A1	2007-09-20	Kao et al.	
	41	20090036977	A1	2009-02-05	Rassat et al.	
	42	20090099650	A1	2009-04-16	Bolduc et al.	
	43	20100087907	A1	2010-04-08	Lattouf	
	44	20130013050	A1	2013-01-10	Shalev et al.	

Change(s) applied to document. /MHE/ 6/25/2020

EFS Web 2.1.18

ALL REFERENCES CONSIDERED EXCEPT WHERE LINED THROUGH. /T.P.S/

INFORMATION DISCLOSURE STATEMENT BY APPLICANT (Not for submission under 37 CFR 1.99)		
	Application Number	16808137
	Filing Date	2020-03-03
	First Named Inventor	Ali Shahriari
	Art Unit	-
	Examiner Name	-
	Attorney Docket Number	426/2/9 UTIL

Change(s) applied to document, /M.H.E./ 6/25/2020	53	7294146	B2	~~2005-07-19~~ 11/2007	~~TEHRANI~~ Chew et al.	
	54	8021408	B2	2011-09-20	KANG et al.	
	55	8603156	B2	2013-12-10	HARTLEY et al.	
	56	8864808	B2	2014-10-21	GREENBERG et al.	
	57	9269739	B2	2016-02-23	MOLLARD et al.	
	58	9561102	B2	2017-02-07	RUST et al.	
	59	9629739	B2	2017-04-25	SLAZAS et al.	
	60	5976179	A	1999-11-02	INOUE	
	61	8940040	B2	2015-01-27	SHAHRIARI	
	62	10028848	B2	2018-07-24	SHAHRIARI	
	63	9833341	B2	2017-12-05	BOGENSCHUETZ et al.	

UNITED STATES PATENT AND TRADEMARK OFFICE

UNITED STATES DEPARTMENT OF COMMERCE
United States Patent and Trademark Office
Address: COMMISSIONER FOR PATENTS
P.O. Box 1450
Alexandria, Virginia 22313-1450
www.uspto.gov

APPLICATION NUMBER	FILING OR 371(C) DATE	FIRST NAMED APPLICANT	ATTY. DOCKET NO./TITLE
16/808,137	03/03/2020	Ali Shahriari	426/2/9 UTIL

CONFIRMATION NO. 1706

POA ACCEPTANCE LETTER

115007
NK Patent Law
4917 Waters Edge Dr.
Suite 275
Raleigh, NC 27606

OC000000117949612

Date Mailed: 06/25/2020

NOTICE OF ACCEPTANCE OF POWER OF ATTORNEY

This is in response to the Power of Attorney filed 06/22/2020.

The Power of Attorney in this application is accepted. Correspondence in this application will be mailed to the above address as provided by 37 CFR 1.33.

Questions about the contents of this notice and the requirements it sets forth should be directed to the Office of Data Management, Application Assistance Unit, at **(571) 272-4000** or **(571) 272-4200** or **1-888-786-0101**.

/sleutchit/

UNITED STATES PATENT AND TRADEMARK OFFICE

UNITED STATES DEPARTMENT OF COMMERCE
United States Patent and Trademark Office
Address: COMMISSIONER FOR PATENTS
P.O. Box 1450
Alexandria, Virginia 22313-1450
www.uspto.gov

APPLICATION NUMBER	FILING OR 371(C) DATE	FIRST NAMED APPLICANT	ATTY. DOCKET NO./TITLE
16/808,137	03/03/2020	Ali Shahriari	426/2/9 UTIL

CONFIRMATION NO. 1706

PUBLICATION NOTICE

OC000000118010395

115007
NK Patent Law
4917 Waters Edge Dr.
Suite 275
Raleigh, NC 27606

Title:HEART VALVE REPLACEMENT DEVICE FOR ENDOVASCULAR AORTIC REPAIR AND METHOD OF USING THE SAME

Publication No.US-2020-0197199-A1
Publication Date:06/25/2020

NOTICE OF PUBLICATION OF APPLICATION

The above-identified application will be electronically published as a patent application publication pursuant to 37 CFR 1.211, et seq. The patent application publication number and publication date are set forth above.

The publication may be accessed through the USPTO's publically available Searchable Databases via the Internet at www.uspto.gov. The direct link to access the publication is currently http://www.uspto.gov/patft/.

The publication process established by the Office does not provide for mailing a copy of the publication to applicant. A copy of the publication may be obtained from the Office upon payment of the appropriate fee set forth in 37 CFR 1.19(a)(1). Orders for copies of patent application publications are handled by the USPTO's Public Records Division. The Public Records Division can be reached by telephone at (571) 272-3150 or (800) 972-6382, by facsimile at (571) 273-3250, by mail addressed to the United States Patent and Trademark Office, Public Records Division, Alexandria, VA 22313-1450 or via the Internet.

In addition, information on the status of the application, including the mailing date of Office actions and the dates of receipt of correspondence filed in the Office, may also be accessed via the Internet through the Patent Electronic Business Center at www.uspto.gov using the public side of the Patent Application Information and Retrieval (PAIR) system. The direct link to access this status information is currently https://portal.uspto.gov/pair/PublicPair. Prior to publication, such status information is confidential and may only be obtained by applicant using the private side of PAIR.

Further assistance in electronically accessing the publication, or about PAIR, is available by calling the Patent Electronic Business Center at 1-866-217-9197.

Office of Data Managment, Application Assistance Unit (571) 272-4000, or (571) 272-4200, or 1-888-786-0101

UNITED STATES PATENT AND TRADEMARK OFFICE

UNITED STATES DEPARTMENT OF COMMERCE
United States Patent and Trademark Office
Address: COMMISSIONER FOR PATENTS
P.O. Box 1450
Alexandria, Virginia 22313-1450
www.uspto.gov

APPLICATION NUMBER	FILING or 371(c) DATE	GRP ART UNIT	FIL FEE REC'D	ATTY.DOCKET.NO	TOT CLAIMS	IND CLAIMS
16/808,137	03/03/2020	3774	785	426/2/9 UTIL	10	2

CONFIRMATION NO. 1706

CORRECTED FILING RECEIPT

115007
NK Patent Law
4917 Waters Edge Dr.
Suite 275
Raleigh, NC 27606

Date Mailed: 06/22/2020

Receipt is acknowledged of this non-provisional utility patent application. The application will be taken up for examination in due course. Applicant will be notified as to the results of the examination. Any correspondence concerning the application must include the following identification information: the U.S. APPLICATION NUMBER, FILING DATE, NAME OF FIRST INVENTOR, and TITLE OF INVENTION. Fees transmitted by check or draft are subject to collection.

Please verify the accuracy of the data presented on this receipt. If an error is noted on this Filing Receipt, please submit a written request for a corrected Filing Receipt, including a properly marked-up ADS showing the changes with strike-through for deletions and underlining for additions. If you received a "Notice to File Missing Parts" or other Notice requiring a response for this application, please submit any request for correction to this Filing Receipt with your reply to the Notice. When the USPTO processes the reply to the Notice, the USPTO will generate another Filing Receipt incorporating the requested corrections provided that the request is grantable.

Inventor(s)

Ali Shahriari, Boca Raton, FL;

Applicant(s)

Aortic Innovations, LLC, Boca Raton, FL;

Power of Attorney: None

Domestic Priority data as claimed by applicant

This application is a CON of 16/736,879 01/08/2020
which is a CON of 16/042,286 07/23/2018 PAT 10555823
which is a CON of 14/614,628 02/05/2015 PAT 10028848
which is a CON of 14/569,306 12/12/2014 PAT 9339399
which is a DIV of 13/706,896 12/06/2012 PAT 8940040
which claims benefit of 61/723,446 11/07/2012
and claims benefit of 61/567,458 12/06/2011

Foreign Applications for which priority is claimed (You may be eligible to benefit from the **Patent Prosecution Highway** program at the USPTO. Please see http://www.uspto.gov for more information.) - None.
Foreign application information must be provided in an Application Data Sheet in order to constitute a claim to foreign priority. See 37 CFR 1.55 and 1.76.

Permission to Access Application via Priority Document Exchange: Yes

Permission to Access Search Results: Yes

Applicant may provide or rescind an authorization for access using Form PTO/SB/39 or Form PTO/SB/69 as appropriate.

If Required, Foreign Filing License Granted: 03/17/2020

The country code and number of your priority application, to be used for filing abroad under the Paris Convention, is **US 16/808,137**

Projected Publication Date: 06/25/2020

Non-Publication Request: No

Early Publication Request: No
**** SMALL ENTITY ****
Title

HEART VALVE REPLACEMENT DEVICE FOR ENDOVASCULAR AORTIC REPAIR AND METHOD OF USING THE SAME

Preliminary Class

623

Statement under 37 CFR 1.55 or 1.78 for AIA (First Inventor to File) Transition Applications: No

PROTECTING YOUR INVENTION OUTSIDE THE UNITED STATES

Since the rights granted by a U.S. patent extend only throughout the territory of the United States and have no effect in a foreign country, an inventor who wishes patent protection in another country must apply for a patent in a specific country or in regional patent offices. Applicants may wish to consider the filing of an international application under the Patent Cooperation Treaty (PCT). An international (PCT) application generally has the same effect as a regular national patent application in each PCT-member country. The PCT process **simplifies** the filing of patent applications on the same invention in member countries, but **does not result** in a grant of "an international patent" and does not eliminate the need of applicants to file additional documents and fees in countries where patent protection is desired.

Almost every country has its own patent law, and a person desiring a patent in a particular country must make an application for patent in that country in accordance with its particular laws. Since the laws of many countries differ in various respects from the patent law of the United States, applicants are advised to seek guidance from specific foreign countries to ensure that patent rights are not lost prematurely.

Applicants also are advised that in the case of inventions made in the United States, the Director of the USPTO must issue a license before applicants can apply for a patent in a foreign country. The filing of a U.S. patent application serves as a request for a foreign filing license. The application's filing receipt contains further information and guidance as to the status of applicant's license for foreign filing.

Applicants may wish to consult the USPTO booklet, "General Information Concerning Patents" (specifically, the section entitled "Treaties and Foreign Patents") for more information on timeframes and deadlines for filing foreign patent applications. The guide is available either by contacting the USPTO Contact Center at 800-786-9199, or it can be viewed on the USPTO website at http://www.uspto.gov/web/offices/pac/doc/general/index.html.

For information on preventing theft of your intellectual property (patents, trademarks and copyrights), you may wish to consult the U.S. Government website, http://www.stopfakes.gov. Part of a Department of Commerce initiative, this website includes self-help "toolkits" giving innovators guidance on how to protect intellectual property in specific countries such as China, Korea and Mexico. For questions regarding patent enforcement issues, applicants may call the U.S. Government hotline at 1-866-999-HALT (1-866-999-4258).

LICENSE FOR FOREIGN FILING UNDER

Title 35, United States Code, Section 184

Title 37, Code of Federal Regulations, 5.11 & 5.15

GRANTED

The applicant has been granted a license under 35 U.S.C. 184, if the phrase "IF REQUIRED, FOREIGN FILING LICENSE GRANTED" followed by a date appears on this form. Such licenses are issued in all applications where the conditions for issuance of a license have been met, regardless of whether or not a license may be required as set forth in 37 CFR 5.15. The scope and limitations of this license are set forth in 37 CFR 5.15(a) unless an earlier license has been issued under 37 CFR 5.15(b). The license is subject to revocation upon written notification. The date indicated is the effective date of the license, unless an earlier license of similar scope has been granted under 37 CFR 5.13 or 5.14.

This license is to be retained by the licensee and may be used at any time on or after the effective date thereof unless it is revoked. This license is automatically transferred to any related applications(s) filed under 37 CFR 1.53(d). This license is not retroactive.

The grant of a license does not in any way lessen the responsibility of a licensee for the security of the subject matter as imposed by any Government contract or the provisions of existing laws relating to espionage and the national security or the export of technical data. Licensees should apprise themselves of current regulations especially with respect to certain countries, of other agencies, particularly the Office of Defense Trade Controls, Department of State (with respect to Arms, Munitions and Implements of War (22 CFR 121-128)); the Bureau of Industry and Security, Department of Commerce (15 CFR parts 730-774); the Office of Foreign AssetsControl, Department of Treasury (31 CFR Parts 500+) and the Department of Energy.

NOT GRANTED

No license under 35 U.S.C. 184 has been granted at this time, if the phrase "IF REQUIRED, FOREIGN FILING LICENSE GRANTED" DOES NOT appear on this form. Applicant may still petition for a license under 37 CFR 5.12, if a license is desired before the expiration of 6 months from the filing date of the application. If 6 months has lapsed from the filing date of this application and the licensee has not received any indication of a secrecy order under 35 U.S.C. 181, the licensee may foreign file the application pursuant to 37 CFR 5.15(b).

SelectUSA

The United States represents the largest, most dynamic marketplace in the world and is an unparalleled location for business investment, innovation, and commercialization of new technologies. The U.S. offers tremendous resources and advantages for those who invest and manufacture goods here. Through SelectUSA, our nation works to promote and facilitate business investment. SelectUSA provides information assistance to the international investor

community; serves as an ombudsman for existing and potential investors; advocates on behalf of U.S. cities, states, and regions competing for global investment; and counsels U.S. economic development organizations on investment attraction best practices. To learn more about why the United States is the best country in the world to develop technology, manufacture products, deliver services, and grow your business, visit http://www.SelectUSA.gov or call +1-202-482-6800.

POWER OF ATTORNEY FOR PATENT APPLICATIONS

Under 37 CFR § 3.73(b) and/or (c), Aortic Innovations, LLC, hereby certifies that it is the Assignee of the entire right, title, and interest in and to the patent applications listed below. Each of the patent applications listed below is assigned to Aortic Innovations, LLC. As required by 37 CFR § 3.73(b)(1)(i) and/or (c)(1)(i), the documentary evidence of the chain of title from the original owner to the Assignee was submitted for recordation pursuant to 37 § CFR 3.11 as shown in the Reel/Frame numbers listed below.

Title	Serial No.	Filing Date	Assignment	Date
Transcathetor Arotic Valve for Endovascular Aortic Repair	61/723,446	11/7/2012	029574/0731	1/7/2013
Transcathetor Aortic Valve for Endovascular Aortic Repair	61/567,458	12/6/2011	029005/0233	9/19/2012
Branched Aortic Graft and Method of Using the Same	61/777,918	3/12/2013	030346/0253	5/3/2013
Device for Endovascular Aortic Repair and Method of Using the Same	13/706,896	12/6/2012	032145/0686	2/5/2014
Device for Endovascular Aortic Repair and Method of Using the Same	US2012/068165	12/6/2012	029574/0887	1/7/2013
Transcatheral Mitral Valve and Delivery System	61/780,242	3/13/2013	030346/0233	5/3/2013
Device for Transcatheter Mitral Valve Repair and Replacement	61/817,118	4/29/2013	032145/0686	2/5/2014

The undersigned, acting as the Assignee, hereby revokes all prior powers of attorney, if applicable, and appoints the practitioners associated with the customer number 115007 as my/our attorney(s) or agent(s) to prosecute the patent(s) and/or patent application(s) and transact all business in the United States Patent and Trademark Office connected therewith.

By: _____ Date: 2/4/14

Ali Shahriari, Owner

Aortic Innovations, LLC

1

Electronic Acknowledgement Receipt

EFS ID:	39781633
Application Number:	16808137
International Application Number:	
Confirmation Number:	1706
Title of Invention:	HEART VALVE REPLACEMENT DEVICE FOR ENDOVASCULAR AORTIC REPAIR AND METHOD OF USING THE SAME
First Named Inventor/Applicant Name:	Ali Shahriari
Customer Number:	115007
Filer:	Justin Robert Nifong
Filer Authorized By:	
Attorney Docket Number:	426/2/9 UTIL
Receipt Date:	22-JUN-2020
Filing Date:	03-MAR-2020
Time Stamp:	07:25:16
Application Type:	Utility under 35 USC 111(a)

Payment information:

Submitted with Payment	no

File Listing:

Document Number	Document Description	File Name	File Size(Bytes)/ Message Digest	Multi Part /.zip	Pages (if appl.)
1	Power of Attorney	426-poa.pdf	75968 79af9798b41c127ebd664dcbd9f2f1bad2ca87a6	no	1

Warnings:

Information:	
Total Files Size (in bytes):	75968

This Acknowledgement Receipt evidences receipt on the noted date by the USPTO of the indicated documents, characterized by the applicant, and including page counts, where applicable. It serves as evidence of receipt similar to a Post Card, as described in MPEP 503.

New Applications Under 35 U.S.C. 111
If a new application is being filed and the application includes the necessary components for a filing date (see 37 CFR 1.53(b)-(d) and MPEP 506), a Filing Receipt (37 CFR 1.54) will be issued in due course and the date shown on this Acknowledgement Receipt will establish the filing date of the application.
National Stage of an International Application under 35 U.S.C. 371
If a timely submission to enter the national stage of an international application is compliant with the conditions of 35 U.S.C. 371 and other applicable requirements a Form PCT/DO/EO/903 indicating acceptance of the application as a national stage submission under 35 U.S.C. 371 will be issued in addition to the Filing Receipt, in due course.
New International Application Filed with the USPTO as a Receiving Office
If a new international application is being filed and the international application includes the necessary components for an international filing date (see PCT Article 11 and MPEP 1810), a Notification of the International Application Number and of the International Filing Date (Form PCT/RO/105) will be issued in due course, subject to prescriptions concerning national security, and the date shown on this Acknowledgement Receipt will establish the international filing date of the application.

UNITED STATES PATENT AND TRADEMARK OFFICE

UNITED STATES DEPARTMENT OF COMMERCE
United States Patent and Trademark Office
Address: COMMISSIONER FOR PATENTS
P.O. Box 1450
Alexandria, Virginia 22313-1450
www.uspto.gov

NOTICE OF ALLOWANCE AND FEE(S) DUE

115007 7590 06/18/2020
NK Patent Law
4917 Waters Edge Dr.
Suite 275
Raleigh, NC 27606

EXAMINER
SHIPMON, TIFFANY P

ART UNIT	PAPER NUMBER
3774	

DATE MAILED: 06/18/2020

APPLICATION NO.	FILING DATE	FIRST NAMED INVENTOR	ATTORNEY DOCKET NO.	CONFIRMATION NO.
16/808,137	03/03/2020	Ali Shahriari	426/2/9 UTIL	1706

TITLE OF INVENTION: DEVICE FOR ENDOVASCULAR AORTIC REPAIR AND METHOD OF USING THE SAME

APPLN. TYPE	ENTITY STATUS	ISSUE FEE DUE	PUBLICATION FEE DUE	PREV. PAID ISSUE FEE	TOTAL FEE(S) DUE	DATE DUE
nonprovisional	SMALL	$500	$0.00	$0.00	$500	09/18/2020

THE APPLICATION IDENTIFIED ABOVE HAS BEEN EXAMINED AND IS ALLOWED FOR ISSUANCE AS A PATENT. PROSECUTION ON THE MERITS IS CLOSED. THIS NOTICE OF ALLOWANCE IS NOT A GRANT OF PATENT RIGHTS. THIS APPLICATION IS SUBJECT TO WITHDRAWAL FROM ISSUE AT THE INITIATIVE OF THE OFFICE OR UPON PETITION BY THE APPLICANT. SEE 37 CFR 1.313 AND MPEP 1308.

THE ISSUE FEE AND PUBLICATION FEE (IF REQUIRED) MUST BE PAID WITHIN THREE MONTHS FROM THE MAILING DATE OF THIS NOTICE OR THIS APPLICATION SHALL BE REGARDED AS ABANDONED. THIS STATUTORY PERIOD CANNOT BE EXTENDED. SEE 35 U.S.C. 151. THE ISSUE FEE DUE INDICATED ABOVE DOES NOT REFLECT A CREDIT FOR ANY PREVIOUSLY PAID ISSUE FEE IN THIS APPLICATION. IF AN ISSUE FEE HAS PREVIOUSLY BEEN PAID IN THIS APPLICATION (AS SHOWN ABOVE), THE RETURN OF PART B OF THIS FORM WILL BE CONSIDERED A REQUEST TO REAPPLY THE PREVIOUSLY PAID ISSUE FEE TOWARD THE ISSUE FEE NOW DUE.

HOW TO REPLY TO THIS NOTICE:

I. Review the ENTITY STATUS shown above. If the ENTITY STATUS is shown as SMALL or MICRO, verify whether entitlement to that entity status still applies.

If the ENTITY STATUS is the same as shown above, pay the TOTAL FEE(S) DUE shown above.

If the ENTITY STATUS is changed from that shown above, on PART B - FEE(S) TRANSMITTAL, complete section number 5 titled "Change in Entity Status (from status indicated above)".

For purposes of this notice, small entity fees are 1/2 the amount of undiscounted fees, and micro entity fees are 1/2 the amount of small entity fees.

II. PART B - FEE(S) TRANSMITTAL, or its equivalent, must be completed and returned to the United States Patent and Trademark Office (USPTO) with your ISSUE FEE and PUBLICATION FEE (if required). If you are charging the fee(s) to your deposit account, section "4b" of Part B - Fee(s) Transmittal should be completed and an extra copy of the form should be submitted. If an equivalent of Part B is filed, a request to reapply a previously paid issue fee must be clearly made, and delays in processing may occur due to the difficulty in recognizing the paper as an equivalent of Part B.

III. All communications regarding this application must give the application number. Please direct all communications prior to issuance to Mail Stop ISSUE FEE unless advised to the contrary.

IMPORTANT REMINDER: Maintenance fees are due in utility patents issuing on applications filed on or after Dec. 12, 1980. It is patentee's responsibility to ensure timely payment of maintenance fees when due. More information is available at www.uspto.gov/PatentMaintenanceFees.

PART B - FEE(S) TRANSMITTAL

Complete and send this form, together with applicable fee(s), by mail or fax, or via EFS-Web.

By mail, send to: Mail Stop ISSUE FEE
Commissioner for Patents
P.O. Box 1450
Alexandria, Virginia 22313-1450

By fax, send to: (571)-273-2885

INSTRUCTIONS: This form should be used for transmitting the ISSUE FEE and PUBLICATION FEE (if required). Blocks 1 through 5 should be completed where appropriate. All further correspondence including the Patent, advance orders and notification of maintenance fees will be mailed to the current correspondence address as indicated unless corrected below or directed otherwise in Block 1, by (a) specifying a new correspondence address; and/or (b) indicating a separate "FEE ADDRESS" for maintenance fee notifications.

CURRENT CORRESPONDENCE ADDRESS (Note: Use Block 1 for any change of address)

115007 7590 06/18/2020
NK Patent Law
4917 Waters Edge Dr.
Suite 275
Raleigh, NC 27606

Note: A certificate of mailing can only be used for domestic mailings of the Fee(s) Transmittal. This certificate cannot be used for any other accompanying papers. Each additional paper, such as an assignment or formal drawing, must have its own certificate of mailing or transmission.

Certificate of Mailing or Transmission

I hereby certify that this Fee(s) Transmittal is being deposited with the United States Postal Service with sufficient postage for first class mail in an envelope addressed to the Mail Stop ISSUE FEE address above, or being transmitted to the USPTO via EFS-Web or by facsimile to (571) 273-2885, on the date below.

(Typed or printed name)

(Signature)

(Date)

APPLICATION NO.	FILING DATE	FIRST NAMED INVENTOR	ATTORNEY DOCKET NO.	CONFIRMATION NO.
16/808,137	03/03/2020	Ali Shahriari	426/2/9 UTIL	1706

TITLE OF INVENTION: DEVICE FOR ENDOVASCULAR AORTIC REPAIR AND METHOD OF USING THE SAME

APPLN. TYPE	ENTITY STATUS	ISSUE FEE DUE	PUBLICATION FEE DUE	PREV. PAID ISSUE FEE	TOTAL FEE(S) DUE	DATE DUE
nonprovisional	SMALL	$500	$0.00	$0.00	$500	09/18/2020

EXAMINER	ART UNIT	CLASS-SUBCLASS
SHIPMON, TIFFANY P	3774	623-001200

1. Change of correspondence address or indication of "Fee Address" (37 CFR 1.363).

❑ Change of correspondence address (or Change of Correspondence Address form PTO/SB/122) attached.

❑ "Fee Address" indication (or "Fee Address" Indication form PTO/SB/47; Rev 03-09 or more recent) attached. **Use of a Customer Number is required.**

2. For printing on the patent front page, list
(1) The names of up to 3 registered patent attorneys or agents OR, alternatively,
(2) The name of a single firm (having as a member a registered attorney or agent) and the names of up to 2 registered patent attorneys or agents. If no name is listed, no name will be printed.

1_____
2_____
3_____

3. ASSIGNEE NAME AND RESIDENCE DATA TO BE PRINTED ON THE PATENT (print or type)

PLEASE NOTE: Unless an assignee is identified below, no assignee data will appear on the patent. If an assignee is identified below, the document must have been previously recorded, or filed for recordation, as set forth in 37 CFR 3.11 and 37 CFR 3.81(a). Completion of this form is NOT a substitute for filing an assignment.

(A) NAME OF ASSIGNEE (B) RESIDENCE: (CITY and STATE OR COUNTRY)

Please check the appropriate assignee category or categories (will not be printed on the patent) : ❑ Individual ❑ Corporation or other private group entity ❑ Government

4a. Fees submitted: ❑Issue Fee ❑Publication Fee (if required) ❑Advance Order - # of Copies _____

4b. Method of Payment: *(Please first reapply any previously paid fee shown above)*

❑ Electronic Payment via EFS-Web ❑ Enclosed check ❑ Non-electronic payment by credit card (Attach form PTO-2038)

❑ The Director is hereby authorized to charge the required fee(s), any deficiency, or credit any overpayment to Deposit Account No. _____

5. **Change in Entity Status** (from status indicated above)

❑ Applicant certifying micro entity status. See 37 CFR 1.29

❑ Applicant asserting small entity status. See 37 CFR 1.27

❑ Applicant changing to regular undiscounted fee status.

NOTE: Absent a valid certification of Micro Entity Status (see forms PTO/SB/15A and 15B), issue fee payment in the micro entity amount will not be accepted at the risk of application abandonment.
NOTE: If the application was previously under micro entity status, checking this box will be taken to be a notification of loss of entitlement to micro entity status.
NOTE: Checking this box will be taken to be a notification of loss of entitlement to small or micro entity status, as applicable.

NOTE: This form must be signed in accordance with 37 CFR 1.31 and 1.33. See 37 CFR 1.4 for signature requirements and certifications.

Authorized Signature _____ Date _____

Typed or printed name _____ Registration No. _____

UNITED STATES PATENT AND TRADEMARK OFFICE

UNITED STATES DEPARTMENT OF COMMERCE
United States Patent and Trademark Office
Address: COMMISSIONER FOR PATENTS
P.O. Box 1450
Alexandria, Virginia 22313-1450
www.uspto.gov

APPLICATION NO.	FILING DATE	FIRST NAMED INVENTOR	ATTORNEY DOCKET NO.	CONFIRMATION NO.
16/808,137	03/03/2020	Ali Shahriari	426/2/9 UTIL	1706

115007 7590 06/18/2020
NK Patent Law
4917 Waters Edge Dr.
Suite 275
Raleigh, NC 27606

EXAMINER
SHIPMON, TIFFANY P

ART UNIT	PAPER NUMBER
3774	

DATE MAILED: 06/18/2020

Determination of Patent Term Adjustment under 35 U.S.C. 154 (b)
(Applications filed on or after May 29, 2000)

The Office has discontinued providing a Patent Term Adjustment (PTA) calculation with the Notice of Allowance.

Section 1(h)(2) of the AIA Technical Corrections Act amended 35 U.S.C. 154(b)(3)(B)(i) to eliminate the requirement that the Office provide a patent term adjustment determination with the notice of allowance. See Revisions to Patent Term Adjustment, 78 Fed. Reg. 19416, 19417 (Apr. 1, 2013). Therefore, the Office is no longer providing an initial patent term adjustment determination with the notice of allowance. The Office will continue to provide a patent term adjustment determination with the Issue Notification Letter that is mailed to applicant approximately three weeks prior to the issue date of the patent, and will include the patent term adjustment on the patent. Any request for reconsideration of the patent term adjustment determination (or reinstatement of patent term adjustment) should follow the process outlined in 37 CFR 1.705.

Any questions regarding the Patent Term Extension or Adjustment determination should be directed to the Office of Patent Legal Administration at (571)-272-7702. Questions relating to issue and publication fee payments should be directed to the Customer Service Center of the Office of Patent Publication at 1-(888)-786-0101 or (571)-272-4200.

OMB Clearance and PRA Burden Statement for PTOL-85 Part B

The Paperwork Reduction Act (PRA) of 1995 requires Federal agencies to obtain Office of Management and Budget approval before requesting most types of information from the public. When OMB approves an agency request to collect information from the public, OMB (i) provides a valid OMB Control Number and expiration date for the agency to display on the instrument that will be used to collect the information and (ii) requires the agency to inform the public about the OMB Control Number's legal significance in accordance with 5 CFR 1320.5(b).

The information collected by PTOL-85 Part B is required by 37 CFR 1.311. The information is required to obtain or retain a benefit by the public which is to file (and by the USPTO to process) an application. Confidentiality is governed by 35 U.S.C. 122 and 37 CFR 1.14. This collection is estimated to take 30 minutes to complete, including gathering, preparing, and submitting the completed application form to the USPTO. Time will vary depending upon the individual case. Any comments on the amount of time you require to complete this form and/or suggestions for reducing this burden, should be sent to the Chief Information Officer, U.S. Patent and Trademark Office, U.S. Department of Commerce, P.O. Box 1450, Alexandria, Virginia 22313-1450. DO NOT SEND FEES OR COMPLETED FORMS TO THIS ADDRESS. SEND TO: Commissioner for Patents, P.O. Box 1450, Alexandria, Virginia 22313-1450. Under the Paperwork Reduction Act of 1995, no persons are required to respond to a collection of information unless it displays a valid OMB control number.

Privacy Act Statement

The Privacy Act of 1974 (P.L. 93-579) requires that you be given certain information in connection with your submission of the attached form related to a patent application or patent. Accordingly, pursuant to the requirements of the Act, please be advised that: (1) the general authority for the collection of this information is 35 U.S.C. 2(b)(2); (2) furnishing of the information solicited is voluntary; and (3) the principal purpose for which the information is used by the U.S. Patent and Trademark Office is to process and/or examine your submission related to a patent application or patent. If you do not furnish the requested information, the U.S. Patent and Trademark Office may not be able to process and/or examine your submission, which may result in termination of proceedings or abandonment of the application or expiration of the patent.

The information provided by you in this form will be subject to the following routine uses:

1. The information on this form will be treated confidentially to the extent allowed under the Freedom of Information Act (5 U.S.C. 552) and the Privacy Act (5 U.S.C 552a). Records from this system of records may be disclosed to the Department of Justice to determine whether disclosure of these records is required by the Freedom of Information Act.
2. A record from this system of records may be disclosed, as a routine use, in the course of presenting evidence to a court, magistrate, or administrative tribunal, including disclosures to opposing counsel in the course of settlement negotiations.
3. A record in this system of records may be disclosed, as a routine use, to a Member of Congress submitting a request involving an individual, to whom the record pertains, when the individual has requested assistance from the Member with respect to the subject matter of the record.
4. A record in this system of records may be disclosed, as a routine use, to a contractor of the Agency having need for the information in order to perform a contract. Recipients of information shall be required to comply with the requirements of the Privacy Act of 1974, as amended, pursuant to 5 U.S.C. 552a(m).
5. A record related to an International Application filed under the Patent Cooperation Treaty in this system of records may be disclosed, as a routine use, to the International Bureau of the World Intellectual Property Organization, pursuant to the Patent Cooperation Treaty.
6. A record in this system of records may be disclosed, as a routine use, to another federal agency for purposes of National Security review (35 U.S.C. 181) and for review pursuant to the Atomic Energy Act (42 U.S.C. 218(c)).
7. A record from this system of records may be disclosed, as a routine use, to the Administrator, General Services, or his/her designee, during an inspection of records conducted by GSA as part of that agency's responsibility to recommend improvements in records management practices and programs, under authority of 44 U.S.C. 2904 and 2906. Such disclosure shall be made in accordance with the GSA regulations governing inspection of records for this purpose, and any other relevant (i.e., GSA or Commerce) directive. Such disclosure shall not be used to make determinations about individuals.
8. A record from this system of records may be disclosed, as a routine use, to the public after either publication of the application pursuant to 35 U.S.C. 122(b) or issuance of a patent pursuant to 35 U.S.C. 151. Further, a record may be disclosed, subject to the limitations of 37 CFR 1.14, as a routine use, to the public if the record was filed in an application which became abandoned or in which the proceedings were terminated and which application is referenced by either a published application, an application open to public inspection or an issued patent.
9. A record from this system of records may be disclosed, as a routine use, to a Federal, State, or local law enforcement agency, if the USPTO becomes aware of a violation or potential violation of law or regulation.

Notice of Allowability	Application No. 16/808,137	Applicant(s) Shahriari, Ali	
	Examiner TIFFANY P SHIPMON	Art Unit 3774	AIA (FITF) Status No

-- The MAILING DATE of this communication appears on the cover sheet with the correspondence address--

All claims being allowable, PROSECUTION ON THE MERITS IS (OR REMAINS) CLOSED in this application. If not included herewith (or previously mailed), a Notice of Allowance (PTOL-85) or other appropriate communication will be mailed in due course. **THIS NOTICE OF ALLOWABILITY IS NOT A GRANT OF PATENT RIGHTS.** This application is subject to withdrawal from issue at the initiative of the Office or upon petition by the applicant. See 37 CFR 1.313 and MPEP 1308.

1. ☑ This communication is responsive to the claims filed 05/29/2020.
   ☐ A declaration(s)/affidavit(s) under **37 CFR 1.130(b)** was/were filed on _____.

2. ☐ An election was made by the applicant in response to a restriction requirement set forth during the interview on _____; the restriction requirement and election have been incorporated into this action.

3. ☑ The allowed claim(s) is/are 11-27 . As a result of the allowed claim(s), you may be eligible to benefit from the **Patent Prosecution Highway** program at a participating intellectual property office for the corresponding application. For more information, please see **http://www.uspto.gov/patents/init_events/pph/index.jsp** or send an inquiry to **PPHfeedback@uspto.gov.**

4. ☐ Acknowledgment is made of a claim for foreign priority under 35 U.S.C. § 119(a)-(d) or (f).

   Certified copies:

   a) ☐ All b) ☐ Some *c) ☐ None of the:

   1. ☐ Certified copies of the priority documents have been received.
   2. ☐ Certified copies of the priority documents have been received in Application No. _____ .
   3. ☐ Copies of the certified copies of the priority documents have been received in this national stage application from the International Bureau (PCT Rule 17.2(a)).

   * Certified copies not received: _____ .

Applicant has THREE MONTHS FROM THE "MAILING DATE" of this communication to file a reply complying with the requirements noted below. Failure to timely comply will result in ABANDONMENT of this application.
THIS THREE-MONTH PERIOD IS NOT EXTENDABLE.

5. ☐ CORRECTED DRAWINGS (as "replacement sheets") must be submitted.
   ☐ including changes required by the attached Examiner's Amendment / Comment or in the Office action of Paper No./Mail Date _____ .

   Identifying indicia such as the application number (see 37 CFR 1.84(c)) should be written on the drawings in the front (not the back) of each sheet. Replacement sheet(s) should be labeled as such in the header according to 37 CFR 1.121(d).

6. ☐ DEPOSIT OF and/or INFORMATION about the deposit of BIOLOGICAL MATERIAL must be submitted. Note the attached Examiner's comment regarding REQUIREMENT FOR THE DEPOSIT OF BIOLOGICAL MATERIAL.

Attachment(s)

1. ☐ Notice of References Cited (PTO-892)
2. ☑ Information Disclosure Statements (PTO/SB/08), Paper No./Mail Date _____.
3. ☐ Examiner's Comment Regarding Requirement for Deposit of Biological Material _____.
4. ☐ Interview Summary (PTO-413), Paper No./Mail Date. _____.
5. ☑ Examiner's Amendment/Comment
6. ☑ Examiner's Statement of Reasons for Allowance
7. ☐ Other _____.

/Christopher D. Prone/ Primary Examiner, Art Unit 3774	/TIFFANY P SHIPMON/ Examiner, Art Unit 3774

EXAMINER'S AMENDMENT

1. An examiner's amendment to the record appears below. Should the changes and/or additions be unacceptable to applicant, an amendment may be filed as provided by 37 CFR 1.312. To ensure consideration of such an amendment, it MUST be submitted no later than the payment of the issue fee.

The application has been amended as follows:

"(32)" has been deleted from line 8 of Claim 23.

"(216)" has been deleted from lines 7, 8, 9, and 12 of claim 22.

2. Claims 11-22 directed to an allowable product. Pursuant to the procedures set forth in MPEP § 821.04(B), claims 23-27, directed to the process of making or using an allowable product, previously withdrawn from consideration as a result of a restriction requirement, are hereby rejoined and fully examined for patentability under 37 CFR 1.104.

Because all claims previously withdrawn from consideration under 37 CFR 1.142 have been rejoined, **the restriction requirement as set forth in the Office action mailed on 5/29/2020 is hereby withdrawn**. In view of the withdrawal of the restriction requirement as to the rejoined inventions, applicant(s) are advised that if any claim presented in a continuation or divisional application is anticipated by, or includes all the limitations of, a claim that is allowable in the present application, such claim may be subject to provisional statutory and/or nonstatutory double patenting rejections over the claims of the instant application. Once the restriction requirement is withdrawn, the provisions of 35 U.S.C. 121 are no longer applicable. See *In re Ziegler*, 443 F.2d 1211, 1215, 170 USPQ 129, 131-32 (CCPA 1971). See also MPEP § 804.01.

Reasons for Allowance

3. The following is an examiner's statement of reasons for allowance: the prior art of record does not disclose or render obvious the sealing material positioned externally to the outer frame for providing a sealing between the outer frame and a patient's anatomical wall to prevent paravalvular leaks, wherein the sealing material includes a plurality of radially extending fibers that extend outwardly of the outer frame.

Any comments considered necessary by applicant must be submitted no later than the payment of the issue fee and, to avoid processing delays, should preferably accompany the issue fee. Such submissions should be clearly labeled "Comments on Statement of Reasons for Allowance."

Conclusion

Any inquiry concerning this communication or earlier communications from the examiner should be directed to TIFFANY P SHIPMON whose telephone number is (571)270-1448. The examiner can normally be reached on MONDAY-FRIDAY.

Examiner interviews are available via telephone, in-person, and video conferencing using a USPTO supplied web-based collaboration tool. To schedule an interview, applicant is encouraged to use the USPTO Automated Interview Request (AIR) at http://www.uspto.gov/interviewpractice.

If attempts to reach the examiner by telephone are unsuccessful, the examiner's supervisor, Jennifer Dieterle can be reached on 571-270-7872. The fax phone number for the organization where this application or proceeding is assigned is 571-273-8300.

Information regarding the status of an application may be obtained from the Patent Application Information Retrieval (PAIR) system. Status information for published applications may be obtained from either Private PAIR or Public PAIR. Status information for unpublished applications is available through Private PAIR only. For more information about the PAIR system, see https://ppair-

my.uspto.gov/pair/PrivatePair. Should you have questions on access to the Private PAIR system, contact the Electronic Business Center (EBC) at 866-217-9197 (toll-free). If you would like assistance from a USPTO Customer Service Representative or access to the automated information system, call 800-786-9199 (IN USA OR CANADA) or 571-272-1000.

/TIFFANY P SHIPMON/
Examiner, Art Unit 3774

/Christopher D. Prone/
Primary Examiner, Art Unit 3774

Issue Classification	Application/Control No.	Applicant(s)/Patent Under Reexamination
	16/808,137	Shahriari, Ali
	Examiner	**Art Unit**
	TIFFANY P SHIPMON	3774

CPC

Symbol					Type	Version
A61F	/	2	/	856	F	2013-01-01
A61F	/	2	/	07	I	2013-01-01
A61F	/	2	/	2418	I	2013-01-01
A61F	/	2	/	962	I	2013-01-01
A61F	/	2	/	82	I	2013-01-01
A61F	/	2002	/	067	A	2013-01-01
A61F	/	2	/	90	A	2013-01-01
A61F	/	2	/	89	A	2013-01-01
A61F	/	2220	/	0025	A	2013-01-01
A61F	/	2210	/	0014	A	2013-01-01
A61F	/	2210	/	0057	A	2013-01-01
A61F	/	2250	/	0048	A	2013-01-01
A61F	/	2230	/	001	A	2013-01-01
A61F	/	2220	/	0008	A	2013-01-01
A61F	/	2230	/	0067	A	2013-01-01
A61F	/	2220	/	0016	A	2013-01-01
A61F	/	2002	/	061	A	2013-01-01
A61F	/	2220	/	0058	A	2013-01-01
A61F	/	2220	/	0075	A	2013-01-01
A61F	/	2230	/	0034	A	2013-01-01
A61F	/	2210	/	00	A	2013-01-01

CPC Combination Sets

Symbol					Type	Set	Ranking	Version
	/		/					

/TIFFANY P SHIPMON/ Examiner, Art Unit 3774 (Assistant Examiner)	06 June 2020 (Date)	**Total Claims Allowed:** 17	
/Christopher D. Prone/ Primary Examiner, Art Unit 3774 (Primary Examiner)	08 June 2020 (Date)	O.G. Print Claim(s) 1	O.G. Print Figure 20

U.S. Patent and Trademark Office

Part of Paper No.: 20200606

Issue Classification	Application/Control No.	Applicant(s)/Patent Under Reexamination
	16/808,137	Shahriari, Ali
	Examiner	**Art Unit**
	TIFFANY P SHIPMON	3774

INTERNATIONAL CLASSIFICATION				
CLAIMED				
A61F	/	2	/	07

NON-CLAIMED				
	/		/	

US ORIGINAL CLASSIFICATION	
CLASS	**SUBCLASS**

CROSS REFERENCES(S)						
CLASS	**SUBCLASS (ONE SUBCLASS PER BLOCK)**					

/TIFFANY P SHIPMON/ Examiner, Art Unit 3774 (Assistant Examiner)	06 June 2020 (Date)	**Total Claims Allowed:** 17	
/Christopher D. Prone/ Primary Examiner, Art Unit 3774 (Primary Examiner)	08 June 2020 (Date)	O.G. Print Claim(s) 1	O.G. Print Figure 20

U.S. Patent and Trademark Office

Part of Paper No.: 20200606

Issue Classification	Application/Control No.	Applicant(s)/Patent Under Reexamination
	16/808,137	Shahriari, Ali
	Examiner	**Art Unit**
	TIFFANY P SHIPMON	3774

☐ Claims renumbered in the same order as presented by applicant ☐ CPA ☐ T.D. ☐ R.1.47

CLAIMS

Final	Original	Final	Original	Final	Original	Final	Original	Final	Original	Final	Original	Final	Original	Final	Original
1	11	10	20												
2	12	11	21												
3	13	12	22												
4	14	13	23												
5	15	14	24												
6	16	15	25												
7	17	16	26												
8	18	17	27												
9	19														

/TIFFANY P SHIPMON/ Examiner, Art Unit 3774 (Assistant Examiner)	06 June 2020 (Date)	**Total Claims Allowed:** 17	
/Christopher D. Prone/ Primary Examiner, Art Unit 3774 (Primary Examiner)	08 June 2020 (Date)	O.G. Print Claim(s) 1	O.G. Print Figure 20

U.S. Patent and Trademark Office Part of Paper No.: 20200606

Search Notes	Application/Control No.	Applicant(s)/Patent Under Reexamination
	16/808,137	Shahriari, Ali
	Examiner	**Art Unit**
	TIFFANY P SHIPMON	3774

CPC - Searched*		
Symbol	**Date**	**Examiner**
A61F 2/2418,2412,2436,2433,2475,2409	06/07/2020	T.S.

CPC Combination Sets - Searched*		
Symbol	**Date**	**Examiner**

US Classification - Searched*			
Class	**Subclass**	**Date**	**Examiner**

* See search history printout included with this form or the SEARCH NOTES box below to determine the scope of the search.

Search Notes		
Search Notes	**Date**	**Examiner**
EAST Search	06/07/2020	T.S.
IDS Search	06/07/2020	T.S.

Interference Search			
US Class/CPC Symbol	**US Subclass/CPC Group**	**Date**	**Examiner**
A61F	2/07		

/TIFFANY P SHIPMON/ Examiner, Art Unit 3774	/Christopher D. Prone/ Primary Examiner, Art Unit 3774

Doc code: IDS
Doc description: Information Disclosure Statement (IDS) Filed

PTO/SB/08a (02-18)
Approved for use through 11/30/2020. OMB 0651-0031
U.S. Patent and Trademark Office; U.S. DEPARTMENT OF COMMERCE
Under the Paperwork Reduction Act of 1995, no persons are required to respond to a collection of information unless it contains a valid OMB control number.

INFORMATION DISCLOSURE STATEMENT BY APPLICANT

(Not for submission under 37 CFR 1.99)

Application Number	16808137
Filing Date	2020-03-03
First Named Inventor	Ali Shahriari
Art Unit	-
Examiner Name	-
Attorney Docket Number	426/2/9 UTIL

U.S.PATENTS Remove

Examiner Initial*	Cite No	Patent Number	Kind Code[1]	Issue Date	Name of Patentee or Applicant of cited Document	Pages,Columns,Lines where Relevant Passages or Relevant Figures Appear
	1	8002826	B2	2011-08-23	SEGUIN	
	2	7947074	B2	2011-05-24	MERETEI	
	3	7799072	B2	2010-09-21	GREENBERG	
	4	8002826	B2	2011-08-23	SEGUIN	
	5	6258117	B2	2001-07-10	CAMRUD et al.	
	6	7018404	B2	2006-03-28	HOLMBERG et al.	
	7	7393360	B2	2008-07-01	SPENSER et al.	
	8	7510574	B2	2009-03-31	LE et al.	

ALL REFERENCES CONSIDERED EXCEPT WHERE LINED THROUGH. /T.P.S/

INFORMATION DISCLOSURE STATEMENT BY APPLICANT (Not for submission under 37 CFR 1.99)		
	Application Number	16808137
	Filing Date	2020-03-03
	First Named Inventor	Ali Shahriari
	Art Unit	-
	Examiner Name	-
	Attorney Docket Number	426/2/9 UTIL

	9	8016877	B2	2011-09-13	SEGUIN et al.	
	10	7252682	B2	2007-08-07	SEGUIN	
	11	8206438	B2	2012-06-26	YANG et al.	
	12	7780726	B2	2010-08-24	SEGUIN	
	13	5397355	A	1995-03-14	MARTIN et al.	
	14	7771467	B2	2010-08-10	SVENSSON	
	15	7799072	B2	2010-09-21	GREENBERG	
	16	6582462	B1	2003-06-24	ANDERSEN et al.	
	17	8226710	B2	2012-07-24	NGUYEN et al.	
	18	5102417	A	1992-04-07	PALMAZ	
	19	7914569	B2	2011-03-29	NGUYEN et al.	

INFORMATION DISCLOSURE STATEMENT BY APPLICANT (Not for submission under 37 CFR 1.99)		
	Application Number	16808137
	Filing Date	2020-03-03
	First Named Inventor	Ali Shahriari
	Art Unit	-
	Examiner Name	-
	Attorney Docket Number	426/2/9 UTIL

	20	5716393		1998-02-10	LINDBERG et al.	
	21	6254632	B1	2001-07-03	WU et al.	
	22	6334868	B1	2002-01-01	HAM	
	23	6752829	B2	2004-06-22	KOCUR et al.	
	24	8425584	B2	2013-04-23	CULLY et al.	
	25	5061275		1991-10-29	WALLSTEN et al.	
	26	5718159		1998-02-17	THOMPSON	
	27	5957974		1999-09-28	THOMPSON et al.	
	28	6004346		1999-12-21	WOLFF et al.	
	29	7588597	B2	2009-09-15	FRID	
	30	8394119	B2	2013-03-12	ZAVER et al.	

INFORMATION DISCLOSURE STATEMENT BY APPLICANT (Not for submission under 37 CFR 1.99)		
	Application Number	16808137
	Filing Date	2020-03-03
	First Named Inventor	Ali Shahriari
	Art Unit	-
	Examiner Name	-
	Attorney Docket Number	426/2/9 UTIL

	31	8398701		2013-03-19	BEREZ et al.	
	32	8414635		2013-04-09	HYODOH et al.	
	33	8419788		2013-04-16	SHELDON et al.	
	34	8617234		2013-12-31	GARCIA et al.	
	35	8623067		2014-01-07	BEREZ et al.	
	36	8715317		2014-05-06	JANARDHAN et al.	
	37	8721676		2014-05-13	JANARDHAN et al.	
	38	8911490		2014-12-16	PERKINS et al.	
	39	9005270		2015-04-14	PERKINS et al.	
	40	9034007		2015-05-19	JANARDHAN	
	41	9095343		2015-08-04	BEREZ et al.	

INFORMATION DISCLOSURE STATEMENT BY APPLICANT (Not for submission under 37 CFR 1.99)		
	Application Number	16808137
	Filing Date	2020-03-03
	First Named Inventor	Ali Shahriari
	Art Unit	-
	Examiner Name	-
	Attorney Docket Number	426/2/9 UTIL

	42	9114001		2015-08-25	KUSLEIKA et al.	
	43	9157174		2015-10-13	KUSLEIKA	
	44	9179931		2015-11-10	JANARDHAN et al.	
	45	9220899		2015-12-29	CATTANEO et al.	
	46	9314324		2016-04-19	JANARDHAN et al.	
	47	9358140		2016-06-07	CONNOR et al.	
	48	9393021		2016-07-19	GARCIA et al.	
	49	9393136		2016-07-19	PERKINS et al.	
	50	9452070		2016-09-27	KUSLEIKA	
	51	9943427		2018-04-17	LOSORDO et al.	
	52	6918925	B2	2005-07-19	TEHRANI	

INFORMATION DISCLOSURE STATEMENT BY APPLICANT (Not for submission under 37 CFR 1.99)		
	Application Number	16808137
	Filing Date	2020-03-03
	First Named Inventor	Ali Shahriari
	Art Unit	-
	Examiner Name	-
	Attorney Docket Number	426/2/9 UTIL

	53	7294146	B2	2005-07-19	TEHRANI	
	54	8021408	B2	2011-09-20	KANG et al.	
	55	8603156	B2	2013-12-10	HARTLEY et al.	
	56	8864808	B2	2014-10-21	GREENBERG et al.	
	57	9269739	B2	2016-02-23	MOLLARD et al.	
	58	9561102	B2	2017-02-07	RUST et al.	
	59	9629739	B2	2017-04-25	SLAZAS et al.	
	60	5976179	A	1999-11-02	INOUE	
	61	8940040	B2	2015-01-27	SHAHRIARI	
	62	10028848	B2	2018-07-24	SHAHRIARI	
	63	9833341	B2	2017-12-05	BOGENSCHUETZ et al.	

INFORMATION DISCLOSURE STATEMENT BY APPLICANT (Not for submission under 37 CFR 1.99)		
	Application Number	16808137
	Filing Date	2020-03-03
	First Named Inventor	Ali Shahriari
	Art Unit	-
	Examiner Name	-
	Attorney Docket Number	426/2/9 UTIL

	64	10321985	B2	2019-06-18	BARTHOLD et al.	
	65	5609627		1997-03-11	Goicoechea et al.	
	66	6464721		2002-10-15	Marcade et al.	
	67	6773457		2004-08-10	Ivancev et al.	
	68	6814752		2004-11-09	Chuter	
	69	7074235		2006-07-11	Roy	
	70	7306623		2007-12-11	Watson	
	71	7998187		2011-08-16	Hartley et al.	
	72	8002816		2011-08-23	Greenberg	
	73	8025694		2011-09-27	Strauss et al.	
	74	8545549		2013-10-01	Hartley et al.	

INFORMATION DISCLOSURE STATEMENT BY APPLICANT (Not for submission under 37 CFR 1.99)		
	Application Number	16808137
	Filing Date	2020-03-03
	First Named Inventor	Ali Shahriari
	Art Unit	-
	Examiner Name	-
	Attorney Docket Number	426/2/9 UTIL

	75	8562673		2013-10-22	Yeung et al.	
	76	8652198		2014-02-18	Andreas et al.	
	77	8715337		2014-05-06	Chuter	
	78	9220613		2015-12-29	Arnault De La Menardiere et al.	
	79	9289282		2016-03-22	Olson et al.	
	80	10034784		2018-07-31	Tang	
	81	8506622	B2	2013-08-13	Bruszewski, et al.	
	82	9757263	B2	2017-09-12	Roeder, et al.	
	83	6482228	B1	2002-11-19	Norred	

If you wish to add additional U.S. Patent citation information please click the Add button. Add

U.S.PATENT APPLICATION PUBLICATIONS Remove

Examiner Initial*	Cite No	Publication Number	Kind Code[1]	Publication Date	Name of Patentee or Applicant of cited Document	Pages,Columns,Lines where Relevant Passages or Relevant Figures Appear

EFS Web 2.1.18

ALL REFERENCES CONSIDERED EXCEPT WHERE LINED THROUGH. /T.P.S/

INFORMATION DISCLOSURE STATEMENT BY APPLICANT (Not for submission under 37 CFR 1.99)		
	Application Number	16808137
	Filing Date	2020-03-03
	First Named Inventor	Ali Shahriari
	Art Unit	-
	Examiner Name	-
	Attorney Docket Number	426/2/9 UTIL

	1	20040210304	A1	2004-10-21	SEGUIN et al.	
	2	20120046726	A1	2012-02-23	CHUTER	
	3	20070095283	A1	2007-05-03	GALEWSKI	
	4	20090125098	A1	2009-05-04	CHUTER	
	5	20110257731	A1	2011-10-20	HARTLEY et al.	
	6	20030040771	A1	2003-02-27	HYODOH et al.	
	7	20050197687	A1	2005-09-08	MOLAEI, et al.	
	8	20060149351	A1	2006-07-06	SMIRTHWAITE, et al.	
	9	20070250146	A1	2007-10-25	CULLY, et al.	
	10	20070276464	A1	2007-11-29	VALENCIA, et al.	
	11	20080132999	A1	2008-06-05	MERICLE,et al.	

INFORMATION DISCLOSURE STATEMENT BY APPLICANT (Not for submission under 37 CFR 1.99)		
	Application Number	16808137
	Filing Date	2020-03-03
	First Named Inventor	Ali Shahriari
	Art Unit	-
	Examiner Name	-
	Attorney Docket Number	426/2/9 UTIL

	12	20090099644	A1	2009-04-16	BIADILLAH et al.	
	13	20090198315	A1	2009-08-06	BOUDJEMLINE	
	14	20100042202	A1	2010-02-18	RAMZIPOOR et al.	
	15	20120089218	A1	2012-04-12	DARDI	
	16	20140172064	A1	2014-06-19	KELLY	
	17	20090312834	A1	2009-12-17	WOOD et al.	
	18	20160022450	A1	2016-01-28	HEHRLEIN	
	19	20140046428	A1	2014-02-13	CRAGG et al.	
	20	20160270935	A1	2016-09-22	RASMUSSEN et al.	
	21	20070067014	A1	2007-03-22	KE et al.	
	22	20080132993	A1	2005-06-05	RASMUSSEN et al.	

INFORMATION DISCLOSURE STATEMENT BY APPLICANT (Not for submission under 37 CFR 1.99)		
	Application Number	16808137
	Filing Date	2020-03-03
	First Named Inventor	Ali Shahriari
	Art Unit	-
	Examiner Name	-
	Attorney Docket Number	426/2/9 UTIL

	23	20100094409	A1	2010-04-15	BARKER et al.	
	24	20140336749	A1	2014-11-13	BOGENSCHUETZ et al.	
	25	20080275548	A1	2008-11-06	SVENSSON LARS G	
	26	20090171456	A1	2009-07-02	KVEEN et al.	
	27	20170209254	A1	2017-07-27	BARTHOLD et al.	
	28	20080262592	A1	2008-10-23	JORDAN et al.	
	29	20020177890	A1	2002-11-28	LENKER	
	30	20060155366	A1	2006-07-13	LADUCA et al.	
	31	20100049313	A1	2010-02-25	ALON et al.	
	32	20140316513	A1	2014-10-23	TANG	
	33	20070168013	A1	2007-07-19	DOUGLAS	

INFORMATION DISCLOSURE STATEMENT BY APPLICANT (Not for submission under 37 CFR 1.99)		
	Application Number	16808137
	Filing Date	2020-03-03
	First Named Inventor	Ali Shahriari
	Art Unit	-
	Examiner Name	-
	Attorney Docket Number	426/2/9 UTIL

	34	20130144373	A1	2013-06-06	SHAHRIARI	
	35	20070203559	A1	2007-08-30	FREUDENTHAL	
	36	20050043790	A1	2005-02-24	SEGUIN	
	37	20010044650	A1	2001-11-22	Simso Eric J. et al.	
	38	20020082684	A1	2002-06-27	Mishaly	
	39	20040249399	A1	2004-12-09	Cinquin et al.	
	40	20070219613	A1	2007-09-20	Kao et al.	
	41	20090036977	A1	2009-02-05	Rassat et al.	
	42	20090099650	A1	2009-04-16	Bolduc et al.	
	43	20100087907	A1	2010-04-08	Lattouf	
	44	20130013050	A1	2013-01-10	v	

INFORMATION DISCLOSURE STATEMENT BY APPLICANT (Not for submission under 37 CFR 1.99)		
	Application Number	16808137
	Filing Date	2020-03-03
	First Named Inventor	Ali Shahriari
	Art Unit	-
	Examiner Name	-
	Attorney Docket Number	426/2/9 UTIL

If you wish to add additional U.S. Published Application citation information please click the Add button. Add

FOREIGN PATENT DOCUMENTS Remove

Examiner Initial*	Cite No	Foreign Document Number[3]	Country Code[2] i	Kind Code[4]	Publication Date	Name of Patentee or Applicant of cited Document	Pages,Columns,Lines where Relevant Passages or Relevant Figures Appear	T[5]
	1	2012147675	WO	A1	2014-07-28	PIOLAX MEDICAL DEVICES, INC.		
	2	2004089249	WO	A1	2004-10-21	HARTLEY et al.		
	3	2013086132	WO	A1	2013-06-13	AORTIC INNOVATIONS LLC	English equivalent US2013144373A1 provided	
	4	2787925	EP	A1	2014-10-15	AORTIC INNOVATIONS LLC	English equivalent US2013144373A1 provided	
	5	102014114747	DE	A1	2016-04-14	JOTEC GmbH	English equivalent US2017209254A1 provided	
	6	2011502628	JP	A	2011-01-27	COOK INCORPORATED	English equivalent US2009125098A1 provided	
	7	2011507658	JP	A	2011-03-10	BOSTON SCIENTIFIC LIMITED	English equivalent US2009171456A1 provided	
	8	2011035154	WO	A1	2011-03-24	THE REGENTS OF THE UNIVERSITY OF CALIFORNIA		
	9	2006127412	WO	A1	2006-11-30	CLEVELAND CLINIC FOUNDATION		

INFORMATION DISCLOSURE STATEMENT BY APPLICANT (Not for submission under 37 CFR 1.99)		
	Application Number	16808137
	Filing Date	2020-03-03
	First Named Inventor	Ali Shahriari
	Art Unit	-
	Examiner Name	-
	Attorney Docket Number	426/2/9 UTIL

	10	2010031060	WO	A1	2010-03-18	MEDTRONIC VENTOR TECHNOLOGIES		
	11	2010006627	WO	A1	2010-01-21	CENTOLA MARCOS		
	12	03003949	WO	A2	2003-01-16	SEGUIN JACQUES	English equivalent US2005043790A1 provided	
	13	102014805	CN	A	2011-04-13	BOLTON MEDICAL INC.		
	14	2010105195	WO	A2	2010-09-16	BOLTON MEDICAL INC.		
	15	0187180	WO	A2	2001-11-22	XTENT MEDICAL INC		
	16	2005087117	WO	A1	2005-09-22	PFM PROD FUER DIE MED AG	English equivalent US2007203559A1 provided	
	17	2013040663	WO	A1	2013-03-28	Lourenco et al.		
	18	2013059596	WO	A1	2013-04-25	Madjorov et al.		
	19	2014072501	WO	A2	2014-05-15	Danner et al.		
	20	10065824	DE		2018-10-31	JOTEC GmbH		

INFORMATION DISCLOSURE STATEMENT BY APPLICANT (Not for submission under 37 CFR 1.99)		
	Application Number	16808137
	Filing Date	2020-03-03
	First Named Inventor	Ali Shahriari
	Art Unit	-
	Examiner Name	-
	Attorney Docket Number	426/2/9 UTIL

	21	19857887	DE		2000-07-06	FRAUNHOFER GES FORSCHUNG FIGULLA HANS-REINER ET AL		

If you wish to add additional Foreign Patent Document citation information please click the Add button Add

NON-PATENT LITERATURE DOCUMENTS Remove

Examiner Initials*	Cite No	Include name of the author (in CAPITAL LETTERS), title of the article (when appropriate), title of the item (book, magazine, journal, serial, symposium, catalog, etc), date, pages(s), volume-issue number(s), publisher, city and/or country where published.	T[5]
	1	SINGH, et al. "A biometric Approach For Designing Stent-Graft Structures: Caterpillar Cuticle as Design Model", Journal of the Mechanical Behavior of Biomedical Materials, Vol. 30, February 2014, 3 pages, accessed at www.sciencedirect.com/science/article/pii/S175161611300341X	
	2	ISA/US; International Search Report and Written Opinion for International Patent Application No. PCT/US2012/068165, dated February 15, 2013, 8 pages.	
	3	PIAZZA, et al., "Anatomy of the Aortic Valvar Complex and Its Implications for Transcatheter Implantation of the Aortic Valve", Circulation: Cardiovascular Interventions, Journal of the American Heart Association, 2008, 10 pages.	
	4	STOECKEL et al., "A Survey of Stent Designs", NDC, 2002, pages 137-147.	
	5	WIPO; International Preliminary Report on Patentability for International Patent Application No. PCT/US2012/068165, dated June 10, 2014, 7 pages.	
	6	CIPO; Office Action for Canadian Patent Application No. 2,858,390 dated July 27, 2015, 3 pages.	
	7	CNIPA; Office Action for Chinese Patent Application No. 2012800577516 dated May 6, 2015, 6 pages.	
	8	EPO; Extended European Search Report for European Patent Application No. 18153473.6 dated July 23, 2018.	

INFORMATION DISCLOSURE STATEMENT BY APPLICANT (Not for submission under 37 CFR 1.99)		
	Application Number	16808137
	Filing Date	2020-03-03
	First Named Inventor	Ali Shahriari
	Art Unit	-
	Examiner Name	-
	Attorney Docket Number	426/2/9 UTIL

	9	JPO; Japanese Patent Office for Japanese Patent Application No. 2017-078010, dated February 20, 2018.	
	10	CIPO; Office Action for Canadian Patent Application No. 2,858,390 dated August 24, 2017.	
	11	EPO; Examination Report for European Patent Application No. 12854807.0 dated September 1, 2016.	
	12	JPO; Office Action for Japanese Patent Application No. 2018-206631, dated October 23, 2019, 9 pages.	
	13	CNIPA; Office Action for Chinese Patent Application No. 201680007062.2 dated September 29, 2018, 15 pages.	
	14	EPO; Extended European Search Report for European Patent Application No. 16735541.1 dated July 20, 2018, 8 pages.	X
	15	EPO; Extended European Search Report in European Patent Application No. 16743828.2 dated September 25, 2018.	☐
	16	USPTO; Non-Final Office Action for U.S. Patent Application No. 13/706,896 dated July 18, 2014, 10 pages.	☐
	17	USPTO; Non-Final Office Action for U.S. Patent Application No. 14/569,306 dated February 12, 2016, 6 pages.	☐
	18	USPTO; Non-Final Office Action for U.S. Patent Application No. 14/614,628 dated September 22, 2017, 8 pages.	☐
	19	USPTO; Non-Final Office Action for U.S. Patent Application No. 14/614,628 dated June 6, 2017, 9 pages.	☐

INFORMATION DISCLOSURE STATEMENT BY APPLICANT (Not for submission under 37 CFR 1.99)		
	Application Number	16808137
	Filing Date	2020-03-03
	First Named Inventor	Ali Shahriari
	Art Unit	-
	Examiner Name	-
	Attorney Docket Number	426/2/9 UTIL

	20	USPTO; Non-Final Office Action for U.S. Patent Application No. 14/614,628 dated March 25, 2016, 9 pages.	☐
	21	USPTO; Non-Final Office Action for U.S. Patent Application No. 16/042,286 dated July 29, 2019, 5 pages.	☐
	22	DI BARTOLOMEO, et al., "Frozen elephant trunk surgery using the E-vita open plus prosthesis", Masters of Cardiothoracic Surgery, Annals Cardiothoracic Surgery, 2013, Vol. 2. No. 5, pages 656-659.	☐
	23	INTENTUS GROUP, INTELLECTUAL PROPERTY SEARCH SERVICES, Two-Part Arterial Stent with Seal, March 1, 2020, Pgs. 1-19	☐

If you wish to add additional non-patent literature document citation information please click the Add button Add

EXAMINER SIGNATURE

Examiner Signature	/TIFFANY P SHIPMON/	Date Considered	06/06/2020

*EXAMINER: Initial if reference considered, whether or not citation is in conformance with MPEP 609. Draw line through a citation if not in conformance and not considered. Include copy of this form with next communication to applicant.

[1] See Kind Codes of USPTO Patent Documents at www.USPTO.GOV or MPEP 901.04. [2] Enter office that issued the document, by the two-letter code (WIPO Standard ST.3). [3] For Japanese patent documents, the indication of the year of the reign of the Emperor must precede the serial number of the patent document. [4] Kind of document by the appropriate symbols as indicated on the document under WIPO Standard ST.16 if possible. [5] Applicant is to place a check mark here if English language translation is attached.

INFORMATION DISCLOSURE STATEMENT BY APPLICANT (Not for submission under 37 CFR 1.99)		
	Application Number	16808137
	Filing Date	2020-03-03
	First Named Inventor	Ali Shahriari
	Art Unit	-
	Examiner Name	-
	Attorney Docket Number	426/2/9 UTIL

CERTIFICATION STATEMENT

Please see 37 CFR 1.97 and 1.98 to make the appropriate selection(s):

That each item of information contained in the information disclosure statement was first cited in any communication from a foreign patent office in a counterpart foreign application not more than three months prior to the filing of the information disclosure statement. See 37 CFR 1.97(e)(1).

OR

☐ That no item of information contained in the information disclosure statement was cited in a communication from a foreign patent office in a counterpart foreign application, and, to the knowledge of the person signing the certification after making reasonable inquiry, no item of information contained in the information disclosure statement was known to any individual designated in 37 CFR 1.56(c) more than three months prior to the filing of the information disclosure statement. See 37 CFR 1.97(e)(2).

See attached certification statement.

The fee set forth in 37 CFR 1.17 (p) has been submitted herewith.

☒ A certification statement is not submitted herewith.

SIGNATURE

A signature of the applicant or representative is required in accordance with CFR 1.33, 10.18. Please see CFR 1.4(d) for the form of the signature.

Signature	/Justin R. Nifong/	Date (YYYY-MM-DD)	2020-03-10
Name/Print	Justin R. Nifong	Registration Number	59389

This collection of information is required by 37 CFR 1.97 and 1.98. The information is required to obtain or retain a benefit by the public which is to file (and by the USPTO to process) an application. Confidentiality is governed by 35 U.S.C. 122 and 37 CFR 1.14. This collection is estimated to take 1 hour to complete, including gathering, preparing and submitting the completed application form to the USPTO. Time will vary depending upon the individual case. Any comments on the amount of time you require to complete this form and/or suggestions for reducing this burden, should be sent to the Chief Information Officer, U.S. Patent and Trademark Office, U.S. Department of Commerce, P.O. Box 1450, Alexandria, VA 22313-1450. DO NOT SEND FEES OR COMPLETED FORMS TO THIS ADDRESS. **SEND TO: Commissioner for Patents, P.O. Box 1450, Alexandria, VA 22313-1450.**

Privacy Act Statement

The Privacy Act of 1974 (P.L. 93-579) requires that you be given certain information in connection with your submission of the attached form related to a patent application or patent. Accordingly, pursuant to the requirements of the Act, please be advised that: (1) the general authority for the collection of this information is 35 U.S.C. 2(b)(2); (2) furnishing of the information solicited is voluntary; and (3) the principal purpose for which the information is used by the U.S. Patent and Trademark Office is to process and/or examine your submission related to a patent application or patent. If you do not furnish the requested information, the U.S. Patent and Trademark Office may not be able to process and/or examine your submission, which may result in termination of proceedings or abandonment of the application or expiration of the patent.

The information provided by you in this form will be subject to the following routine uses:

1. The information on this form will be treated confidentially to the extent allowed under the Freedom of Information Act (5 U.S.C. 552) and the Privacy Act (5 U.S.C. 552a). Records from this system of records may be disclosed to the Department of Justice to determine whether the Freedom of Information Act requires disclosure of these record s.

2. A record from this system of records may be disclosed, as a routine use, in the course of presenting evidence to a court, magistrate, or administrative tribunal, including disclosures to opposing counsel in the course of settlement negotiations.

3. A record in this system of records may be disclosed, as a routine use, to a Member of Congress submitting a request involving an individual, to whom the record pertains, when the individual has requested assistance from the Member with respect to the subject matter of the record.

4. A record in this system of records may be disclosed, as a routine use, to a contractor of the Agency having need for the information in order to perform a contract. Recipients of information shall be required to comply with the requirements of the Privacy Act of 1974, as amended, pursuant to 5 U.S.C. 552a(m).

5. A record related to an International Application filed under the Patent Cooperation Treaty in this system of records may be disclosed, as a routine use, to the International Bureau of the World Intellectual Property Organization, pursuant to the Patent Cooperation Treaty.

6. A record in this system of records may be disclosed, as a routine use, to another federal agency for purposes of National Security review (35 U.S.C. 181) and for review pursuant to the Atomic Energy Act (42 U.S.C. 218(c)).

7. A record from this system of records may be disclosed, as a routine use, to the Administrator, General Services, or his/her designee, during an inspection of records conducted by GSA as part of that agency's responsibility to recommend improvements in records management practices and programs, under authority of 44 U.S.C. 2904 and 2906. Such disclosure shall be made in accordance with the GSA regulations governing inspection of records for this purpose, and any other relevant (i.e., GSA or Commerce) directive. Such disclosure shall not be used to make determinations about individuals.

8. A record from this system of records may be disclosed, as a routine use, to the public after either publication of the application pursuant to 35 U.S.C. 122(b) or issuance of a patent pursuant to 35 U.S.C. 151. Further, a record may be disclosed, subject to the limitations of 37 CFR 1.14, as a routine use, to the public if the record was filed in an application which became abandoned or in which the proceedings were terminated and which application is referenced by either a published application, an application open to public inspections or an issued patent.

9. A record from this system of records may be disclosed, as a routine use, to a Federal, State, or local law enforcement agency, if the USPTO becomes aware of a violation or potential violation of law or regulation.

Doc code: IDS
Doc description: Information Disclosure Statement (IDS) Filed

PTO/SB/08a (02-18)
Approved for use through 11/30/2020. OMB 0651-0031
U.S. Patent and Trademark Office; U.S. DEPARTMENT OF COMMERCE
Under the Paperwork Reduction Act of 1995, no persons are required to respond to a collection of information unless it contains a valid OMB control number.

INFORMATION DISCLOSURE STATEMENT BY APPLICANT (Not for submission under 37 CFR 1.99)		
	Application Number	16808137
	Filing Date	2020-03-03
	First Named Inventor	Ali Shahriari
	Art Unit	3774
	Examiner Name	-
	Attorney Docket Number	426/2/9 UTIL

U.S.PATENTS Remove

Examiner Initial*	Cite No	Patent Number	Kind Code[1]	Issue Date	Name of Patentee or Applicant of cited Document	Pages,Columns,Lines where Relevant Passages or Relevant Figures Appear
	1					

If you wish to add additional U.S. Patent citation information please click the Add button. Add

U.S.PATENT APPLICATION PUBLICATIONS Remove

Examiner Initial*	Cite No	Publication Number	Kind Code[1]	Publication Date	Name of Patentee or Applicant of cited Document	Pages,Columns,Lines where Relevant Passages or Relevant Figures Appear
	1					

If you wish to add additional U.S. Published Application citation information please click the Add button. Add

FOREIGN PATENT DOCUMENTS Remove

Examiner Initial*	Cite No	Foreign Document Number[3]	Country Code[2] i	Kind Code[4]	Publication Date	Name of Patentee or Applicant of cited Document	Pages,Columns,Lines where Relevant Passages or Relevant Figures Appear	T[5]
	1							

If you wish to add additional Foreign Patent Document citation information please click the Add button Add

NON-PATENT LITERATURE DOCUMENTS Remove

Examiner Initials*	Cite No	Include name of the author (in CAPITAL LETTERS), title of the article (when appropriate), title of the item (book, magazine, journal, serial, symposium, catalog, etc), date, pages(s), volume-issue number(s), publisher, city and/or country where published.	T[5]

ALL REFERENCES CONSIDERED EXCEPT WHERE LINED THROUGH. /T.P.S/

INFORMATION DISCLOSURE STATEMENT BY APPLICANT (Not for submission under 37 CFR 1.99)		
	Application Number	16808137
	Filing Date	2020-03-03
	First Named Inventor	Ali Shahriari
	Art Unit	3774
	Examiner Name	-
	Attorney Docket Number	426/2/9 UTIL

	1	SAIA, FRANCESCO, et al., In-hospital and thirty-day outcomes of the SAPIEN 3 Ultra balloon-expandable transcatheter aortic valve: the S3U registry, Interventions for Valvular Disease and Heart Failure, Clinical Research, EuroIntervention 2020; 15: 1240-1247, November 2019, Pgs. 1-10	
	2	SAIA, F, et al., In-hospital and thirty-day outcomes of the SAPIEN 3 Ultra balloon-expandable transcatheter aortic valve: the S3U registry, EuroIntervention, Feb. 20, 2020, Vol 15, No. 14, Pgs. 1240-1247, doi: 10.4244/EIJ-D-19-00541	

If you wish to add additional non-patent literature document citation information please click the Add button Add

EXAMINER SIGNATURE

Examiner Signature	/TIFFANY P SHIPMON/	Date Considered	06/06/2020

*EXAMINER: Initial if reference considered, whether or not citation is in conformance with MPEP 609. Draw line through a citation if not in conformance and not considered. Include copy of this form with next communication to applicant.

[1] See Kind Codes of USPTO Patent Documents at www.USPTO.GOV or MPEP 901.04. [2] Enter office that issued the document, by the two-letter code (WIPO Standard ST.3). [3] For Japanese patent documents, the indication of the year of the reign of the Emperor must precede the serial number of the patent document. [4] Kind of document by the appropriate symbols as indicated on the document under WIPO Standard ST.16 if possible. [5] Applicant is to place a check mark here if English language translation is attached.

ALL REFERENCES CONSIDERED EXCEPT WHERE LINED THROUGH. /T.P.S/

INFORMATION DISCLOSURE STATEMENT BY APPLICANT (Not for submission under 37 CFR 1.99)		
	Application Number	16808137
	Filing Date	2020-03-03
	First Named Inventor	Ali Shahriari
	Art Unit	3774
	Examiner Name	-
	Attorney Docket Number	426/2/9 UTIL

CERTIFICATION STATEMENT

Please see 37 CFR 1.97 and 1.98 to make the appropriate selection(s):

That each item of information contained in the information disclosure statement was first cited in any communication from a foreign patent office in a counterpart foreign application not more than three months prior to the filing of the information disclosure statement. See 37 CFR 1.97(e)(1).

OR

☐ That no item of information contained in the information disclosure statement was cited in a communication from a foreign patent office in a counterpart foreign application, and, to the knowledge of the person signing the certification after making reasonable inquiry, no item of information contained in the information disclosure statement was known to any individual designated in 37 CFR 1.56(c) more than three months prior to the filing of the information disclosure statement. See 37 CFR 1.97(e)(2).

See attached certification statement.

The fee set forth in 37 CFR 1.17 (p) has been submitted herewith.

☒ A certification statement is not submitted herewith.

SIGNATURE

A signature of the applicant or representative is required in accordance with CFR 1.33, 10.18. Please see CFR 1.4(d) for the form of the signature.

Signature	/Justin R. Nifong/	Date (YYYY-MM-DD)	2020-05-01
Name/Print	Justin R. Nifong	Registration Number	59389

This collection of information is required by 37 CFR 1.97 and 1.98. The information is required to obtain or retain a benefit by the public which is to file (and by the USPTO to process) an application. Confidentiality is governed by 35 U.S.C. 122 and 37 CFR 1.14. This collection is estimated to take 1 hour to complete, including gathering, preparing and submitting the completed application form to the USPTO. Time will vary depending upon the individual case. Any comments on the amount of time you require to complete this form and/or suggestions for reducing this burden, should be sent to the Chief Information Officer, U.S. Patent and Trademark Office, U.S. Department of Commerce, P.O. Box 1450, Alexandria, VA 22313-1450. DO NOT SEND FEES OR COMPLETED FORMS TO THIS ADDRESS. **SEND TO: Commissioner for Patents, P.O. Box 1450, Alexandria, VA 22313-1450.**

Privacy Act Statement

The Privacy Act of 1974 (P.L. 93-579) requires that you be given certain information in connection with your submission of the attached form related to a patent application or patent. Accordingly, pursuant to the requirements of the Act, please be advised that: (1) the general authority for the collection of this information is 35 U.S.C. 2(b)(2); (2) furnishing of the information solicited is voluntary; and (3) the principal purpose for which the information is used by the U.S. Patent and Trademark Office is to process and/or examine your submission related to a patent application or patent. If you do not furnish the requested information, the U.S. Patent and Trademark Office may not be able to process and/or examine your submission, which may result in termination of proceedings or abandonment of the application or expiration of the patent.

The information provided by you in this form will be subject to the following routine uses:

1. The information on this form will be treated confidentially to the extent allowed under the Freedom of Information Act (5 U.S.C. 552) and the Privacy Act (5 U.S.C. 552a). Records from this system of records may be disclosed to the Department of Justice to determine whether the Freedom of Information Act requires disclosure of these record s.

2. A record from this system of records may be disclosed, as a routine use, in the course of presenting evidence to a court, magistrate, or administrative tribunal, including disclosures to opposing counsel in the course of settlement negotiations.

3. A record in this system of records may be disclosed, as a routine use, to a Member of Congress submitting a request involving an individual, to whom the record pertains, when the individual has requested assistance from the Member with respect to the subject matter of the record.

4. A record in this system of records may be disclosed, as a routine use, to a contractor of the Agency having need for the information in order to perform a contract. Recipients of information shall be required to comply with the requirements of the Privacy Act of 1974, as amended, pursuant to 5 U.S.C. 552a(m).

5. A record related to an International Application filed under the Patent Cooperation Treaty in this system of records may be disclosed, as a routine use, to the International Bureau of the World Intellectual Property Organization, pursuant to the Patent Cooperation Treaty.

6. A record in this system of records may be disclosed, as a routine use, to another federal agency for purposes of National Security review (35 U.S.C. 181) and for review pursuant to the Atomic Energy Act (42 U.S.C. 218(c)).

7. A record from this system of records may be disclosed, as a routine use, to the Administrator, General Services, or his/her designee, during an inspection of records conducted by GSA as part of that agency's responsibility to recommend improvements in records management practices and programs, under authority of 44 U.S.C. 2904 and 2906. Such disclosure shall be made in accordance with the GSA regulations governing inspection of records for this purpose, and any other relevant (i.e., GSA or Commerce) directive. Such disclosure shall not be used to make determinations about individuals.

8. A record from this system of records may be disclosed, as a routine use, to the public after either publication of the application pursuant to 35 U.S.C. 122(b) or issuance of a patent pursuant to 35 U.S.C. 151. Further, a record may be disclosed, subject to the limitations of 37 CFR 1.14, as a routine use, to the public if the record was filed in an application which became abandoned or in which the proceedings were terminated and which application is referenced by either a published application, an application open to public inspections or an issued patent.

9. A record from this system of records may be disclosed, as a routine use, to a Federal, State, or local law enforcement agency, if the USPTO becomes aware of a violation or potential violation of law or regulation.

Bibliographic Data

Application No: 16/808,137

Foreign Priority claimed: ○ Yes ◉ No

35 USC 119 (a-d) conditions met: ☐ Yes ☐ No ☐ Met After Allowance

Verified and Acknowledged: /TIFFANY P SHIPMON/ (Examiner's Signature) | Initials

Title: DEVICE FOR ENDOVASCULAR AORTIC REPAIR AND METHOD OF USING THE SAME

FILING or 371(c) DATE	CLASS	GROUP ART UNIT	ATTORNEY DOCKET NO.
03/03/2020 **RULE**	623	3774	426/2/9 UTIL

APPLICANTS

Aortic Innovations, LLC, Boca Raton, FL, UNITED STATES

INVENTORS

Ali Shahriari Boca Raton, FL, UNITED STATES

CONTINUING DATA

This application is a CON of 16736879 01/08/2020

16736879 is a CON of 16042286 07/23/2018 PAT 10555823

16042286 is a CON of 14614628 02/05/2015 PAT 10028848

14614628 is a CON of 14569306 12/12/2014 PAT 9339399

14569306 is a DIV of 13706896 12/06/2012 PAT 8940040

13706896 has PRO of 61723446 11/07/2012

13706896 has PRO of 61567458 12/06/2011

FOREIGN APPLICATIONS

IF REQUIRED, FOREIGN LICENSE GRANTED**

03/17/2020

**** SMALL ENTITY ****

STATE OR COUNTRY

UNITED STATES

ADDRESS

NK Patent Law
4917 Waters Edge Dr.
Suite 275
Raleigh, NC 27606
UNITED STATES

FILING FEE RECEIVED

$2,855

EAST Search History

EAST Search History (Prior Art)

Ref #	Hits	Search Query	DBs	Default Operator	Plurals	Time Stamp
L4	3,550	a61f2/2409.cpc.	US-PGPUB; USPAT; EPO; JPO; DERWENT	OR	OFF	2020/06/07 10:04
L5	1,905	L4 and (seal$4)	US-PGPUB; USPAT; EPO; JPO; DERWENT	OR	OFF	2020/06/07 10:04
S2	3	(("7799072") or ("8002826") or ("7947074")).PN.	US-PGPUB; USPAT; USOCR	OR	OFF	2014/06/28 22:05
S3	21	("20120046726" | "7018404" | "7799072" | "8016877" | "20070250146" | "6334868" | "7510574" | "8002826" | "20070276464" | "6752829" | "5102417" | "7947074" | "20070095283" | "20110257731" | "7393360" | "7914569" | "8226710" | "20040210304" | "5397355" | "7780726" | "20050197687" | "20060149351" | "20090198315" | "20100042202" | "7252682" | "20030040771" | "20120089218" | "5716393" | "6254632" | "20090125098" | "6582462" | "7771467" | "8206438" | "20080132999" | "20090099644" | "8425584").PN.	USPAT	OR	OFF	2014/06/28 23:06
S4	36	("20120046726" | "7018404" | "7799072" | "8016877" | "20070250146" | "6334868" | "7510574" | "8002826" | "20070276464" | "6752829" | "5102417" | "7947074" | "20070095283" | "20110257731" | "7393360" | "7914569" | "8226710" | "20040210304" | "5397355" | "7780726" | "20050197687" | "20060149351" | "20090198315" | "20100042202" | "7252682" | "20030040771" | "20120089218" | "5716393" | "6254632" | "20090125098" | "6582462" |	US-PGPUB; USPAT	OR	OFF	2014/06/28 23:24

		"7771467" | "8206438" | "20080132999" | "20090099644" | "8425584").PN.				
S5	317	(623/2.14).CCLS.	US-PGPUB; USPAT; USOCR; JPO; DERWENT	OR	OFF	2014/06/28 23:30
S7	38	a61f2/2418	US-PGPUB; USPAT; EPO; JPO; DERWENT	OR	OFF	2014/06/28 23:31
S8	59	a61f2/2412	US-PGPUB; USPAT; EPO; JPO; DERWENT	OR	OFF	2014/06/28 23:31
S9	41	a61f2/2436	US-PGPUB; USPAT; EPO; JPO; DERWENT	OR	OFF	2014/06/28 23:31
S10	17	a61f2/2433	US-PGPUB; USPAT; EPO; JPO; DERWENT	OR	OFF	2014/06/28 23:31
S11	11	a61f2/2475	US-PGPUB; USPAT; EPO; JPO; DERWENT	OR	OFF	2014/06/28 23:31
S12	1	"13706896"	US-PGPUB; USPAT	OR	OFF	2014/06/29 16:46
S13	2,346	623/1.12	US-PGPUB; USPAT	OR	OFF	2014/06/29 18:07
S14	401	S13 and fibers	US-PGPUB; USPAT	OR	OFF	2014/06/29 18:07
S15	3	S13 and ((fibers with collagen) same migration)	US-PGPUB; USPAT	OR	OFF	2014/06/29 18:12
S16	30	S13 and ((fibers with collagen))	US-PGPUB; USPAT	OR	OFF	2014/06/29 18:13
S17	74	623/1.13 and ((fibers with collagen))	US-PGPUB; USPAT	OR	OFF	2014/06/29 18:43
S18	2,377	stent and graft and fibers and migration	US-PGPUB; USPAT	OR	OFF	2014/06/29 18:48
S19	317	(623/2.14).CCLS.	US-PGPUB; USPAT; USOCR; JPO; DERWENT	OR	OFF	2014/06/29 18:49

S20	19	S19 and S18	US-PGPUB; USPAT	OR	OFF	2014/06/29 18:49
S21	21	("20120046726" | "7018404" | "7799072" | "8016877" | "20070250146" | "6334868" | "7510574" | "8002826" | "20070276464" | "6752829" | "5102417" | "7947074" | "20070095283" | "20110257731" | "7393360" | "7914569" | "8226710" | "20040210304" | "5397355" | "7780726" | "20050197687" | "20060149351" | "20090198315" | "20100042202" | "7252682" | "20030040771" | "20120089218" | "5716393" | "6254632" | "20090125098" | "6582462" | "7771467" | "8206438" | "20080132999" | "20090099644" | "8425584").PN.	USPAT	OR	OFF	2014/06/29 18:52
S22	1	S21 and fibers	USPAT	OR	OFF	2014/06/29 18:52
S23	3	S21 and fiber	USPAT	OR	OFF	2014/06/29 18:53
S24	3	S21 and fiber	US-PGPUB; USPAT; FPRS; EPO; JPO; DERWENT	OR	OFF	2014/06/29 18:53
S25	1	("7799072").PN.	USPAT; USOCR	OR	OFF	2014/07/14 09:28
S26	3	meretei.in.	USPAT	OR	OFF	2014/07/14 09:28
S27	14	(("7799072") or ("8002826") or ("7947074")).PN.	US-PGPUB; USPAT; USOCR; EPO; JPO; DERWENT	OR	OFF	2014/07/14 09:28
S28	0	"13706896"	USPAT	OR	OFF	2014/11/30 19:33
S29	1	"13706896"	US-PGPUB; USPAT; USOCR	OR	OFF	2014/11/30 19:33
S30	7	"7799072"	US-PGPUB; USPAT; USOCR	OR	OFF	2014/11/30 19:34
S31	369	(623/2.14).CCLS.	US-PGPUB; USPAT;	OR	OFF	2014/11/30 19:47

			USOCR; JPO; DERWENT			
S32	2,016	a61f2/2412.cpc.	US-PGPUB; USPAT; EPO; JPO; DERWENT	OR	OFF	2014/11/30 19:59
S33	915	a61f2/2475.cpc.	US-PGPUB; USPAT; EPO; JPO; DERWENT	OR	OFF	2014/11/30 19:59
S34	0	a61f2/2418.cpc	US-PGPUB; USPAT; EPO; JPO; DERWENT	OR	OFF	2014/11/30 20:38
S35	2,002	(623/1.35-1.36).CCLS.	US-PGPUB; USPAT; USOCR; EPO; JPO; DERWENT	OR	OFF	2014/12/01 10:28
S39	2,556	a61f2/2412.cpc.	US-PGPUB; USPAT; EPO; JPO; DERWENT	OR	OFF	2016/02/08 10:24
S40	3,379	a61f2/2418.cpc.	US-PGPUB; USPAT; EPO; JPO; DERWENT	OR	OFF	2016/02/08 11:47
S41	2	("13706869").PN.	US-PGPUB; USPAT; USOCR; FPRS; EPO; JPO; DERWENT	OR	OFF	2016/02/08 11:49
S42	2	("13706896").PN.	US-PGPUB; USPAT; USOCR; FPRS; EPO; JPO; DERWENT	OR	OFF	2016/02/08 11:51
S46	1	("14614628").PN.	US-PGPUB; USPAT; USOCR	OR	OFF	2016/03/20 19:27
S47	1	("7799072").PN.	US-PGPUB; USPAT; USOCR	OR	OFF	2017/05/15 06:58
S48	2	("7799072").PN.	US-PGPUB; USPAT;	OR	OFF	2017/05/15 08:28

			EPO; JPO; DERWENT			
S49	4	("20080132993" | "20140336749").PN.	US-PGPUB; USPAT; EPO; JPO; DERWENT	OR	OFF	2017/05/15 08:29
S50	2	("7799072").PN.	US-PGPUB; USPAT; EPO; JPO; DERWENT	OR	OFF	2017/05/15 08:29
S51	0	("14445833").PN.	USPAT; USOCR	OR	OFF	2017/05/15 08:32
S52	18	("20050177222" | "20070067014" | "20100268318" | "6152956" | "20060276883" | "20070112411" | "20030220683" | "20040106981" | "20100094409").PN.	US-PGPUB; USPAT; USOCR; EPO; JPO; DERWENT	OR	OFF	2017/05/15 08:33
S53	651	623/2.14	US-PGPUB; USPAT; EPO; JPO; DERWENT	OR	OFF	2017/05/15 08:35
S54	1	("20070067014").PN.	US-PGPUB; USPAT; USOCR	OR	OFF	2017/09/17 00:05
S55	4,867	a61f2/2418.cpc.	US-PGPUB; USPAT; EPO; JPO; DERWENT	OR	OFF	2017/09/17 00:12
S56	3,429	a61f2/2412.cpc.	US-PGPUB; USPAT; EPO; JPO; DERWENT	OR	OFF	2017/09/17 00:12
S57	2,489	a61f2/2436.cpc.	US-PGPUB; USPAT; EPO; JPO; DERWENT	OR	OFF	2017/09/17 00:13
S58	1,308	a61f2/2433.cpc.	US-PGPUB; USPAT; EPO; JPO; DERWENT	OR	OFF	2017/09/17 00:13
S59	1,182	a61f2/2475.cpc.	US-PGPUB; USPAT; EPO; JPO; DERWENT	OR	OFF	2017/09/17 00:13
S60	1	("14614628").PN.	US-PGPUB; USPAT; USOCR	OR	OFF	2017/09/17 16:01

S61	1	("20070067014").PN.	US-PGPUB; USPAT; USOCR	OR	OFF	2017/09/17 16:11
S62	1	("20080132993").PN.	US-PGPUB; USPAT; USOCR	OR	OFF	2017/09/18 08:47
S63	1,461	carpentier.in.	US-PGPUB; USPAT; USOCR; EPO; JPO; DERWENT	OR	OFF	2018/01/11 08:54
S64	61	carpentier.in. and aorta	US-PGPUB; USPAT; USOCR; EPO; JPO; DERWENT	OR	OFF	2018/01/11 09:32
S65	3	"20050102018"	US-PGPUB; USPAT; USOCR; EPO; JPO; DERWENT	OR	OFF	2018/01/11 09:39
S66	6	(US-20070168013-$ | US-20140172064-$ | US-20140316513-$).DID.	US-PGPUB; USPAT; USOCR; FPRS; EPO; JPO; DERWENT	OR	OFF	2019/02/05 09:13
S67	1	("7799072").PN.	US-PGPUB; USPAT; USOCR	OR	OFF	2019/02/05 09:42
S68	6,135	a61f2/2418.cpc.	US-PGPUB; USPAT; EPO; JPO; DERWENT	OR	OFF	2019/02/05 09:58
S69	4,276	a61f2/2412.cpc.	US-PGPUB; USPAT; EPO; JPO; DERWENT	OR	OFF	2019/02/05 09:58
S70	3,295	a61f2/2436.cpc.	US-PGPUB; USPAT; EPO; JPO; DERWENT	OR	OFF	2019/02/05 09:58
S71	1,674	a61f2/2433.cpc.	US-PGPUB; USPAT; EPO; JPO; DERWENT	OR	OFF	2019/02/05 09:58
S72	1,322	a61f2/2475.cpc.	US-PGPUB; USPAT;	OR	OFF	2019/02/05 09:58

			EPO; JPO; DERWENT			
S73	9,150	S68 S69 S70 S71 S72	US-PGPUB; USPAT; EPO; JPO; DERWENT	OR	OFF	2019/02/05 09:58
S74	6,389	a61f2/2418.cpc.	US-PGPUB; USPAT; EPO; JPO; DERWENT	OR	OFF	2019/04/15 09:04
S75	4,396	a61f2/2412.cpc.	US-PGPUB; USPAT; EPO; JPO; DERWENT	OR	OFF	2019/04/15 09:04
S76	3,436	a61f2/2436.cpc.	US-PGPUB; USPAT; EPO; JPO; DERWENT	OR	OFF	2019/04/15 09:04
S77	1,760	a61f2/2433.cpc.	US-PGPUB; USPAT; EPO; JPO; DERWENT	OR	OFF	2019/04/15 09:04
S78	1,352	a61f2/2475.cpc.	US-PGPUB; USPAT; EPO; JPO; DERWENT	OR	OFF	2019/04/15 09:04
S79	9,503	S74 S75 S76 S77 S78	US-PGPUB; USPAT; EPO; JPO; DERWENT	OR	OFF	2019/04/15 09:04
S80	9,503	S74 S75 S76 S77 S78 S79	US-PGPUB; USPAT; USOCR; FPRS; EPO; JPO; DERWENT	OR	OFF	2019/04/15 09:04
S81	4,461	S80 and (artery arteries)	US-PGPUB; USPAT; USOCR; FPRS; EPO; JPO; DERWENT	OR	ON	2019/04/15 09:06
S82	1,118	S80 and (artery arteries) and (aortic near arch)	US-PGPUB; USPAT; USOCR; FPRS; EPO; JPO; DERWENT	OR	ON	2019/04/15 09:09

S83	6,421	a61f2/2418.cpc.	US-PGPUB; USPAT; EPO; JPO; DERWENT	OR	OFF	2019/04/29 11:05
S84	4,413	a61f2/2412.cpc.	US-PGPUB; USPAT; EPO; JPO; DERWENT	OR	OFF	2019/04/29 11:05
S85	3,462	a61f2/2436.cpc.	US-PGPUB; USPAT; EPO; JPO; DERWENT	OR	OFF	2019/04/29 11:05
S86	1,773	a61f2/2433.cpc.	US-PGPUB; USPAT; EPO; JPO; DERWENT	OR	OFF	2019/04/29 11:05
S87	1,354	a61f2/2475.cpc.	US-PGPUB; USPAT; EPO; JPO; DERWENT	OR	OFF	2019/04/29 11:05
S88	9,549	S83 S84 S85 S86 S87	US-PGPUB; USPAT; EPO; JPO; DERWENT	OR	OFF	2019/04/29 11:05
S89	9,549	S83 S84 S85 S86 S87 S88	US-PGPUB; USPAT; USOCR; FPRS; EPO; JPO; DERWENT	OR	OFF	2019/04/29 11:05
S90	1,126	S89 and (artery arteries) and (aortic near arch)	US-PGPUB; USPAT; USOCR; FPRS; EPO; JPO; DERWENT	OR	ON	2019/04/29 11:05
S91	1	("20090254172").PN.	US-PGPUB; USPAT; USOCR	OR	OFF	2019/05/14 15:40
S92	9	("20060155366" | "20100049313" | "6258117").PN.	US-PGPUB; USPAT; USOCR; FPRS; EPO; JPO; DERWENT	OR	OFF	2019/07/21 10:09
S93	2	("20080262592").PN.	US-PGPUB; USPAT; USOCR;	OR	OFF	2019/07/21 10:10

			FPRS; EPO; JPO; DERWENT			
S94	6	("20070168013" | "20140172064" | "20140316513").PN.	US-PGPUB; USPAT; USOCR; FPRS; EPO; JPO; DERWENT	OR	OFF	2019/07/21 10:10
S95	6	("20020177890" | "5976179").PN.	US-PGPUB; USPAT; USOCR; FPRS; EPO; JPO; DERWENT	OR	OFF	2019/07/21 10:10
S96	3	"20140316513"	US-PGPUB; USPAT; USOCR; FPRS; EPO; JPO; DERWENT	OR	OFF	2019/07/21 10:19
S97	2	"20070168013"	US-PGPUB; USPAT; USOCR; FPRS; EPO; JPO; DERWENT	OR	OFF	2019/07/21 10:20
S98	4	"20140172065"	US-PGPUB; USPAT; USOCR; FPRS; EPO; JPO; DERWENT	OR	OFF	2019/07/21 10:21
S99	6	"20100049313"	US-PGPUB; USPAT; USOCR; FPRS; EPO; JPO; DERWENT	OR	OFF	2019/07/21 10:26
S100	2	"20060155366"	US-PGPUB; USPAT; USOCR; FPRS; EPO; JPO; DERWENT	OR	OFF	2019/07/21 10:29
S101	6,666	a61f2/2418.cpc.	US-PGPUB; USPAT; EPO; JPO; DERWENT	OR	OFF	2019/07/21 10:35

S102	4,593	a61f2/2412.cpc.	US-PGPUB; USPAT; EPO; JPO; DERWENT	OR	OFF	2019/07/21 10:35
S103	3,601	a61f2/2436.cpc.	US-PGPUB; USPAT; EPO; JPO; DERWENT	OR	OFF	2019/07/21 10:35
S104	1,864	a61f2/2433.cpc.	US-PGPUB; USPAT; EPO; JPO; DERWENT	OR	OFF	2019/07/21 10:35
S105	1,380	a61f2/2475.cpc.	US-PGPUB; USPAT; EPO; JPO; DERWENT	OR	OFF	2019/07/21 10:35
S106	9,898	S101 S102 S103 S104 S105	US-PGPUB; USPAT; EPO; JPO; DERWENT	OR	OFF	2019/07/21 10:35
S107	9,898	S101 S102 S103 S104 S105 S106	US-PGPUB; USPAT; USOCR; FPRS; EPO; JPO; DERWENT	OR	OFF	2019/07/21 10:35
S108	1,179	S107 and (artery arteries) and (aortic near arch)	US-PGPUB; USPAT; USOCR; FPRS; EPO; JPO; DERWENT	OR	ON	2019/07/21 10:35
S109	4	"20070067014"	US-PGPUB; USPAT; USOCR; FPRS; EPO; JPO; DERWENT	OR	ON	2019/07/21 11:44
S110	4	"14614628"	US-PGPUB; USPAT; USOCR; FPRS; EPO; JPO; DERWENT	OR	ON	2019/07/21 12:36
S111	7,098	a61f2/2418.cpc.	US-PGPUB; USPAT; EPO; JPO; DERWENT	OR	OFF	2019/12/08 16:15

S112	4,889	a61f2/2412.cpc.	US-PGPUB; USPAT; EPO; JPO; DERWENT	OR	OFF	2019/12/08 16:15
S113	3,856	a61f2/2436.cpc.	US-PGPUB; USPAT; EPO; JPO; DERWENT	OR	OFF	2019/12/08 16:15
S114	1,965	a61f2/2433.cpc.	US-PGPUB; USPAT; EPO; JPO; DERWENT	OR	OFF	2019/12/08 16:15
S115	1,422	a61f2/2475.cpc.	US-PGPUB; USPAT; EPO; JPO; DERWENT	OR	OFF	2019/12/08 16:15
S116	10,508	S111 S112 S113 S114 S115	US-PGPUB; USPAT; EPO; JPO; DERWENT	OR	OFF	2019/12/08 16:15
S117	10,508	S111 S112 S113 S114 S115 S116	US-PGPUB; USPAT; USOCR; FPRS; EPO; JPO; DERWENT	OR	OFF	2019/12/08 16:15
S118	1,256	S117 and (artery arteries) and (aortic near arch)	US-PGPUB; USPAT; USOCR; FPRS; EPO; JPO; DERWENT	OR	ON	2019/12/08 16:15
S120	7,401	a61f2/2418.cpc.	US-PGPUB; USPAT; EPO; JPO; DERWENT	OR	OFF	2020/03/13 11:45
S121	5,076	a61f2/2412.cpc.	US-PGPUB; USPAT; EPO; JPO; DERWENT	OR	OFF	2020/03/13 11:45
S122	4,040	a61f2/2436.cpc.	US-PGPUB; USPAT; EPO; JPO; DERWENT	OR	OFF	2020/03/13 11:45
S123	2,043	a61f2/2433.cpc.	US-PGPUB; USPAT; EPO; JPO; DERWENT	OR	OFF	2020/03/13 11:45

S124	1,443	a61f2/2475.cpc.	US-PGPUB; USPAT; EPO; JPO; DERWENT	OR	OFF	2020/03/13 11:45
S125	10,919	S120 S121 S122 S123 S124	US-PGPUB; USPAT; EPO; JPO; DERWENT	OR	OFF	2020/03/13 11:45
S126	10,919	S120 S121 S122 S123 S124 S125	US-PGPUB; USPAT; USOCR; FPRS; EPO; JPO; DERWENT	OR	OFF	2020/03/13 11:45
S127	1,305	S126 and (artery arteries) and (aortic near arch)	US-PGPUB; USPAT; USOCR; FPRS; EPO; JPO; DERWENT	OR	ON	2020/03/13 11:45
S128	7,401	a61f2/2418.cpc.	US-PGPUB; USPAT; EPO; JPO; DERWENT	OR	OFF	2020/03/13 14:54
S129	5,076	a61f2/2412.cpc.	US-PGPUB; USPAT; EPO; JPO; DERWENT	OR	OFF	2020/03/13 14:54
S130	4,040	a61f2/2436.cpc.	US-PGPUB; USPAT; EPO; JPO; DERWENT	OR	OFF	2020/03/13 14:54
S131	2,043	a61f2/2433.cpc.	US-PGPUB; USPAT; EPO; JPO; DERWENT	OR	OFF	2020/03/13 14:54
S132	1,443	a61f2/2475.cpc.	US-PGPUB; USPAT; EPO; JPO; DERWENT	OR	OFF	2020/03/13 14:54
S133	10,919	S128 S129 S130 S131 S132	US-PGPUB; USPAT; EPO; JPO; DERWENT	OR	OFF	2020/03/13 14:54
S134	10,919	S128 S129 S130 S131 S132 S133	US-PGPUB; USPAT; USOCR; FPRS; EPO;	OR	OFF	2020/03/13 14:54

			JPO; DERWENT			
S135	966	S134 and (stent and artery and seal$4 and arch)	US-PGPUB; USPAT; USOCR; FPRS; EPO; JPO; DERWENT	OR	OFF	2020/03/13 14:56
S136	5,500	A61F2/856.CPC.	US-PGPUB; USPAT; USOCR; FPRS; EPO; JPO; DERWENT	OR	OFF	2020/03/13 19:01
S137	24,545	A61F2/07.CPC.	US-PGPUB; USPAT; USOCR; FPRS; EPO; JPO; DERWENT	OR	OFF	2020/03/13 19:01
S138	15,139	A61F2/2418.CPC.	US-PGPUB; USPAT; USOCR; FPRS; EPO; JPO; DERWENT	OR	OFF	2020/03/13 19:01
S139	16,719	A61F2/82.CPC.	US-PGPUB; USPAT; USOCR; FPRS; EPO; JPO; DERWENT	OR	OFF	2020/03/13 19:01
S140	3,555	A61F2/962.CPC.	US-PGPUB; USPAT; USOCR; FPRS; EPO; JPO; DERWENT	OR	OFF	2020/03/13 19:01
S141	11,168	A61F2/89.CPC.	US-PGPUB; USPAT; USOCR; FPRS; EPO; JPO; DERWENT	OR	OFF	2020/03/13 19:01
S142	1,881	(S136 S137 S138 S139 S140 S141) and (stent and artery and seal$4 and arch)	US-PGPUB; USPAT; USOCR; FPRS; EPO;	OR	OFF	2020/03/13 19:02

			JPO; DERWENT			
S143	1	("9044311").PN.	US-PGPUB; USPAT; USOCR	OR	OFF	2020/03/13 20:21
S144	25	(US-10034784-$ | US-10065824-$ | US-16788806-$ | US-19857887-$ | US-20010044650-$ | US-20020082684-$ | US-20040249399-$ | US-20070219613-$ | US-20090036977-$ | US-20090099650-$ | US-20100087907-$ | US-20130013050-$ | US-3002816-$ | US-3025694-$ | US-3220613-$ | US-3289282-$ | US-3482228-$ | US-3506622-$ | US-3545549-$ | US-3562673-$ | US-3652198-$ | US-3715337-$ | US-3757263-$ | US-5464721-$ | US-5609627-$ | US-5773457-$ | US-5814752-$).DID.	US-PGPUB; USPAT	OR	OFF	2020/03/13 21:45
S145	0	(DE-10065824-$ | DE-19857887-$ | AI-20010044650-$ | AI-20020082684-$ | AI-20040249399-$ | AI-20070219613-$ | AI-20090036977-$ | AI-20090099650-$ | AI-20100087907-$ | AI-20130013050-$ | NO-2013040663-$ | NO-2013059596-$ | NO-2014072501-$ | BI-3482228-$ | VA-223131450-$).DID.	US-PGPUB; USPAT	OR	OFF	2020/03/13 21:46
S146	0	"16788806"	US-PGPUB; USPAT	OR	OFF	2020/03/13 21:47
S147	1	("20080132993").PN.	US-PGPUB; USPAT; USOCR	OR	OFF	2020/04/11 20:50
S148	4	"20070067014"	US-PGPUB; USPAT; USOCR; FPRS; EPO; JPO; DERWENT	OR	OFF	2020/04/13 10:30
S149	5	"20080132993"	US-PGPUB; USPAT; USOCR; FPRS; EPO; JPO; DERWENT	OR	OFF	2020/04/13 11:39
S150	14	"13706896"	US-PGPUB; USPAT; USOCR; FPRS; EPO;	OR	OFF	2020/04/13 12:11

			JPO; DERWENT			
S151	1	"16788806"	US-PGPUB; USPAT; USOCR; FPRS; EPO; JPO; DERWENT	OR	OFF	2020/04/13 12:11
S152	15	(US-10478320-$ | US-16788806-$ | US-20050010277-$ | US-20080082159-$ | US-20090264993-$ | US-3226814-$ | US-3402751-$ | US-3408731-$ | US-3574284-$).DID.	US-PGPUB; USPAT; USOCR; FPRS; EPO; JPO; DERWENT	OR	OFF	2020/04/13 14:46
S153	13	(US-16788806-$ | US-20040230287-$ | US-20080275548-$ | US-20110257731-$ | US-20120158121-$ | US-3125764-$ | US-3314328-$ | US-3668892-$).DID.	US-PGPUB; USPAT; USOCR; FPRS; EPO; JPO; DERWENT	OR	OFF	2020/04/13 14:46
S154	0	(AI-20040230287-$ | AI-20080275548-$ | AI-20110257731-$ | AI-20120158121-$ | VA-223131450-$).DID.	US-PGPUB; USPAT; USOCR; FPRS; EPO; JPO; DERWENT	OR	OFF	2020/04/13 14:47
S155	3,758	623/1.12	US-PGPUB; USPAT	OR	OFF	2020/06/06 14:43
S156	51	S155 and ((fibers with collagen))	US-PGPUB; USPAT	OR	OFF	2020/06/06 14:43
S157	7,650	a61f2/2418.cpc.	US-PGPUB; USPAT; EPO; JPO; DERWENT	OR	OFF	2020/06/06 14:43
S158	5,220	a61f2/2412.cpc.	US-PGPUB; USPAT; EPO; JPO; DERWENT	OR	OFF	2020/06/06 14:43
S159	4,196	a61f2/2436.cpc.	US-PGPUB; USPAT; EPO; JPO; DERWENT	OR	OFF	2020/06/06 14:43
S160	2,120	a61f2/2433.cpc.	US-PGPUB; USPAT; EPO; JPO; DERWENT	OR	OFF	2020/06/06 14:43
S161	1,463	a61f2/2475.cpc.	US-PGPUB; USPAT;	OR	OFF	2020/06/06 14:43

			EPO; JPO; DERWENT			
S162	11,262	S157 S158 S159 S160 S161	US-PGPUB; USPAT; EPO; JPO; DERWENT	OR	OFF	2020/06/06 14:44
S163	282	S162 and ((fibers with collagen))	US-PGPUB; USPAT	OR	OFF	2020/06/06 14:44
S164	1	"20040256759"	US-PGPUB; USPAT	OR	OFF	2020/06/06 15:28
S165	119	(US-10028848-$ | US-10034784-$ | US-10065824-$ | US-10321985-$ | US-16808137-$ | US-18153473-$ | US-19857887-$ | US-2858390-$ | US-20010044650-$ | US-20020082684-$ | US-20020177890-$ | US-20030040771-$ | US-20040210304-$ | US-20040249399-$ | US-20050043790-$ | US-20050197687-$ | US-20060149351-$ | US-20060155366-$ | US-20070067014-$ | US-20070095283-$ | US-20070168013-$ | US-20070203559-$ | US-20070219613-$ | US-20070250146-$ | US-20070276464-$ | US-20080132993-$ | US-20080132999-$ | US-20080262592-$ | US-20080275548-$ | US-20090036977-$ | US-20090099644-$ | US-20090099650-$ | US-20090125098-$ | US-20090171456-$ | US-20090198315-$ | US-20090312834-$ | US-20100042202-$ | US-20100049313-$ | US-20100087907-$ | US-20100094409-$ | US-20110257731-$ | US-20120046726-$ | US-20120089218-$ | US-20130013050-$ | US-20130144373-$ | US-20140046428-$ | US-20140172064-$ | US-20140316513-$ | US-20140336749-$ | US-20160022450-$ | US-20160270935-$ | US-20170209254-$ | US-2787925-$ | US-3002816-$ | US-3002826-$ | US-3005270-$ | US-3016877-$ | US-3021408-$ | US-3025694-$ | US-3034007-$ | US-3095343-$ | US-3102417-$ | US-3114001-$ | US-3157174-$ | US-3179931-$ | US-3206438-$ | US-3220613-$ | US-3220899-$ | US-3226710-$ | US-3258117-$ | US-3269739-$ | US-3289282-$ | US-3314324-$ | US-3358140-$ | US-	US-PGPUB; USPAT	OR	OFF	2020/06/06 16:05

		3393021-$ | US-3393136-$ | US-3394119-$ | US-3397355-$ | US-3398701-$ | US-3414635-$ | US-3419788-$ | US-3425584-$ | US-3452070-$ | US-3482228-$ | US-3506622-$ | US-3545549-$ | US-3561102-$ | US-3562673-$ | US-3582462-$ | US-3603156-$ | US-3617234-$ | US-3623067-$ | US-3629739-$ | US-3652198-$ | US-3715317-$ | US-3715337-$ | US-3721676-$ | US-3757263-$ | US-3833341-$ | US-3864808-$ | US-3911490-$ | US-3940040-$ | US-3943427-$ | US-3976179-$ | US-5004346-$ | US-5061275-$ | US-5254632-$ | US-5334868-$ | US-5464721-$ | US-5609627-$ | US-5716393-$ | US-5718159-$ | US-5752829-$ | US-5773457-$ | US-5814752-$ | US-5918925-$ | US-5957974-$ | US-7018404-$ | US-7771467-$ | US-7799072-$ | US-7914569-$ | US-D187180-$).DID.				
S166	15	(DE-10065824-$ | DN-102014805-$ | DE-19857887-$ | AI-20010044650-$ | AI-20020082684-$ | AI-20020177890-$ | AI-20030040771-$ | AI-20040210304-$ | AI-20040249399-$ | NO-2004089249-$ | AI-20050043790-$ | AI-20050197687-$ | NO-2005087117-$ | AI-20060149351-$ | AI-20060155366-$ | NO-2006127412-$ | AI-20070067014-$ | AI-20070095283-$ | AI-20070168013-$ | AI-20070203559-$ | AI-20070219613-$ | AI-20070250146-$ | AI-20070276464-$ | AI-20080132993-$ | AI-20080132999-$ | AI-20080262592-$ | AI-20080275548-$ | AI-20090036977-$ | AI-20090099644-$ | AI-20090099650-$ | AI-20090125098-$ | AI-20090171456-$ | AI-20090198315-$ | AI-20090312834-$ | AI-20100042202-$ | AI-20100049313-$ | NO-2010006627-$ | AI-20100087907-$ | AI-20100094409-$ | NO-2010031060-$ | NO-2010105195-$ | AI-20110257731-$ | NO-2011035154-$ | JP-2011502628-$ | JP-2011507658-$ | AI-20120046726-$ | AI-20120089218-$ | NO-2012147675-$ | AI-20130013050-$ | AI-20130144373-$ | NO-	US-PGPUB; USPAT; USOCR; FPRS; EPO; DERWENT	OR	OFF	2020/06/06 16:05

		2013040663-$ | NO-2013059596-$ | NO-2013086132-$ | AI-20140046428-$ | AI-20140172064-$ | AI-20140316513-$ | AI-20140336749-$ | NO-2014072501-$ | AI-20160022450-$ | AI-20160270935-$ | AI-20170209254-$ | EP-2787925-$ | BI-3482228-$ | BI-3582462-$ | BI-5254632-$ | BI-5334868-$ | JS-2012068165-$).DID.				
S167	34	(US-16808137-$ | US-20020052649-$ | US-20040243221-$ | US-20040256759-$ | US-20070179591-$ | US-20070213815-$ | US-20070219620-$ | US-20080021547-$ | US-20090105805-$ | US-20100204781-$ | US-20120123529-$ | US-20120296418-$ | US-20130090729-$ | US-3370418-$ | US-5663667-$ | US-5665117-$ | US-5824037-$ | US-20130144373-$).DID.	US-PGPUB; USPAT; USOCR; FPRS; EPO; DERWENT	OR	OFF	2020/06/06 16:07
S168	1	(AI-20020052649-$ | AI-20040243221-$ | AI-20040256759-$ | JP-2005124959-$ | NO-2006005015-$ | AI-20070179591-$ | AI-20070213815-$ | AI-20070219620-$ | AI-20080021547-$ | AI-20090105805-$ | AI-20100204781-$ | AI-20120123529-$ | AI-20120296418-$ | AI-20130090729-$ | VA-223131450-$).DID.	US-PGPUB; USPAT; USOCR; FPRS; EPO; DERWENT	OR	OFF	2020/06/06 16:07
S169	6	((frame with (inner and outer) same seal$4) same graft) and (heart with valve)	US-PGPUB; USPAT	OR	OFF	2020/06/06 16:53
S170	7	((frame same (inner and outer) same seal$4) same graft) and (heart with valve)	US-PGPUB; USPAT	OR	OFF	2020/06/06 17:50
S171	1	("9370419").PN.	US-PGPUB; USPAT; USOCR	OR	OFF	2020/06/06 19:30
S172	627	("20010039450" | "20020013571" | "20020026216" | "20020082630" | "20020107565" | "20020123802" | "20020151970" | "20020183835" | "20020183838" | "20020188348" | "20020198594" | "20030023303" | "20030050694" | "20030078652" | "20030130729" | "20030153943" | "20030163194" | "20030167071" | "20030171806" | "20030199975" | "20030229394" | "20030229395" | "20030233142" | "20030236568" | "20030236569" | "20040002719" |	US-PGPUB; USPAT; USOCR	OR	OFF	2020/06/06 19:31

		"20040003819" | "20040010305" | "20040015230" | "20040015232" | "20040015233" | "20040019374" | "20040019377" | "20040019378" | "20040024447" | "20040024451" | "20040024452" | "20040030321" | "20040030381" | "20040030382" | "20040030405" | "20040034380" | "20040034411" | "20040039436" | "20040039442" | "20040039443" | "20040044350" | "20040044365" | "20040044403" | "20040049207" | "20040049211" | "20040049266" | "20040059351" | "20040059411" | "20040059412" | "20040060161" | "20040073301" | "20040073302" | "20040078072" | "20040078074" | "20040082910" | "20040082923" | "20040082991" | "20040087975" | "20040088045" | "20040088046" | "20040092858" | "20040093060" | "20040093070" | "20040093080" | "20040097979" | "20040098098" | "20040098112" | "20040102839" | "20040102840" | "20040102842" | "20040106976" | "20040106990" | "20040106991" | "20040111096" | "20040117009" | "20040122448" | "20040122512" | "20040122513" | "20040122514" | "20040122515" | "20040122516" | "20040127979" | "20040127980" | "20040127981" | "20040127982" | "20040133220" | "20040133267").PN. OR ("20040133273" | "20040138742" | "20040138743" | "20040138744" | "20040138745" | "20040148018" | "20040148019" | "20040148020" | "20040153052" | "20040153146" | "20040153147" | "20040158321" | "20040162610" | "20040167539" | "20040167620" | "20040172046" | "20040176839" | "20040176840" | "20040181238" | "20040186444" | "20040186558" | "20040186561" | "20040186563" | "20040186565" | "20040186566" | "20040193191" | "20040193253" | "20040193260" | "20040199155" | "20040199183" | "20040199191" | "20040204758" | "20040206363" | "20040210240" | "20040210301" | "20040210303" | "20040210304" | "20040210305" |				

		"20040210306" | "20040210307" | "20040215333" | "20040215339" | "20040220654" | "20040220657" | "20040225322" | "20040225344" | "20040225348" | "20040225352" | "20040225353" | "20040225354" | "20040225355" | "20040225356" | "20040230117" | "20040230297" | "20040236411" | "20040236418" | "20040236419" | "20040243153" | "20040243219" | "20040243227" | "20040243228" | "20040243230" | "20040254600" | "20040254636" | "20040260276" | "20040260317" | "20040260322" | "20040260389" | "20040260390" | "20040260393" | "20040260394" | "20040267357" | "20050004583" | "20050004667" | "20050010285" | "20050010287" | "20050015112" | "20050021056" | "20050021136" | "20050027261" | "20050027348" | "20050027351" | "20050027353" | "20050033398" | "20050033419" | "20050033446" | "20050038506" | "20050038507" | "20050043790" | "20050043792" | "20050049679" | "20050049692" | "20050049696").PN. OR ("20050049697" | "20050054977" | "20050055079" | "20050055087" | "20050055088" | "20050055089" | "20050060029" | "20050060030" | "20050065460" | "20050065550" | "20050065594" | "20050065597" | "20050070998" | "20050075584" | "20050075659" | "20050075662" | "20050075712" | "20050075713" | "20050075717" | "20050075718" | "20050075719" | "20050075720" | "20050075723" | "20050075724" | "20050075725" | "20050075726" | "20050075729" | "20050075730" | "20050075731" | "20050080483" | "20050085900" | "20050085903" | "20050085904" | "20050090846" | "20050096735" | "20050096738" | "20050096739" | "20050096740" | "20050101975" | "20050102026" | "20050107810" | "20050107811" | "20050107812" | "20050107872" | "20050113910" | "20050119673" | "20050119734" | "20050119735" | "20050125011" | "20050131438" |				

		"20050137449" | "20050137450" | "20050137451" | "20050137676" | "20050137681" | "20050137682" | "20050137685" | "20050137686" | "20050137688" | "20050137689" | "20050137690" | "20050137691" | "20050137692" | "20050137693" | "20050137694" | "20050137696" | "20050137697" | "20050137698" | "20050137699" | "20050137700" | "20050137701" | "20050137702" | "20050143807" | "20050143809" | "20050143810" | "20050143811" | "20050149014" | "20050149179" | "20050149180" | "20050149181" | "20050159810" | "20050159811" | "20050165477" | "20050165478" | "20050171472" | "20050171601" | "20050177227" | "20050177228" | "20050182483" | "20050184122" | "20050187614" | "20050187616" | "20050187617").PN. OR ("20050192606" | "20050192665" | "20050197692" | "20050197693" | "20050197694" | "20050203549" | "20050203605" | "20050203614" | "20050203615" | "20050203616" | "20050203617" | "20050203618" | "20050216039" | "20050216077" | "20050216078" | "20050222675" | "20050222678" | "20050228422" | "20050228479" | "20050228486" | "20050228494" | "20050228495" | "20050228496" | "20050234541" | "20050234546" | "20050240200" | "20050240202" | "20050240255" | "20050240259" | "20050240262" | "20050244460" | "20050246013" | "20050251251" | "20050256566" | "20050261704" | "20050261759" | "20050267493" | "20050267560" | "20050267565" | "20050267571" | "20050267573" | "20050267574" | "20050272969" | "20050273160" | "20050278015" | "20050283178" | "20050288779" | "20060000715" | "20060004439" | "20060004442" | "20060009841" | "20060009842" | "20060013805" | "20060013855" | "20060015136" | "20060015178" | "20060015179" | "20060020275" | "20060020327" | "20060020332" | "20060020334" | "20060020335" |				

		"20060020336" | "20060025750" | "20060025784" | "20060025787" | "20060025854" | "20060025855" | "20060025856" | "20060025857" | "20060030747" | "20060030866" | "20060030882" | "20060030885" | "20060036317" | "20060041305" | "20060041306" | "20060047297" | "20060047338" | "20060047343" | "20060052804" | "20060052867" | "20060058817" | "20060058865" | "20060058871" | "20060058889" | "20060064115" | "20060064116" | "20060064118" | "20060064174" | "20060069400" | "20060069430" | "20060074483").PN. OR ("20060074484" | "20060074485" | "20060085060" | "20060089708" | "20060095115" | "20060095125" | "20060099326" | "20060100697" | "20060100699" | "20060106278" | "20060106279" | "20060106456" | "20060111660" | "20060111773" | "20060111774" | "20060116572" | "20060116756" | "20060122686" | "20060122692" | "20060122693" | "20060127443" | "20060129235" | "20060129236" | "20060135476" | "20060135964" | "20060135967" | "20060136044" | "20060136045" | "20060136052" | "20060136054" | "20060142846" | "20060142847" | "20060142848" | "20060142854" | "20060149358" | "20060149360" | "20060149367" | "20060149368" | "20060161133" | "20060161248" | "20060161250" | "20060167468" | "20060167541" | "20060167542" | "20060167543" | "3671979" | "4291420" | "4787901" | "4872874" | "4935030" | "4994077" | "5002567" | "5141491" | "5163953" | "5219355" | "5254127" | "5327774" | "5332402" | "5370685" | "5411552" | "5469868" | "5480423" | "5500014" | "5545214" | "5554185" | "5643208" | "5693087" | "5713953" | "5716370" | "5735859" | "5741326" | "5741333" | "5800506" | "5824061" | "5879320" | "5895419" | "5910170" | "6010531" | "6042607" | "6139575" | "6287334" | "6312447" | "6355030" | "6402780" | "6419696" | "6425916" | "6440164" | "6451054" |				

		"6454799" | "6461366" | "6503272" | "6508833" | "6564805" | "6569196" | "6602286" | "6629534" | "6635085" | "6666885" | "6666886" | "6669725" | "6673109" | "6676698" | "6676702" | "6682558" | "6682559" | "6685739" | "6692512" | "6695866" | "6695878" | "6709456").PN. OR ("6709457" | "6716241" | "6716244" | "6719767" | "6719784" | "6719786" | "6719787" | "6719788" | "6719789" | "6719790" | "6723038" | "6723122" | "6723123" | "6726715" | "6726716" | "6726717" | "6730118" | "6730121" | "6730122" | "6736845" | "6736846" | "6749630" | "6752813" | "6752828" | "6755857" | "6761734" | "6761735" | "6764494" | "6764508" | "6764509" | "6764510" | "6767362" | "6769434" | "6770083" | "6780200" | "6786924" | "6786925" | "6790229" | "6790230" | "6790231" | "6793673" | "6797000" | "6797001" | "6797002" | "6802860" | "6805710" | "6805711" | "6810882" | "6821297" | "6824562" | "6830584" | "6830585" | "6837902" | "6840246" | "6840957" | "6846324" | "6846325" | "6858039" | "6869444" | "6872226" | "6875224" | "6875230" | "6875231" | "6881199" | "6881224" | "6883522" | "6890352" | "6890353" | "6893459" | "6893460" | "6896700" | "6902576" | "6908478" | "6908481" | "6911043" | "6913608" | "6916338" | "6918917" | "6921407" | "6921811" | "6926715" | "6926730" | "6929653" | "6932838" | "6936067" | "6939359" | "6942694" | "6945957" | "6945978" | "6945996" | "6945997" | "6949122" | "6951571" | "6951573" | "6955689" | "6958076" | "6962605" | "6964682" | "6964683" | "6964684" | "6966925" | "6966926" | "6974464" | "6974474" | "6974476" | "6976995" | "6979350" | "6986775" | "6989027" | "6989028" | "6997950" | "6997951" | "7004176" | "7007396" | "7011669" | "7011681" | "7011682" | "7018406" | "7018407" | "7018408" | "7022134" | "7025780" | "7033390" | "7037333" | "7037334").PN. OR ("7041128" | "7041132" | "7044966" | "7044967" | "7048754" | "7048757" | "7052487" | "7052507" | "7063722" | "7066954" |				

		"7070616" | "7077862" | "7081131" | "7087064" | "7089051" | "7090695" | "7195641").PN. OR ("9370419").URPN.				
S173	171	S172 and fiber$4	US-PGPUB; USPAT; USOCR	OR	OFF	2020/06/06 19:32
S174	3,550	a61f2/2409.cpc.	US-PGPUB; USPAT; EPO; JPO; DERWENT	OR	OFF	2020/06/06 21:44

6/7/2020 10:41:06 AM
C:\Users\tshipmon\Documents\EAST\Workspaces\13706896.wsp

Doc code: IDS
Doc description: Information Disclosure Statement (IDS) Filed

PTO/SB/08a (02-18)
Approved for use through 11/30/2020. OMB 0651-0031
U.S. Patent and Trademark Office; U.S. DEPARTMENT OF COMMERCE
Under the Paperwork Reduction Act of 1995, no persons are required to respond to a collection of information unless it contains a valid OMB control number.

INFORMATION DISCLOSURE STATEMENT BY APPLICANT

(Not for submission under 37 CFR 1.99)

Application Number	16808137
Filing Date	2020-03-03
First Named Inventor	Ali Shahriari
Art Unit	3774
Examiner Name	-
Attorney Docket Number	426/2/9 UTIL

U.S.PATENTS Remove

Examiner Initial*	Cite No	Patent Number	Kind Code[1]	Issue Date	Name of Patentee or Applicant of cited Document	Pages,Columns,Lines where Relevant Passages or Relevant Figures Appear
	1	5665117		1997-09-09	Rhodes	
	2	5824037		1998-10-20	Fogarty et al.	
	3	6663667		2003-12-16	Dehdashtian et al.	
	4	7175652		2007-02-13	Cook et al.	
	5	7470284		2008-12-30	Lambrecht et al.	
	6	7740656		2010-06-22	Mensah et al.	
	7	7972370		2011-07-05	Douk et al.	
	8	9370418		2016-06-21	Pintor et al.	

If you wish to add additional U.S. Patent citation information please click the Add button. Add

ALL REFERENCES CONSIDERED EXCEPT WHERE LINED THROUGH. /T.P.S/

INFORMATION DISCLOSURE STATEMENT BY APPLICANT (Not for submission under 37 CFR 1.99)		
	Application Number	16808137
	Filing Date	2020-03-03
	First Named Inventor	Ali Shahriari
	Art Unit	3774
	Examiner Name	-
	Attorney Docket Number	426/2/9 UTIL

U.S.PATENT APPLICATION PUBLICATIONS						Remove
Examiner Initial*	Cite No	Publication Number	Kind Code[1]	Publication Date	Name of Patentee or Applicant of cited Document	Pages,Columns,Lines where Relevant Passages or Relevant Figures Appear
	1	20020052649	A1	2002-05-02	Greenhalgh	
	2	20040243221	A1	2004-12-02	Fawzi Natalie V. et al.	
	3	20040256759	A1	2004-12-23	Hartley	
	4	20070179591	A1	2007-08-02	Baker et al.	
	5	20070213815	A1	2007-09-13	Khairkhahan et al.	
	6	20070219620	A1	2007-09-20	Eells et al.	
	7	20080021547	A1	2008-01-24	Davidson	
	8	20090105805	A1	2009-04-23	Baker et al.	
	9	20100204781	A1	2010-08-12	Alkhatib	

EFS Web 2.1.18

ALL REFERENCES CONSIDERED EXCEPT WHERE LINED THROUGH. /T.P.S/

INFORMATION DISCLOSURE STATEMENT BY APPLICANT (Not for submission under 37 CFR 1.99)		
	Application Number	16808137
	Filing Date	2020-03-03
	First Named Inventor	Ali Shahriari
	Art Unit	3774
	Examiner Name	-
	Attorney Docket Number	426/2/9 UTIL

	10	20120123529	A1	2012-05-17	Levi et al.	
	11	20120296418	A1	2012-11-22	Bonyuet et al.	
	12	20120123529	A1	2012-05-17	Levi et al	
	13	20130090729	A1	2013-04-11	Gregg et al.	

If you wish to add additional U.S. Published Application citation information please click the Add button. Add

FOREIGN PATENT DOCUMENTS Remove

Examiner Initial*	Cite No	Foreign Document Number[3]	Country Code[2]¡	Kind Code[4]	Publication Date	Name of Patentee or Applicant of cited Document	Pages,Columns,Lines where Relevant Passages or Relevant Figures Appear	T[5]
	1	2005124959	JP	A	2005-05-19	Noisshiki et al.		
	2	2006005015	WO	A2	2006-01-12	Spenser et al.		

If you wish to add additional Foreign Patent Document citation information please click the Add button Add

NON-PATENT LITERATURE DOCUMENTS Remove

Examiner Initials*	Cite No	Include name of the author (in CAPITAL LETTERS), title of the article (when appropriate), title of the item (book, magazine, journal, serial, symposium, catalog, etc), date, pages(s), volume-issue number(s), publisher, city and/or country where published.	T[5]
	1	INTENTUS GROUP, Invalidity Search Report, STENT SEAL (US20130144373), March 30, 2020, Pgs. 1-15	

If you wish to add additional non-patent literature document citation information please click the Add button Add

EFS Web 2.1.18

ALL REFERENCES CONSIDERED EXCEPT WHERE LINED THROUGH. /T.P.S/

INFORMATION DISCLOSURE STATEMENT BY APPLICANT (Not for submission under 37 CFR 1.99)		
	Application Number	16808137
	Filing Date	2020-03-03
	First Named Inventor	Ali Shahriari
	Art Unit	3774
	Examiner Name	-
	Attorney Docket Number	426/2/9 UTIL

EXAMINER SIGNATURE			
Examiner Signature	/TIFFANY P SHIPMON/	Date Considered	06/08/2020

*EXAMINER: Initial if reference considered, whether or not citation is in conformance with MPEP 609. Draw line through a citation if not in conformance and not considered. Include copy of this form with next communication to applicant.

[1] See Kind Codes of USPTO Patent Documents at www.USPTO.GOV or MPEP 901.04. [2] Enter office that issued the document, by the two-letter code (WIPO Standard ST.3). [3] For Japanese patent documents, the indication of the year of the reign of the Emperor must precede the serial number of the patent document. [4] Kind of document by the appropriate symbols as indicated on the document under WIPO Standard ST.16 if possible. [5] Applicant is to place a check mark here if English language translation is attached.

ALL REFERENCES CONSIDERED EXCEPT WHERE LINED THROUGH. /T.P.S/

INFORMATION DISCLOSURE STATEMENT BY APPLICANT (Not for submission under 37 CFR 1.99)		
	Application Number	16808137
	Filing Date	2020-03-03
	First Named Inventor	Ali Shahriari
	Art Unit	3774
	Examiner Name	-
	Attorney Docket Number	426/2/9 UTIL

CERTIFICATION STATEMENT

Please see 37 CFR 1.97 and 1.98 to make the appropriate selection(s):

That each item of information contained in the information disclosure statement was first cited in any communication from a foreign patent office in a counterpart foreign application not more than three months prior to the filing of the information disclosure statement. See 37 CFR 1.97(e)(1).

OR

☐ That no item of information contained in the information disclosure statement was cited in a communication from a foreign patent office in a counterpart foreign application, and, to the knowledge of the person signing the certification after making reasonable inquiry, no item of information contained in the information disclosure statement was known to any individual designated in 37 CFR 1.56(c) more than three months prior to the filing of the information disclosure statement. See 37 CFR 1.97(e)(2).

See attached certification statement.

The fee set forth in 37 CFR 1.17 (p) has been submitted herewith.

X A certification statement is not submitted herewith.

SIGNATURE

A signature of the applicant or representative is required in accordance with CFR 1.33, 10.18. Please see CFR 1.4(d) for the form of the signature.

Signature	/Justin R. Nifong/	Date (YYYY-MM-DD)	2020-04-06
Name/Print	Justin R. Nifong	Registration Number	59389

This collection of information is required by 37 CFR 1.97 and 1.98. The information is required to obtain or retain a benefit by the public which is to file (and by the USPTO to process) an application. Confidentiality is governed by 35 U.S.C. 122 and 37 CFR 1.14. This collection is estimated to take 1 hour to complete, including gathering, preparing and submitting the completed application form to the USPTO. Time will vary depending upon the individual case. Any comments on the amount of time you require to complete this form and/or suggestions for reducing this burden, should be sent to the Chief Information Officer, U.S. Patent and Trademark Office, U.S. Department of Commerce, P.O. Box 1450, Alexandria, VA 22313-1450. DO NOT SEND FEES OR COMPLETED FORMS TO THIS ADDRESS. **SEND TO: Commissioner for Patents, P.O. Box 1450, Alexandria, VA 22313-1450.**

Privacy Act Statement

The Privacy Act of 1974 (P.L. 93-579) requires that you be given certain information in connection with your submission of the attached form related to a patent application or patent. Accordingly, pursuant to the requirements of the Act, please be advised that: (1) the general authority for the collection of this information is 35 U.S.C. 2(b)(2); (2) furnishing of the information solicited is voluntary; and (3) the principal purpose for which the information is used by the U.S. Patent and Trademark Office is to process and/or examine your submission related to a patent application or patent. If you do not furnish the requested information, the U.S. Patent and Trademark Office may not be able to process and/or examine your submission, which may result in termination of proceedings or abandonment of the application or expiration of the patent.

The information provided by you in this form will be subject to the following routine uses:

1. The information on this form will be treated confidentially to the extent allowed under the Freedom of Information Act (5 U.S.C. 552) and the Privacy Act (5 U.S.C. 552a). Records from this system of records may be disclosed to the Department of Justice to determine whether the Freedom of Information Act requires disclosure of these record s.

2. A record from this system of records may be disclosed, as a routine use, in the course of presenting evidence to a court, magistrate, or administrative tribunal, including disclosures to opposing counsel in the course of settlement negotiations.

3. A record in this system of records may be disclosed, as a routine use, to a Member of Congress submitting a request involving an individual, to whom the record pertains, when the individual has requested assistance from the Member with respect to the subject matter of the record.

4. A record in this system of records may be disclosed, as a routine use, to a contractor of the Agency having need for the information in order to perform a contract. Recipients of information shall be required to comply with the requirements of the Privacy Act of 1974, as amended, pursuant to 5 U.S.C. 552a(m).

5. A record related to an International Application filed under the Patent Cooperation Treaty in this system of records may be disclosed, as a routine use, to the International Bureau of the World Intellectual Property Organization, pursuant to the Patent Cooperation Treaty.

6. A record in this system of records may be disclosed, as a routine use, to another federal agency for purposes of National Security review (35 U.S.C. 181) and for review pursuant to the Atomic Energy Act (42 U.S.C. 218(c)).

7. A record from this system of records may be disclosed, as a routine use, to the Administrator, General Services, or his/her designee, during an inspection of records conducted by GSA as part of that agency's responsibility to recommend improvements in records management practices and programs, under authority of 44 U.S.C. 2904 and 2906. Such disclosure shall be made in accordance with the GSA regulations governing inspection of records for this purpose, and any other relevant (i.e., GSA or Commerce) directive. Such disclosure shall not be used to make determinations about individuals.

8. A record from this system of records may be disclosed, as a routine use, to the public after either publication of the application pursuant to 35 U.S.C. 122(b) or issuance of a patent pursuant to 35 U.S.C. 151. Further, a record may be disclosed, subject to the limitations of 37 CFR 1.14, as a routine use, to the public if the record was filed in an application which became abandoned or in which the proceedings were terminated and which application is referenced by either a published application, an application open to public inspections or an issued patent.

9. A record from this system of records may be disclosed, as a routine use, to a Federal, State, or local law enforcement agency, if the USPTO becomes aware of a violation or potential violation of law or regulation.

COMMUNICATION TO THE UNITED STATES PATENT AND TRADEMARK OFFICE

Application No.	:	16/808,137	Confirmation No.:	1706
Applicant	:	Aortic Innovations, LLC		
First Named Inventor	:	Ali Shahriari		
Filing Date	:	Mar 3, 2020		
TC/A.U.	:	3774		
Examiner	:	Tiffany Shipmon		
Docket No.	:	426/2/9 UTIL		
Customer No.	:	115007		

Title of Invention: DEVICE FOR ENDOVASCULAR AORTIC REPAIR AND METHOD OF USING THE SAME

Via EFS-Web
Commissioner for Patents
P.O. Box 1450
Alexandria, VA 22313-1450

AMENDMENT AFTER ALLOWANCE

Commissioner:

This is responsive to the Notice of Allowance dated June 18, 2020. Applicant is submitting a title and abstract amendment to more appropriately correct the claimed subject matter.

Amendments to the title are reflected on page 2 and with the being submitted replacement ADS.

Amendments to the abstract are reflected on page 3.

Remarks begin on page 4.

Electronic Acknowledgement Receipt

EFS ID:	39754419
Application Number:	16808137
International Application Number:	
Confirmation Number:	1706
Title of Invention:	DEVICE FOR ENDOVASCULAR AORTIC REPAIR AND METHOD OF USING THE SAME
First Named Inventor/Applicant Name:	Ali Shahriari
Customer Number:	115007
Filer:	Justin Robert Nifong
Filer Authorized By:	
Attorney Docket Number:	426/2/9 UTIL
Receipt Date:	18-JUN-2020
Filing Date:	03-MAR-2020
Time Stamp:	07:22:51
Application Type:	Utility under 35 USC 111(a)

Payment information:

Submitted with Payment	no

File Listing:

Document Number	Document Description	File Name	File Size(Bytes)/ Message Digest	Multi Part /.zip	Pages (if appl.)
1		426-2-9UTIL-remarks-after-allowance.pdf	191596 794c514c076aea860c51db8ca46ba7c66a113813	yes	4

	Multipart Description/PDF files in .zip description		
	Document Description	**Start**	**End**
	Applicant Arguments/Remarks Made in an Amendment	4	4
	Specification	2	3
	Amendment after Notice of Allowance (Rule 312)	1	1
Warnings:			
Information:			
	Total Files Size (in bytes):	191596	

This Acknowledgement Receipt evidences receipt on the noted date by the USPTO of the indicated documents, characterized by the applicant, and including page counts, where applicable. It serves as evidence of receipt similar to a Post Card, as described in MPEP 503.

<u>New Applications Under 35 U.S.C. 111</u>
If a new application is being filed and the application includes the necessary components for a filing date (see 37 CFR 1.53(b)-(d) and MPEP 506), a Filing Receipt (37 CFR 1.54) will be issued in due course and the date shown on this Acknowledgement Receipt will establish the filing date of the application.
<u>National Stage of an International Application under 35 U.S.C. 371</u>
If a timely submission to enter the national stage of an international application is compliant with the conditions of 35 U.S.C. 371 and other applicable requirements a Form PCT/DO/EO/903 indicating acceptance of the application as a national stage submission under 35 U.S.C. 371 will be issued in addition to the Filing Receipt, in due course.
<u>New International Application Filed with the USPTO as a Receiving Office</u>
If a new international application is being filed and the international application includes the necessary components for an international filing date (see PCT Article 11 and MPEP 1810), a Notification of the International Application Number and of the International Filing Date (Form PCT/RO/105) will be issued in due course, subject to prescriptions concerning national security, and the date shown on this Acknowledgement Receipt will establish the international filing date of the application.

REMARKS

Applicant submits amendments to the title and abstract to reflect the claimed subject matter. Also, Applicant noticed a typographical error in the remarks submitted on May 29, 2020. On page 8 of the remarks in the second full paragraph, Applicant wrote "US Patent No. 9,370,419….. the '418 Patent." This is correctly identified in a prior filed Information Disclosure Statement as US Patent No. 9,370,41*8* and not US Patent No. 9,370,41*9*. Applicant does not believe this to be any issue but is submitting remarks herewith for clarity.

DEPOSIT ACCOUNT

It is not believed that any additional fees are due at this time; however, the Commissioner is hereby authorized to charge any underpayments to Deposit Account No. **50-6191**.

Respectfully submitted,

Date: June 18, 2020

/Justin R. Nifong/
Justin R. Nifong
Reg. No. 59,389

NK Patent Law
4917 Waters Edge Drive, Suite 275
Raleigh, NC 27606
Telephone: (919) 348-2194
Facsimile: (919) 882-8195

Customer No. 115007

Document Description: Application Data Sheet to update/correct info
Doc Code: ADS.CORR

CORRECTED ADS FORM

Application Number	16808137
Title of Invention	DEVICE FOR ENDOVASCULAR AORTIC REPAIR AND METHOD OF USING THE SAME

Inventor Information

****If no data is shown, no data has been corrected****

	Data of Record	Updated Data
Order Number		
Name		
Residence Information		
Residency		
City		
State		
Country of Residence		
Mailing Address of Inventor		
Address 1		
Address 2		
City,State/Province, Postal Code		
Country		

Corrected ADS 1.0

Document Description: Application Data Sheet to update/correct info
Doc Code: ADS.CORR

Application Information

	Data of Record	Updated Data
Title of Invention	~~DEVICE FOR ENDOVASCULAR AORTIC REPAIR AND METHOD OF USING THE SAME~~	HEART VALVE REPLACEMENT DEVICE FOR ENDOVASCULAR AORTIC REPAIR AND METHOD OF USING THE SAME
Attorney Docket Number	426/2/9 UTIL	
Entity Type	Small	

Domestic Benefit/National Stage Information

****If no data is shown, no data has been corrected****

This section allows for the applicant to either claim benefit under 35 U.S.C. 119(e), 120, 121,365(c), or 386(c) or indicate National Stage entry from a PCT application. Providing this information in the application data sheet constitutes the specific reference required by 35 U.S. C. 119(e) or 120, and 37 CFR 1.78(a).

		Data of Record	Updated Data
	Prior Application Status		
	Application Number		
	Continuity Type		
	Prior Application Number		
	Filing Date (YYYY-MM-DD)		
	Patent Number		
	Issue Date (YYYY-MM-DD)		

Foreign Priority Information

Document Description: Application Data Sheet to update/correct info
Doc Code: ADS.CORR

****If no data is shown, no data has been corrected****

This section allows for the applicant to claim priority to a foreign application. Providing this information in the application data sheet constitutes the claim for priority as required by 35 U.S.C. 119(b) and 37 CFR 1.55. When priority is claimed to a foreign application that is eligible for retrieval under the priority document exchange program (PDX) the information will be used by the Office to automatically attempt retrieval pursuant to 37 CFR 1.55(i)(1) and (2). Under the PDX program, applicant bears the ultimate responsibility for ensuring that a copy of the foreign application is received by the Office from the participating foreign intellectual property office, or a certified copy of the foreign priority application is filed, within the time period specified in 37 CFR 1.55(g)(1).

		Data of Record	Updated Data
	Application Number		
	Country		
	Filing Date		
	Access Code		

Applicant Information

****If no data is shown, no data has been corrected****
Providing assignment information in this section does not substitute for compliance with any requirement of part 3 of Title 37 of CFR to have an assignment recorded by the Office.

	Data of Record	Updated Data
Applicant Type		
If applicant is the legal representative, indicate the authority to file the patent application, the inventor is		
Name of the Deceased or Legally Incapacitated Inventor		
Applicant is an Organization		
Name		
Organization Name		
Address 1		
Address 2		

Corrected ADS 1.0

City,State/Province,Postal Code		
Country		
Phone Number		
Fax Number		
Email Address		

Assignee Information including Non-Applicant Assignee Information

****If no data is shown, no data has been corrected****
Providing this information in the application data sheet does not substitute for compliance with any requirement of part 3 of Title 37 of the CFR to have an assignment recorded in the Office

	Data of Record	Updated Data
Order		
Applicant is an Organization		
Name		
Organization Name		
Mailing Address		
Address 1		
Address 2		
City,State/Province,Postal Code		
Country		
Phone Number		
Fax Number		
Email Address		

Signature

NOTE: This Application Data Sheet must be signed in accordance with 37 CFR 1.33(b).

This Application Data Sheet **must** be signed by a patent practitioner if one or more of the applicants is a **juristic entity** (e.g., corporation or association). If the applicant is two or more joint inventors, this form must be signed by a patent practitioner, **all** joint inventors who are the applicant, or one or more joint inventor-applicants who have been given power of attorney (e.g., see USPTO Form PTO/AIA/81) on behalf of **all** joint inventor-applicants.

See 37 CFR 1.4(d) for the manner of making signatures and certifications.

Signature	/Justin R. Nifong/	Registration Number	59389
First Name	Justin	Last Name	Nifong

Electronic Acknowledgement Receipt

EFS ID:	39754420
Application Number:	16808137
International Application Number:	
Confirmation Number:	1706
Title of Invention:	DEVICE FOR ENDOVASCULAR AORTIC REPAIR AND METHOD OF USING THE SAME
First Named Inventor/Applicant Name:	
Customer Number:	115007
Filer:	Justin Robert Nifong
Filer Authorized By:	
Attorney Docket Number:	426/2/9 UTIL
Receipt Date:	18-JUN-2020
Filing Date:	03-MAR-2020
Time Stamp:	07:35:14
Application Type:	Utility under 35 USC 111(a)

Payment information:

Submitted with Payment	no

File Listing:

Document Number	Document Description	File Name	File Size(Bytes)/ Message Digest	Multi Part /.zip	Pages (if appl.)
1	Application Data Sheet to update/ correct info	CorrectedADS.pdf	64155 612a88bcab746fdb790e23238a616fb80be39cd2	no	5

Warnings:

Information:	
Total Files Size (in bytes):	64155

This Acknowledgement Receipt evidences receipt on the noted date by the USPTO of the indicated documents, characterized by the applicant, and including page counts, where applicable. It serves as evidence of receipt similar to a Post Card, as described in MPEP 503.

New Applications Under 35 U.S.C. 111
If a new application is being filed and the application includes the necessary components for a filing date (see 37 CFR 1.53(b)-(d) and MPEP 506), a Filing Receipt (37 CFR 1.54) will be issued in due course and the date shown on this Acknowledgement Receipt will establish the filing date of the application.
National Stage of an International Application under 35 U.S.C. 371
If a timely submission to enter the national stage of an international application is compliant with the conditions of 35 U.S.C. 371 and other applicable requirements a Form PCT/DO/EO/903 indicating acceptance of the application as a national stage submission under 35 U.S.C. 371 will be issued in addition to the Filing Receipt, in due course.
New International Application Filed with the USPTO as a Receiving Office
If a new international application is being filed and the international application includes the necessary components for an international filing date (see PCT Article 11 and MPEP 1810), a Notification of the International Application Number and of the International Filing Date (Form PCT/RO/105) will be issued in due course, subject to prescriptions concerning national security, and the date shown on this Acknowledgement Receipt will establish the international filing date of the application.

PART B - FEE(S) TRANSMITTAL

Complete and send this form, together with applicable fee(s), by mail or fax, or via EFS-Web.

By mail, send to: Mail Stop ISSUE FEE
Commissioner for Patents
P.O. Box 1450
Alexandria, Virginia 22313-1450

By fax, send to: (571)-273-2885

INSTRUCTIONS: This form should be used for transmitting the ISSUE FEE and PUBLICATION FEE (if required). Blocks 1 through 5 should be completed where appropriate. All further correspondence including the Patent, advance orders and notification of maintenance fees will be mailed to the current correspondence address as indicated unless corrected below or directed otherwise in Block 1, by (a) specifying a new correspondence address; and/or (b) indicating a separate "FEE ADDRESS" for maintenance fee notifications.

CURRENT CORRESPONDENCE ADDRESS (Note: Use Block 1 for any change of address)

115007 7590 06/18/2020
NK Patent Law
4917 Waters Edge Dr.
Suite 275
Raleigh, NC 27606

Note: A certificate of mailing can only be used for domestic mailings of the Fee(s) Transmittal. This certificate cannot be used for any other accompanying papers. Each additional paper, such as an assignment or formal drawing, must have its own certificate of mailing or transmission.

Certificate of Mailing or Transmission

I hereby certify that this Fee(s) Transmittal is being deposited with the United States Postal Service with sufficient postage for first class mail in an envelope addressed to the Mail Stop ISSUE FEE address above, or being transmitted to the USPTO via EFS-Web or by facsimile to (571) 273-2885, on the date below.

(Typed or printed name)

(Signature)

(Date)

APPLICATION NO.	FILING DATE	FIRST NAMED INVENTOR	ATTORNEY DOCKET NO.	CONFIRMATION NO.
16/808,137	03/03/2020	Ali Shahriari	426/2/9 UTIL	1706

TITLE OF INVENTION: DEVICE FOR ENDOVASCULAR AORTIC REPAIR AND METHOD OF USING THE SAME

APPLN. TYPE	ENTITY STATUS	ISSUE FEE DUE	PUBLICATION FEE DUE	PREV. PAID ISSUE FEE	TOTAL FEE(S) DUE	DATE DUE
nonprovisional	SMALL	$500	$0.00	$0.00	$500	09/18/2020

EXAMINER	ART UNIT	CLASS-SUBCLASS
SHIPMON, TIFFANY P	3774	623-001200

1. Change of correspondence address or indication of "Fee Address" (37 CFR 1.363).

☐ Change of correspondence address (or Change of Correspondence Address form PTO/SB/122) attached.

☐ "Fee Address" indication (or "Fee Address" Indication form PTO/SB/47; Rev 03-09 or more recent) attached. **Use of a Customer Number is required.**

2. For printing on the patent front page, list
(1) The names of up to 3 registered patent attorneys or agents OR, alternatively,
(2) The name of a single firm (having as a member a registered attorney or agent) and the names of up to 2 registered patent attorneys or agents. If no name is listed, no name will be printed.

1 NK Patent Law
2
3

3. ASSIGNEE NAME AND RESIDENCE DATA TO BE PRINTED ON THE PATENT (print or type)

PLEASE NOTE: Unless an assignee is identified below, no assignee data will appear on the patent. If an assignee is identified below, the document must have been previously recorded, or filed for recordation, as set forth in 37 CFR 3.11 and 37 CFR 3.81(a). Completion of this form is NOT a substitute for filing an assignment.

(A) NAME OF ASSIGNEE: Aortic Innovations, LLC

(B) RESIDENCE: (CITY and STATE OR COUNTRY): Boca Raton, FL

Please check the appropriate assignee category or categories (will not be printed on the patent) : ☐ Individual ☐ Corporation or other private group entity ☐ Government

4a. Fees submitted: ☒ Issue Fee ☐ Publication Fee (if required) ☐ Advance Order - # of Copies _____

4b. Method of Payment: *(Please first reapply any previously paid fee shown above)*

☒ Electronic Payment via EFS-Web ☐ Enclosed check ☐ Non-electronic payment by credit card (Attach form PTO-2038)

☒ The Director is hereby authorized to charge the required fee(s), any deficiency, or credit any overpayment to Deposit Account No. 50-6191

5. **Change in Entity Status** (from status indicated above)

☐ Applicant certifying micro entity status. See 37 CFR 1.29

☐ Applicant asserting small entity status. See 37 CFR 1.27

☐ Applicant changing to regular undiscounted fee status.

NOTE: Absent a valid certification of Micro Entity Status (see forms PTO/SB/15A and 15B), issue fee payment in the micro entity amount will not be accepted at the risk of application abandonment.
NOTE: If the application was previously under micro entity status, checking this box will be taken to be a notification of loss of entitlement to micro entity status.
NOTE: Checking this box will be taken to be a notification of loss of entitlement to small or micro entity status, as applicable.

NOTE: This form must be signed in accordance with 37 CFR 1.31 and 1.33. See 37 CFR 1.4 for signature requirements and certifications.

Authorized Signature /Justin R. Nifong/ Date 2020-06-18

Typed or printed name Justin R. Nifong Registration No. 59389

Electronic Patent Application Fee Transmittal

Application Number:	16808137
Filing Date:	03-Mar-2020
Title of Invention:	DEVICE FOR ENDOVASCULAR AORTIC REPAIR AND METHOD OF USING THE SAME
First Named Inventor/Applicant Name:	Ali Shahriari
Filer:	Justin Robert Nifong/Sandra Hess
Attorney Docket Number:	426/2/9 UTIL

Filed as Small Entity

Filing Fees for Utility under 35 USC 111(a)

Description	Fee Code	Quantity	Amount	Sub-Total in USD($)
Basic Filing:				
Pages:				
Claims:				
Miscellaneous-Filing:				
Petition:				
Patent-Appeals-and-Interference:				
Post-Allowance-and-Post-Issuance:				
UTILITY APPL ISSUE FEE	2501	1	500	500

Description	Fee Code	Quantity	Amount	Sub-Total in USD($)
Extension-of-Time:				
Miscellaneous:				
			Total in USD ($)	**500**

Electronic Acknowledgement Receipt	
EFS ID:	39755049
Application Number:	16808137
International Application Number:	
Confirmation Number:	1706
Title of Invention:	DEVICE FOR ENDOVASCULAR AORTIC REPAIR AND METHOD OF USING THE SAME
First Named Inventor/Applicant Name:	Ali Shahriari
Customer Number:	115007
Filer:	Justin Robert Nifong/Sandra Hess
Filer Authorized By:	Justin Robert Nifong
Attorney Docket Number:	426/2/9 UTIL
Receipt Date:	18-JUN-2020
Filing Date:	03-MAR-2020
Time Stamp:	09:31:03
Application Type:	Utility under 35 USC 111(a)

Payment information:

Submitted with Payment	yes
Payment Type	CARD
Payment was successfully received in RAM	$500
RAM confirmation Number	E20206H031289364
Deposit Account	506191
Authorized User	Sandra Hess
The Director of the USPTO is hereby authorized to charge indicated fees and credit any overpayment as follows: 37 CFR 1.20 (Post Issuance fees)	

File Listing:

Document Number	Document Description	File Name	File Size(Bytes)/ Message Digest	Multi Part /.zip	Pages (if appl.)
1	Issue Fee Payment (PTO-85B)	426-2-9UTIL-20200618-IssueFeePayment.pdf	87865 a8b27daa77a44ce76b6a6d4a4da87730f9c90d1c	no	1
Warnings:					
Information:					
2	Fee Worksheet (SB06)	fee-info.pdf	30471 1f4b33ae94c63cb4019e7fe4fb63dfd59492b48b	no	2
Warnings:					
Information:					
		Total Files Size (in bytes):	118336		

This Acknowledgement Receipt evidences receipt on the noted date by the USPTO of the indicated documents, characterized by the applicant, and including page counts, where applicable. It serves as evidence of receipt similar to a Post Card, as described in MPEP 503.

New Applications Under 35 U.S.C. 111
If a new application is being filed and the application includes the necessary components for a filing date (see 37 CFR 1.53(b)-(d) and MPEP 506), a Filing Receipt (37 CFR 1.54) will be issued in due course and the date shown on this Acknowledgement Receipt will establish the filing date of the application.
National Stage of an International Application under 35 U.S.C. 371
If a timely submission to enter the national stage of an international application is compliant with the conditions of 35 U.S.C. 371 and other applicable requirements a Form PCT/DO/EO/903 indicating acceptance of the application as a national stage submission under 35 U.S.C. 371 will be issued in addition to the Filing Receipt, in due course.
New International Application Filed with the USPTO as a Receiving Office
If a new international application is being filed and the international application includes the necessary components for an international filing date (see PCT Article 11 and MPEP 1810), a Notification of the International Application Number and of the International Filing Date (Form PCT/RO/105) will be issued in due course, subject to prescriptions concerning national security, and the date shown on this Acknowledgement Receipt will establish the international filing date of the application.

Amendment to the specification:

Please amend the title to:

HEART VALVE REPLACEMENT DEVICE FOR ENDOVASCULAR AORTIC REPAIR AND METHOD OF USING THE SAME

Amendment to the Abstract:

Please amend the abstract to:

~~An intraluminal vascular prosthesis assembly, having a hollow cylindrical body with a first end and a second end is provided. The assembly includes, at its first end, a first vascular prosthesis portion, and at its second end, a second vascular prosthesis portion which has only a prosthesis material. The vascular prosthesis assembly has a stent portion which is provided between the first vascular prosthesis portion and the second vascular prosthesis portion, the stent portion being free of prosthesis material to allow fluid flow there through and received within the aortic arch and spanning the brachiocephalic artery, left common carotid artery, and left subclavian artery when placed within the aortic arch of a patient.~~ A heart valve replacement device for endovascular repair is provided. The heart valve replacement device includes a plurality of fibers for creating a seal with an anatomy of the patient. A heart valve is carried by an inner graft covering.

UNITED STATES PATENT AND TRADEMARK OFFICE

UNITED STATES DEPARTMENT OF COMMERCE
United States Patent and Trademark Office
Address: COMMISSIONER FOR PATENTS
P.O. Box 1450
Alexandria, Virginia 22313-1450
www.uspto.gov

APPLICATION NO.	FILING DATE	FIRST NAMED INVENTOR	ATTORNEY DOCKET NO.	CONFIRMATION NO.
16/808,137	03/03/2020	Ali Shahriari	426/2/9 UTIL	1706

115007 7590 05/29/2020
NK Patent Law
4917 Waters Edge Dr.
Suite 275
Raleigh, NC 27606

EXAMINER
SHIPMON, TIFFANY P

ART UNIT	PAPER NUMBER
3774	

NOTIFICATION DATE	DELIVERY MODE
05/29/2020	ELECTRONIC

Please find below and/or attached an Office communication concerning this application or proceeding.

The time period for reply, if any, is set in the attached communication.

Notice of the Office communication was sent electronically on above-indicated "Notification Date" to the following e-mail address(es):

docket@nkpatentlaw.com
eofficeaction@appcoll.com
usptomail@nkpatentlaw.com

PTOL-90A (Rev. 04/07)

Office Action Summary	Application No. 16/808,137	Applicant(s) Shahriari, Ali	
	Examiner TIFFANY P SHIPMON	Art Unit 3774	AIA (FITF) Status No

-- The MAILING DATE of this communication appears on the cover sheet with the correspondence address --

Period for Reply

A SHORTENED STATUTORY PERIOD FOR REPLY IS SET TO EXPIRE 2 MONTHS FROM THE MAILING DATE OF THIS COMMUNICATION.

- Extensions of time may be available under the provisions of 37 CFR 1.136(a). In no event, however, may a reply be timely filed after SIX (6) MONTHS from the mailing date of this communication.
- If NO period for reply is specified above, the maximum statutory period will apply and will expire SIX (6) MONTHS from the mailing date of this communication.
- Failure to reply within the set or extended period for reply will, by statute, cause the application to become ABANDONED (35 U.S.C. § 133). Any reply received by the Office later than three months after the mailing date of this communication, even if timely filed, may reduce any earned patent term adjustment. See 37 CFR 1.704(b).

Status

1)☑ Responsive to communication(s) filed on 01 May 2020.

☐ A declaration(s)/affidavit(s) under **37 CFR 1.130(b)** was/were filed on _____.

2a)☐ This action is **FINAL.** 2b) ☐ This action is non-final.

3)☐ An election was made by the applicant in response to a restriction requirement set forth during the interview on _____; the restriction requirement and election have been incorporated into this action.

4)☐ Since this application is in condition for allowance except for formal matters, prosecution as to the merits is closed in accordance with the practice under *Ex parte Quayle*, 1935 C.D. 11, 453 O.G. 213.

Disposition of Claims*

5) ☑ Claim(s) 11-27 is/are pending in the application.

5a) Of the above claim(s) _____ is/are withdrawn from consideration.

6) ☐ Claim(s) _____ is/are allowed.

7) ☐ Claim(s) _____ is/are rejected.

8) ☐ Claim(s) _____ is/are objected to.

9) ☑ Claim(s) 11-27 are subject to restriction and/or election requirement

* If any claims have been determined allowable, you may be eligible to benefit from the **Patent Prosecution Highway** program at a participating intellectual property office for the corresponding application. For more information, please see http://www.uspto.gov/patents/init_events/pph/index.jsp or send an inquiry to **PPHfeedback@uspto.gov.**

Application Papers

10)☐ The specification is objected to by the Examiner.

11)☐ The drawing(s) filed on _____ is/are: a)☐ accepted or b)☐ objected to by the Examiner.

Applicant may not request that any objection to the drawing(s) be held in abeyance. See 37 CFR 1.85(a).

Replacement drawing sheet(s) including the correction is required if the drawing(s) is objected to. See 37 CFR 1.121(d).

Priority under 35 U.S.C. § 119

12)☐ Acknowledgment is made of a claim for foreign priority under 35 U.S.C. § 119(a)-(d) or (f).

Certified copies:

a)☐ All b)☐ Some** c)☐ None of the:

1.☐ Certified copies of the priority documents have been received.

2.☐ Certified copies of the priority documents have been received in Application No. _____.

3.☐ Copies of the certified copies of the priority documents have been received in this National Stage application from the International Bureau (PCT Rule 17.2(a)).

** See the attached detailed Office action for a list of the certified copies not received.

Attachment(s)

1) ☐ Notice of References Cited (PTO-892)

2) ☐ Information Disclosure Statement(s) (PTO/SB/08a and/or PTO/SB/08b) Paper No(s)/Mail Date _____.

3) ☐ Interview Summary (PTO-413) Paper No(s)/Mail Date _____.

4) ☐ Other: _____.

DETAILED ACTION

Election/Restriction

1. Restriction to one of the following inventions is required under 35 U.S.C. 121:

I. Claims 11-22, drawn to a heart valve assembly, classified in A61F2/24.

II. Claims 23-27, drawn to a method, classified in A61F2/856.

The inventions are independent or distinct, each from the other because:

2. Inventions I and II are related as product and process of use. The inventions can be shown to be distinct if either or both of the following can be shown: (1) the process for using the product as claimed can be practiced with another materially different product or (2) the product as claimed can be used in a materially different process of using that product. See MPEP § 806.05(h). In the instant case the product as claimed can be used in a materially different process of using that product such as for instructional purposes.

3. Restriction for examination purposes as indicated is proper because all the inventions listed in this action are independent or distinct for the reasons given above and there would be a serious search and/or examination burden if restriction were not required because one or more of the following reasons apply: the inventions require a different field of search (e.g., searching different classes/subclasses or electronic resources, or employing different search strategies or search queries).

Applicant is advised that the reply to this requirement to be complete must include (i) an election of an invention to be examined even though the requirement may be traversed (37 CFR 1.143) **and (ii) identification of the claims encompassing the elected invention**.

The election of an invention may be made with or without traverse. To reserve a right to petition, the election must be made with traverse. If the reply does not distinctly and specifically point out supposed errors in the restriction requirement, the election shall be treated as an election without traverse. Traversal must be presented at the time of election in order to be considered timely. Failure to

timely traverse the requirement will result in the loss of right to petition under 37 CFR 1.144. If claims are added after the election, applicant must indicate which of these claims are readable upon the elected invention.

Should applicant traverse on the ground that the inventions are not patentably distinct, applicant should submit evidence or identify such evidence now of record showing the inventions to be obvious variants or clearly admit on the record that this is the case. In either instance, if the examiner finds one of the inventions unpatentable over the prior art, the evidence or admission may be used in a rejection under 35 U.S.C. 103 or pre-AIA 35 U.S.C. 103(a) of the other invention.

4. The examiner has required restriction between product or apparatus claims and process claims. Where applicant elects claims directed to the product/apparatus, and all product/apparatus claims are subsequently found allowable, withdrawn process claims that include all the limitations of the allowable product/apparatus claims should be considered for rejoinder. All claims directed to a nonelected process invention must include all the limitations of an allowable product/apparatus claim for that process invention to be rejoined.

In the event of rejoinder, the requirement for restriction between the product/apparatus claims and the rejoined process claims will be withdrawn, and the rejoined process claims will be fully examined for patentability in accordance with 37 CFR 1.104. Thus, to be allowable, the rejoined claims must meet all criteria for patentability including the requirements of 35 U.S.C. 101, 102, 103 and 112. Until all claims to the elected product/apparatus are found allowable, an otherwise proper restriction requirement between product/apparatus claims and process claims may be maintained. Withdrawn process claims that are not commensurate in scope with an allowable product/apparatus claim will not be rejoined. See MPEP § 821.04. Additionally, in order for rejoinder to occur, applicant is advised that the process claims should be amended during prosecution to require the limitations of the product/apparatus claims. **Failure to do so may result in no rejoinder.** Further, note that the prohibition

against double patenting rejections of 35 U.S.C. 121 does not apply where the restriction requirement is withdrawn by the examiner before the patent issues. See MPEP § 804.01.

Any inquiry concerning this communication or earlier communications from the examiner should be directed to TIFFANY P SHIPMON whose telephone number is (571)270-1448. The examiner can normally be reached on MONDAY-FRIDAY.

Examiner interviews are available via telephone, in-person, and video conferencing using a USPTO supplied web-based collaboration tool. To schedule an interview, applicant is encouraged to use the USPTO Automated Interview Request (AIR) at http://www.uspto.gov/interviewpractice.

If attempts to reach the examiner by telephone are unsuccessful, the examiner's supervisor, Jennifer Dieterle can be reached on 571-270-7872. The fax phone number for the organization where this application or proceeding is assigned is 571-273-8300.

Information regarding the status of an application may be obtained from the Patent Application Information Retrieval (PAIR) system. Status information for published applications may be obtained from either Private PAIR or Public PAIR. Status information for unpublished applications is available through Private PAIR only. For more information about the PAIR system, see https://ppair-my.uspto.gov/pair/PrivatePair. Should you have questions on access to the Private PAIR system, contact the Electronic Business Center (EBC) at 866-217-9197 (toll-free). If you would like assistance from a USPTO Customer Service Representative or access to the automated information system, call 800-786-9199 (IN USA OR CANADA) or 571-272-1000.

/TIFFANY P SHIPMON/
Examiner, Art Unit 3774

/Christopher D. Prone/
Primary Examiner, Art Unit 3774

Index of Claims	Application/Control No.	Applicant(s)/Patent Under Reexamination
	16/808,137	Shahriari, Ali
	Examiner	**Art Unit**
	CHRISTOPHER D PRONE	3774

✓	Rejected	-	Cancelled	N	Non-Elected	A	Appeal
=	Allowed	÷	Restricted	I	Interference	O	Objected

CLAIMS

☐ Claims renumbered in the same order as presented by applicant ☐ CPA ☐ T.D. ☐ R.1.47

CLAIM		DATE								
Final	Original	05/25/2020								
	1	-								
	2	-								
	3	-								
	4	-								
	5	-								
	6	-								
	7	-								
	8	-								
	9	-								
	10	-								
	11	÷								
	12	÷								
	13	÷								
	14	÷								
	15	÷								
	16	÷								
	17	÷								
	18	÷								
	19	÷								
	20	÷								
	21	÷								
	22	÷								
	23	÷								
	24	÷								
	25	÷								
	26	÷								
	27	÷								

COMMUNICATION TO THE UNITED STATES PATENT AND TRADEMARK OFFICE

Application No.	:	16/808,137	Confirmation No.:	1706
Applicant	:	Aortic Innovations, LLC		
First Named Inventor	:	Ali Shahriari		
Filing Date	:	Mar 3, 2020		
TC/A.U.	:	3774		
Examiner	:	Tiffany Shipmon		
Docket No.	:	426/2/9 UTIL		
Customer No.	:	115007		

Title of Invention: DEVICE FOR ENDOVASCULAR AORTIC REPAIR AND METHOD OF USING THE SAME

Via EFS-Web
Commissioner for Patents
P.O. Box 1450
Alexandria, VA 22313-1450

RESPONSE TO RESTRICTION REQUIREMENT

Commissioner:

This is responsive to the Restriction Requirement dated May 29, 2020, for which a shortened statutory period for reply has been extended up to and including July 29, 2020. This reply is timely submitted.

Claims begin on page 2 of this paper.

Remarks begin on page 6 of this paper.

Electronic Acknowledgement Receipt

EFS ID:	39575252
Application Number:	16808137
International Application Number:	
Confirmation Number:	1706
Title of Invention:	DEVICE FOR ENDOVASCULAR AORTIC REPAIR AND METHOD OF USING THE SAME
First Named Inventor/Applicant Name:	Ali Shahriari
Customer Number:	115007
Filer:	Justin Robert Nifong/Donna Donovan
Filer Authorized By:	Justin Robert Nifong
Attorney Docket Number:	426/2/9 UTIL
Receipt Date:	29-MAY-2020
Filing Date:	03-MAR-2020
Time Stamp:	13:50:28
Application Type:	Utility under 35 USC 111(a)

Payment information:

Submitted with Payment	no

File Listing:

Document Number	Document Description	File Name	File Size(Bytes)/ Message Digest	Multi Part /.zip	Pages (if appl.)
1		426-2-9UTIL-20200529-Resp-to-RR.pdf	34812 279f602623782ea087b8e9525d3864dd00f27443	yes	7

	Multipart Description/PDF files in .zip description		
	Document Description	**Start**	**End**
	Applicant Arguments/Remarks Made in an Amendment	6	7
	Claims	2	5
	Response to Election / Restriction Filed	1	1
Warnings:			
Information:			
	Total Files Size (in bytes):	34812	

This Acknowledgement Receipt evidences receipt on the noted date by the USPTO of the indicated documents, characterized by the applicant, and including page counts, where applicable. It serves as evidence of receipt similar to a Post Card, as described in MPEP 503.

<u>New Applications Under 35 U.S.C. 111</u>
If a new application is being filed and the application includes the necessary components for a filing date (see 37 CFR 1.53(b)-(d) and MPEP 506), a Filing Receipt (37 CFR 1.54) will be issued in due course and the date shown on this Acknowledgement Receipt will establish the filing date of the application.
<u>National Stage of an International Application under 35 U.S.C. 371</u>
If a timely submission to enter the national stage of an international application is compliant with the conditions of 35 U.S.C. 371 and other applicable requirements a Form PCT/DO/EO/903 indicating acceptance of the application as a national stage submission under 35 U.S.C. 371 will be issued in addition to the Filing Receipt, in due course.
<u>New International Application Filed with the USPTO as a Receiving Office</u>
If a new international application is being filed and the international application includes the necessary components for an international filing date (see PCT Article 11 and MPEP 1810), a Notification of the International Application Number and of the International Filing Date (Form PCT/RO/105) will be issued in due course, subject to prescriptions concerning national security, and the date shown on this Acknowledgement Receipt will establish the international filing date of the application.

REMARKS

Claims 11-27 are currently pending and are subject to restriction. Claims 23-27 are herein withdrawn.

ELECTION/RESTRICTION

Restriction to one of the following inventions has been required:

I. Claims 11-22, drawn to a heart valve assembly, classified in A61F2/24.

II. Claims 23-27, drawn to a method, classified in A61F2/856.

Applicant hereby elects Group I (claims 11-22, drawn to a heart valve assembly, classified in A61F2/24) to be examined by the Examiner. The claims of Group II (claims 23-27) are hereby withdrawn. The election is made without traverse, however, Applicant respectfully requests rejoinder of the claims if the limitations found patentable in the elected claims are also found in the non-elected claims.

CONCLUSION

Examiner is respectfully encouraged to contact the undersigned Applicant's representative if I can be of assistance to further the prosecution of this application; particularly if the Examiner feels an Examiner's Interview may be helpful to move this application towards allowance.

DEPOSIT ACCOUNT

It is not believed that any additional fees are due at this time; however, the Commissioner is hereby authorized to charge any underpayments to Deposit Account No. **50-6191**.

Respectfully submitted,

Date: May 29, 2020

/Justin R. Nifong/
Justin R. Nifong
Reg. No. 59,389

NK Patent Law
4917 Waters Edge Drive, Suite 275
Raleigh, NC 27606
Telephone: (919) 348-2194
Facsimile: (919) 882-8195

Customer No. 115007

In the Claims:

What is claimed:

Claims 1-10 (Canceled)

11. (Previously Presented) A heart valve assembly comprising:

an outer frame, wherein the outer frame is formed from a metallic material and defines a gridded configuration;

an inner frame that houses a prosthetic heart valve, wherein the inner frame is a graft covering extending around the prosthetic heart valve for providing sealing to the heart valve,

wherein the graft covering is one of polyester, PTFE, ePTFE, or a polymer;

wherein the outer frame is secured to the graft covering,

wherein the outer frame is secured to the graft covering by a plurality of stitches,

a sealing material positioned externally to the outer frame for providing sealing between the outer frame and a patient's anatomical wall to prevent paravalvular leaks, wherein the sealing material includes a plurality of radially extending fibers that extend outwardly of the outer frame.

12. (Previously Presented) The valve assembly of claim 11, wherein the fibers cover at least two circumferentially extending rows of grids formed in the gridded configuration.

13. (Previously Presented) The valve assembly of claim 11, wherein the fibers are engaged with the outer frame.

14. (Previously Presented) The valve assembly of claim 11, wherein the outer frame extends distally further than the prosthetic heart valve.

15. (Previously Presented) The valve assembly of claim 11, wherein the outer frame is a singular, integral component.

16. (Previously Presented) The valve assembly of claim 11, wherein the outer frame and the graft covering are attached by stitches at a top and bottom portion of the graft covering.

17. (Previously Presented) The valve assembly of claim 11, wherein the graft covering and the fibers are distinct elements.

18. (Previously Presented) The valve assembly of claim 11, wherein the valve assembly is delivered endovascularly.

19. (Previously Presented) The valve assembly of claim 11, wherein a seal is created between the inner frame and the outer frame.

20. (Previously Presented) The valve assembly of claim 11, wherein the valve assembly is balloon expandable.

21. (Previously Presented) The valve assembly of claim 11, wherein expansion of the valve assembly presses the sealing material against the aortic annulus of the patient.

22. (Previously Presented) A heart valve assembly comprising:

an outer frame, wherein the outer frame is formed from a metallic material and defines a gridded configuration;

an inner frame that houses a prosthetic heart valve, wherein the inner frame is a graft covering extending around the prosthetic heart valve for providing sealing to the heart valve,

wherein the graft covering is one of polyester, PTFE, ePTFE, or a polymer;

wherein the outer frame (216) is secured to the graft covering,

wherein the outer frame (216) is secured to the graft covering by a plurality of stitches,

a sealing material positioned externally to the outer frame (216) for providing sealing between the outer frame and a patient's anatomical wall to prevent paravalvular leaks, wherein the sealing material includes a plurality of radially extending fibers that extend outwardly of the outer frame (216),

wherein the outer frame extends distally further than the prosthetic heart valve,

wherein the graft covering and the fibers are distinct elements,

wherein expansion of the valve assembly presses the sealing material against the aortic annulus of the patient.

23. (Withdrawn) A method comprising:

accessing an access artery of a patient;

endovascularly delivering a heart valve through the access artery into an area proximal a native heart valve of the patient;

wherein the heart valve assembly comprises:

an outer frame, wherein the outer frame is formed from a metallic material and defines a gridded configuration;

an inner frame that houses a prosthetic heart valve (32), wherein the inner frame is a graft covering extending around the prosthetic heart valve for providing sealing to the heart valve,

wherein the graft covering is one of polyester, PTFE, ePTFE, or a polymer;

wherein the outer frame is secured to the inner frame,

wherein the outer frame is secured to the graft covering by a plurality of stitches,

wherein the outer frame is covered with a sealing material to prevent paravalvular leaks, wherein the sealing material is for providing sealing between the outer frame and the patient's anatomical wall, wherein the sealing material includes a plurality of radially extending fibers that extend outwardly of the outer frame, wherein the fibers include strands of fibers that terminate in an end thereof outwardly of the outer frame;

expanding the heart valve assembly into engagement with an annulus of the patient at the native heart valve such that the sealing material presses against the annulus of the patient.

24. (Withdrawn) The method of claim 23, wherein the valve assembly is delivered endovascularly.

25. (Withdrawn) The method of claim 23, wherein a seal is created between the inner frame and the outer frame.

26. (Withdrawn) The method of claim 23, wherein the valve assembly is balloon expandable.

27. (Withdrawn) The method of claim 23, wherein expansion of the valve assembly presses the sealing material against the aortic annulus of the patient.

COMMUNICATION TO THE UNITED STATES PATENT AND TRADEMARK OFFICE

Application No.	:	16/808,137	Confirmation No.:	1706
Applicant	:	Aortic Innovations, LLC		
First Named Inventor	:	Ali Shahriari		
Filing Date	:	Mar 3, 2020		
TC/A.U.	:	3774		
Examiner	:	-		
Docket No.	:	426/2/9 UTIL		
Customer No.	:	115007		

Title of Invention: DEVICE FOR ENDOVASCULAR AORTIC REPAIR AND METHOD OF USING THE SAME

Via EFS-Web
Commissioner for Patents
P.O. Box 1450
Alexandria, VA 22313-1450

PRELIMINARY AMENDMENT

Amendments to the Claims begin on page 2 of this paper.

Remarks begin on page 6 of this paper.

Amendments to the Claims:

The claims are amended as follows and will replace all previous versions and listings of claims:

Listing of Claims:

Claims 1-10 (Canceled)

11. (New) A heart valve assembly comprising:

an outer frame, wherein the outer frame is formed from a metallic material and defines a gridded configuration;

an inner frame that houses a prosthetic heart valve, wherein the inner frame is a graft covering extending around the prosthetic heart valve for providing sealing to the heart valve,

wherein the graft covering is one of polyester, PTFE, ePTFE, or a polymer;

wherein the outer frame is secured to the graft covering,

wherein the outer frame is secured to the graft covering by a plurality of stitches,

a sealing material positioned externally to the outer frame for providing sealing between the outer frame and a patient's anatomical wall to prevent paravalvular leaks, wherein the sealing material includes a plurality of radially extending fibers that extend outwardly of the outer frame.

12. (New) The valve assembly of claim 11, wherein the fibers cover at least two circumferentially extending rows of grids formed in the gridded configuration.

13. (New) The valve assembly of claim 11, wherein the fibers are engaged with the outer frame.

14. (New) The valve assembly of claim 11, wherein the outer frame extends distally further than the prosthetic heart valve.

15. (New) The valve assembly of claim 11, wherein the outer frame is a singular, integral component.

16. (New) The valve assembly of claim 11, wherein the outer frame and the graft covering are attached by stitches at a top and bottom portion of the graft covering.

17. (New) The valve assembly of claim 11, wherein the graft covering and the fibers are distinct elements.

18. (New) The valve assembly of claim 11, wherein the valve assembly is delivered endovascularly.

19. (New) The valve assembly of claim 11, wherein a seal is created between the inner frame and the outer frame.

20. (New) The valve assembly of claim 11, wherein the valve assembly is balloon expandable.

21. (New) The valve assembly of claim 11, wherein expansion of the valve assembly presses the sealing material against the aortic annulus of the patient.

22. (New) A heart valve assembly comprising:

an outer frame, wherein the outer frame is formed from a metallic material and defines a gridded configuration;

an inner frame that houses a prosthetic heart valve, wherein the inner frame is a graft covering extending around the prosthetic heart valve for providing sealing to the heart valve,

wherein the graft covering is one of polyester, PTFE, ePTFE, or a polymer;

wherein the outer frame (216) is secured to the graft covering,

wherein the outer frame (216) is secured to the graft covering by a plurality of stitches,

a sealing material positioned externally to the outer frame (216) for providing sealing between the outer frame and a patient's anatomical wall to prevent paravalvular leaks, wherein the sealing material includes a plurality of radially extending fibers that extend outwardly of the outer frame (216),

wherein the outer frame extends distally further than the prosthetic heart valve,

wherein the graft covering and the fibers are distinct elements,

wherein expansion of the valve assembly presses the sealing material against the aortic annulus of the patient.

23. (New) A method comprising:

accessing an access artery of a patient;

endovascularly delivering a heart valve through the access artery into an area proximal a native heart valve of the patient;

wherein the heart valve assembly comprises:

an outer frame, wherein the outer frame is formed from a metallic material and defines a gridded configuration;

an inner frame that houses a prosthetic heart valve (32), wherein the inner frame is a graft covering extending around the prosthetic heart valve for providing sealing to the heart valve,

wherein the graft covering is one of polyester, PTFE, ePTFE, or a polymer;

wherein the outer frame is secured to the inner frame,

wherein the outer frame is secured to the graft covering by a plurality of stitches,

wherein the outer frame is covered with a sealing material to prevent paravalvular leaks, wherein the sealing material is for providing sealing between the outer frame and the patient's anatomical wall, wherein the sealing material includes a plurality of radially extending fibers that extend outwardly of the outer frame, wherein the fibers include strands of fibers that terminate in an end thereof outwardly of the outer frame;

expanding the heart valve assembly into engagement with an annulus of the patient at the native heart valve such that the sealing material presses against the annulus of the patient.

24. (New) The method of claim 23, wherein the valve assembly is delivered endovascularly.

25. (New) The method of claim 23, wherein a seal is created between the inner frame and the outer frame.

26. (New) The method of claim 23, wherein the valve assembly is balloon expandable.

27. (New) The method of claim 23, wherein expansion of the valve assembly presses the sealing material against the aortic annulus of the patient.

REMARKS

Applicant submits the claims enclosed herewith as a preliminary amendment in this matter. Applicant has requested a prior art search that is generally related to the claims presented herein. Specifically, the search report by the Intentus Group, dated March 30, 2020, which was provided on an Information Disclosure Statement (IDS) in this file history on April 6, 2020. The search results have been grouped by Intentus in descending as to relevancy order, with focus on the first five (5) references as being "most relevant" as determined by Intentus.

The first independent claim recites:

11. A heart valve assembly comprising:

an outer frame, wherein the outer frame is formed from a metallic material and defines a gridded configuration;

an inner frame that houses a prosthetic heart valve, wherein the inner frame is a graft covering extending around the prosthetic heart valve for providing sealing to the heart valve,

wherein the graft covering is one of polyester, PTFE, ePTFE, or a polymer;

wherein the outer frame is secured to the graft covering,

wherein the outer frame is secured to the graft covering by a plurality of stitches,

a sealing material positioned externally to the outer frame for providing sealing between the outer frame and a patient's anatomical wall to prevent paravalvular leaks, wherein the sealing material includes a plurality of radially extending fibers that extend outwardly of the outer frame.

This is well illustrated with reference to FIGS. 11 and 12 of the application as filed:

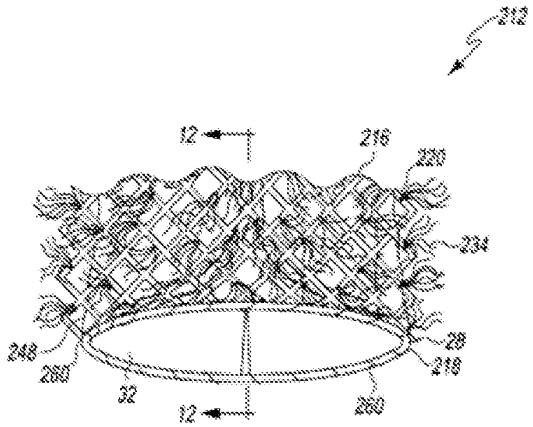

Fig. 11

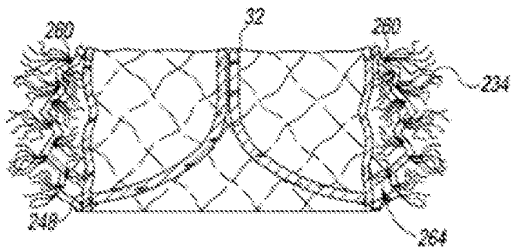

Fig. 12

The claims are directed towards an improved heart valve that address paravalvular leaks. Namely, by having an inner frame that is a graft covering around the heart valve, sealing aspects are provided to the valve against the metallic outer frame. This helps to provide a seal around an inner facing surface of the metallic frame, as well as protect at least portions of the valve leaflets from contact with the metal frame. The sealing material positioned externally to the outer frame provides sealing between the outer frame and the patient's anatomical wall.

Paravalvular leaks are a persistent problem with transcathether aortic valve replacement (TAVR). For example, a recent study found that the CoreValve prosthesis, one of the few available TAVR devices had moderate or severe PVR of 11.4% and 9.0% at 30 days. From a recent study involving 60 patients:

> *The primary efficacy endpoint was defined as the proportion of patients with less-than-mild prosthetic valve regurgitation at 30 days and amounted to 72.4%, with no patient showing evidence for moderate or severe regurgitation. Of the patients without a pacemaker at baseline, 11.8% required implantation of a permanent pacemaker within 30 days after TAVR. The mean transprosthetic gradient was low with 6.4 mm Hg as typical for a supra-annular valve design, though acknowledging that no patient requiring a 23-mm device was included. The pre-defined primary safety endpoints, all-cause mortality and disabling stroke at 30 days, amounted to 1.7% each in a patient population*

with a mean Society of Thoracic Surgeons score of 6.4%. Thirty-day rates of major vascular complications and life-threatening or disabling bleeding were 10.0% and 11.7%, respectively.

The presented data are promising and support the concept to mimic surgical-like outcomes as it relates to PVR by the addition of an external seal that compensates for incomplete stent-landing zone apposition…

http://interventions.onlinejacc.org/content/jint/11/2/169.full.pdf

Thus, as this study shows, paravalvular leaks are a long-felt problem and a method of addressing them has been needed. According to this study, an external seal helps to address PVR. The claimed invention includes an external seal, to go along with the internal seal created by the graft covering.

US Patent No. 9,370,419 does appear to teach an external seal that includes fibers. The '418 patent, however, claims priority to a provisional application dated June 23, 2011, by and through US Application No. 13/797,591 filed on March 12, 2013, which is a continuation-in-part of US Application No. 13/167,639, filed on June 23, 2011. FIG. 31C as an example illustrates:

FIG. 31C

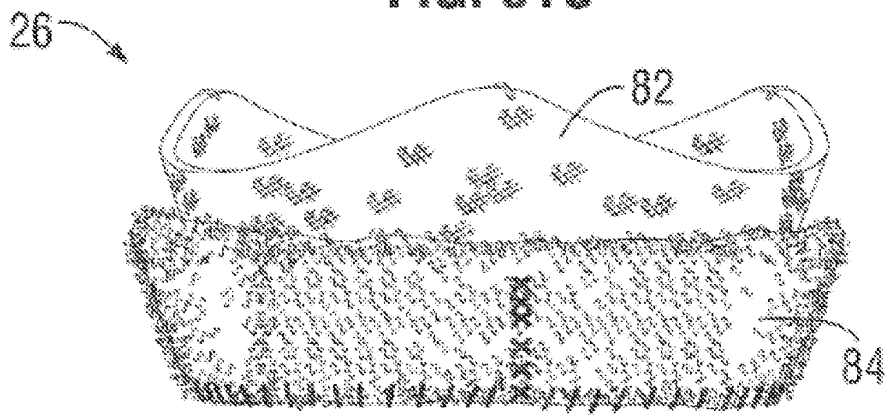

However, it appears that this portion of disclosure was first found in the 13/167,639 application filed on March 23, 2013, which occurs after Applicant's effective filing date, which is believed to be based on Provisional Patent Application No. 61/723,446, filed on November 7, 2012.

A support chart comparing the independent claim to the '446 provisional is shown below:

Claims	
1. A heart valve assembly comprising:	
an outer frame, wherein the outer frame is formed from a metallic material and defines a gridded configuration;	The outer frame is illustrated as (16). The outer frame (16) is shown having a gridded configuration. 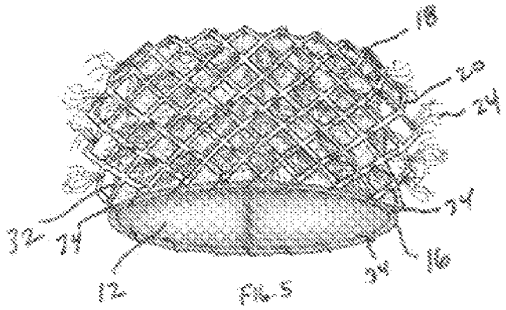
an inner frame that houses a prosthetic heart valve (32),	The inner frame is 18 and included a tubular stent 32. The heart valve is shown inside of the tubular stent 32. 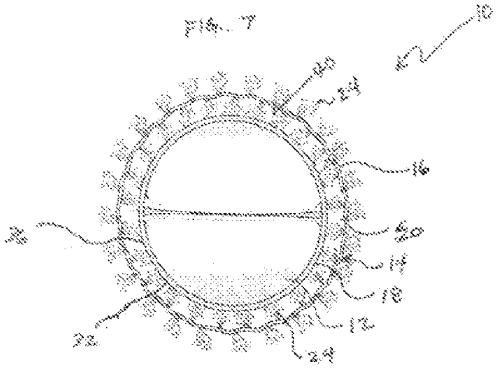 **{0029}** As described above, the device 10 also includes a balloon-expandable inner frame 18 that is secured to the outer frame 16. Referring now to FIG. 4, the inner frame 18 includes a tubular stent 32 that has with a length of approximately 15mm and an expanded diameter of 26 mm. In the illustrative embodiment, the tubular stent 32 is constructed of a metallic material in an open-cell fashion. It should be appreciated that in other embodiments the tubular stent 32 may be formed from a polymeric material. In the illustrative embodiment, the tubular stent 32 is covered with low-profile polyester.

wherein the inner frame is a graft covering extending around the prosthetic heart valve for providing sealing to the heart valve,	**[0030]** As described above, the device 10 also includes a valve component 12 that is secured to the inner frame 18. In the illustrative embodiment, the valve component 12 is bicuspid, but may be tricuspid, and may be configured from treated bovine pericardium or other suitable proven biological or synthetic material.
wherein the graft covering is one of polyester, PTFE, ePTFE, or a polymer;	-8- However, it should be appreciated that the tubular stent 32 may be covered with standard polyester, ePTFE or other nonporous materials.
wherein the outer frame (216) is secured to the graft covering,	**[0031]** Referring now to FIG. 5, the inner frame 18 of the dual-frame component 14 is secured to the outer frame 16 via a plurality of stitches 34. It should be appreciated that in other embodiments soldering, welding or other fasteners may be used to secure the inner frame 18 to the outer frame 16. As shown in FIGS. 5-8, the inner frame 18 and the valve component 12 are positioned in a passageway 22 defined in the self-expanding frame 16. When the inner frame 18 is unexpanded, the outer surface 36 of the tubular stent 32 is spaced apart from the fibers 24 attached to the outer frame 16. In the illustrative embodiment, a gap 40 is defined therebetween, and the gap 40 has a magnitude of about 2 mm to about 3 mm.
wherein the outer frame (216) is secured to the graft covering by a plurality of stitches,	**[0031]** Referring now to FIG. 5, the inner frame 18 of the dual-frame component 14 is secured to the outer frame 16 via a plurality of stitches 34. It should be appreciated that in other embodiments soldering, welding or other fasteners may be used to secure the inner frame 18 to the outer frame 16. As shown in FIGS. 5-8, the inner frame 18 and the valve component 12 are positioned in a passageway 22 defined in the self-expanding frame 16. When the inner frame 18 is unexpanded, the outer surface 36 of the tubular stent 32 is spaced apart from the fibers 24 attached to the outer frame 16. In the illustrative embodiment, a gap 40 is defined therebetween, and the gap 40 has a magnitude of about 2 mm to about 3 mm.
a sealing material positioned externally to the outer frame (216) for providing sealing between the outer frame and a patient's anatomical wall to prevent paravalvular leaks,	**[0024]** In the illustrative embodiment, collagen fibers 24 are attached to the stent 20 to aid in preventing paravalvular leaks and migration of the transcatheter valve device 10 within the aortic walls. The fibers 24 extend outwardly from the stent 20 and inwardly into the passageway 22. It should be appreciated that in other embodiments the outer frame 16 may be covered with hydrogel or other sealing materials. In other embodiments, a plurality of barbs or hooks may be attached to the stent 20. The hooks may be configured to further engage the tissue of the aorta and inhibit or prevent migration of the device 10.

wherein the sealing material includes a plurality of radially extending fibers that extend outwardly of the outer frame (216).	**[0024]** In the illustrative embodiment, collagen fibers 24 are attached to the stent 20 to aid in preventing paravalvular leaks and migration of the transcatheter valve device 10 within the aortic walls. The fibers 24 extend outwardly from the stent 20 and inwardly into the passageway 22. It should be appreciated that in other embodiments the outer frame 16 may be covered with hydrogel or other sealing materials. In other embodiments, a plurality of barbs or hooks may be attached to the stent 20. The hooks may be configured to further engage the tissue of the aorta and inhibit or prevent migration of the device 10.

WO2006/005015 appears to teach a band with fibers emanating therefrom in FIG. 22, however, there is no graft forming the inner frame, thus the inner sealing is missing. FIG. 22 is reproduced below:

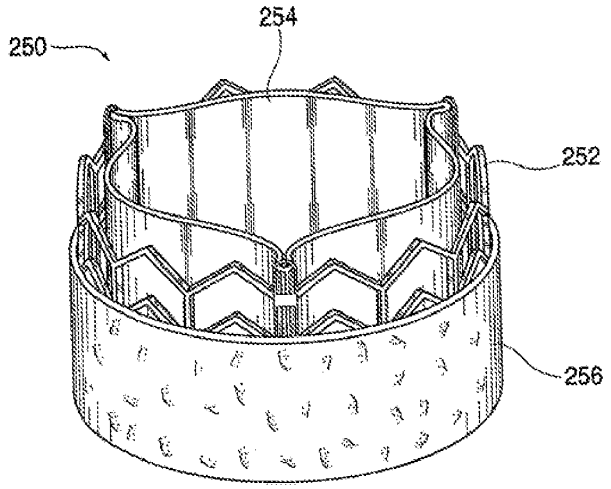

FIG. 22

US Patent Publication No. 2004/0256759 does not appear to teach a heart valve assembly.

Applicant is aware that the Sapien 3 Ultra, a publicly available endovascular valve, appears to be covered by the claimed invention herein. In a recent study of 139 patients, it was reported that there were two moderate (1.4%) and no moderate/severe paravalvular leaks. https://www.ncbi.nlm.nih.gov/pubmed/31763985. The Sapien 3 Ultra device includes both an inner frame that is a graft. A representative image from the same study is shown below:

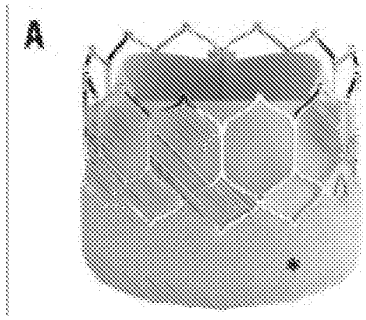

Applicant thus submits that the claimed invention represents an improvement over the prior art of record in reducing paravalvular leaks, while maintaining a sufficiently small enough profile to be implanted endovascularly. Applicant thus submits that the invention claimed herein is patentable over the prior art of record.

DEPOSIT ACCOUNT

The Commissioner is hereby authorized to charge any otherwise unpaid fees associated with the filing of this correspondence to Deposit Account No. **50-6191**.

Respectfully submitted,

Date: May 1, 2020

/Justin R. Nifong/
Justin R. Nifong
Reg. No. 59,389

NK Patent Law
4917 Waters Edge Drive, Suite 275
Raleigh, NC 27606
Telephone: (919) 348-2194
Facsimile: (919) 882-8195

Customer No. 115007

Electronic Acknowledgement Receipt

EFS ID:	39328066
Application Number:	16808137
International Application Number:	
Confirmation Number:	1706
Title of Invention:	DEVICE FOR ENDOVASCULAR AORTIC REPAIR AND METHOD OF USING THE SAME
First Named Inventor/Applicant Name:	Ali Shahriari
Customer Number:	115007
Filer:	Justin Robert Nifong/Donna Donovan
Filer Authorized By:	Justin Robert Nifong
Attorney Docket Number:	426/2/9 UTIL
Receipt Date:	01-MAY-2020
Filing Date:	03-MAR-2020
Time Stamp:	14:15:41
Application Type:	Utility under 35 USC 111(a)

Payment information:

Submitted with Payment	no

File Listing:

Document Number	Document Description	File Name	File Size(Bytes)/ Message Digest	Multi Part /.zip	Pages (if appl.)
1		426-2-9UTIL-20200501-Prelim-Amendment.pdf	315854 b55c9cc9daa0c83a15c3d98263a2e9253b7876e1	yes	13

	Multipart Description/PDF files in .zip description		
	Document Description	**Start**	**End**
	Preliminary Amendment	1	1
	Claims	2	5
	Amendment/Req. Reconsideration-After Non-Final Reject	6	13
Warnings:			
Information:			
	Total Files Size (in bytes):	315854	

This Acknowledgement Receipt evidences receipt on the noted date by the USPTO of the indicated documents, characterized by the applicant, and including page counts, where applicable. It serves as evidence of receipt similar to a Post Card, as described in MPEP 503.

New Applications Under 35 U.S.C. 111
If a new application is being filed and the application includes the necessary components for a filing date (see 37 CFR 1.53(b)-(d) and MPEP 506), a Filing Receipt (37 CFR 1.54) will be issued in due course and the date shown on this Acknowledgement Receipt will establish the filing date of the application.
National Stage of an International Application under 35 U.S.C. 371
If a timely submission to enter the national stage of an international application is compliant with the conditions of 35 U.S.C. 371 and other applicable requirements a Form PCT/DO/EO/903 indicating acceptance of the application as a national stage submission under 35 U.S.C. 371 will be issued in addition to the Filing Receipt, in due course.
New International Application Filed with the USPTO as a Receiving Office
If a new international application is being filed and the international application includes the necessary components for an international filing date (see PCT Article 11 and MPEP 1810), a Notification of the International Application Number and of the International Filing Date (Form PCT/RO/105) will be issued in due course, subject to prescriptions concerning national security, and the date shown on this Acknowledgement Receipt will establish the international filing date of the application.

PTO/SB/08a (02-18)
Approved for use through 11/30/2020. OMB 0651-0031
U.S. Patent and Trademark Office; U.S. DEPARTMENT OF COMMERCE
Under the Paperwork Reduction Act of 1995, no persons are required to respond to a collection of information unless it contains a valid OMB control number.

INFORMATION DISCLOSURE STATEMENT BY APPLICANT

(Not for submission under 37 CFR 1.99)

Application Number	16808137
Filing Date	2020-03-03
First Named Inventor	Ali Shahriari
Art Unit	3774
Examiner Name	-
Attorney Docket Number	426/2/9 UTIL

U.S.PATENTS Remove

Examiner Initial*	Cite No	Patent Number	Kind Code[1]	Issue Date	Name of Patentee or Applicant of cited Document	Pages,Columns,Lines where Relevant Passages or Relevant Figures Appear
	1					

If you wish to add additional U.S. Patent citation information please click the Add button. Add

U.S.PATENT APPLICATION PUBLICATIONS Remove

Examiner Initial*	Cite No	Publication Number	Kind Code[1]	Publication Date	Name of Patentee or Applicant of cited Document	Pages,Columns,Lines where Relevant Passages or Relevant Figures Appear
	1					

If you wish to add additional U.S. Published Application citation information please click the Add button. Add

FOREIGN PATENT DOCUMENTS Remove

Examiner Initial*	Cite No	Foreign Document Number[3]	Country Code[2] i	Kind Code[4]	Publication Date	Name of Patentee or Applicant of cited Document	Pages,Columns,Lines where Relevant Passages or Relevant Figures Appear	T[5]
	1							

If you wish to add additional Foreign Patent Document citation information please click the Add button Add

NON-PATENT LITERATURE DOCUMENTS Remove

Examiner Initials*	Cite No	Include name of the author (in CAPITAL LETTERS), title of the article (when appropriate), title of the item (book, magazine, journal, serial, symposium, catalog, etc), date, pages(s), volume-issue number(s), publisher, city and/or country where published.	T[5]

INFORMATION DISCLOSURE STATEMENT BY APPLICANT (Not for submission under 37 CFR 1.99)	Application Number	16808137
	Filing Date	2020-03-03
	First Named Inventor	Ali Shahriari
	Art Unit	3774
	Examiner Name	-
	Attorney Docket Number	426/2/9 UTIL

	1	SAIA, FRANCESCO, et al., In-hospital and thirty-day outcomes of the SAPIEN 3 Ultra balloon-expandable transcatheter aortic valve: the S3U registry, Interventions for Valvular Disease and Heart Failure, Clinical Research, EuroIntervention 2020; 15: 1240-1247, November 2019, Pgs. 1-10	
	2	SAIA, F, et al., In-hospital and thirty-day outcomes of the SAPIEN 3 Ultra balloon-expandable transcatheter aortic valve: the S3U registry, EuroIntervention, Feb. 20, 2020, Vol 15, No. 14, Pgs. 1240-1247, doi: 10.4244/EIJ-D-19-00541	

If you wish to add additional non-patent literature document citation information please click the Add button Add

EXAMINER SIGNATURE

Examiner Signature		Date Considered	

*EXAMINER: Initial if reference considered, whether or not citation is in conformance with MPEP 609. Draw line through a citation if not in conformance and not considered. Include copy of this form with next communication to applicant.

[1] See Kind Codes of USPTO Patent Documents at www.USPTO.GOV or MPEP 901.04. [2] Enter office that issued the document, by the two-letter code (WIPO Standard ST.3). [3] For Japanese patent documents, the indication of the year of the reign of the Emperor must precede the serial number of the patent document. [4] Kind of document by the appropriate symbols as indicated on the document under WIPO Standard ST.16 if possible. [5] Applicant is to place a check mark here if English language translation is attached.

INFORMATION DISCLOSURE STATEMENT BY APPLICANT (Not for submission under 37 CFR 1.99)	Application Number	16808137
	Filing Date	2020-03-03
	First Named Inventor	Ali Shahriari
	Art Unit	3774
	Examiner Name	-
	Attorney Docket Number	426/2/9 UTIL

CERTIFICATION STATEMENT

Please see 37 CFR 1.97 and 1.98 to make the appropriate selection(s):

That each item of information contained in the information disclosure statement was first cited in any communication from a foreign patent office in a counterpart foreign application not more than three months prior to the filing of the information disclosure statement. See 37 CFR 1.97(e)(1).

OR

☐ That no item of information contained in the information disclosure statement was cited in a communication from a foreign patent office in a counterpart foreign application, and, to the knowledge of the person signing the certification after making reasonable inquiry, no item of information contained in the information disclosure statement was known to any individual designated in 37 CFR 1.56(c) more than three months prior to the filing of the information disclosure statement. See 37 CFR 1.97(e)(2).

See attached certification statement.

The fee set forth in 37 CFR 1.17 (p) has been submitted herewith.

☒ A certification statement is not submitted herewith.

SIGNATURE

A signature of the applicant or representative is required in accordance with CFR 1.33, 10.18. Please see CFR 1.4(d) for the form of the signature.

Signature	/Justin R. Nifong/	Date (YYYY-MM-DD)	2020-05-01
Name/Print	Justin R. Nifong	Registration Number	59389

This collection of information is required by 37 CFR 1.97 and 1.98. The information is required to obtain or retain a benefit by the public which is to file (and by the USPTO to process) an application. Confidentiality is governed by 35 U.S.C. 122 and 37 CFR 1.14. This collection is estimated to take 1 hour to complete, including gathering, preparing and submitting the completed application form to the USPTO. Time will vary depending upon the individual case. Any comments on the amount of time you require to complete this form and/or suggestions for reducing this burden, should be sent to the Chief Information Officer, U.S. Patent and Trademark Office, U.S. Department of Commerce, P.O. Box 1450, Alexandria, VA 22313-1450. DO NOT SEND FEES OR COMPLETED FORMS TO THIS ADDRESS. **SEND TO: Commissioner for Patents, P.O. Box 1450, Alexandria, VA 22313-1450.**

Privacy Act Statement

The Privacy Act of 1974 (P.L. 93-579) requires that you be given certain information in connection with your submission of the attached form related to a patent application or patent. Accordingly, pursuant to the requirements of the Act, please be advised that: (1) the general authority for the collection of this information is 35 U.S.C. 2(b)(2); (2) furnishing of the information solicited is voluntary; and (3) the principal purpose for which the information is used by the U.S. Patent and Trademark Office is to process and/or examine your submission related to a patent application or patent. If you do not furnish the requested information, the U.S. Patent and Trademark Office may not be able to process and/or examine your submission, which may result in termination of proceedings or abandonment of the application or expiration of the patent.

The information provided by you in this form will be subject to the following routine uses:

1. The information on this form will be treated confidentially to the extent allowed under the Freedom of Information Act (5 U.S.C. 552) and the Privacy Act (5 U.S.C. 552a). Records from this system of records may be disclosed to the Department of Justice to determine whether the Freedom of Information Act requires disclosure of these record s.

2. A record from this system of records may be disclosed, as a routine use, in the course of presenting evidence to a court, magistrate, or administrative tribunal, including disclosures to opposing counsel in the course of settlement negotiations.

3. A record in this system of records may be disclosed, as a routine use, to a Member of Congress submitting a request involving an individual, to whom the record pertains, when the individual has requested assistance from the Member with respect to the subject matter of the record.

4. A record in this system of records may be disclosed, as a routine use, to a contractor of the Agency having need for the information in order to perform a contract. Recipients of information shall be required to comply with the requirements of the Privacy Act of 1974, as amended, pursuant to 5 U.S.C. 552a(m).

5. A record related to an International Application filed under the Patent Cooperation Treaty in this system of records may be disclosed, as a routine use, to the International Bureau of the World Intellectual Property Organization, pursuant to the Patent Cooperation Treaty.

6. A record in this system of records may be disclosed, as a routine use, to another federal agency for purposes of National Security review (35 U.S.C. 181) and for review pursuant to the Atomic Energy Act (42 U.S.C. 218(c)).

7. A record from this system of records may be disclosed, as a routine use, to the Administrator, General Services, or his/her designee, during an inspection of records conducted by GSA as part of that agency's responsibility to recommend improvements in records management practices and programs, under authority of 44 U.S.C. 2904 and 2906. Such disclosure shall be made in accordance with the GSA regulations governing inspection of records for this purpose, and any other relevant (i.e., GSA or Commerce) directive. Such disclosure shall not be used to make determinations about individuals.

8. A record from this system of records may be disclosed, as a routine use, to the public after either publication of the application pursuant to 35 U.S.C. 122(b) or issuance of a patent pursuant to 35 U.S.C. 151. Further, a record may be disclosed, subject to the limitations of 37 CFR 1.14, as a routine use, to the public if the record was filed in an application which became abandoned or in which the proceedings were terminated and which application is referenced by either a published application, an application open to public inspections or an issued patent.

9. A record from this system of records may be disclosed, as a routine use, to a Federal, State, or local law enforcement agency, if the USPTO becomes aware of a violation or potential violation of law or regulation.

Electronic Acknowledgement Receipt

EFS ID:	39328807
Application Number:	16808137
International Application Number:	
Confirmation Number:	1706
Title of Invention:	DEVICE FOR ENDOVASCULAR AORTIC REPAIR AND METHOD OF USING THE SAME
First Named Inventor/Applicant Name:	Ali Shahriari
Customer Number:	115007
Filer:	Justin Robert Nifong/Donna Donovan
Filer Authorized By:	Justin Robert Nifong
Attorney Docket Number:	426/2/9 UTIL
Receipt Date:	01-MAY-2020
Filing Date:	03-MAR-2020
Time Stamp:	14:52:33
Application Type:	Utility under 35 USC 111(a)

Payment information:

Submitted with Payment	no

File Listing:

Document Number	Document Description	File Name	File Size(Bytes)/ Message Digest	Multi Part /.zip	Pages (if appl.)
1	Information Disclosure Statement (IDS) Form (SB08)	426-2-9UTIL-20200501-IDS.pdf	1034526 d9758a85f0347e98fc0a3cd07a94b721840b0fb5	no	4

Warnings:

Information:					
A U.S. Patent Number Citation or a U.S. Publication Number Citation is required in the Information Disclosure Statement (IDS) form for autoloading of data into USPTO systems. You may remove the form to add the required data in order to correct the Informational Message if you are citing U.S. References. If you chose not to include U.S. References, the image of the form will be processed and be made available within the Image File Wrapper (IFW) system. However, no data will be extracted from this form. Any additional data such as Foreign Patent Documents or Non Patent Literature will be manually reviewed and keyed into USPTO systems.					
2	Foreign Reference	NPL1-SAIA.pdf	856884 f9b72886d7eb381ca5eeb688eb66c081c51cc0f8	no	10
Warnings:					
Information:					
3	Foreign Reference	NPL2-SAIA-F.pdf	108137 3caabc04c5066ea0d00404e511ded9c36f763c3b	no	2
Warnings:					
Information:					
			Total Files Size (in bytes):	1999547	

This Acknowledgement Receipt evidences receipt on the noted date by the USPTO of the indicated documents, characterized by the applicant, and including page counts, where applicable. It serves as evidence of receipt similar to a Post Card, as described in MPEP 503.

<u>New Applications Under 35 U.S.C. 111</u>
If a new application is being filed and the application includes the necessary components for a filing date (see 37 CFR 1.53(b)-(d) and MPEP 506), a Filing Receipt (37 CFR 1.54) will be issued in due course and the date shown on this Acknowledgement Receipt will establish the filing date of the application.
<u>National Stage of an International Application under 35 U.S.C. 371</u>
If a timely submission to enter the national stage of an international application is compliant with the conditions of 35 U.S.C. 371 and other applicable requirements a Form PCT/DO/EO/903 indicating acceptance of the application as a national stage submission under 35 U.S.C. 371 will be issued in addition to the Filing Receipt, in due course.
<u>New International Application Filed with the USPTO as a Receiving Office</u>
If a new international application is being filed and the international application includes the necessary components for an international filing date (see PCT Article 11 and MPEP 1810), a Notification of the International Application Number and of the International Filing Date (Form PCT/RO/105) will be issued in due course, subject to prescriptions concerning national security, and the date shown on this Acknowledgement Receipt will establish the international filing date of the application.

UNITED STATES PATENT AND TRADEMARK OFFICE

UNITED STATES DEPARTMENT OF COMMERCE
United States Patent and Trademark Office
Address: COMMISSIONER FOR PATENTS
P.O. Box 1450
Alexandria, Virginia 22313-1450
www.uspto.gov

APPLICATION NO.	FILING DATE	FIRST NAMED INVENTOR	ATTORNEY DOCKET NO.	CONFIRMATION NO.
16/808,137	03/03/2020	Ali Shahriari	426/2/9 UTIL	1706

115007 7590 04/08/2020
NK Patent Law
4917 Waters Edge Drive
Suite 275
Raleigh, NC 27606

EXAMINER

ART UNIT	PAPER NUMBER
3774	

NOTIFICATION DATE	DELIVERY MODE
04/08/2020	ELECTRONIC

Please find below and/or attached an Office communication concerning this application or proceeding.

The time period for reply, if any, is set in the attached communication.

Notice of the Office communication was sent electronically on above-indicated "Notification Date" to the following e-mail address(es):

docket@nkpatentlaw.com
eofficeaction@appcoll.com
usptomail@nkpatentlaw.com

PTOL-90A (Rev. 04/07)

Decision Granting Request for Prioritized Examination (Track I)	**Application No.** 16/808,137	**Applicant(s)** Shahriari, Ali	
	Examiner BRIAN W BROWN	**Art Unit** OPET	**AIA (FITF) Status** No

1. THE REQUEST FILED 03 March 2020 IS **GRANTED** .

   The above-identified application has met the requirements for prioritized examination
   - A. ☑ for an original nonprovisional application (Track I).
   - B. ☐ for an application undergoing continued examination (RCE).

2. **The above-identified application will undergo prioritized examination**. The application will be accorded special status throughout its entire course of prosecution until one of the following occurs:
   - A. filing a **petition for extension of time** to extend the time period for filing a reply;
   - B. filing an **amendment to amend the application to contain more than four independent claims, more than thirty total claims** , or a multiple dependent claim;
   - C. filing a **request for continued examination** ;
   - D. filing a notice of appeal;
   - E. filing a request for suspension of action;
   - F. mailing of a notice of allowance;
   - G. mailing of a final Office action;
   - H. completion of examination as defined in 37 CFR 41.102; or
   - I. abandonment of the application.

Telephone inquiries with regard to this decision should be directed to BRIAN BROWN at (571)272-5338. In his/her absence, calls may be directed to Petition Help Desk at (571) 272-3282.

/BRIAN W BROWN/ Petitions Examiner, OPET	

U.S. Patent and Trademark Office
PTO-2298 (Rev. 02-2012)

PTO/SB/08a (02-18)
Approved for use through 11/30/2020. OMB 0651-0031
U.S. Patent and Trademark Office; U.S. DEPARTMENT OF COMMERCE
Under the Paperwork Reduction Act of 1995, no persons are required to respond to a collection of information unless it contains a valid OMB control number.

INFORMATION DISCLOSURE STATEMENT BY APPLICANT

(Not for submission under 37 CFR 1.99)

Application Number	16808137
Filing Date	2020-03-03
First Named Inventor	Ali Shahriari
Art Unit	3774
Examiner Name	-
Attorney Docket Number	426/2/9 UTIL

U.S.PATENTS Remove

Examiner Initial*	Cite No	Patent Number	Kind Code[1]	Issue Date	Name of Patentee or Applicant of cited Document	Pages,Columns,Lines where Relevant Passages or Relevant Figures Appear
	1	5665117		1997-09-09	Rhodes	
	2	5824037		1998-10-20	Fogarty et al.	
	3	6663667		2003-12-16	Dehdashtian et al.	
	4	7175652		2007-02-13	Cook et al.	
	5	7470284		2008-12-30	Lambrecht et al.	
	6	7740656		2010-06-22	Mensah et al.	
	7	7972370		2011-07-05	Douk et al.	
	8	9370418		2016-06-21	Pintor et al.	

If you wish to add additional U.S. Patent citation information please click the Add button. Add

INFORMATION DISCLOSURE STATEMENT BY APPLICANT (Not for submission under 37 CFR 1.99)		
	Application Number	16808137
	Filing Date	2020-03-03
	First Named Inventor	Ali Shahriari
	Art Unit	3774
	Examiner Name	-
	Attorney Docket Number	426/2/9 UTIL

U.S.PATENT APPLICATION PUBLICATIONS						Remove
Examiner Initial*	Cite No	Publication Number	Kind Code[1]	Publication Date	Name of Patentee or Applicant of cited Document	Pages,Columns,Lines where Relevant Passages or Relevant Figures Appear
	1	20020052649	A1	2002-05-02	Greenhalgh	
	2	20040243221	A1	2004-12-02	Fawzi Natalie V. et al.	
	3	20040256759	A1	2004-12-23	Hartley	
	4	20070179591	A1	2007-08-02	Baker et al.	
	5	20070213815	A1	2007-09-13	Khairkhahan et al.	
	6	20070219620	A1	2007-09-20	Eells et al.	
	7	20080021547	A1	2008-01-24	Davidson	
	8	20090105805	A1	2009-04-23	Baker et al.	
	9	20100204781	A1	2010-08-12	Alkhatib	

EFS Web 2.1.18

INFORMATION DISCLOSURE STATEMENT BY APPLICANT (Not for submission under 37 CFR 1.99)	Application Number	16808137
	Filing Date	2020-03-03
	First Named Inventor	Ali Shahriari
	Art Unit	3774
	Examiner Name	-
	Attorney Docket Number	426/2/9 UTIL

	10	20120123529	A1	2012-05-17	Levi et al.	
	11	20120296418	A1	2012-11-22	Bonyuet et al.	
	12	20120123529	A1	2012-05-17	Levi et al	
	13	20130090729	A1	2013-04-11	Gregg et al.	

If you wish to add additional U.S. Published Application citation information please click the Add button. Add

FOREIGN PATENT DOCUMENTS Remove

Examiner Initial*	Cite No	Foreign Document Number[3]	Country Code[2] i	Kind Code[4]	Publication Date	Name of Patentee or Applicant of cited Document	Pages,Columns,Lines where Relevant Passages or Relevant Figures Appear	T[5]
	1	2005124959	JP	A	2005-05-19	Noisshiki et al.		
	2	2006005015	WO	A2	2006-01-12	Spenser et al.		

If you wish to add additional Foreign Patent Document citation information please click the Add button Add

NON-PATENT LITERATURE DOCUMENTS Remove

Examiner Initials*	Cite No	Include name of the author (in CAPITAL LETTERS), title of the article (when appropriate), title of the item (book, magazine, journal, serial, symposium, catalog, etc), date, pages(s), volume-issue number(s), publisher, city and/or country where published.	T[5]
	1	INTENTUS GROUP, Invalidity Search Report, STENT SEAL (US20130144373), March 30, 2020, Pgs. 1-15	

If you wish to add additional non-patent literature document citation information please click the Add button Add

EFS Web 2.1.18

INFORMATION DISCLOSURE STATEMENT BY APPLICANT (Not for submission under 37 CFR 1.99)	Application Number	16808137
	Filing Date	2020-03-03
	First Named Inventor	Ali Shahriari
	Art Unit	3774
	Examiner Name	-
	Attorney Docket Number	426/2/9 UTIL

EXAMINER SIGNATURE			
Examiner Signature		Date Considered	

*EXAMINER: Initial if reference considered, whether or not citation is in conformance with MPEP 609. Draw line through a citation if not in conformance and not considered. Include copy of this form with next communication to applicant.

[1] See Kind Codes of USPTO Patent Documents at www.USPTO.GOV or MPEP 901.04. [2] Enter office that issued the document, by the two-letter code (WIPO Standard ST.3). [3] For Japanese patent documents, the indication of the year of the reign of the Emperor must precede the serial number of the patent document. [4] Kind of document by the appropriate symbols as indicated on the document under WIPO Standard ST.16 if possible. [5] Applicant is to place a check mark here if English language translation is attached.

INFORMATION DISCLOSURE STATEMENT BY APPLICANT (Not for submission under 37 CFR 1.99)	Application Number	16808137
	Filing Date	2020-03-03
	First Named Inventor	Ali Shahriari
	Art Unit	3774
	Examiner Name	-
	Attorney Docket Number	426/2/9 UTIL

CERTIFICATION STATEMENT

Please see 37 CFR 1.97 and 1.98 to make the appropriate selection(s):

That each item of information contained in the information disclosure statement was first cited in any communication from a foreign patent office in a counterpart foreign application not more than three months prior to the filing of the information disclosure statement. See 37 CFR 1.97(e)(1).

OR

☐ That no item of information contained in the information disclosure statement was cited in a communication from a foreign patent office in a counterpart foreign application, and, to the knowledge of the person signing the certification after making reasonable inquiry, no item of information contained in the information disclosure statement was known to any individual designated in 37 CFR 1.56(c) more than three months prior to the filing of the information disclosure statement. See 37 CFR 1.97(e)(2).

See attached certification statement.

The fee set forth in 37 CFR 1.17 (p) has been submitted herewith.

☒ A certification statement is not submitted herewith.

SIGNATURE

A signature of the applicant or representative is required in accordance with CFR 1.33, 10.18. Please see CFR 1.4(d) for the form of the signature.

Signature	/Justin R. Nifong/	Date (YYYY-MM-DD)	2020-04-06
Name/Print	Justin R. Nifong	Registration Number	59389

This collection of information is required by 37 CFR 1.97 and 1.98. The information is required to obtain or retain a benefit by the public which is to file (and by the USPTO to process) an application. Confidentiality is governed by 35 U.S.C. 122 and 37 CFR 1.14. This collection is estimated to take 1 hour to complete, including gathering, preparing and submitting the completed application form to the USPTO. Time will vary depending upon the individual case. Any comments on the amount of time you require to complete this form and/or suggestions for reducing this burden, should be sent to the Chief Information Officer, U.S. Patent and Trademark Office, U.S. Department of Commerce, P.O. Box 1450, Alexandria, VA 22313-1450. DO NOT SEND FEES OR COMPLETED FORMS TO THIS ADDRESS. **SEND TO: Commissioner for Patents, P.O. Box 1450, Alexandria, VA 22313-1450.**

Privacy Act Statement

The Privacy Act of 1974 (P.L. 93-579) requires that you be given certain information in connection with your submission of the attached form related to a patent application or patent. Accordingly, pursuant to the requirements of the Act, please be advised that: (1) the general authority for the collection of this information is 35 U.S.C. 2(b)(2); (2) furnishing of the information solicited is voluntary; and (3) the principal purpose for which the information is used by the U.S. Patent and Trademark Office is to process and/or examine your submission related to a patent application or patent. If you do not furnish the requested information, the U.S. Patent and Trademark Office may not be able to process and/or examine your submission, which may result in termination of proceedings or abandonment of the application or expiration of the patent.

The information provided by you in this form will be subject to the following routine uses:

1. The information on this form will be treated confidentially to the extent allowed under the Freedom of Information Act (5 U.S.C. 552) and the Privacy Act (5 U.S.C. 552a). Records from this system of records may be disclosed to the Department of Justice to determine whether the Freedom of Information Act requires disclosure of these record s.

2. A record from this system of records may be disclosed, as a routine use, in the course of presenting evidence to a court, magistrate, or administrative tribunal, including disclosures to opposing counsel in the course of settlement negotiations.

3. A record in this system of records may be disclosed, as a routine use, to a Member of Congress submitting a request involving an individual, to whom the record pertains, when the individual has requested assistance from the Member with respect to the subject matter of the record.

4. A record in this system of records may be disclosed, as a routine use, to a contractor of the Agency having need for the information in order to perform a contract. Recipients of information shall be required to comply with the requirements of the Privacy Act of 1974, as amended, pursuant to 5 U.S.C. 552a(m).

5. A record related to an International Application filed under the Patent Cooperation Treaty in this system of records may be disclosed, as a routine use, to the International Bureau of the World Intellectual Property Organization, pursuant to the Patent Cooperation Treaty.

6. A record in this system of records may be disclosed, as a routine use, to another federal agency for purposes of National Security review (35 U.S.C. 181) and for review pursuant to the Atomic Energy Act (42 U.S.C. 218(c)).

7. A record from this system of records may be disclosed, as a routine use, to the Administrator, General Services, or his/her designee, during an inspection of records conducted by GSA as part of that agency's responsibility to recommend improvements in records management practices and programs, under authority of 44 U.S.C. 2904 and 2906. Such disclosure shall be made in accordance with the GSA regulations governing inspection of records for this purpose, and any other relevant (i.e., GSA or Commerce) directive. Such disclosure shall not be used to make determinations about individuals.

8. A record from this system of records may be disclosed, as a routine use, to the public after either publication of the application pursuant to 35 U.S.C. 122(b) or issuance of a patent pursuant to 35 U.S.C. 151. Further, a record may be disclosed, subject to the limitations of 37 CFR 1.14, as a routine use, to the public if the record was filed in an application which became abandoned or in which the proceedings were terminated and which application is referenced by either a published application, an application open to public inspections or an issued patent.

9. A record from this system of records may be disclosed, as a routine use, to a Federal, State, or local law enforcement agency, if the USPTO becomes aware of a violation or potential violation of law or regulation.

Electronic Acknowledgement Receipt

EFS ID:	39069179
Application Number:	16808137
International Application Number:	
Confirmation Number:	1706
Title of Invention:	DEVICE FOR ENDOVASCULAR AORTIC REPAIR AND METHOD OF USING THE SAME
First Named Inventor/Applicant Name:	Ali Shahriari
Customer Number:	115007
Filer:	Justin Robert Nifong/Donna Donovan
Filer Authorized By:	Justin Robert Nifong
Attorney Docket Number:	426/2/9 UTIL
Receipt Date:	06-APR-2020
Filing Date:	03-MAR-2020
Time Stamp:	12:15:39
Application Type:	Utility under 35 USC 111(a)

Payment information:

Submitted with Payment	no

File Listing:

Document Number	Document Description	File Name	File Size(Bytes)/ Message Digest	Multi Part /.zip	Pages (if appl.)
1	Information Disclosure Statement (IDS) Form (SB08)	426-2-9UTIL-20200406-IDS.pdf	1035037 62cddeb56af8d1e4fa23c85f58f78336c05e6d37	no	6

Warnings:

Information:					
2	Foreign Reference	WO2006005015A2.pdf	4643077 b6d6515adf4af7412484dccaec0e03ce9c6a3787	no	68
Warnings:					
Information:					
3	Foreign Reference	JP2005124959A.pdf	3351951 adf71d0774b86612a752e390badc0860e9b13d2b	no	79
Warnings:					
Information:					
4	Non Patent Literature	Final-Invalidity-Report-20200330.pdf	406129 79cb1742e4124af655b397beb431bd4f127829bd	no	15
Warnings:					
The page size in the PDF is too large. The pages should be 8.5 x 11 or A4. If this PDF is submitted, the pages will be resized upon entry into the Image File Wrapper and may affect subsequent processing					
Information:					
			Total Files Size (in bytes):	9436194	

This Acknowledgement Receipt evidences receipt on the noted date by the USPTO of the indicated documents, characterized by the applicant, and including page counts, where applicable. It serves as evidence of receipt similar to a Post Card, as described in MPEP 503.

New Applications Under 35 U.S.C. 111
If a new application is being filed and the application includes the necessary components for a filing date (see 37 CFR 1.53(b)-(d) and MPEP 506), a Filing Receipt (37 CFR 1.54) will be issued in due course and the date shown on this Acknowledgement Receipt will establish the filing date of the application.
National Stage of an International Application under 35 U.S.C. 371
If a timely submission to enter the national stage of an international application is compliant with the conditions of 35 U.S.C. 371 and other applicable requirements a Form PCT/DO/EO/903 indicating acceptance of the application as a national stage submission under 35 U.S.C. 371 will be issued in addition to the Filing Receipt, in due course.
New International Application Filed with the USPTO as a Receiving Office
If a new international application is being filed and the international application includes the necessary components for an international filing date (see PCT Article 11 and MPEP 1810), a Notification of the International Application Number and of the International Filing Date (Form PCT/RO/105) will be issued in due course, subject to prescriptions concerning national security, and the date shown on this Acknowledgement Receipt will establish the international filing date of the application.

UNITED STATES PATENT AND TRADEMARK OFFICE

UNITED STATES DEPARTMENT OF COMMERCE
United States Patent and Trademark Office
Address: COMMISSIONER FOR PATENTS
P.O. Box 1450
Alexandria, Virginia 22313-1450
www.uspto.gov

APPLICATION NUMBER	FILING or 371(c) DATE	GRP ART UNIT	FIL FEE REC'D	ATTY.DOCKET.NO	TOT CLAIMS	IND CLAIMS
16/808,137	03/03/2020	3774	785	426/2/9 UTIL	10	2

CONFIRMATION NO. 1706

FILING RECEIPT

115007
NK Patent Law
4917 Waters Edge Drive
Suite 275
Raleigh, NC 27606

OC000000115494823

Date Mailed: 03/18/2020

Receipt is acknowledged of this non-provisional utility patent application. The application will be taken up for examination in due course. Applicant will be notified as to the results of the examination. Any correspondence concerning the application must include the following identification information: the U.S. APPLICATION NUMBER, FILING DATE, NAME OF FIRST INVENTOR, and TITLE OF INVENTION. Fees transmitted by check or draft are subject to collection.

Please verify the accuracy of the data presented on this receipt. If an error is noted on this Filing Receipt, please submit a written request for a corrected Filing Receipt, including a properly marked-up ADS showing the changes with strike-through for deletions and underlining for additions. If you received a "Notice to File Missing Parts" or other Notice requiring a response for this application, please submit any request for correction to this Filing Receipt with your reply to the Notice. When the USPTO processes the reply to the Notice, the USPTO will generate another Filing Receipt incorporating the requested corrections provided that the request is grantable.

Inventor(s)

Ali Shahriari, Boca Raton, FL;

Applicant(s)

Aortic Innovations, LLC, Boca Raton, FL;

Power of Attorney: None

Domestic Priority data as claimed by applicant

This application is a CON of 16/736,879 01/08/2020
which is a CON of 16/042,286 07/23/2018 PAT 10555823
which is a CON of 14/614,628 02/05/2015 PAT 10028848
which is a CON of 14/569,306 12/12/2014 PAT 9339399
which is a DIV of 13/706,896 12/06/2012 PAT 8940040
which claims benefit of 61/723,446 11/07/2012
and claims benefit of 61/567,458 12/06/2011

Foreign Applications for which priority is claimed (You may be eligible to benefit from the **Patent Prosecution Highway** program at the USPTO. Please see http://www.uspto.gov for more information.) - None.
Foreign application information must be provided in an Application Data Sheet in order to constitute a claim to foreign priority. See 37 CFR 1.55 and 1.76.

Permission to Access Application via Priority Document Exchange: Yes

Permission to Access Search Results: Yes

Applicant may provide or rescind an authorization for access using Form PTO/SB/39 or Form PTO/SB/69 as appropriate.

If Required, Foreign Filing License Granted: 03/17/2020
The country code and number of your priority application, to be used for filing abroad under the Paris Convention, is **US 16/808,137**
Projected Publication Date: 06/25/2020
Non-Publication Request: No
Early Publication Request: No
**** SMALL ENTITY ****
Title

DEVICE FOR ENDOVASCULAR AORTIC REPAIR AND METHOD OF USING THE SAME

Preliminary Class

623

Statement under 37 CFR 1.55 or 1.78 for AIA (First Inventor to File) Transition Applications: No

PROTECTING YOUR INVENTION OUTSIDE THE UNITED STATES

Since the rights granted by a U.S. patent extend only throughout the territory of the United States and have no effect in a foreign country, an inventor who wishes patent protection in another country must apply for a patent in a specific country or in regional patent offices. Applicants may wish to consider the filing of an international application under the Patent Cooperation Treaty (PCT). An international (PCT) application generally has the same effect as a regular national patent application in each PCT-member country. The PCT process **simplifies** the filing of patent applications on the same invention in member countries, but **does not result** in a grant of "an international patent" and does not eliminate the need of applicants to file additional documents and fees in countries where patent protection is desired.

Almost every country has its own patent law, and a person desiring a patent in a particular country must make an application for patent in that country in accordance with its particular laws. Since the laws of many countries differ in various respects from the patent law of the United States, applicants are advised to seek guidance from specific foreign countries to ensure that patent rights are not lost prematurely.

Applicants also are advised that in the case of inventions made in the United States, the Director of the USPTO must issue a license before applicants can apply for a patent in a foreign country. The filing of a U.S. patent application serves as a request for a foreign filing license. The application's filing receipt contains further information and guidance as to the status of applicant's license for foreign filing.

Applicants may wish to consult the USPTO booklet, "General Information Concerning Patents" (specifically, the section entitled "Treaties and Foreign Patents") for more information on timeframes and deadlines for filing foreign patent applications. The guide is available either by contacting the USPTO Contact Center at 800-786-9199, or it can be viewed on the USPTO website at http://www.uspto.gov/web/offices/pac/doc/general/index.html.

For information on preventing theft of your intellectual property (patents, trademarks and copyrights), you may wish to consult the U.S. Government website, http://www.stopfakes.gov. Part of a Department of Commerce initiative,

this website includes self-help "toolkits" giving innovators guidance on how to protect intellectual property in specific countries such as China, Korea and Mexico. For questions regarding patent enforcement issues, applicants may call the U.S. Government hotline at 1-866-999-HALT (1-866-999-4258).

LICENSE FOR FOREIGN FILING UNDER

Title 35, United States Code, Section 184

Title 37, Code of Federal Regulations, 5.11 & 5.15

GRANTED

The applicant has been granted a license under 35 U.S.C. 184, if the phrase "IF REQUIRED, FOREIGN FILING LICENSE GRANTED" followed by a date appears on this form. Such licenses are issued in all applications where the conditions for issuance of a license have been met, regardless of whether or not a license may be required as set forth in 37 CFR 5.15. The scope and limitations of this license are set forth in 37 CFR 5.15(a) unless an earlier license has been issued under 37 CFR 5.15(b). The license is subject to revocation upon written notification. The date indicated is the effective date of the license, unless an earlier license of similar scope has been granted under 37 CFR 5.13 or 5.14.

This license is to be retained by the licensee and may be used at any time on or after the effective date thereof unless it is revoked. This license is automatically transferred to any related applications(s) filed under 37 CFR 1.53(d). This license is not retroactive.

The grant of a license does not in any way lessen the responsibility of a licensee for the security of the subject matter as imposed by any Government contract or the provisions of existing laws relating to espionage and the national security or the export of technical data. Licensees should apprise themselves of current regulations especially with respect to certain countries, of other agencies, particularly the Office of Defense Trade Controls, Department of State (with respect to Arms, Munitions and Implements of War (22 CFR 121-128)); the Bureau of Industry and Security, Department of Commerce (15 CFR parts 730-774); the Office of Foreign AssetsControl, Department of Treasury (31 CFR Parts 500+) and the Department of Energy.

NOT GRANTED

No license under 35 U.S.C. 184 has been granted at this time, if the phrase "IF REQUIRED, FOREIGN FILING LICENSE GRANTED" DOES NOT appear on this form. Applicant may still petition for a license under 37 CFR 5.12, if a license is desired before the expiration of 6 months from the filing date of the application. If 6 months has lapsed from the filing date of this application and the licensee has not received any indication of a secrecy order under 35 U.S.C. 181, the licensee may foreign file the application pursuant to 37 CFR 5.15(b).

SelectUSA

The United States represents the largest, most dynamic marketplace in the world and is an unparalleled location for business investment, innovation, and commercialization of new technologies. The U.S. offers tremendous resources and advantages for those who invest and manufacture goods here. Through SelectUSA, our nation works to promote and facilitate business investment. SelectUSA provides information assistance to the international investor community; serves as an ombudsman for existing and potential investors; advocates on behalf of U.S. cities, states, and regions competing for global investment; and counsels U.S. economic development organizations on investment attraction best practices. To learn more about why the United States is the best country in the world to develop

technology, manufacture products, deliver services, and grow your business, visit http://www.SelectUSA.gov or call +1-202-482-6800.

PATENT APPLICATION FEE DETERMINATION RECORD Substitute for Form PTO-875	Application or Docket Number 16/808,137

APPLICATION AS FILED - PART I

FOR	(Column 1) NUMBER FILED	(Column 2) NUMBER EXTRA	SMALL ENTITY RATE($)	SMALL ENTITY FEE($)	OR	OTHER THAN SMALL ENTITY RATE($)	OTHER THAN SMALL ENTITY FEE($)
BASIC FEE (37 CFR 1.16(a), (b), or (c))	N/A	N/A	N/A	75		N/A	
SEARCH FEE (37 CFR 1.16(k), (i), or (m))	N/A	N/A	N/A	330		N/A	
EXAMINATION FEE (37 CFR 1.16(o), (p), or (q))	N/A	N/A	N/A	380		N/A	
TOTAL CLAIMS (37 CFR 1.16(i))	10 minus 20 =	*	x 50 =	0.00	OR		
INDEPENDENT CLAIMS (37 CFR 1.16(h))	2 minus 3 =	*	x 230 =	0.00			
APPLICATION SIZE FEE (37 CFR 1.16(s))	If the specification and drawings exceed 100 sheets of paper, the application size fee due is $310 ($155 for small entity) for each additional 50 sheets or fraction thereof. See 35 U.S.C. 41(a)(1)(G) and 37 CFR 1.16(s).			0.00			
MULTIPLE DEPENDENT CLAIM PRESENT (37 CFR 1.16(j))				0.00			
* If the difference in column 1 is less than zero, enter "0" in column 2.			TOTAL	785		TOTAL	

APPLICATION AS AMENDED - PART II

		(Column 1) CLAIMS REMAINING AFTER AMENDMENT		(Column 2) HIGHEST NUMBER PREVIOUSLY PAID FOR	(Column 3) PRESENT EXTRA	SMALL ENTITY RATE($)	SMALL ENTITY ADDITIONAL FEE($)	OR	OTHER THAN SMALL ENTITY RATE($)	OTHER THAN SMALL ENTITY ADDITIONAL FEE($)
AMENDMENT A	Total (37 CFR 1.16(i))	*	Minus	**	=	x =		OR	x =	
AMENDMENT A	Independent (37 CFR 1.16(h))	*	Minus	***	=	x =		OR	x =	
AMENDMENT A	Application Size Fee (37 CFR 1.16(s))									
AMENDMENT A	FIRST PRESENTATION OF MULTIPLE DEPENDENT CLAIM (37 CFR 1.16(j))							OR		
						TOTAL ADD'L FEE		OR	TOTAL ADD'L FEE	

		(Column 1) CLAIMS REMAINING AFTER AMENDMENT		(Column 2) HIGHEST NUMBER PREVIOUSLY PAID FOR	(Column 3) PRESENT EXTRA	RATE($)	ADDITIONAL FEE($)		RATE($)	ADDITIONAL FEE($)
AMENDMENT B	Total (37 CFR 1.16(i))	*	Minus	**	=	x =		OR	x =	
AMENDMENT B	Independent (37 CFR 1.16(h))	*	Minus	***	=	x =		OR	x =	
AMENDMENT B	Application Size Fee (37 CFR 1.16(s))									
AMENDMENT B	FIRST PRESENTATION OF MULTIPLE DEPENDENT CLAIM (37 CFR 1.16(j))							OR		
						TOTAL ADD'L FEE		OR	TOTAL ADD'L FEE	

* If the entry in column 1 is less than the entry in column 2, write "0" in column 3.
** If the "Highest Number Previously Paid For" IN THIS SPACE is less than 20, enter "20".
*** If the "Highest Number Previously Paid For" IN THIS SPACE is less than 3, enter "3".
The "Highest Number Previously Paid For" (Total or Independent) is the highest found in the appropriate box in column 1.

PTO/SB/08a (02-18)
Approved for use through 11/30/2020. OMB 0651-0031
U.S. Patent and Trademark Office; U.S. DEPARTMENT OF COMMERCE
Under the Paperwork Reduction Act of 1995, no persons are required to respond to a collection of information unless it contains a valid OMB control number.

INFORMATION DISCLOSURE STATEMENT BY APPLICANT

(Not for submission under 37 CFR 1.99)

Application Number	16808137
Filing Date	2020-03-03
First Named Inventor	Ali Shahriari
Art Unit	-
Examiner Name	-
Attorney Docket Number	426/2/9 UTIL

U.S.PATENTS Remove

Examiner Initial*	Cite No	Patent Number	Kind Code[1]	Issue Date	Name of Patentee or Applicant of cited Document	Pages,Columns,Lines where Relevant Passages or Relevant Figures Appear
	1	8002826	B2	2011-08-23	SEGUIN	
	2	7947074	B2	2011-05-24	MERETEI	
	3	7799072	B2	2010-09-21	GREENBERG	
	4	8002826	B2	2011-08-23	SEGUIN	
	5	6258117	B2	2001-07-10	CAMRUD et al.	
	6	7018404	B2	2006-03-28	HOLMBERG et al.	
	7	7393360	B2	2008-07-01	SPENSER et al.	
	8	7510574	B2	2009-03-31	LE et al.	

INFORMATION DISCLOSURE STATEMENT BY APPLICANT (Not for submission under 37 CFR 1.99)	Application Number	16808137
	Filing Date	2020-03-03
	First Named Inventor	Ali Shahriari
	Art Unit	-
	Examiner Name	-
	Attorney Docket Number	426/2/9 UTIL

	9	8016877	B2	2011-09-13	SEGUIN et al.	
	10	7252682	B2	2007-08-07	SEGUIN	
	11	8206438	B2	2012-06-26	YANG et al.	
	12	7780726	B2	2010-08-24	SEGUIN	
	13	5397355	A	1995-03-14	MARTIN et al.	
	14	7771467	B2	2010-08-10	SVENSSON	
	15	7799072	B2	2010-09-21	GREENBERG	
	16	6582462	B1	2003-06-24	ANDERSEN et al.	
	17	8226710	B2	2012-07-24	NGUYEN et al.	
	18	5102417	A	1992-04-07	PALMAZ	
	19	7914569	B2	2011-03-29	NGUYEN et al.	

INFORMATION DISCLOSURE STATEMENT BY APPLICANT (Not for submission under 37 CFR 1.99)	Application Number	16808137
	Filing Date	2020-03-03
	First Named Inventor	Ali Shahriari
	Art Unit	-
	Examiner Name	-
	Attorney Docket Number	426/2/9 UTIL

	20	5716393		1998-02-10	LINDBERG et al.	
	21	6254632	B1	2001-07-03	WU et al.	
	22	6334868	B1	2002-01-01	HAM	
	23	6752829	B2	2004-06-22	KOCUR et al.	
	24	8425584	B2	2013-04-23	CULLY et al.	
	25	5061275		1991-10-29	WALLSTEN et al.	
	26	5718159		1998-02-17	THOMPSON	
	27	5957974		1999-09-28	THOMPSON et al.	
	28	6004346		1999-12-21	WOLFF et al.	
	29	7588597	B2	2009-09-15	FRID	
	30	8394119	B2	2013-03-12	ZAVER et al.	

INFORMATION DISCLOSURE STATEMENT BY APPLICANT (Not for submission under 37 CFR 1.99)	Application Number	16808137
	Filing Date	2020-03-03
	First Named Inventor	Ali Shahriari
	Art Unit	-
	Examiner Name	-
	Attorney Docket Number	426/2/9 UTIL

	31	8398701		2013-03-19	BEREZ et al.	
	32	8414635		2013-04-09	HYODOH et al.	
	33	8419788		2013-04-16	SHELDON et al.	
	34	8617234		2013-12-31	GARCIA et al.	
	35	8623067		2014-01-07	BEREZ et al.	
	36	8715317		2014-05-06	JANARDHAN et al.	
	37	8721676		2014-05-13	JANARDHAN et al.	
	38	8911490		2014-12-16	PERKINS et al.	
	39	9005270		2015-04-14	PERKINS et al.	
	40	9034007		2015-05-19	JANARDHAN	
	41	9095343		2015-08-04	BEREZ et al.	

INFORMATION DISCLOSURE STATEMENT BY APPLICANT (Not for submission under 37 CFR 1.99)	Application Number	16808137
	Filing Date	2020-03-03
	First Named Inventor	Ali Shahriari
	Art Unit	-
	Examiner Name	-
	Attorney Docket Number	426/2/9 UTIL

	42	9114001		2015-08-25	KUSLEIKA et al.	
	43	9157174		2015-10-13	KUSLEIKA	
	44	9179931		2015-11-10	JANARDHAN et al.	
	45	9220899		2015-12-29	CATTANEO et al.	
	46	9314324		2016-04-19	JANARDHAN et al.	
	47	9358140		2016-06-07	CONNOR et al.	
	48	9393021		2016-07-19	GARCIA et al.	
	49	9393136		2016-07-19	PERKINS et al.	
	50	9452070		2016-09-27	KUSLEIKA	
	51	9943427		2018-04-17	LOSORDO et al.	
	52	6918925	B2	2005-07-19	TEHRANI	

INFORMATION DISCLOSURE STATEMENT BY APPLICANT (Not for submission under 37 CFR 1.99)		
	Application Number	16808137
	Filing Date	2020-03-03
	First Named Inventor	Ali Shahriari
	Art Unit	-
	Examiner Name	-
	Attorney Docket Number	426/2/9 UTIL

	53	7294146	B2	2005-07-19	TEHRANI	
	54	8021408	B2	2011-09-20	KANG et al.	
	55	8603156	B2	2013-12-10	HARTLEY et al.	
	56	8864808	B2	2014-10-21	GREENBERG et al.	
	57	9269739	B2	2016-02-23	MOLLARD et al.	
	58	9561102	B2	2017-02-07	RUST et al.	
	59	9629739	B2	2017-04-25	SLAZAS et al.	
	60	5976179	A	1999-11-02	INOUE	
	61	8940040	B2	2015-01-27	SHAHRIARI	
	62	10028848	B2	2018-07-24	SHAHRIARI	
	63	9833341	B2	2017-12-05	BOGENSCHUETZ et al.	

INFORMATION DISCLOSURE STATEMENT BY APPLICANT (Not for submission under 37 CFR 1.99)	Application Number	16808137
	Filing Date	2020-03-03
	First Named Inventor	Ali Shahriari
	Art Unit	-
	Examiner Name	-
	Attorney Docket Number	426/2/9 UTIL

	64	10321985	B2	2019-06-18	BARTHOLD et al.	
	65	5609627		1997-03-11	Goicoechea et al.	
	66	6464721		2002-10-15	Marcade et al.	
	67	6773457		2004-08-10	Ivancev et al.	
	68	6814752		2004-11-09	Chuter	
	69	7074235		2006-07-11	Roy	
	70	7306623		2007-12-11	Watson	
	71	7998187		2011-08-16	Hartley et al.	
	72	8002816		2011-08-23	Greenberg	
	73	8025694		2011-09-27	Strauss et al.	
	74	8545549		2013-10-01	Hartley et al.	

INFORMATION DISCLOSURE STATEMENT BY APPLICANT (Not for submission under 37 CFR 1.99)	Application Number	16808137
	Filing Date	2020-03-03
	First Named Inventor	Ali Shahriari
	Art Unit	-
	Examiner Name	-
	Attorney Docket Number	426/2/9 UTIL

	75	8562673		2013-10-22	Yeung et al.	
	76	8652198		2014-02-18	Andreas et al.	
	77	8715337		2014-05-06	Chuter	
	78	9220613		2015-12-29	Arnault De La Menardiere et al.	
	79	9289282		2016-03-22	Olson et al.	
	80	10034784		2018-07-31	Tang	
	81	8506622	B2	2013-08-13	Bruszewski, et al.	
	82	9757263	B2	2017-09-12	Roeder, et al.	
	83	6482228	B1	2002-11-19	Norred	

If you wish to add additional U.S. Patent citation information please click the Add button. Add

U.S.PATENT APPLICATION PUBLICATIONS Remove

Examiner Initial*	Cite No	Publication Number	Kind Code[1]	Publication Date	Name of Patentee or Applicant of cited Document	Pages,Columns,Lines where Relevant Passages or Relevant Figures Appear

EFS Web 2.1.18

INFORMATION DISCLOSURE STATEMENT BY APPLICANT (Not for submission under 37 CFR 1.99)		
	Application Number	16808137
	Filing Date	2020-03-03
	First Named Inventor	Ali Shahriari
	Art Unit	-
	Examiner Name	-
	Attorney Docket Number	426/2/9 UTIL

	1	20040210304	A1	2004-10-21	SEGUIN et al.	
	2	20120046726	A1	2012-02-23	CHUTER	
	3	20070095283	A1	2007-05-03	GALEWSKI	
	4	20090125098	A1	2009-05-04	CHUTER	
	5	20110257731	A1	2011-10-20	HARTLEY et al.	
	6	20030040771	A1	2003-02-27	HYODOH et al.	
	7	20050197687	A1	2005-09-08	MOLAEI, et al.	
	8	20060149351	A1	2006-07-06	SMIRTHWAITE, et al.	
	9	20070250146	A1	2007-10-25	CULLY, et al.	
	10	20070276464	A1	2007-11-29	VALENCIA, et al.	
	11	20080132999	A1	2008-06-05	MERICLE,et al.	

INFORMATION DISCLOSURE STATEMENT BY APPLICANT (Not for submission under 37 CFR 1.99)	Application Number	16808137
	Filing Date	2020-03-03
	First Named Inventor	Ali Shahriari
	Art Unit	-
	Examiner Name	-
	Attorney Docket Number	426/2/9 UTIL

	12	20090099644	A1	2009-04-16	BIADILLAH et al.	
	13	20090198315	A1	2009-08-06	BOUDJEMLINE	
	14	20100042202	A1	2010-02-18	RAMZIPOOR et al.	
	15	20120089218	A1	2012-04-12	DARDI	
	16	20140172064	A1	2014-06-19	KELLY	
	17	20090312834	A1	2009-12-17	WOOD et al.	
	18	20160022450	A1	2016-01-28	HEHRLEIN	
	19	20140046428	A1	2014-02-13	CRAGG et al.	
	20	20160270935	A1	2016-09-22	RASMUSSEN et al.	
	21	20070067014	A1	2007-03-22	KE et al.	
	22	20080132993	A1	2005-06-05	RASMUSSEN et al.	

INFORMATION DISCLOSURE STATEMENT BY APPLICANT (Not for submission under 37 CFR 1.99)	Application Number	16808137
	Filing Date	2020-03-03
	First Named Inventor	Ali Shahriari
	Art Unit	-
	Examiner Name	-
	Attorney Docket Number	426/2/9 UTIL

	23	20100094409	A1	2010-04-15	BARKER et al.	
	24	20140336749	A1	2014-11-13	BOGENSCHUETZ et al.	
	25	20080275548	A1	2008-11-06	SVENSSON LARS G	
	26	20090171456	A1	2009-07-02	KVEEN et al.	
	27	20170209254	A1	2017-07-27	BARTHOLD et al.	
	28	20080262592	A1	2008-10-23	JORDAN et al.	
	29	20020177890	A1	2002-11-28	LENKER	
	30	20060155366	A1	2006-07-13	LADUCA et al.	
	31	20100049313	A1	2010-02-25	ALON et al.	
	32	20140316513	A1	2014-10-23	TANG	
	33	20070168013	A1	2007-07-19	DOUGLAS	

INFORMATION DISCLOSURE STATEMENT BY APPLICANT (Not for submission under 37 CFR 1.99)	Application Number	16808137
	Filing Date	2020-03-03
	First Named Inventor	Ali Shahriari
	Art Unit	-
	Examiner Name	-
	Attorney Docket Number	426/2/9 UTIL

	34	20130144373	A1	2013-06-06	SHAHRIARI	
	35	20070203559	A1	2007-08-30	FREUDENTHAL	
	36	20050043790	A1	2005-02-24	SEGUIN	
	37	20010044650	A1	2001-11-22	Simso Eric J. et al.	
	38	20020082684	A1	2002-06-27	Mishaly	
	39	20040249399	A1	2004-12-09	Cinquin et al.	
	40	20070219613	A1	2007-09-20	Kao et al.	
	41	20090036977	A1	2009-02-05	Rassat et al.	
	42	20090099650	A1	2009-04-16	Bolduc et al.	
	43	20100087907	A1	2010-04-08	Lattouf	
	44	20130013050	A1	2013-01-10	v	

INFORMATION DISCLOSURE STATEMENT BY APPLICANT (Not for submission under 37 CFR 1.99)		
	Application Number	16808137
	Filing Date	2020-03-03
	First Named Inventor	Ali Shahriari
	Art Unit	-
	Examiner Name	-
	Attorney Docket Number	426/2/9 UTIL

If you wish to add additional U.S. Published Application citation information please click the Add button. Add

FOREIGN PATENT DOCUMENTS Remove

Examiner Initial*	Cite No	Foreign Document Number[3]	Country Code[2] i	Kind Code[4]	Publication Date	Name of Patentee or Applicant of cited Document	Pages,Columns,Lines where Relevant Passages or Relevant Figures Appear	T[5]
	1	2012147675	WO	A1	2014-07-28	PIOLAX MEDICAL DEVICES, INC.		
	2	2004089249	WO	A1	2004-10-21	HARTLEY et al.		
	3	2013086132	WO	A1	2013-06-13	AORTIC INNOVATIONS LLC	English equivalent US2013144373A1 provided	
	4	2787925	EP	A1	2014-10-15	AORTIC INNOVATIONS LLC	English equivalent US2013144373A1 provided	
	5	102014114747	DE	A1	2016-04-14	JOTEC GmbH	English equivalent US2017209254A1 provided	
	6	2011502628	JP	A	2011-01-27	COOK INCORPORATED	English equivalent US2009125098A1 provided	
	7	2011507658	JP	A	2011-03-10	BOSTON SCIENTIFIC LIMITED	English equivalent US2009171456A1 provided	
	8	2011035154	WO	A1	2011-03-24	THE REGENTS OF THE UNIVERSITY OF CALIFORNIA		
	9	2006127412	WO	A1	2006-11-30	CLEVELAND CLINIC FOUNDATION		

EFS Web 2.1.18

INFORMATION DISCLOSURE STATEMENT BY APPLICANT (Not for submission under 37 CFR 1.99)	Application Number	16808137
	Filing Date	2020-03-03
	First Named Inventor	Ali Shahriari
	Art Unit	-
	Examiner Name	-
	Attorney Docket Number	426/2/9 UTIL

	10	2010031060	WO	A1	2010-03-18	MEDTRONIC VENTOR TECHNOLOGIES		
	11	2010006627	WO	A1	2010-01-21	CENTOLA MARCOS		
	12	03003949	WO	A2	2003-01-16	SEGUIN JACQUES	English equivalent US2005043790A1 provided	
	13	102014805	CN	A	2011-04-13	BOLTON MEDICAL INC.		
	14	2010105195	WO	A2	2010-09-16	BOLTON MEDICAL INC.		
	15	0187180	WO	A2	2001-11-22	XTENT MEDICAL INC		
	16	2005087117	WO	A1	2005-09-22	PFM PROD FUER DIE MED AG	English equivalent US2007203559A1 provided	
	17	2013040663	WO	A1	2013-03-28	Lourenco et al.		
	18	2013059596	WO	A1	2013-04-25	Madjorov et al.		
	19	2014072501	WO	A2	2014-05-15	Danner et al.		
	20	10065824	DE		2018-10-31	JOTEC GmbH		

EFS Web 2.1.18

INFORMATION DISCLOSURE STATEMENT BY APPLICANT (Not for submission under 37 CFR 1.99)	Application Number	16808137
	Filing Date	2020-03-03
	First Named Inventor	Ali Shahriari
	Art Unit	-
	Examiner Name	-
	Attorney Docket Number	426/2/9 UTIL

	21	19857887	DE		2000-07-06	FRAUNHOFER GES FORSCHUNG FIGULLA HANS-REINER ET AL		

If you wish to add additional Foreign Patent Document citation information please click the Add button Add

NON-PATENT LITERATURE DOCUMENTS Remove

Examiner Initials*	Cite No	Include name of the author (in CAPITAL LETTERS), title of the article (when appropriate), title of the item (book, magazine, journal, serial, symposium, catalog, etc), date, pages(s), volume-issue number(s), publisher, city and/or country where published.	T5
	1	SINGH, et al. "A biometric Approach For Designing Stent-Graft Structures: Caterpillar Cuticle as Design Model", Journal of the Mechanical Behavior of Biomedical Materials, Vol. 30, February 2014, 3 pages, accessed at www.sciencedirect.com/science/article/pii/S175161611300341X	
	2	ISA/US; International Search Report and Written Opinion for International Patent Application No. PCT/US2012/068165, dated February 15, 2013, 8 pages.	
	3	PIAZZA, et al., "Anatomy of the Aortic Valvar Complex and Its Implications for Transcatheter Implantation of the Aortic Valve", Circulation: Cardiovascular Interventions, Journal of the American Heart Association, 2008, 10 pages.	
	4	STOECKEL et al., "A Survey of Stent Designs", NDC, 2002, pages 137-147.	
	5	WIPO; International Preliminary Report on Patentability for International Patent Application No. PCT/US2012/068165, dated June 10, 2014, 7 pages.	
	6	CIPO; Office Action for Canadian Patent Application No. 2,858,390 dated July 27, 2015, 3 pages.	
	7	CNIPA; Office Action for Chinese Patent Application No. 2012800577516 dated May 6, 2015, 6 pages.	
	8	EPO; Extended European Search Report for European Patent Application No. 18153473.6 dated July 23, 2018.	

INFORMATION DISCLOSURE STATEMENT BY APPLICANT (Not for submission under 37 CFR 1.99)	Application Number	16808137
	Filing Date	2020-03-03
	First Named Inventor	Ali Shahriari
	Art Unit	-
	Examiner Name	-
	Attorney Docket Number	426/2/9 UTIL

	9	JPO; Japanese Patent Office for Japanese Patent Application No. 2017-078010, dated February 20, 2018.	
	10	CIPO; Office Action for Canadian Patent Application No. 2,858,390 dated August 24, 2017.	
	11	EPO; Examination Report for European Patent Application No. 12854807.0 dated September 1, 2016.	
	12	JPO; Office Action for Japanese Patent Application No. 2018-206631, dated October 23, 2019, 9 pages.	
	13	CNIPA; Office Action for Chinese Patent Application No. 201680007062.2 dated September 29, 2018, 15 pages.	
	14	EPO; Extended European Search Report for European Patent Application No. 16735541.1 dated July 20, 2018, 8 pages.	☒
	15	EPO; Extended European Search Report in European Patent Application No. 16743828.2 dated September 25, 2018.	☐
	16	USPTO; Non-Final Office Action for U.S. Patent Application No. 13/706,896 dated July 18, 2014, 10 pages.	☐
	17	USPTO; Non-Final Office Action for U.S. Patent Application No. 14/569,306 dated February 12, 2016, 6 pages.	☐
	18	USPTO; Non-Final Office Action for U.S. Patent Application No. 14/614,628 dated September 22, 2017, 8 pages.	☐
	19	USPTO; Non-Final Office Action for U.S. Patent Application No. 14/614,628 dated June 6, 2017, 9 pages.	☐

INFORMATION DISCLOSURE STATEMENT BY APPLICANT (Not for submission under 37 CFR 1.99)	Application Number	16808137
	Filing Date	2020-03-03
	First Named Inventor	Ali Shahriari
	Art Unit	-
	Examiner Name	-
	Attorney Docket Number	426/2/9 UTIL

	20	USPTO; Non-Final Office Action for U.S. Patent Application No. 14/614,628 dated March 25, 2016, 9 pages.	☐
	21	USPTO; Non-Final Office Action for U.S. Patent Application No. 16/042,286 dated July 29, 2019, 5 pages.	☐
	22	DI BARTOLOMEO, et al., "Frozen elephant trunk surgery using the E-vita open plus prosthesis", Masters of Cardiothoracic Surgery, Annals Cardiothoracic Surgery, 2013, Vol. 2. No. 5, pages 656-659.	☐
	23	INTENTUS GROUP, INTELLECTUAL PROPERTY SEARCH SERVICES, Two-Part Arterial Stent with Seal, March 1, 2020, Pgs. 1-19	☐

If you wish to add additional non-patent literature document citation information please click the Add button Add

EXAMINER SIGNATURE

Examiner Signature		Date Considered	

*EXAMINER: Initial if reference considered, whether or not citation is in conformance with MPEP 609. Draw line through a citation if not in conformance and not considered. Include copy of this form with next communication to applicant.

[1] See Kind Codes of USPTO Patent Documents at www.USPTO.GOV or MPEP 901.04. [2] Enter office that issued the document, by the two-letter code (WIPO Standard ST.3). [3] For Japanese patent documents, the indication of the year of the reign of the Emperor must precede the serial number of the patent document. [4] Kind of document by the appropriate symbols as indicated on the document under WIPO Standard ST.16 if possible. [5] Applicant is to place a check mark here if English language translation is attached.

INFORMATION DISCLOSURE STATEMENT BY APPLICANT (Not for submission under 37 CFR 1.99)	Application Number	16808137
	Filing Date	2020-03-03
	First Named Inventor	Ali Shahriari
	Art Unit	-
	Examiner Name	-
	Attorney Docket Number	426/2/9 UTIL

CERTIFICATION STATEMENT

Please see 37 CFR 1.97 and 1.98 to make the appropriate selection(s):

That each item of information contained in the information disclosure statement was first cited in any communication from a foreign patent office in a counterpart foreign application not more than three months prior to the filing of the information disclosure statement. See 37 CFR 1.97(e)(1).

OR

☐ That no item of information contained in the information disclosure statement was cited in a communication from a foreign patent office in a counterpart foreign application, and, to the knowledge of the person signing the certification after making reasonable inquiry, no item of information contained in the information disclosure statement was known to any individual designated in 37 CFR 1.56(c) more than three months prior to the filing of the information disclosure statement. See 37 CFR 1.97(e)(2).

See attached certification statement.

The fee set forth in 37 CFR 1.17 (p) has been submitted herewith.

☒ A certification statement is not submitted herewith.

SIGNATURE

A signature of the applicant or representative is required in accordance with CFR 1.33, 10.18. Please see CFR 1.4(d) for the form of the signature.

Signature	/Justin R. Nifong/	Date (YYYY-MM-DD)	2020-03-10
Name/Print	Justin R. Nifong	Registration Number	59389

This collection of information is required by 37 CFR 1.97 and 1.98. The information is required to obtain or retain a benefit by the public which is to file (and by the USPTO to process) an application. Confidentiality is governed by 35 U.S.C. 122 and 37 CFR 1.14. This collection is estimated to take 1 hour to complete, including gathering, preparing and submitting the completed application form to the USPTO. Time will vary depending upon the individual case. Any comments on the amount of time you require to complete this form and/or suggestions for reducing this burden, should be sent to the Chief Information Officer, U.S. Patent and Trademark Office, U.S. Department of Commerce, P.O. Box 1450, Alexandria, VA 22313-1450. DO NOT SEND FEES OR COMPLETED FORMS TO THIS ADDRESS. **SEND TO: Commissioner for Patents, P.O. Box 1450, Alexandria, VA 22313-1450.**

Privacy Act Statement

The Privacy Act of 1974 (P.L. 93-579) requires that you be given certain information in connection with your submission of the attached form related to a patent application or patent. Accordingly, pursuant to the requirements of the Act, please be advised that: (1) the general authority for the collection of this information is 35 U.S.C. 2(b)(2); (2) furnishing of the information solicited is voluntary; and (3) the principal purpose for which the information is used by the U.S. Patent and Trademark Office is to process and/or examine your submission related to a patent application or patent. If you do not furnish the requested information, the U.S. Patent and Trademark Office may not be able to process and/or examine your submission, which may result in termination of proceedings or abandonment of the application or expiration of the patent.

The information provided by you in this form will be subject to the following routine uses:

1. The information on this form will be treated confidentially to the extent allowed under the Freedom of Information Act (5 U.S.C. 552) and the Privacy Act (5 U.S.C. 552a). Records from this system of records may be disclosed to the Department of Justice to determine whether the Freedom of Information Act requires disclosure of these record s.

2. A record from this system of records may be disclosed, as a routine use, in the course of presenting evidence to a court, magistrate, or administrative tribunal, including disclosures to opposing counsel in the course of settlement negotiations.

3. A record in this system of records may be disclosed, as a routine use, to a Member of Congress submitting a request involving an individual, to whom the record pertains, when the individual has requested assistance from the Member with respect to the subject matter of the record.

4. A record in this system of records may be disclosed, as a routine use, to a contractor of the Agency having need for the information in order to perform a contract. Recipients of information shall be required to comply with the requirements of the Privacy Act of 1974, as amended, pursuant to 5 U.S.C. 552a(m).

5. A record related to an International Application filed under the Patent Cooperation Treaty in this system of records may be disclosed, as a routine use, to the International Bureau of the World Intellectual Property Organization, pursuant to the Patent Cooperation Treaty.

6. A record in this system of records may be disclosed, as a routine use, to another federal agency for purposes of National Security review (35 U.S.C. 181) and for review pursuant to the Atomic Energy Act (42 U.S.C. 218(c)).

7. A record from this system of records may be disclosed, as a routine use, to the Administrator, General Services, or his/her designee, during an inspection of records conducted by GSA as part of that agency's responsibility to recommend improvements in records management practices and programs, under authority of 44 U.S.C. 2904 and 2906. Such disclosure shall be made in accordance with the GSA regulations governing inspection of records for this purpose, and any other relevant (i.e., GSA or Commerce) directive. Such disclosure shall not be used to make determinations about individuals.

8. A record from this system of records may be disclosed, as a routine use, to the public after either publication of the application pursuant to 35 U.S.C. 122(b) or issuance of a patent pursuant to 35 U.S.C. 151. Further, a record may be disclosed, subject to the limitations of 37 CFR 1.14, as a routine use, to the public if the record was filed in an application which became abandoned or in which the proceedings were terminated and which application is referenced by either a published application, an application open to public inspections or an issued patent.

9. A record from this system of records may be disclosed, as a routine use, to a Federal, State, or local law enforcement agency, if the USPTO becomes aware of a violation or potential violation of law or regulation.

Electronic Acknowledgement Receipt

EFS ID:	38824859
Application Number:	16808137
International Application Number:	
Confirmation Number:	1706
Title of Invention:	DEVICE FOR ENDOVASCULAR AORTIC REPAIR AND METHOD OF USING THE SAME
First Named Inventor/Applicant Name:	Ali Shahriari
Customer Number:	115007
Filer:	Justin Robert Nifong/Donna Donovan
Filer Authorized By:	Justin Robert Nifong
Attorney Docket Number:	426/2/9 UTIL
Receipt Date:	10-MAR-2020
Filing Date:	
Time Stamp:	16:48:24
Application Type:	Utility under 35 USC 111(a)

Payment information:

Submitted with Payment	no

File Listing:

Document Number	Document Description	File Name	File Size(Bytes)/ Message Digest	Multi Part /.zip	Pages (if appl.)
1	Information Disclosure Statement (IDS) Form (SB08)	426-2-9UTIL-20200310-IDS.pdf	1040009 fdf9156e0c88e79cbd6938158a6b049495d8dfa0	no	19

Warnings:

Information:					
2	Foreign Reference	FR-1-WO2012147675A1.pdf	3244369 6359d338fd4e7f9531c097ea8437ce4515ad88ac	no	34
Warnings:					
Information:					
3	Foreign Reference	FR-2-WO2004089249A1.pdf	5255110 25ff96ae6886dd9fa70ddcfc31af93e6c77846a5	no	41
Warnings:					
Information:					
4	Foreign Reference	FR-3-WO2013086132A1.pdf	6943422 25f28e2c03912a1183ccc1e0934f9a9bbc0fc4cc	no	63
Warnings:					
Information:					
5	Foreign Reference	FR-4-EP2787925A1.pdf	134780 1f53c4e87d824ec7be4e2b9be007ba8cd2903e30	no	3
Warnings:					
Information:					
6	Foreign Reference	FR-5-DE102014114747A1.pdf	2784661 2e44fed9ad2dc6504ca4a3ab8bacdd34d29faf8f	no	19
Warnings:					
Information:					
7	Foreign Reference	FR-6-JP2011502628A.pdf	2233188 da673f9ab011c3e21be891ec9046598e38313bc5	no	25
Warnings:					
Information:					
8	Foreign Reference	FR-7-JP2011507658A.pdf	3003861 232aebbcc2293960a310ce67a8c732cf246b834b	no	32
Warnings:					
Information:					

9	Foreign Reference	FR-8-WO2011035154A1.pdf	3547652 4898ab6e994bd6b7dd1e620d0b16ff6e6d051337	no	25
Warnings:					
Information:					
10	Foreign Reference	FR-9-WO2006127412A1.pdf	2716674 9d367a3ea2a37795472506ebf1c1938038bc56b0	no	57
Warnings:					
Information:					
11	Foreign Reference	FR-10-WO2010031060A1.pdf	2165058 0c73ddc4722ba8c4bf5bf2306c6796f18d531de7	no	50
Warnings:					
Information:					
12	Foreign Reference	FR-11-WO2010006627A1.pdf	938569 686109f781e3d861b9b9aecfbb08ba54d00bfad2	no	26
Warnings:					
Information:					
13	Foreign Reference	FR-12-WO03003949A2.pdf	3504588 0ec4e24b8f7b20e0cc82e8752b0e0ed6c986a370	no	25
Warnings:					
Information:					
14	Foreign Reference	FR-13-CN102014805.pdf	16891371 4e3a31e21bd1af47e14a1729dbff41e6a1971481	no	121
Warnings:					
Information:					
15	Foreign Reference	FR-14-WO2010105195A2.pdf	6846275 b3a9a02e743bbc8a1c55b9c298c1b35c1da7aef3	no	74
Warnings:					
Information:					

16	Foreign Reference	FR-15-WO0187180A2.pdf	2257154 0ace4cfaf9138494ea41e173dad398248989d91d	no	17
Warnings:					
Information:					
17	Foreign Reference	FR-16-WO2005087117A1.pdf	7452616 3dbe53b41376c20c46df1aac1b2f0cb45ba17bec	no	52
Warnings:					
Information:					
18	Foreign Reference	FR-17-WO2013040663.pdf	1977989 f710e7fc11aa63c4c3f0b70193f3c4e6315db8f2	no	52
Warnings:					
Information:					
19	Foreign Reference	FR-18-96A1.pdf	643822 fae9704b5a03b75bc11d2b0847cbe63f1313e061	no	50
Warnings:					
Information:					
20	Foreign Reference	FR-19-WO2014072501.pdf	1024410 dc01f904cfa228c84c66f0dcc6cb88d1d2b48afb	no	28
Warnings:					
Information:					
21	Foreign Reference	FR-20-DE19857887B4.pdf	573609 8d17b2eaedf0057615e97cdc4c3ae8578ac05788	no	15
Warnings:					
Information:					
22	Foreign Reference	FR-21-DE10065824B4.pdf	364368 625002532c44ca062e04c2d86d55dfe4ee352c8d	no	17
Warnings:					
Information:					

23	Non Patent Literature	NPL-1-Singh.pdf	316812 52a384621cc4d60f78c21621424d6564c69afdf2	no	3
Warnings:					
Information:					
24	Non Patent Literature	NPL-2-ISR-WO.pdf	1634221 b4269222799d46bd89bbd1f59b2a3365f9a1a5d4	no	8
Warnings:					
Information:					
25	Non Patent Literature	NPL-3-Piazza.pdf	2717107 9b6cbfb2053f39b7d57030a307219ab92da60257	no	10
Warnings:					
Information:					
26	Non Patent Literature	NPL-4-Stoeckel.pdf	2175579 78d1a21e3487f98b40c5d3596117bbc1d1517886	no	11
Warnings:					
Information:					
27	Non Patent Literature	NPL-5-IPRP.pdf	524154 8d291f177fb77893ade1813b0540adff1dca1e93	no	7
Warnings:					
Information:					
28	Non Patent Literature	NPL-6-CA-OA.pdf	501195 57f9f3e736c74e227f9b485b780389c49d6547f2	no	3
Warnings:					
Information:					
29	Non Patent Literature	NPL-7-CN-OA.pdf	714957 a311c3ece056101c2ffc471fe6f80a5172f3edc2	no	7
Warnings:					
Information:					

30	Non Patent Literature	NPL-8-EESR-dt-20180723.pdf	295903 431c46d15f2909aa509c21d049102198b9eeba01	no	8
Warnings:					
Information:					
31	Non Patent Literature	NPL-9-JP-OA.pdf	184827 e3cc815933dbcca1d4e6cbb27d90dd591cb7b41f	no	6
Warnings:					
Information:					
32	Non Patent Literature	NPL-10-CA-OA.pdf	382803 9aa4aa7d1f3d9838e6bd135bca1d7c14ac082176	no	4
Warnings:					
Information:					
33	Non Patent Literature	NPL-11-EP-OA.pdf	345024 07393778cf6d1160b966a9fa9a56a0f393ed0eb2	no	4
Warnings:					
Information:					
34	Non Patent Literature	NPL-12-JP-OA.pdf	821973 849ae143de493574a89c49196190b73b0ef8224c	no	9
Warnings:					
Information:					
35	Non Patent Literature	NPL-13-CN-OA.pdf	2191040 377eecfd599b8b5f80b3c268e9ab2bece367d25f	no	15
Warnings:					
Information:					
36	Non Patent Literature	NPL-14-ESSR-dt-20180720.pdf	695242 5a3b0c280b9e1bf4e44ee5c5b9b7f83fd8afe3c0	no	8
Warnings:					
Information:					

37	Non Patent Literature	NPL-15-EESR-dt-20180925.pdf	836874 254d3c688c8d7f6900146de47cdb9819ab481892	no	9
Warnings:					
Information:					
38	Non Patent Literature	NPL-16-NFOA-dt-20140718-13706896.pdf	956411 012315dc20c90d124e1b93cd431e56049aaa1b2b	no	10
Warnings:					
Information:					
39	Non Patent Literature	NPL-17-NFOA-dt-20160212-14569306.pdf	530578 91e00e4a9c5433bb3431ce2df7842c3954d435fd	no	6
Warnings:					
Information:					
40	Non Patent Literature	NPL-18-NFOA-dt-20170922-14614628.pdf	761678 f7fadc1165b440aece8abdce4b535b436793a6f2	no	8
Warnings:					
Information:					
41	Non Patent Literature	NPL-19-NFOA-dt-20170606-14614628.pdf	781532 8e8d20c785f940d55c818060a51ef4954a28bbcf	no	9
Warnings:					
Information:					
42	Non Patent Literature	NPL-20-NFOA-dt-20160325-14614628.pdf	840043 1a1e1e774f1c0fa415bc59f4cfd186d0f349d588	no	9
Warnings:					
Information:					
43	Non Patent Literature	NPL-21-NFOA-dt-20190729-16042286.pdf	465924 fd78fb7f5f04339204 2bb9ae92af4fa6279f6d15	no	5
Warnings:					
Information:					

44	Non Patent Literature	NPL-22-DiBartolomeo.pdf	531338 2ca4451f3f9a441c159598f22e636ba1b5557a76	no	4
Warnings:					
Information:					
45	Non Patent Literature	NPL-23-Invalidity-Search-Report-20200301.pdf	303539 d1abc31e410b1454759e073878452841c8dd984f	no	19
Warnings:					
Information:					
			Total Files Size (in bytes):	95052309	

This Acknowledgement Receipt evidences receipt on the noted date by the USPTO of the indicated documents, characterized by the applicant, and including page counts, where applicable. It serves as evidence of receipt similar to a Post Card, as described in MPEP 503.

<u>New Applications Under 35 U.S.C. 111</u>
If a new application is being filed and the application includes the necessary components for a filing date (see 37 CFR 1.53(b)-(d) and MPEP 506), a Filing Receipt (37 CFR 1.54) will be issued in due course and the date shown on this Acknowledgement Receipt will establish the filing date of the application.
<u>National Stage of an International Application under 35 U.S.C. 371</u>
If a timely submission to enter the national stage of an international application is compliant with the conditions of 35 U.S.C. 371 and other applicable requirements a Form PCT/DO/EO/903 indicating acceptance of the application as a national stage submission under 35 U.S.C. 371 will be issued in addition to the Filing Receipt, in due course.
<u>New International Application Filed with the USPTO as a Receiving Office</u>
If a new international application is being filed and the international application includes the necessary components for an international filing date (see PCT Article 11 and MPEP 1810), a Notification of the International Application Number and of the International Filing Date (Form PCT/RO/105) will be issued in due course, subject to prescriptions concerning national security, and the date shown on this Acknowledgement Receipt will establish the international filing date of the application.

DocCode – SCORE

SCORE Placeholder Sheet for IFW Content

Application Number: 16808137 Document Date: 03/03/2020

The presence of this form in the IFW record indicates that the following document type was received in electronic format on the date identified above. This content is stored in the SCORE database.

Since this was an electronic submission, there is no physical artifact folder, no artifact folder is recorded in PALM, and no paper documents or physical media exist. The TIFF images in the IFW record were created from the original documents that are stored in SCORE.

- Drawing

At the time of document entry (noted above):

- USPTO employees may access SCORE content via DAV or via the SCORE web page.
- External customers may access SCORE content via PAIR using the Supplemental Content tab.

Form Revision Date: March 1, 2019

Doc Code: TRACK1.REQ
Document Description: TrackOne Request

PTO/AIA/424 (04-14)

CERTIFICATION AND REQUEST FOR PRIORITIZED EXAMINATION UNDER 37 CFR 1.102(e) (Page 1 of 1)

First Named Inventor:	Ali Shahriari	Nonprovisional Application Number (if known):	
Title of Invention:	DEVICE FOR ENDOVASCULAR AORTIC REPAIR AND METHOD OF USING THE SAME		

APPLICANT HEREBY CERTIFIES THE FOLLOWING AND REQUESTS PRIORITIZED EXAMINATION FOR THE ABOVE-IDENTIFIED APPLICATION.

1. The processing fee set forth in 37 CFR 1.17(i)(1) and the prioritized examination fee set forth in 37 CFR 1.17(c) have been filed with the request. The publication fee requirement is met because that fee, set forth in 37 CFR 1.18(d), is currently $0. The basic filing fee, search fee, and examination fee are filed with the request or have been already been paid. I understand that any required excess claims fees or application size fee must be paid for the application.

2. I understand that the application may not contain, or be amended to contain, more than four independent claims, more than thirty total claims, or any multiple dependent claims, and that any request for an extension of time will cause an outstanding Track I request to be dismissed.

3. The applicable box is checked below:

I. ☑ Original Application (Track One) - Prioritized Examination under § 1.102(e)(1)

i. (a) The application is an original nonprovisional utility application filed under 35 U.S.C. 111(a). This certification and request is being filed with the utility application via EFS-Web.

---OR---

(b) The application is an original nonprovisional plant application filed under 35 U.S.C. 111(a). This certification and request is being filed with the plant application in paper.

ii. An executed inventor's oath or declaration under 37 CFR 1.63 or 37 CFR 1.64 for each inventor, **or** the application data sheet meeting the conditions specified in 37 CFR 1.53(f)(3)(i) is filed with the application.

II. ☐ Request for Continued Examination - Prioritized Examination under § 1.102(e)(2)

i. A request for continued examination has been filed with, or prior to, this form.
ii. If the application is a utility application, this certification and request is being filed via EFS-Web.
iii. The application is an original nonprovisional utility application filed under 35 U.S.C. 111(a), or is a national stage entry under 35 U.S.C. 371.
iv. This certification and request is being filed prior to the mailing of a first Office action responsive to the request for continued examination.
v. No prior request for continued examination has been granted prioritized examination status under 37 CFR 1.102(e)(2).

Signature /Justin R. Nifong/	Date 2020-03-03
Name (Print/Typed) Justin R. Nifong	Practitioner Registration Number 59389

Note: *This form must be signed in accordance with 37 CFR 1.33. See 37 CFR 1.4(d) for signature requirements and certifications. Submit multiple forms if more than one signature is required.**

☑ *Total of 1 forms are submitted.

Privacy Act Statement

The **Privacy Act of 1974 (P.L. 93-579)** requires that you be given certain information in connection with your submission of the attached form related to a patent application or patent. Accordingly, pursuant to the requirements of the Act, please be advised that: (1) the general authority for the collection of this information is 35 U.S.C. 2(b)(2); (2) furnishing of the information solicited is voluntary; and (3) the principal purpose for which the information is used by the U.S. Patent and Trademark Office is to process and/or examine your submission related to a patent application or patent. If you do not furnish the requested information, the U.S. Patent and Trademark Office may not be able to process and/or examine your submission, which may result in termination of proceedings or abandonment of the application or expiration of the patent.

The information provided by you in this form will be subject to the following routine uses:

1. The information on this form will be treated confidentially to the extent allowed under the Freedom of Information Act (5 U.S.C. 552) and the Privacy Act (5 U.S.C 552a). Records from this system of records may be disclosed to the Department of Justice to determine whether disclosure of these records is required by the Freedom of Information Act.
2. A record from this system of records may be disclosed, as a routine use, in the course of presenting evidence to a court, magistrate, or administrative tribunal, including disclosures to opposing counsel in the course of settlement negotiations.
3. A record in this system of records may be disclosed, as a routine use, to a Member of Congress submitting a request involving an individual, to whom the record pertains, when the individual has requested assistance from the Member with respect to the subject matter of the record.
4. A record in this system of records may be disclosed, as a routine use, to a contractor of the Agency having need for the information in order to perform a contract. Recipients of information shall be required to comply with the requirements of the Privacy Act of 1974, as amended, pursuant to 5 U.S.C. 552a(m).
5. A record related to an International Application filed under the Patent Cooperation Treaty in this system of records may be disclosed, as a routine use, to the International Bureau of the World Intellectual Property Organization, pursuant to the Patent Cooperation Treaty.
6. A record in this system of records may be disclosed, as a routine use, to another federal agency for purposes of National Security review (35 U.S.C. 181) and for review pursuant to the Atomic Energy Act (42 U.S.C. 218(c)).
7. A record from this system of records may be disclosed, as a routine use, to the Administrator, General Services, or his/her designee, during an inspection of records conducted by GSA as part of that agency's responsibility to recommend improvements in records management practices and programs, under authority of 44 U.S.C. 2904 and 2906. Such disclosure shall be made in accordance with the GSA regulations governing inspection of records for this purpose, and any other relevant (*i.e.*, GSA or Commerce) directive. Such disclosure shall not be used to make determinations about individuals.
8. A record from this system of records may be disclosed, as a routine use, to the public after either publication of the application pursuant to 35 U.S.C. 122(b) or issuance of a patent pursuant to 35 U.S.C. 151. Further, a record may be disclosed, subject to the limitations of 37 CFR 1.14, as a routine use, to the public if the record was filed in an application which became abandoned or in which the proceedings were terminated and which application is referenced by either a published application, an application open to public inspection or an issued patent.
9. A record from this system of records may be disclosed, as a routine use, to a Federal, State, or local law enforcement agency, if the USPTO becomes aware of a violation or potential violation of law or regulation.

PTO/AIA/14 (02-18)
Approved for use through 11/30/2020. OMB 0651-0032
U.S. Patent and Trademark Office; U.S. DEPARTMENT OF COMMERCE
Under the Paperwork Reduction Act of 1995, no persons are required to respond to a collection of information unless it contains a valid OMB control number.

Application Data Sheet 37 CFR 1.76	Attorney Docket Number	426/2/9 UTIL
	Application Number	
Title of Invention	DEVICE FOR ENDOVASCULAR AORTIC REPAIR AND METHOD OF USING THE SAME	

The application data sheet is part of the provisional or nonprovisional application for which it is being submitted. The following form contains the bibliographic data arranged in a format specified by the United States Patent and Trademark Office as outlined in 37 CFR 1.76.
This document may be completed electronically and submitted to the Office in electronic format using the Electronic Filing System (EFS) or the document may be printed and included in a paper filed application.

Secrecy Order 37 CFR 5.2:

☐ Portions or all of the application associated with this Application Data Sheet may fall under a Secrecy Order pursuant to 37 CFR 5.2 (Paper filers only. Applications that fall under Secrecy Order may not be filed electronically.)

Inventor Information:

Inventor 1 Remove

Legal Name

Prefix	Given Name	Middle Name	Family Name	Suffix
	Ali		Shahriari	

Residence Information (Select One) ● US Residency Non US Residency Active US Military Service

City	Boca Raton	State/Province	FL	Country of Residence i	US

Mailing Address of Inventor:

Address 1	339 Enfield Street		
Address 2			
City	Boca Raton	State/Province	FL
Postal Code	33487	Country i	US

All Inventors Must Be Listed - Additional Inventor Information blocks may be generated within this form by selecting the **Add** button. Add

Correspondence Information:

Enter either Customer Number or complete the Correspondence Information section below.
For further information see 37 CFR 1.33(a).

☐ **An Address is being provided for the correspondence Information of this application.**

Customer Number	115007		
Email Address	docket@nkpatentlaw.com	Add Email	Remove Email

Application Information:

Title of the Invention	DEVICE FOR ENDOVASCULAR AORTIC REPAIR AND METHOD OF USING THE SAME		
Attorney Docket Number	426/2/9 UTIL	Small Entity Status Claimed	☒
Application Type	Nonprovisional		
Subject Matter	Utility		
Total Number of Drawing Sheets (if any)	19	Suggested Figure for Publication (if any)	1

PTO/AIA/14 (02-18)
Approved for use through 11/30/2020. OMB 0651-0032
U.S. Patent and Trademark Office; U.S. DEPARTMENT OF COMMERCE
Under the Paperwork Reduction Act of 1995, no persons are required to respond to a collection of information unless it contains a valid OMB control number.

Application Data Sheet 37 CFR 1.76	Attorney Docket Number	426/2/9 UTIL
	Application Number	
Title of Invention	DEVICE FOR ENDOVASCULAR AORTIC REPAIR AND METHOD OF USING THE SAME	

Filing By Reference:

Only complete this section when filing an application by reference under 35 U.S.C. 111(c) and 37 CFR 1.57(a). Do not complete this section if application papers including a specification and any drawings are being filed. Any domestic benefit or foreign priority information must be provided in the appropriate section(s) below (i.e., "Domestic Benefit/National Stage Information" and "Foreign Priority Information").

For the purposes of a filing date under 37 CFR 1.53(b), the description and any drawings of the present application are replaced by this reference to the previously filed application, subject to conditions and requirements of 37 CFR 1.57(a).

Application number of the previously filed application	Filing date (YYYY-MM-DD)	Intellectual Property Authority or Country

Publication Information:

☐ Request Early Publication (Fee required at time of Request 37 CFR 1.219)

☐ **Request Not to Publish.** I hereby request that the attached application not be published under 35 U.S.C. 122(b) and certify that the invention disclosed in the attached application **has not and will not** be the subject of an application filed in another country, or under a multilateral international agreement, that requires publication at eighteen months after filing.

Representative Information:

Representative information should be provided for all practitioners having a power of attorney in the application. Providing this information in the Application Data Sheet does not constitute a power of attorney in the application (see 37 CFR 1.32).
Either enter Customer Number or complete the Representative Name section below. If both sections are completed the customer Number will be used for the Representative Information during processing.

Please Select One:	● Customer Number	US Patent Practitioner	◯ Limited Recognition (37 CFR 11.9)
Customer Number	115007		

Domestic Benefit/National Stage Information:

This section allows for the applicant to either claim benefit under 35 U.S.C. 119(e), 120, 121, 365(c), or 386(c) or indicate National Stage entry from a PCT application. Providing benefit claim information in the Application Data Sheet constitutes the specific reference required by 35 U.S.C. 119(e) or 120, and 37 CFR 1.78.
When referring to the current application, please leave the "Application Number" field blank.

Prior Application Status	Pending		Remove
Application Number	Continuity Type	Prior Application Number	Filing or 371(c) Date (YYYY-MM-DD)
	Continuation of	16736879	2020-01-08

Under the Paperwork Reduction Act of 1995, no persons are required to respond to a collection of information unless it contains a valid OMB control number.

Application Data Sheet 37 CFR 1.76	Attorney Docket Number	426/2/9 UTIL
	Application Number	
Title of Invention	DEVICE FOR ENDOVASCULAR AORTIC REPAIR AND METHOD OF USING THE SAME	

Prior Application Status	Patented				Remove
Application Number	Continuity Type	Prior Application Number	Filing Date (YYYY-MM-DD)	Patent Number	Issue Date (YYYY-MM-DD)
16736879	Continuation of	16042286	2018-07-23	10555823	2020-02-11
Prior Application Status	Patented				Remove
Application Number	Continuity Type	Prior Application Number	Filing Date (YYYY-MM-DD)	Patent Number	Issue Date (YYYY-MM-DD)
16042286	Continuation of	14614628	2015-02-05	10028848	2018-07-24
Prior Application Status	Patented				Remove
Application Number	Continuity Type	Prior Application Number	Filing Date (YYYY-MM-DD)	Patent Number	Issue Date (YYYY-MM-DD)
14614628	Continuation of	14569306	2014-12-12	9339399	2016-05-17
Prior Application Status	Patented				Remove
Application Number	Continuity Type	Prior Application Number	Filing Date (YYYY-MM-DD)	Patent Number	Issue Date (YYYY-MM-DD)
14569306	Division of	13706896	2012-12-06	8940040	2015-01-27
Prior Application Status	Expired				Remove
Application Number	Continuity Type	Prior Application Number	Filing or 371(c) Date (YYYY-MM-DD)		
13706896	Claims benefit of provisional	61723446	2012-11-07		
Prior Application Status	Expired				Remove
Application Number	Continuity Type	Prior Application Number	Filing or 371(c) Date (YYYY-MM-DD)		
13706896	Claims benefit of provisional	61567458	2011-12-06		
Additional Domestic Benefit/National Stage Data may be generated within this form by selecting the **Add** button.					Add

Foreign Priority Information:

This section allows for the applicant to claim priority to a foreign application. Providing this information in the application data sheet constitutes the claim for priority as required by 35 U.S.C. 119(b) and 37 CFR 1.55. When priority is claimed to a foreign application that is eligible for retrieval under the priority document exchange program (PDX)[i] the information will be used by the Office to automatically attempt retrieval pursuant to 37 CFR 1.55(i)(1) and (2). Under the PDX program, applicant bears the ultimate responsibility for ensuring that a copy of the foreign application is received by the Office from the participating foreign intellectual property office, or a certified copy of the foreign priority application is filed, within the time period specified in 37 CFR 1.55(g)(1).

			Remove
Application Number	Country[i]	Filing Date (YYYY-MM-DD)	Access Code[i] (if applicable)

Application Data Sheet 37 CFR 1.76	Attorney Docket Number	426/2/9 UTIL
	Application Number	
Title of Invention	DEVICE FOR ENDOVASCULAR AORTIC REPAIR AND METHOD OF USING THE SAME	

Additional Foreign Priority Data may be generated within this form by selecting the **Add** button. Add

Statement under 37 CFR 1.55 or 1.78 for AIA (First Inventor to File) Transition Applications

☐ This application (1) claims priority to or the benefit of an application filed before March 16, 2013 and (2) also contains, or contained at any time, a claim to a claimed invention that has an effective filing date on or after March 16, 2013.
NOTE: By providing this statement under 37 CFR 1.55 or 1.78, this application, with a filing date on or after March 16, 2013, will be examined under the first inventor to file provisions of the AIA.

Application Data Sheet 37 CFR 1.76	Attorney Docket Number	426/2/9 UTIL
	Application Number	
Title of Invention	DEVICE FOR ENDOVASCULAR AORTIC REPAIR AND METHOD OF USING THE SAME	

Authorization or Opt-Out of Authorization to Permit Access:

When this Application Data Sheet is properly signed and filed with the application, applicant has provided written authority to permit a participating foreign intellectual property (IP) office access to the instant application-as-filed (see paragraph A in subsection 1 below) and the European Patent Office (EPO) access to any search results from the instant application (see paragraph B in subsection 1 below).

Should applicant choose not to provide an authorization identified in subsection 1 below, applicant **must opt-out** of the authorization by checking the corresponding box A or B or both in subsection 2 below.

NOTE: This section of the Application Data Sheet is **ONLY** reviewed and processed with the **INITIAL** filing of an application. After the initial filing of an application, an Application Data Sheet cannot be used to provide or rescind authorization for access by a foreign IP office(s). Instead, Form PTO/SB/39 or PTO/SB/69 must be used as appropriate.

1. Authorization to Permit Access by a Foreign Intellectual Property Office(s)

A. Priority Document Exchange (PDX) - Unless box A in subsection 2 (opt-out of authorization) is checked, the undersigned hereby **grants the USPTO authority** to provide the European Patent Office (EPO), the Japan Patent Office (JPO), the Korean Intellectual Property Office (KIPO), the State Intellectual Property Office of the People's Republic of China (SIPO), the World Intellectual Property Organization (WIPO), and any other foreign intellectual property office participating with the USPTO in a bilateral or multilateral priority document exchange agreement in which a foreign application claiming priority to the instant patent application is filed, access to: (1) the instant patent application-as-filed and its related bibliographic data, (2) any foreign or domestic application to which priority or benefit is claimed by the instant application and its related bibliographic data, and (3) the date of filing of this Authorization. See 37 CFR 1.14(h)(1).

B. Search Results from U.S. Application to EPO - Unless box B in subsection 2 (opt-out of authorization) is checked, the undersigned hereby **grants the USPTO authority** to provide the EPO access to the bibliographic data and search results from the instant patent application when a European patent application claiming priority to the instant patent application is filed. See 37 CFR 1.14(h)(2).

The applicant is reminded that the EPO's Rule 141(1) EPC (European Patent Convention) requires applicants to submit a copy of search results from the instant application without delay in a European patent application that claims priority to the instant application.

2. Opt-Out of Authorizations to Permit Access by a Foreign Intellectual Property Office(s)

☐ A. Applicant **DOES NOT** authorize the USPTO to permit a participating foreign IP office access to the instant application-as-filed. If this box is checked, the USPTO will not be providing a participating foreign IP office with any documents and information identified in subsection 1A above.

☐ B. Applicant **DOES NOT** authorize the USPTO to transmit to the EPO any search results from the instant patent application. If this box is checked, the USPTO will not be providing the EPO with search results from the instant application.

NOTE: Once the application has published or is otherwise publicly available, the USPTO may provide access to the application in accordance with 37 CFR 1.14.

PTO/AIA/14 (02-18)
Approved for use through 11/30/2020. OMB 0651-0032
U.S. Patent and Trademark Office; U.S. DEPARTMENT OF COMMERCE
Under the Paperwork Reduction Act of 1995, no persons are required to respond to a collection of information unless it contains a valid OMB control number.

Application Data Sheet 37 CFR 1.76	Attorney Docket Number	426/2/9 UTIL
	Application Number	
Title of Invention	DEVICE FOR ENDOVASCULAR AORTIC REPAIR AND METHOD OF USING THE SAME	

Applicant Information:

Providing assignment information in this section does not substitute for compliance with any requirement of part 3 of Title 37 of CFR to have an assignment recorded by the Office.

Applicant 1 Remove

If the applicant is the inventor (or the remaining joint inventor or inventors under 37 CFR 1.45), this section should not be completed. The information to be provided in this section is the name and address of the legal representative who is the applicant under 37 CFR 1.43; or the name and address of the assignee, person to whom the inventor is under an obligation to assign the invention, or person who otherwise shows sufficient proprietary interest in the matter who is the applicant under 37 CFR 1.46. If the applicant is an applicant under 37 CFR 1.46 (assignee, person to whom the inventor is obligated to assign, or person who otherwise shows sufficient proprietary interest) together with one or more joint inventors, then the joint inventor or inventors who are also the applicant should be identified in this section. Clear

● Assignee	Legal Representative under 35 U.S.C. 117	Joint Inventor
Person to whom the inventor is obligated to assign.	Person who shows sufficient proprietary interest	

If applicant is the legal representative, indicate the authority to file the patent application, the inventor is:

Name of the Deceased or Legally Incapacitated Inventor:

If the Applicant is an Organization check here. ☒

Organization Name	Aortic Innovations, LLC		
Mailing Address Information For Applicant:			
Address 1	839 Enfield Street		
Address 2			
City	Boca Raton	**State/Province**	FL
Country	US	Postal Code	33487
Phone Number		Fax Number	
Email Address			

Additional Applicant Data may be generated within this form by selecting the Add button. Add

Assignee Information including Non-Applicant Assignee Information:

Providing assignment information in this section does not substitute for compliance with any requirement of part 3 of Title 37 of CFR to have an assignment recorded by the Office.

Under the Paperwork Reduction Act of 1995, no persons are required to respond to a collection of information unless it contains a valid OMB control number.

Application Data Sheet 37 CFR 1.76	Attorney Docket Number	426/2/9 UTIL
	Application Number	
Title of Invention	DEVICE FOR ENDOVASCULAR AORTIC REPAIR AND METHOD OF USING THE SAME	

Assignee 1

Complete this section if assignee information, including non-applicant assignee information, is desired to be included on the patent application publication. An assignee-applicant identified in the "Applicant Information" section will appear on the patent application publication as an applicant. For an assignee-applicant, complete this section only if identification as an assignee is also desired on the patent application publication.

Remove

If the Assignee or Non-Applicant Assignee is an Organization check here. ☐

Prefix	**Given Name**	Middle Name	**Family Name**	Suffix

Mailing Address Information For Assignee including Non-Applicant Assignee:

Address 1			
Address 2			
City		**State/Province**	
Country i		Postal Code	
Phone Number		Fax Number	
Email Address			

Additional Assignee or Non-Applicant Assignee Data may be generated within this form by selecting the Add button. Add

Signature:

Remove

NOTE: This Application Data Sheet must be signed in accordance with 37 CFR 1.33(b). **However, if this Application Data Sheet is submitted with the INITIAL filing of the application and either box A or B is not checked in subsection 2 of the "Authorization or Opt-Out of Authorization to Permit Access" section, then this form must also be signed in accordance with 37 CFR 1.14(c).**

This Application Data Sheet **must** be signed by a patent practitioner if one or more of the applicants is a **juristic entity** (e.g., corporation or association). If the applicant is two or more joint inventors, this form must be signed by a patent practitioner, **all** joint inventors who are the applicant, or one or more joint inventor-applicants who have been given power of attorney (e.g., see USPTO Form PTO/AIA/81) on behalf of **all** joint inventor-applicants.

See 37 CFR 1.4(d) for the manner of making signatures and certifications.

Signature	/Justin R. Nifong/			Date (YYYY-MM-DD)	2020-03-03
First Name	Justin R.	Last Name	Nifong	Registration Number	59389

Additional Signature may be generated within this form by selecting the Add button. Add

Application Data Sheet 37 CFR 1.76	Attorney Docket Number	426/2/9 UTIL
	Application Number	
Title of Invention	DEVICE FOR ENDOVASCULAR AORTIC REPAIR AND METHOD OF USING THE SAME	

This collection of information is required by 37 CFR 1.76. The information is required to obtain or retain a benefit by the public which is to file (and by the USPTO to process) an application. Confidentiality is governed by 35 U.S.C. 122 and 37 CFR 1.14. This collection is estimated to take 23 minutes to complete, including gathering, preparing, and submitting the completed application data sheet form to the USPTO. Time will vary depending upon the individual case. Any comments on the amount of time you require to complete this form and/or suggestions for reducing this burden, should be sent to the Chief Information Officer, U.S. Patent and Trademark Office, U.S. Department of Commerce, P.O. Box 1450, Alexandria, VA 22313-1450. DO NOT SEND FEES OR COMPLETED FORMS TO THIS ADDRESS. **SEND TO: Commissioner for Patents, P.O. Box 1450, Alexandria, VA 22313-1450.**

Privacy Act Statement

The Privacy Act of 1974 (P.L. 93-579) requires that you be given certain information in connection with your submission of the attached form related to a patent application or patent. Accordingly, pursuant to the requirements of the Act, please be advised that: (1) the general authority for the collection of this information is 35 U.S.C. 2(b)(2); (2) furnishing of the information solicited is voluntary; and (3) the principal purpose for which the information is used by the U.S. Patent and Trademark Office is to process and/or examine your submission related to a patent application or patent. If you do not furnish the requested information, the U.S. Patent and Trademark Office may not be able to process and/or examine your submission, which may result in termination of proceedings or abandonment of the application or expiration of the patent.

The information provided by you in this form will be subject to the following routine uses:

1 The information on this form will be treated confidentially to the extent allowed under the Freedom of Information Act (5 U.S.C. 552) and the Privacy Act (5 U.S.C. 552a). Records from this system of records may be disclosed to the Department of Justice to determine whether the Freedom of Information Act requires disclosure of these records.

2. A record from this system of records may be disclosed, as a routine use, in the course of presenting evidence to a court, magistrate, or administrative tribunal, including disclosures to opposing counsel in the course of settlement negotiations.

3 A record in this system of records may be disclosed, as a routine use, to a Member of Congress submitting a request involving an individual, to whom the record pertains, when the individual has requested assistance from the Member with respect to the subject matter of the record.

4. A record in this system of records may be disclosed, as a routine use, to a contractor of the Agency having need for the information in order to perform a contract. Recipients of information shall be required to comply with the requirements of the Privacy Act of 1974, as amended, pursuant to 5 U.S.C. 552a(m).

5. A record related to an International Application filed under the Patent Cooperation Treaty in this system of records may be disclosed, as a routine use, to the International Bureau of the World Intellectual Property Organization, pursuant to the Patent CooperationTreaty.

6. A record in this system of records may be disclosed, as a routine use, to another federal agency for purposes of National Security review (35 U.S.C. 181) and for review pursuant to the Atomic Energy Act (42 U.S.C. 218(c)).

7. A record from this system of records may be disclosed, as a routine use, to the Administrator, General Services, or his/her designee, during an inspection of records conducted by GSA as part of that agency's responsibility to recommend improvements in records management practices and programs, under authority of 44 U.S.C. 2904 and 2906. Such disclosure shall be made in accordance with the GSA regulations governing inspection of records for this purpose, and any other relevant (i.e., GSA or Commerce) directive. Such disclosure shall not be used to make determinations about individuals.

8. A record from this system of records may be disclosed, as a routine use, to the public after either publication of the application pursuant to 35 U.S.C. 122(b) or issuance of a patent pursuant to 35 U.S.C. 151. Further, a record may be disclosed, subject to the limitations of 37 CFR 1.14, as a routine use, to the public if the record was filed in an application which became abandoned or in which the proceedings were terminated and which application is referenced by either a published application, an application open to public inspections or an issued patent.

9. A record from this system of records may be disclosed, as a routine use, to a Federal, State, or local law enforcement agency, if the USPTO becomes aware of a violation or potential violation of law or regulation.

Attorney Docket No.: 426/2/9 UTIL

DEVICE FOR ENDOVASCULAR AORTIC REPAIR AND METHOD OF USING THE SAME

[0001] This application is a continuation of U.S. Patent Application No. 16/736,879 entitled "DEVICE FOR ENDOVASCULAR AORTIC REPAIR AND METHOD OF USING THE SAME", which was filed on January 8, 2020, which is a continuation of U.S. Patent Application No. 16/042,286 entitled "DEVICE FOR ENDOVASCULAR AORTIC REPAIR AND METHOD OF USING THE SAME", which was filed on July 23, 2018 and issued as U.S. Patent No. 10,555,823 on February 11, 2020, which is a continuation of U.S. Patent Application No. 14/614,628 entitled "Device for Endovascular Aortic Repair and Method of Using the Same", which was filed on February 5, 2015 and issued as U.S. Patent No. 10,028,848 on July 24, 2018, which is a continuation of U.S. Patent Application No. 14/569,306 entitled "Device for Endovascular Aortic Repair and Method of Using the Same", which was filed on December 12, 2014 and issued as U.S. Patent No. 9,339,399 on May 17, 2016, which is a divisional of U.S. Patent Application No. 13/706,896 entitled "Device for Endovascular Aortic Repair and Method of Using the Same", which was filed on December 6, 2012 and issued as U.S. Patent No. 8,940,040 on January 27, 2015, which claims the benefit under 35 U.S.C. § 119 to U.S. Provisional Application Serial No. 61/567,458 entitled "Transcathetar Aortic Valve for Endovascular Aortic Repair", which was filed on December 6, 2011. Application No. 13/706,896 also claims priority under § 119 to U.S. Provisional Application Serial No. 61/723,446 entitled "Transcathetar Aortic Valve for Endovascular Aortic Repair", which was filed on November 7, 2012. Each of the applications referenced herein are incorporated by reference in their entirety.

TECHNICAL FIELD

[0002] The present disclosure relates to a device and method of using same for endovascular aortic repair, including repair of aortic valve disease, aortic stenosis, ascending aortic aneurysms, aortic insufficiency, aortic regurgitation, ascending aneurysm, bicuspid valve disease, and/or Type A dissections.

BACKGROUND

[0003] The normal aortic root and the ascending aorta are composed of the aortic annulus, the sinuses of Valsalva, the sinutubular junction, and the tubular portion. The challenge facing practitioners of endovascular repair of ascending aortic aneurysms is that there is a very short proximal landing zone at the level of the sinutubular junction, there is variable coronary anatomy from patient to patient, and, in many cases, there is involvement of the aortic valve with either stenosis or insufficiency. Generally speaking, and as discussed in the article SURGERY INSIGHT: THE DILATED ASCENDING AORTA — INDICATIONS FOR SURGICAL INTERVENTION, by James E. Davies and Thralf M. Sundt published in Nature Clinical Practice Cardiovascular Medicine (2007), the contents of which are incorporated herein by reference in its entirety, there are three basic types of involvement of the ascending aorta, designated as Type A, B, or C. These will be discussed in further detail below and are shown in FIGS. 1A-1C, which have been reproduced from the referenced article.

[0004] Type A aneurysms are most commonly found in younger patients and patients with connective tissue disorders such as Marfan syndrome. The anatomical characteristics of Type A aneurysms are dilatation of the sinuses of Valsalva with or without dilatation of the aortic annulus. The sinutubular junction is most often dilated. The valve could be normal, stenotic or insufficient. An example of a Type A aneurysm is shown in FIG. 1A.

[0005] The anatomical characteristics of Type B aneurysms are dilatation of the tubular portion. Initially the sinutubular junction may be normal or mildly dilated, however as the aneurysm grows, it stretches the sinutubular junction and may eventually lead to aortic insufficiency. The valve could be normal, stenotic or insufficient. The bulk of the aneurysm is at the level of the tubular aorta. An example of a Type B aneurysm is shown in FIG. lB.

[0006] The anatomical characteristics of Type C aneurysms are dilatation of the sinuses of Valsalva, sinutubular junction and the tubular portion of the aorta. The valve could be normal, stenotic or insufficient. Type B and C aneurysms are most commonly found in an older group of patients. An example of a Type C aneurysm is shown in FIG. 1C.

[0007] There are devices clinically used for endovascular repair of ascending aortic aneurysms. Although transcatheter valves are a clinical reality, none in clinical use have been designed with the purpose of endovascular repair of multiple types of ascending aortic aneurysms. Indeed, a device is needed that can treat different anatomical variations of ascending aortic aneurysms, create effective proximal and distal seal zones within the aorta, and have a durable valve component, but that also allows for future valve re-interventions. A device is also needed that would allow for treatment of different coronary anatomical variations among the patient population, allow future coronary re-intervention, but that also avoids coronary compression, and enables treatment of possible paravalvular leaks.

SUMMARY

[0008] According to one aspect of the disclosure, an endograft device for endovascular repair of ascending aortic aneurysms is disclosed. The endograft device includes a first prosthetic component that has a proximal frame and a distal frame that is secured to the proximal frame and extends to a distal end of the first prosthetic component. The endograft device also includes at least

one conduit that is secured to the first prosthetic component and that is positioned adjacent to the proximal frame, and a second prosthetic component that is secured to a proximal end of the first prosthetic component. The second prosthetic component includes a balloon-expandable frame extending distally from a proximal end of the second prosthetic component and a self-expanding frame that is connected to the balloon-expandable frame and extends to a distal end of the second prosthetic component. The endograft device also includes a valve element that is secured to the balloon-expandable frame at the proximal end of the second prosthetic component.

[0009] In some embodiments, the self-expanding frame may have an hourglass shape. In some embodiments, the self-expanding frame may include a first section that tapers inwardly between a proximal end and a distal end. The endograft device may also include a second section having a proximal end that is secured to the distal end of the first section. The second section may taper outwardly between the proximal end of the second section and a distal end of the second section. Additionally, in some embodiments, the proximal end of the first section may be connected to a distal end of the balloon-expandable frame.

[0010] In some embodiments, the self-expanding frame may include a third section that extends proximally from the proximal end of the first section. The third section may have a passageway defined therein, and the balloon-expandable frame may be positioned in the passageway of the third section of the self-expanding frame. In some embodiments, the balloon-expandable frame may be expandable between an unexpanded position in which an outer surface of the balloon-expandable frame is spaced apart from an inner surface of the self-expanding frame and an expanded position in which the outer surface of the balloon-expandable frame is engaged with the inner surface of the self-expanding frame.

[0011] In some embodiments, a plurality of fibers may be attached to the third section of the self-expanding frame. When the balloon-expandable frame is in the expanded position, the outer surface of the balloon-expandable frame may be engaged with the plurality of fibers.

[0012] In some embodiments, the proximal frame of the first prosthetic component may have a passageway defined therein, and the distal end of the second prosthetic component may be positioned in the passageway of the first prosthetic component.

[0013] In some embodiments, the conduit may include a pair of conduits positioned on opposite sides of the first prosthetic component. Additionally, in some embodiments, the conduit may have a proximal opening that is positioned adjacent to a proximal end of the first prosthetic component.

[0014] In some embodiments, the proximal frame may include a first section secured to the distal end of the second prosthetic component, and a second section connected to the first section. The second section may taper outward between a proximal end connected to the first section and a distal end. The conduit may have a distal opening defined in the second section of the proximal frame.

[0015] Additionally, in some embodiments, the endograft device may include a stent having a distal end positioned in the proximal opening of the at least one conduit and a proximal end configured to be positioned in a coronary artery.

[0016] In some embodiments, an outer surface of the second prosthetic component and an outer surface of the proximal frame of the first prosthetic component may be covered such that fluid is prevented from passing therethrough. Additionally, an outer surface of the distal frame of the first prosthetic component may be uncovered such that is fluid permitted to pass therethrough.

[0017] According to another aspect, a transcatheter valve is disclosed. The transcatheter valve includes a frame component having a balloon-expandable frame extending distally from a proximal end of the frame component and a self-expanding frame secured to the balloon-expandable frame. The self-expanding frame includes a first section that tapers inwardly between a proximal end and a distal end, and a second section that tapers outwardly between a proximal end secured to the distal end of the first section and a distal end. A valve element is positioned in the balloon-expandable frame at the proximal end of the frame component.

[0018] In some embodiments, the frame component may be a dual-frame component. The self-expanding frame may be an outer frame of the dual-frame component and may have a passageway defined therein. The balloon-expandable frame may be an inner frame of the dual-frame component that is positioned in the passageway defined in the self-expanding frame. Additionally, the balloon-expandable frame may be expandable between an unexpanded position in which an outer surface of the balloon-expandable frame is spaced apart from an inner surface of the self-expanding frame and an expanded position in which the outer surface of the balloon-expandable frame is engaged with the inner surface of the self-expanding frame.

[0019] In some embodiments, a plurality of fibers may be attached to the self-expanding frame. When the balloon-expandable frame is in the expanded position, the outer surface of the balloon-expandable frame may be engaged with the plurality of fibers. Additionally, in some embodiments, an outer surface of the first section of the self-expanding frame may be uncovered such that fluid is permitted to pass therethrough and an outer surface of the second section of the self-expanding frame may be covered such that fluid is prevented from passing therethrough.

[0020] In some embodiments, the self-expanding frame may include an elongated section extending distally from the second section. The elongated section may have a length that is greater

than a combined length of the first section and the second section. Additionally, in some embodiments, the self-expanding frame may be covered with at least one of a collagen and hydrogel. In some embodiments, the valve element may be one of a bicuspid valve and a tricuspid valve.

[0021] According to another aspect, a method of repairing a patient's aorta is disclosed. The method includes introducing a first prosthetic component into the patient's aorta such that a proximal frame of the first prosthetic component is positioned in the ascending aorta and a distal frame of the first prosthetic component is positioned in the aortic arch of the patient's aorta, advancing a covered stent through a conduit defined in the first prosthetic component into a coronary artery of the patient's aorta, securing a second prosthetic component to a proximal end of the first prosthetic component in the patient's aorta, and expanding a proximal section of the second prosthetic component into engagement with the aortic annulus of the patient's aorta such that a valve secured to the proximal section is positioned in the aortic annulus proximal to the coronary arteries.

[0022] In some embodiments, expanding the proximal section of the second prosthetic component may include operating a balloon-expandable frame. Additionally, in some embodiments, expanding the proximal section of the second prosthetic component may include permitting a self-expanding frame to expand into engagement with the aortic annulus, and operating the balloon-expandable frame may include advancing an outer surface of the balloon-expandable frame into engagement with an inner surface of the self-expanding frame after the self-expanding frame is engaged with the aortic annulus.

[0023] In some embodiments, operating the balloon-expandable frame may include advancing an outer surface of the balloon-expandable frame into engagement with the aortic annulus.

[0024] In some embodiments, an outer surface of the second prosthetic component and an outer surface of the proximal frame of the first prosthetic component may be covered such that fluid is prevented from passing therethrough. Additionally, an outer surface of the distal frame of the first prosthetic component may be uncovered such that is permitted to pass therethrough.

[0025] In some embodiments, introducing the first prosthetic component into the patient's aorta and advancing the covered stent through the conduit defined in the first prosthetic component into the coronary artery of the patient's aorta may be performed during a first surgical procedure. In some embodiments, securing the second prosthetic component to the proximal end of the first prosthetic component and expanding the proximal section of the second prosthetic component into engagement with the aortic annulus of the patient's aorta may be performed during a second surgical procedure different from the first surgical procedure.

[0026] In some embodiments, the method may also include introducing the second prosthetic component into the ascending aorta prior to introducing the first prosthetic component.

BRIEF DESCRIPTION OF THE DRAWINGS

[0027] Embodiments of the present disclosure will now be described by way of example in greater detail with reference to the attached figures, in which:

[0028] FIG. 1 is an illustrative aorta;

[0029] FIG. 1A is an example of a Type A aneurysm;

[0030] FIG. 1B is an example of a Type B aneurysm;

[0031] FIG. 1C is an example of a Type C aneurysm;

[0032] FIG. 2 is partial cutaway view of an aorta with an embodiment of an endovascular prosthetic device implanted therein;

[0033] FIG. 3 is an elevation view of a proximal prosthetic component of the endovascular prosthetic device of FIG. 2;

[0034] FIG. 4 is an elevation view of a distal prosthetic component of the endovascular prosthetic device of FIG. 2;

[0035] FIG. 5 is a cross sectional view of the distal prosthetic component of FIG. 4 taken along the line 5-5 in FIG. 4;

[0036] FIG. 6 is a partial cutaway view of the aorta with the distal prosthetic component of FIG. 3 implanted therein;

[0037] FIG. 7 is a view similar to FIG. 6 showing stents extending from the distal prosthetic component;

[0038] FIG. 8 is an elevation view of another embodiment of a proximal prosthetic component of the endovascular prosthetic device of FIG. 2;

[0039] FIG. 9 is an elevation view of a self-expanding outer frame of the proximal prosthetic component of FIG. 8;

[0040] FIG. 10 is an elevation view of a balloon-expandable inner frame of the proximal prosthetic component of FIG. 8;

[0041] FIG. 11 is a perspective view a proximal end of the proximal prosthetic component of FIG. 8;

[0042] FIG. 12 is a cross-sectional elevation view of the proximal prosthetic component of FIG. 8 taken along the line 12-12 in FIG. 11;

[0043] FIG. 13 is a plan view of the proximal prosthetic component of FIG. 8 showing the inner frame in an unexpanded position;

[0044] FIG. 14 is a plan view similar to FIG. 13 showing the inner frame in an expanded position;

[0045] FIG. 15 is a partial cutaway view of the aorta with the distal prosthetic component of FIG. 4 secured to the proximal prosthetic component of FIG. 8;

[0046] FIG. 16 is a view similar to FIG. 15 showing the inner frame in an expanded position;

[0047] FIG. 17 is an embodiment of a transcatheter valve device similar to the proximal prosthetic component of FIG. 3;

[0048] FIGS. 18-19 are partial cutaway views of the aorta with the transcatheter valve of FIG. 17 implanted therein;

[0049] FIG. 20 is another embodiment of a transcatheter valve device similar to the proximal prosthetic component of FIG. 8; and

[0050] FIGS. 21-22 are partial cutaway views of the aorta with the transcatheter valve of FIG. 20 implanted therein.

DETAILED DESCRIPTION OF THE DRAWINGS

[0051] While the concepts of the present disclosure are susceptible to various modifications and alternative forms, specific exemplary embodiments thereof have been illustrated by way of example in the drawings and will herein be described in detail. It should be understood, however, that there is no intent to limit the concepts of the present disclosure to the particular forms disclosed, but on the contrary, the intention is to cover all modifications, equivalents, and alternatives falling within the spirit and scope of the invention as defined by the appended claims.

[0052] Terms representing anatomical references, such as anterior, posterior, medial, lateral, superior, inferior, distal, proximal, etcetera, may be used throughout the specification in reference to the orthopaedic implants and surgical instruments described herein as well as in reference to the patient's natural anatomy. Such terms have well-understood meanings in both the study of anatomy and the field of orthopaedics. Use of such anatomical reference terms in the written description and claims is intended to be consistent with their well-understood meanings unless noted otherwise. For example, the term "proximal" refers to the direction that is generally closest to the heart, and the term "distal" refers to the direction that is generally furthest from the heart.

[0053] Referring to FIGS. 2-16, exemplary designs of an endovascular prosthetic device or endograft device 10 (hereinafter device 10) are shown. The device 10 is intended for the treatment of most ascending aortic aneurysms and is configured to treat any type of ascending aneurysm regardless of involvement of the aortic valve and the sinuses of Valsalva. As described in greater detail below, the device 10 permits future coronary and aortic valve interventions as well as extension of a fenestrated/ branch graft into the aortic arch. Part of the device 10 may also be modified and used as a transcatheter valve, as described in greater detail below in regard to FIGS. 17-22. Such a valve may be introduced transfemorally or through the subclavian artery or the apex of the heart.

[0054] Referring now to FIGS. 2-7, the device 10 includes a proximal component 12 that is attached to a distal component 14. As shown in FIG. 2, the distal component 14 may be secured to the proximal component 12 when implanted into a patient's aorta 16. When implanted, the proximal component 12 is positioned in the patient's ascending aorta 18, while the distal component 14 extends distally into the arch 20 of the patient's aorta 16. The distal component 14

includes a pair of "Endo-cabrol conduits" or conduits 22, and each conduit 22 is sized to receive a catheter or stent 24 for coronary blood flow, as described in greater detail below. The device 10 is configured to treat all ascending aneurysms with or without dilated sinutubular junctions and aortic valve disease.

[0055] As shown in FIG. 3, the proximal component 12 includes a frame 26 that extends from a proximal end 28 to a distal end 30. The frame 26 is attached to a valve 32 (shown in phantom), which is positioned at the proximal end 28 of the component 12. In the illustrative embodiment, the valve 32 is configured as a bicuspid valve. It should be appreciated that in other embodiments the valve 32 may be tricuspid or quadracuspid. The valve 32 may be constructed from treated bovine pericardium or other suitable proven biological or synthetic material. When the proximal component 12 is implanted into the patient's aorta 16, the valve 32 replaces the aortic valve and permits fluid (i.e., blood) to selectively pass from the heart and into a passageway 36 extending through the proximal component 12.

[0056] The valve 32 is housed in a balloon-expandable frame 34 of the frame 26. As shown in FIG. 3, the balloon-expandable frame 34 is embodied as a balloon-expandable stent 38 that extends distally from the proximal end 28 of the component 12 and has a length 40 of approximately 15 mm. In other embodiments, the stent 38 may be longer or shorter depending on, for example, the patient's anatomy. The stent 38 is tubular and is constructed of a metallic material, such as, nitinol, stainless steel, or other implant grade metallic material, in an open-cell configuration. It should be appreciated that in other embodiments the stent 38 may be formed from a polymeric material and may be formed in, for example, a Z-stent configuration. In the illustrative embodiment, the outer surface 42 of the stent 38 is covered with low-profile polyester, ePTFE, or other nonporous covering material 44 that prevents fluid from passing through the outer surface

42. However, it should be appreciated that the stent 38 may be covered with standard polyester or other nonporous materials.

[0057] As shown in FIG. 3, the stent 38 of the balloon-expandable frame 34 has a diameter 46. As described in greater detail below, the balloon-expandable frame 34 is expandable during implantation from an unexpanded diameter (not shown) to the expanded diameter 46. In the illustrative embodiment, the expanded diameter 46 is equal to approximately 26 mm when the frame 34 is expanded. In other embodiments, the expanded diameter may be greater than or less than 26 mm depending on, for example, the patient's anatomy. Examples of balloon-expandable stents are described in U.S. Patent No. 5,102,417 entitled "Expandable Intraluminal Graft, and Method and Apparatus for Implanting an Expandable Intraluminal Graft" by Julio C. Palmaz and U.S. Patent No. 6,582,462 entitled "Valve Prosthesis for Implantation in the Body and a Catheter for Implanting Such Valve Prosthesis" by Henning Rud Andersen et al., which are expressly incorporated herein by reference. In the illustrative embodiment, the diameter 46 is oversized relative to the diameter of the aortic annulus 210 (see FIG. 1) such that an interference fit is created between the stent 38 and the annulus 210 when the component 12 is implanted and the stent 38 is expanded, as described in greater detail below.

[0058] The balloon-expandable frame 34 is attached to a self-expanding frame 50. In the illustrative embodiment, the distal end 52 of the balloon-expandable frame 34 is secured to the proximal end 54 of the frame 50 by stitching or sewing the frames 34, 50 together, thereby forming the frame 26 of the component 12. It should be appreciated that in other embodiments the frames 34, 50 may be secured together via welding or other fasteners. The frames 34, 50 may also be formed as a single, monolithic frame.

[0059] As shown in FIG. 3, the self-expanding frame 50 has a generally hourglass shape and is formed from a metallic material, such as, nitinol, stainless steel, or other implant grade metallic material. It should be appreciated that in other embodiments the frame 50 may be formed from a polymeric material. The frame 50 includes an inwardly tapered proximal section 60, an outwardly tapered middle section 62, and an elongated distal section 64. The section 60 includes the proximal end 54 of the frame 50 and has a distal end 66 connected to the proximal end 68 of the outwardly tapered middle section 62. The section 60 tapers inwardly between the ends 54, 66 from approximately 26 mm at the end 54 to approximately 22 mm at the end 66. In the illustrative embodiment, the proximal section 60 has a length 70 of approximately 10 mm. It should be appreciated that in other embodiments the dimensions of the section 60 may vary depending on, for example, the patient's anatomy.

[0060] The outwardly tapered middle section 62 of the self-expanding frame 50 has the proximal end 68 and a distal end 72 connected to the proximal end 74 of the elongated distal section 64. The section 62 tapers outwardly from a diameter of approximately 22 mm at the end 68 to a diameter of approximately 28 mm at the end 72. In the illustrative embodiment, the middle section 62 has a length 76 of approximately 10 mm. In other embodiments, the dimensions of the section 62 may vary depending on, for example, the patient's anatomy. Among other things, the tapered sections 60, 62 of the proximal component 12 permit the placement of the stents 24 that extend from the distal component 14 to the coronary arteries, as described in greater detail below.

[0061] The elongated distal section 64 of the self-expanding frame 50 extends distally from the proximal end 74 to the distal end 30 of the component 12. In the illustrative embodiment, the section 64 has a length 78 that is greater than the combined length of the tapered sections 60, 62. In one particular non-limiting example, the length 78 of the elongated distal section 64 is

approximately 25 mm and has a diameter 80 of approximately 28 mm. In other embodiments, the dimensions of the section 64 may vary depending on, for example, the patient's anatomy. In one exemplary embodiment, the distal section 64 may taper between the proximal end 74 and the distal end 30.

[0062] As shown in FIG. 3, the proximal section 60 of the self-expanding frame 50 is formed in an open-cell stent configuration, and the sections 62, 64 are formed in a Z-stent configuration. It should be appreciated that in other embodiments the sections 60, 62, 64 may be formed in a single configuration, including an open-cell stent configuration or Z-stent configuration. The sections 60, 62, 64 may also be formed as a single monolithic component. The outer surface 82 of the self-expanding frame 50 is covered with low profile polyester, ePTFE, or other nonporous covering material 84 such that fluid is prevented from passing through the surface 82. In that way, the entire outer surface of the component 12 is covered to prevent fluid from passing therethrough. The covering material 84 immediately distal to the balloon-expandable frame 34 is equipped with a "trap door" 86, which may be opened to permit the passage of one or more surgical instruments for embolization of possible paravalvular leaks. The entire outer surface of component 12 may be also covered with low-profile Dacron or other synthetic material. It should also be appreciated that all or part of the component 12 may be covered with hydrogel or other sealing material.

[0063] As described above, the device 10 also includes a distal component 14, which is secured to the distal end 30 of the proximal component 12 when the device 10 is implanted in the patient's aorta 16. Referring now to FIG. 4, the distal component 14 includes a frame 100 that extends from a proximal end 102 configured to be secured to the proximal component 12 to a distal end 104. The frame 100 has a passageway 106 defined therein, which extends through the ends

102, 104 of the component 14. The passageway 106 has a diameter 108 and is sized to receive the distal end 30 of the proximal component 12 when the device 10 is assembled.

[0064] In the illustrative embodiment, the components 12, 14 are secured together via an interference fit between the frame 100 and the distal end 30 of the proximal component 12. Specifically, the diameter 108 of the passageway 106 is less than the diameter 80 of the proximal component 12. In the illustrative embodiment, the diameter 108 is equal to approximately 26 mm. It should be appreciated that in other embodiments the components 12, 14 may be secured together via stitching or other fastening means.

[0065] As shown in FIG. 4, the component 14 includes a proximal frame 110 that is connected to an elongated distal frame 112. The proximal frame 110 and the distal frame 112 are formed from metallic materials, such as, nitinol, stainless steel, or other implant grade metallic materials. It should be appreciated that in other embodiments the frames 110, 112 may be formed from a polymeric material. The proximal frame 110 is formed in a Z-stent configuration, and the distal frame 112 is formed in an open-cell configuration. Each of the frames 110, 112 is self-expanding. In the illustrative embodiment, the distal frame 112 is secured to the distal end 114 of the proximal frame 110 by stitching or sewing the frames 110, 112 together. It should be appreciated that in other embodiments the frames 110, 112 may be secured together via welding or other fasteners. The frames 110, 112 may also be formed as a single, monolithic frame.

[0066] The proximal frame 110 has an outer surface 120 that is covered with low profile polyester, ePTFE, or other nonporous covering material 122. As a result, fluid is prevented from passing through the surface 120. The distal frame 112 is uncovered such that fluid is permitted to pass through the openings 124 formed therein.

[0067] As shown in FIG. 4, the proximal frame 110 includes a proximal section 126, an outwardly tapered section 128 extending distally from the proximal section 126, and an elongated distal section 130. The proximal section 126 includes the proximal end 102 of the component 14 and has a distal end 132 connected to the proximal end 134 of the outwardly tapered section 128. In the illustrative embodiment, the proximal section 126 has a length 136 of approximately 25 mm. It should be appreciated that in other embodiments the dimensions of the section 126 may vary depending on, for example, the patient's anatomy.

[0068] The tapered section 128 of the frame 110 has the proximal end 134 and a distal end 140 connected to the proximal end 142 of the elongated distal section 130. The section 128 tapers outwardly from a diameter of approximately 26 mm at the end 132 to a diameter between approximately 44 mm and 48 mm at the end 140. In the illustrative embodiment, the tapered section 128 has a length 146 of approximately 10 mm. It should be appreciated that in other embodiments the dimensions of the section 128 may vary depending on, for example, the patient's anatomy.

[0069] The elongated distal section 130 of the frame 110 extends distally from the proximal end 142 to the distal end 114 of the frame 110. In the illustrative embodiment, the section 130 has a length 150. In one particular non-limiting example, the length 150 of the elongated distal section 130 is approximately 20 mm. The section 130 also has a diameter 152 of between approximately 44 mm and 48 mm. In other embodiments, the dimensions of the section 130 may vary depending on, for example, the patient's anatomy.

[0070] As described above, the distal component 14 also includes a pair of conduits 22, which are connected to the proximal frame 110. Each conduit 22 has a distal end 160 secured to the tapered section 128 of the frame 110 and a proximal end 162 positioned adjacent to the

proximal end 102 of the component 12. As shown in FIG. 4, the conduit 22 does not extend beyond the proximal end 102 of the component 12. Each conduit 22 has a passageway 164 that extends through the ends 160, 162 and is sized to receive a stent 24.

[0071] The passageway 164 has a proximal opening 166 defined in the end 162. The opening 166 has a diameter 168 that in the exemplary embodiment is equal to approximately 5 mm. As shown in FIG. 5, the passageway 164 has a distal opening 170 that is defined in the end 160 and the tapered section 128 of the frame 110. The distal opening 170 has a diameter 172 that is greater than the diameter 168. In the illustrative embodiment, the diameter 172 is equal to approximately 8 mm. The passageway 164 measures approximately 8 mm in diameter over a distance 174 of approximately 5 mm and tapers smoothly into the approximately 5 mm diameter 168 at a junction 176. The passageway 164 maintains the diameter 168 between the junction 176 and the proximal opening 166. In the illustrative embodiment, the passageway 164 has a length 180 of approximately 2 cm between the junction 176 and the proximal opening 166.

[0072] Each conduit 22 is wire reinforced and allows for passage of catheters or stents 24 and easier cannulation of the coronary ostia, regardless of deployment orientation. This configuration allows stenting of the coronary arteries 182 (see FIG. 1) prior to the deployment of component 12, as described in greater detail below. In the illustrative embodiment, the tapered section 128 permits the uncompromised passage of stents 24 into the coronary arteries 182 in such a way that the stents are not compressed between the sinutubular junction and the device 10 itself.

[0073] As shown in FIG. 4, the elongated distal frame 112 of the component 14 extends distally from the distal end 114 of the frame 110 to the distal end 104 of the component 14. In the illustrative embodiment, the frame 112 has a length 190. In one particular non-limiting example, the length 190 of the elongated frame 112 is approximately 10 cm, which is sufficient to cover the

arch 20 of the aorta 18 when implanted therein. In other embodiments, the dimensions of the frame 112 may vary depending on, for example, the patient's anatomy. The distal frame 112 permits the accurate deployment of component 14 without compromising the circulation to supra-aortic branches. It also allows for cannulation of the supra-aortic branches, if placement of a fenestrated/ branch arch device is necessary.

[0074] To implant the device 10 in the patient's aorta 16, a surgeon may obtain open exposure or percutaneous access to the common femoral artery. The iliac arteries or an iliac conduit may also be used. After obtaining access and placing a stiff wire in the ascending aorta 18, the device 10 and the delivery system are prepared. In the illustrative embodiment, the delivery system is composed of a 100-105 cm hydrophilic sheath. As shown in FIG. 6, the distal component 14 is delivered first. After performing a lateral oblique thoracic aortogram, the component 14 is deployed such that the distal end 114 of the proximal frame 110 is positioned proximal to the innominate artery 200, thereby ensuring that the distal openings 170 of the conduits 22 are at 12 and 6 o'clock positions in relationship to the innominate artery 200.

[0075] Using the contralateral common femoral artery wires, standard coronary guide catheters are introduced through the distal frame 112 of the component 14 into each conduit 22. The conduits 22 may then be cannulated with the catheters prior to insertion of the stents 24. Alternatively, the conduits 22 may be pre-cannulated. Using the catheters, access is obtained to the right and left coronary arteries 182. The stents 24 are advanced into the passageways 164 through the distal openings 170 and out of the conduits 22 to bridge the arteries 182 and the conduits 22, as shown in FIG. 7. In that way, each artery 182 is connected to its respective conduit 22. Each stent 24 is covered and may be embodied as a balloon-expandable stent or a self-

expanding stent. It should be appreciated that coronary artery bypasses may be performed to the right and left coronary systems prior to the placement of the component 14.

[0076] The proximal component 12 may be deployed after the implantation of the distal component 14. The components 12, 14 may be deployed in a single surgical procedure taking place on a single day or the component 14 may be deployed in one procedure, and the component 12 may be deployed in another, separate procedure at a later date. As shown in FIG. 1, the proximal component 12 is deployed into the position across the native aortic valve 202.

[0077] To do so, a stiff wire is passed through the aortic valve 202 into the left ventricle 204. The delivery system for the proximal component 12 is passed through the valve 202. An example of a delivery system is described in U.S. Patent No. 5,102,417 entitled "Expandable Intraluminal Graft, and Method and Apparatus for Implanting an Expandable Intraluminal Graft" by Julio C. Palmaz, which is incorporated herein by reference. When the delivery system is in position, the proximal component 12 is released by unsheathing the system, thereby permitting expansion of the self-expanding frame 50. As described above, the self-expanding frame 50 engages the proximal end 102 of the distal component 14 to secure the components 12, 14 together and seal the distal end 30 of the component 12 within the distal component 14. As shown in FIG. 2, the proximal end 28 of the proximal component 12 is positioned in the aortic annulus, and the hour-glass shape of the component 12 provides a space for the native aortic valve leaflets such that the leaflets are not pressed against or over the openings of coronary arteries 182.

[0078] The balloon-expandable frame 34 may be now deployed by inflating the balloon within the delivery system. This deploys the frame 34 to the predetermined expanded diameter 46 and advances the frame 34 into engagement with the aortic annulus 210, thereby sealing the aortic annulus 210 such that fluid is permitted to pass from the left ventricle 204 only through the valve

32. As shown FIG. 1, the valve 32 is positioned in the aortic annulus 210 proximal to the coronary arteries 182. It should be appreciated that the deployment of the component 12 may be performed during rapid ventricular pacing (RVP). In cases with aortic stenosis, the valve 32 may be dilated with balloon angioplasty prior to the introduction of the proximal component 12.

[0079] Referring now to FIGS. 8-16, another embodiment of a proximal component 212 of the device 10 is shown. Some features of the embodiment illustrated in FIGS. 8-16 are substantially similar to those described above in reference to the embodiment of FIGS. 1-7. Such features are designated in FIGS. 8-16 with the same reference numbers as those used in FIGS. 1-7. Similar to the proximal component 12 of FIGS. 1-7, the proximal component 212 may be secured to the distal component 14 when implanted into a patient's aorta 16. When implanted, the proximal component 212 is positioned in the patient's ascending aorta 18, while the distal component 14 extends distally into the arch 20 of the patient's aorta 16.

[0080] As shown in FIG. 8, the proximal component 212 includes a dual-frame 214 that extends from a proximal end 28 to a distal end 30. The frame 214 is attached to a valve 32 (shown in phantom), which is positioned at the proximal end 28 of the component 212. In the illustrative embodiment, the valve 32 is configured as a bicuspid valve. It should be appreciated that in other embodiments the valve 32 may be tricuspid or quadracuspid. The valve 32 may be constructed from treated bovine pericardium or other suitable proven biological or synthetic material. When the proximal component 212 is implanted into the patient's aorta 16, the valve 32 replaces the aortic valve and permits fluid (i.e., blood) to selectively pass from the heart and into a passageway 36 extending through the proximal component 212.

[0081] The dual-frame 214 of the proximal component 212 includes a self-expanding outer frame 216 and a balloon-expandable inner frame 218 that is secured to the self-expanding outer

frame 216 and houses the valve 32. Referring now to FIG. 9, the self-expanding outer frame 216 has a generally hourglass shape and is formed from a metallic material, such as, nitinol, stainless steel, or other implant grade metallic material. It should be appreciated that in other embodiments the outer frame 216 may be formed from a polymeric material. The outer frame 216 includes an elongated proximal section 220, an inwardly tapered section 222, an outwardly tapered middle section 62, and an elongated distal section 64.

[0082] The elongated proximal section 220 of the outer frame 216 includes the proximal end 28 of the component 212 and has a distal end 224 connected to a proximal end 226 of the inwardly tapered section 222. The proximal section 220 is embodied as a tubular stent. It should be appreciated that in other embodiments the section 220 may be shaped as a prism, cone, or other geometric shape depending on the patient's anatomy.

[0083] In the illustrative embodiment, the proximal section 220 has a length 228 that is equal to approximately 15 mm. The proximal section 220 also has a diameter 230 of approximately 32 mm. It should be appreciated that in other embodiments the dimensions of the frame 216 may vary according to the anatomy of the patient. In the illustrative embodiment, the diameter 230 is oversized relative to the diameter of the aortic annulus 210 such that an interference fit is created between the proximal section 220 and the annulus 210 when the component 212 is implanted, as described in greater detail below. As shown in FIG. 9, the proximal section 220 defines a passageway 232 in the outer frame 216.

[0084] In the illustrative embodiment, collagen fibers 234 are attached to the proximal section 220 to aid in preventing paravalvular leaks and migration of the proximal component 212 within the aortic walls. The fibers 234 extend outwardly from the proximal section 220 and inwardly into the passageway 232. It should be appreciated that in other embodiments the outer

frame 216 may be covered with hydrogel or other sealing materials. In other embodiments, a plurality of barbs or hooks may be attached to the proximal section 220. The hooks may be configured to further engage the tissue of the aorta and inhibit or prevent migration of the device 10.

[0085] The inwardly tapered section 222 of the outer frame 216 includes the proximal end 226 and has a distal end 236 connected to the proximal end 68 of the outwardly tapered middle section 62. The section 222 tapers inwardly between the ends 226, 236 from approximately 32 mm at the end 226 to approximately 22 mm at the end 236. In the illustrative embodiment, the inwardly tapered section 222 has a length 238 of approximately 10 mm.

[0086] The outwardly tapered middle section 62 of the self-expanding frame 216 has the proximal end 68 and a distal end 72 connected to the proximal end 74 of the elongated distal section 64. The section 62 tapers outwardly from a diameter of approximately 22 mm at the end 68 to a diameter of approximately 28 mm at the end 72. In the illustrative embodiment, the middle section 62 has a length 76 of approximately 10 mm. In other embodiments, the dimensions of the section 62 may vary depending on, for example, the patient's anatomy.

[0087] The elongated distal section 64 of the self-expanding frame 216 extends distally from the proximal end 74 to the distal end 30 of the component 212. In the illustrative embodiment, the section 64 has a length 78 that is greater than the combined length of the tapered sections 60, 62. In one particular non-limiting example, the length 78 of the elongated distal section 64 is approximately 30 mm and has a diameter 80 of approximately 34 mm. In other embodiments, the dimensions of the section 64 may vary depending on, for example, the patient's anatomy. In one exemplary embodiment, the distal section 64 may taper between the proximal end 74 and the distal end 30.

[0088] As shown in FIG. 9, the proximal section 220 and the inwardly tapered section 222 of the self-expanding frame 216 are formed in an open-cell stent configuration, and the sections 62, 64 are formed in a Z-stent configuration. It should be appreciated that in other embodiments the sections 62, 64, 220, 222 may be formed in a single configuration, including an open-cell stent configuration or Z-stent configuration. The sections 62, 64, 220, 222 may also be formed as a single monolithic component. The outer surface 240 of the sections 62, 64, 222 are covered with low profile polyester, ePTFE, or other nonporous covering material 242 such that fluid is prevented from passing through the surface 240. The covering material 242 immediately distal to the proximal section 220 is equipped with a "trap door" 86, which may be opened to permit the passage of one or more surgical instruments for embolization of possible paravalvular leaks. The outer surface 240 of the sections 62, 64, 222 may be also covered with low-profile Dacron or other synthetic material. It should also be appreciated that all or part of the frame 216 may be covered with hydrogel or other sealing material.

[0089] As described above, the outer frame 216 of the dual-frame 214 is secured to a balloon-expandable inner frame 218, which is positioned in the passageway 232. As shown in FIG. 10, the frame 218 houses the valve 32. The balloon-expandable frame 218 is embodied as a balloon-expandable tubular stent 244 that has a length 246 of approximately 15 mm. In other embodiments, the stent 244 may be longer or shorter depending on, for example, the patient's anatomy. The stent 244 is tubular and is constructed of a metallic material, such as, nitinol, stainless steel, or other implant grade metallic material, in an open-cell configuration. It should be appreciated that in other embodiments the stent 244 may be formed from a polymeric material and may be formed in, for example, a Z-stent configuration. In the illustrative embodiment, the outer surface 248 of the stent 244 is covered with low-profile polyester, ePTFE, or other nonporous

covering material 250 that prevents fluid from passing through the outer surface 248. However, it should be appreciated that the stent 244 may be covered with standard polyester, ePTFE or other nonporous materials.

[0090] As shown in FIG. 10, the stent 244 of the inner frame 218 has a diameter 252. As described in greater detail below, the balloon-expandable frame 218 is expandable during implantation from an unexpanded diameter (not shown) to the expanded diameter 252. In the illustrative embodiment, the expanded diameter 252 is equal to approximately 26 mm when the inner frame 218 is expanded. In other embodiments, the expanded diameter may be equal to, or greater than, the diameter 230 of the proximal section 220 of the outer frame 216. In the illustrative embodiment, the expanded diameter 252 is oversized relative to the diameter of the aortic annulus 210 such that an interference fit is created between the proximal section 220 and the annulus 210 when the component 212 is implanted, and the inner frame 218 is expanded, as described in greater detail below.

[0091] Referring now to FIG. 11, the inner frame 218 of the dual-frame component 214 is secured to the outer frame 216 via a plurality of stitches 260. It should be appreciated that in other embodiments soldering, welding or other fasteners may be used to secure the inner frame 218 to the outer frame 216. As shown in FIGS. 11-14, the inner frame 218 and the valve component 32 are positioned in the passageway 232 defined in the self-expanding frame 216. When the inner frame 218 is unexpanded, the outer surface 248 of the stent 244 is spaced apart from the fibers 234 attached to the outer frame 216. In the illustrative embodiment, a gap 264 is defined therebetween, and the gap 264 has a magnitude of about 2 mm to about 3 mm.

[0092] As shown in FIG. 14, the balloon-expandable inner frame 218 may be expanded in the direction indicated by arrows 266. As described above, the diameter 230 of the proximal

section 220 of the outer frame 216 is oversized relative to the diameter of the aortic annulus 210. As such, when the component 212 is implanted, the proximal section 220 is reduced to the diameter of the annulus 210. Because the expanded diameter 252 of the stent 244 is greater than the diameter of the annulus, the outer surface 248 of the stent 244 engages the fibers 234 (and hence the inner surface of the proximal section 220 of the outer frame 216) through the covering material 250. In that way, the gap 264 is closed, and the fibers 234 and the covering material 250 create a seal between the inner frame 218 and the outer frame 216.

[0093] To implant an endograft device 10 that includes proximal component 212 in the patient's aorta 16, a surgeon may obtain open exposure or percutaneous access to the common femoral artery. The surgeon may then implant the distal component 14 in the manner described above in regard to FIGS. 1-7 and advance the stents 24 into position in the arteries 182. The proximal component 212 may be deployed after the implantation of the distal component 14. To do so, a stiff wire is passed through the aortic valve 202 into the left ventricle 204. The delivery system for the proximal component 212 is then passed through the valve 202.

[0094] When the delivery system is in position, the proximal component 212 is released by unsheathing the system, thereby permitting expansion of the self-expanding frame 216. The self-expanding frame 216 engages the proximal end 102 of the distal component 14 to secure the components 212, 14 together and seal the distal end 30 of the component 212 within the distal component 14.

[0095] When the frame 216 is unsheathed, the proximal section 220 expands into engagement with the aortic annulus 210, thereby creating an interference fit between the frame 216 and the annulus 210 and stabilizing the device 10 in place. As shown in FIG. 15, the inner frame 218 is initially unexpanded within the outer frame 216. The inner frame 218 may be

deployed by expanding the balloon assembly. Expansion of the balloon-expandable inner frame 218 engages the inner frame 218 with the outer frame 216 and compresses the collagen fiber/hydrogel coated proximal section 220 of the outer frame 216 against the aortic annulus 210. As shown in FIG. 16, the combined engagement of the frames 216, 218 seals the annulus 210 and the paravalvular areas, and thus, prevents paravalvular leakage. As such, fluid is permitted to pass from the left ventricle 204 only through the valve 32 of the component 212. As shown FIGS. 15-16, the valve 32 is positioned in the aortic annulus 210 proximal to the coronary arteries 182. It should be appreciated that the deployment of the component 212 may be performed during rapid ventricular pacing (RVP). In cases with aortic stenosis, the valve 32 may be dilated with balloon angioplasty prior to the introduction of the proximal component 212.

[0096] In each of the embodiments described above, the self-expanding frame portion of proximal components 12, 212 significantly improves the accuracy and control of the deployment of the device 10. The bicuspid configuration of the valve 32 serves three distinct purposes, including (1) by reducing the number of valve commissures to two, the profile will be reduced, (2) the valve 32 may conform better to the aortic annulus, and (3) when the annulus is asymmetrical, the incidence of aortic insufficiency may be reduced.

[0097] Referring now to FIGS. 17-22, the proximal component 12 or the proximal component 212 may be used as a transcatheter valve with slight modification. Such a valve may be deployed via a transfemoral or trans-axillary route, as will be described in further detail below.

[0098] Referring now to FIGS. 17-19, one embodiment of a transcatheter valve component 312 is shown. Some features of the embodiment illustrated in FIGS. 17-19 are substantially similar to those described above in reference to the proximal component 12 of FIGS. 1-7. Such features are designated in FIGS. 17-19 with the same reference numbers as those used in FIGS. 1-7. Similar

to the proximal component 12 of FIGS. 1-7, the transcatheter valve component 312 includes a frame 26 that extends from a proximal end 28 to a distal end 30. The frame 326 is attached to a valve 32 (shown in phantom), which is positioned at the proximal end 28 of the valve component 312. When the valve component 312 is implanted into the patient's aorta 16, the valve 32 replaces the aortic valve and permits fluid (i.e., blood) to selectively pass from the heart and into a passageway 36 extending through the valve component 312.

[0099] The valve 32 is housed in a balloon-expandable frame 34 of the frame 26. As shown in FIG. 17, the balloon-expandable frame 34 is embodied as a balloon-expandable stent 38 that extends distally from the proximal end 28 of the transcatheter valve component 312 and has a length 40 of approximately 15 mm. In other embodiments, the stent 38 may be longer or shorter depending on, for example, the patient's anatomy. The stent 38 is tubular and is constructed of a metallic material, such as, nitinol, stainless steel, or other implant grade metallic material, in an open-cell configuration. It should be appreciated that in other embodiments the stent 38 may be formed from a polymeric material and may be formed in, for example, a Z-stent configuration. In the illustrative embodiment, the outer surface 42 of the stent 38 is covered with low-profile polyester, ePTFE, or other nonporous covering material 44 that prevents fluid from passing through the outer surface 42. However, it should be appreciated that the stent 38 may be covered with standard polyester, ePTFE or other nonporous materials.

[00100] As shown in FIG. 17, the stent 38 of the balloon-expandable frame 34 has a diameter 46. As described in greater detail below, the balloon-expandable frame 34 is expandable during implantation from an unexpanded diameter (not shown) to the expanded diameter 46. In the illustrative embodiment, the expanded diameter 46 is equal to approximately 26 mm when the frame 34 is expanded. In other embodiments, the expanded diameter may be greater than or less

than 26 mm depending on, for example, the patient's anatomy. In the illustrative embodiment, the diameter 46 is oversized relative to the diameter of the aortic annulus 210 such that an interference fit is created between the stent 38 and the annulus 210 when the transcatheter valve component 312 is implanted.

[00101] The balloon-expandable frame 34 is attached to a self-expanding frame 350. In the illustrative embodiment, the distal end 52 of the balloon-expandable frame 34 is secured to the proximal end 54 of the frame 350 by stitching or sewing the frames 34, 350 together, thereby forming the frame 26 of the transcatheter valve component 312. It should be appreciated that in other embodiments the frames 34, 350 may be secured together via welding or other fasteners. The frames 34, 350 may also be formed as a single, monolithic frame.

[00102] As shown in FIG. 17, the self-expanding frame 350 has a generally hourglass shape and is formed from a metallic material, such as, nitinol, stainless steel, or other implant grade metallic material. It should be appreciated that in other embodiments the frame 350 may be formed from a polymeric material. The frame 350 includes an inwardly tapered proximal section 360, an outwardly tapered middle section 62, and an elongated distal section 64. The section 360 includes the proximal end 54 of the frame 350 and has a distal end 66 connected to the proximal end 68 of the outwardly tapered middle section 62. The section 360 tapers inwardly between the ends 54, 66 from approximately 26 mm at the end 54 to approximately 22 mm at the end 66. In the illustrative embodiment, the proximal section 360 has a length 70 of approximately 15 mm.

[00103] The outwardly tapered middle section 62 of the self-expanding frame 350 has the proximal end 68 and a distal end 72 connected to the proximal end 74 of the elongated distal section 64. The section 62 tapers outwardly from a diameter of approximately 22 mm at the end 68 to a diameter of approximately 28 mm at the end 72. In the illustrative embodiment, the middle

section 62 has a length 76 of approximately 10 mm. In other embodiments, the dimensions of the section 62 may vary depending on, for example, the patient's anatomy.

[00104] The elongated distal section 64 of the self-expanding frame 350 extends distally from the proximal end 74 to the distal end 30 of the valve component 312. In the illustrative embodiment, the section 64 has a length 78 that is greater than the combined length of the tapered sections 60, 62. In one particular non-limiting example, the length 78 of the elongated distal section 64 is approximately 30 mm and has a diameter 80 of approximately 34 mm. In other embodiments, the dimensions of the section 64 may vary depending on, for example, the patient's anatomy. In one exemplary embodiment, the distal section 64 may taper between the proximal end 74 and the distal end 30.

[00105] As shown in FIG. 3, the proximal section 360 of the self-expanding frame 350 is formed in an open-cell stent configuration, and each of the sections 62, 64 is formed in a Z-stent configuration. It should be appreciated that in other embodiments the sections 360, 62, 64 may be formed in a single configuration, including the open-cell stent configuration, mesh-like stent configuration, or Z-stent configuration. The sections 60, 62, 64 may also be formed as a single monolithic component.

[00106] As shown in FIG. 17, the outer surface 314 of the proximal section 360 of the frame 350 is uncovered such that fluid is permitted to pass through the openings 318. The outer surface 316 of the sections 62, 64 are covered with low profile polyester, ePTFE, or other nonporous covering material 84 such that fluid is prevented from passing through the surface 320. The outer surface 320 of the valve component 312 may also be covered with low-profile Dacron or other synthetic material. The uncovered, open cell stent section 360 is configured to allow for coronary artery perfusion. The covered sections 62, 64 serve to stabilize the valve component 312 against

the aorta 18 and provide a docking station to ascending aortic extensions or fenestrated/ branch arch grafts. The covered sections 62, 64 would also permit endograft extension of the valve component 312 for suitable type B aneurysms without dilation of the sinutubular junction.

[00107] The delivery of the transcatheter valve component 312 may begin by gaining access to the left ventricle across the native aortic valve. An ascending aortogram may be performed to locate the right and left coronary arteries. An over the wire introducer system, including a guidewire, is used to introduce the valve component 312 into the aorta 18. After the guidewire has been placed into the left ventricle 204 via the iliofemoral, subclavian, or carotid vessels, the valve component 312 may be delivered through the common femoral artery and passed across the native aortic valve 202. After performing an angiogram to delineate the location of the coronary arteries 182, the valve component 312 is released by unsheathing the delivery system, thereby permitting expansion of the self-expanding frame 350, as shown in FIGS. 18-19.

[00108] The balloon-expandable frame 34 may be now deployed by inflating the balloon within the delivery system. This deploys the frame 34 to the predetermined expanded diameter 46 and advances the frame 34 into engagement with the aortic annulus 210, thereby sealing the aortic annulus 210 such that fluid is permitted to pass from the left ventricle 204 only through the valve 32 and the valve 32 is positioned in the aortic annulus 210 proximal to the coronary arteries 182, as shown in FIGS. 18-19. The openings 318 of the uncovered section 360 of the valve component 312 permit blood flow to the coronary arteries 182 for promote circulation. It should be appreciated that the deployment of the valve component 312 may be performed during rapid ventricular pacing (RVP).

[00109] Referring now to FIGS. 20-22, another embodiment of a transcatheter valve component (hereinafter valve component 412) is shown. Some features of the embodiment

illustrated in FIGS. 20-22 are substantially similar to those described above in reference to the proximal component 212 of FIGS. 8-16. Such features are designated in FIGS. 20-22 with the same reference numbers as those used in FIGS. 8-16. Similar to the proximal component 212 of FIGS. 8-16, the valve component 412 includes a dual-frame 414 that extends from a proximal end 28 to a distal end 30. The frame 414 is attached to a valve 32 (shown in phantom), which is positioned at the proximal end 28 of the component 412. In the illustrative embodiment, the valve 32 is configured as a bicuspid valve. When the valve component 412 is implanted into the patient's aorta 16, the valve 32 replaces the aortic valve and permits fluid (i.e., blood) to selectively pass from the heart and into a passageway 36 extending through the valve component 412.

[00110] The dual-frame 414 includes a self-expanding outer frame 416 and a balloon-expandable inner frame 218 that is secured to the self-expanding outer frame 416 and houses the valve 32. Referring now to FIG. 9, the self-expanding outer frame 416 has a generally hourglass shape and is formed from a metallic material, such as, nitinol, stainless steel, or other implant grade metallic material. It should be appreciated that in other embodiments the outer frame 416 may be formed from a polymeric material. The outer frame 416 includes an elongated proximal section 220, an inwardly tapered section 422, an outwardly tapered middle section 62, and an elongated distal section 64.

[00111] The elongated proximal section 220 of the outer frame 416 includes the proximal end 28 of the component 412 and has a distal end 224 connected to a proximal end 226 of the inwardly tapered section 222. The proximal section 220 is embodied as a tubular stent. It should be appreciated that in other embodiments the section 220 may be shaped as a prism, cone, or other geometric shape depending on the patient's anatomy.

[00112] In the illustrative embodiment, the proximal section 220 has a length 228 that is equal to approximately 15 mm. The proximal section 220 also has a diameter 230 of approximately 32 mm. It should be appreciated that in other embodiments the dimensions of the frame 416 may vary according to the anatomy of the patient. In the illustrative embodiment, the diameter 230 is oversized relative to the diameter of the aortic annulus 210 such that an interference fit is created between the proximal section 220 and the annulus 210 when the valve component 412 is implanted, as described in greater detail below. As shown in FIG. 9, the proximal section 220 defines a passageway 232 in the outer frame 416.

[00113] In the illustrative embodiment, collagen fibers 234 are attached to the proximal section 220 to aid in preventing paravalvular leaks and migration of the valve component 412 within the aortic walls. The fibers 234 extend outwardly from the proximal section 220 and inwardly into the passageway 232. It should be appreciated that in other embodiments the outer frame 216 may be covered with hydrogel or other sealing materials. In other embodiments, a plurality of barbs or hooks may be attached to the proximal section 220. The hooks may be configured to further engage the tissue of the aorta and inhibit or prevent migration of the device 10.

[00114] The inwardly tapered section 422 of the outer frame 416 includes the proximal end 226 and a distal end 236 connected to the proximal end 68 of the outwardly tapered middle section 62. The section 422 tapers inwardly between the ends 226, 236 from approximately 32 mm at the end 226 to approximately 22 mm at the end 236. In the illustrative embodiment, the inwardly tapered section 422 has a length 238 of approximately 10 mm.

[00115] The outwardly tapered middle section 62 of the self-expanding frame 416 has the proximal end 68 and a distal end 72 connected to the proximal end 74 of the elongated distal

section 64. The section 62 tapers outwardly from a diameter of approximately 22 mm at the end 68 to a diameter of approximately 28 mm at the end 72. In the illustrative embodiment, the middle section 62 has a length 76 of approximately 10 mm. In other embodiments, the dimensions of the section 62 may vary depending on, for example, the patient's anatomy.

[00116] The elongated distal section 64 of the self-expanding frame 416 extends distally from the proximal end 74 to the distal end 30 of the component 412. In the illustrative embodiment, the section 64 has a length 78 that is greater than the combined length of the tapered sections 60, 62. In one particular non-limiting example, the length 78 of the elongated distal section 64 is approximately 30 mm and has a diameter 80 of approximately 34 mm. In other embodiments, the dimensions of the section 64 may vary depending on, for example, the patient's anatomy. In one exemplary embodiment, the distal section 64 may taper between the proximal end 74 and the distal end 30.

[00117] As shown in FIG. 20, each of the proximal section 220 and the inwardly tapered section 422 of the self-expanding frame 416 is formed in an open-cell stent configuration, and each of the sections 62, 64 is formed in a Z-stent configuration. It should be appreciated that in other embodiments the sections 62, 64, 220, 422 may be formed in a single configuration, including the open-cell stent configuration, mesh-like stent configuration, or Z-stent configuration. The sections 62, 64, 220, 422 may also be formed as a single monolithic component. The outer surfaces 440 of the sections 62, 64 are covered with low profile polyester, ePTFE, or other nonporous covering material 442 such that fluid is prevented from passing through the surface 440. The outer surface 444 of the section 422 is uncovered such that fluid is permitted to pass through openings 446 defined in the surface 444. The uncovered, open cell section 422 is configured to allow for coronary artery perfusion. The covered sections 62, 64 serve to stabilize the valve component 412

against the aorta 18 and provide a docking station to ascending aortic extensions or fenestrated/ branch arch grafts.

[00118] As described above, the outer frame 416 of the dual-frame 414 is secured to a balloon-expandable inner frame 218, which is positioned in the passageway 232 and houses the valve 32. As described above, the balloon-expandable frame 218 is expandable during implantation from an unexpanded diameter 450 to the expanded diameter (not shown).

[00119] To deploy the valve component 412, a stiff wire is passed through the aortic valve 202 into the left ventricle 204. The delivery system for the valve component 412 is then passed through the valve 202. When the delivery system is in position, the valve component 412 is released by unsheathing the system, thereby permitting expansion of the self-expanding frame 416. The proximal section 220 of the frame 416 expands into engagement with the aortic annulus 210, thereby creating an interference fit between the frame 416 and the annulus 210 and stabilizing the valve component 412 in place. As shown in FIG. 21, the inner frame 218 is initially unexpanded within the outer frame 416. The inner frame 218 may be deployed by expanding the balloon assembly. Expansion of the balloon-expandable inner frame 218 engages the inner frame 218 with the outer frame 416 and compresses the collagen fiber/hydrogel coated proximal section 220 of the outer frame 416 against the aortic annulus 210.

[00120] As shown in FIG. 22, the combined engagement of the frames 218, 416 seals the annulus 210 and the paravalvular areas, and thus, prevents paravalvular leakage. As such, fluid is permitted to pass from the left ventricle 204 only through the valve 32 of the component 412. The openings 446 of the uncovered section 422 of the valve component 412 permit blood flow to the coronary arteries 182 for promote circulation.

[00121] It should be appreciated that the design of components 12, 14, 212 and the transcatheter valves 312, 412 has intentionally taken into account the potential failure modes and allows for correction of any such failure modes. For example, with respect to components 12, 14, 212, paravalvular leaks may be corrected. More specifically, with respect to a paravalvular leak (type Ia endoleak), leakage around the valve 32 would act as a type la endoleak. The trapdoors 86 in components 12, 312 would allow for coil embolization of the area of the leak. Two trapdoors at 180 degree location would allow access to the entire area above the aortic annulus. Since the coronary arteries 182 are protected by the conduits 22 in the distal component 14, coil embolization of this area would not compromise the coronary blood flow. Coil embolization of paravalvular leaks are already being performed clinically after heart valve surgery if there are additional leaks around the valve.

[00122] Aortic insufficiency (Al) after implantation may also be corrected. Significant Al has been documented in up to 17% of patients after transcatheter valve implantation. Except heavy annular calcification, the tricuspid morphology of the current valves and the ovoid shape of the aortic annulus can cause malcoaptation of the valve leaflets causing Al. The bicuspid valve nature of the designs discussed herein potentially eliminates the problem with malcoaptation and AI secondary to that.

[00123] Structural valve degeneration may also be corrected. More specifically, the bicuspid valve design allows for placement of another transcatheter valve across the first device without compromising valvular flow area.

[00124] Coronary insufficiency may also be corrected. The Cabrol endo-conduits 22 in conjunction with the tapered section 128 of component 14 ensure uninterrupted coronary blood flow. By first deploying the component 14, the surgeon will be able to work through the Cabrol

conduits 22 and using standard catheters and guidewires to cannulate the right and left coronary arteries. Stents 24 are deployed from the coronary arteries into the Cabrol conduits 22. Deployment the component 12 or component 212 may be delayed until coronary blood flow is secured. The tapered design will mitigate the risk of compression of the coronary stents between the device 10 and the aortic wall.

[00125] For the transcatheter valves 312, 412, paravalvular leaks may also be corrected in that the open cell midsections 360, 422 of the valve allow the cannulation and stenting of the coronary arteries with potential coil embolization of the leak after the protection of the coronary artery if necessary.

[00126] Structural valve degeneration in the transcatheter valves 312, 412 may be corrected in that the bicuspid valve design permit for placement of another transcatheter valve across the first device without compromising valvular flow area.

[00127] The dual frame component may also take the form of other transcatheter valvular replacement devices such as, for example, prosthetic mitral and tricuspid valves. The dual frame component may also be used to enhance sealing zones of endovascular devices to treat abdominal and thoracic aneurysms, and in applications to treat peripheral vascular disease.

[00128] It will be appreciated that the devices and methods described herein have broad applications. The foregoing embodiments were chosen and described in order to illustrate principles of the methods and apparatuses as well as some practical applications. The preceding description enables others skilled in the art to utilize methods and apparatuses in various embodiments and with various modifications as are suited to the particular use contemplated. In accordance with the provisions of the patent statutes, the principles and modes of operation of this disclosure have been explained and illustrated in exemplary embodiments.

[00129] It is intended that the scope of the present methods and apparatuses be defined by the following claims. However, it must be understood that this disclosure may be practiced otherwise than is specifically explained and illustrated without departing from its spirit or scope. It should be understood by those skilled in the art that various alternatives to the embodiments described herein may be employed in practicing the claims without departing from the spirit and scope as defined in the following claims.

[00130] The scope of the disclosure should be determined, not with reference to the above description, but should instead be determined with reference to the appended claims, along with the full scope of equivalents to which such claims are entitled. It is anticipated and intended that future developments will occur in the arts discussed herein, and that the disclosed systems and methods will be incorporated into such future examples. Furthermore, all terms used in the claims are intended to be given their broadest reasonable constructions and their ordinary meanings as understood by those skilled in the art unless an explicit indication to the contrary is made herein. In particular, use of the singular articles such as "a," "the," "said," etc. should be read to recite one or more of the indicated elements unless a claim recites an explicit limitation to the contrary. It is intended that the following claims define the scope of the disclosure and that the method and apparatus within the scope of these claims and their equivalents be covered thereby. In sum, it should be understood that the disclosure is capable of modification and variation and is limited only by the following claims.

CLAIMS

1. An endograft device for endovascular repair of ascending aortic aneurysms, comprising:

a first prosthetic component comprising (i) a proximal frame, and (ii) a distal frame secured to the proximal frame and extending to a distal end of the first prosthetic component,

at least one conduit secured to the first prosthetic component and positioned adjacent to the proximal frame,

a second prosthetic component secured to a proximal end of the first prosthetic component, the second prosthetic component comprising (i) a balloon-expandable frame extending distally from a proximal end of the second prosthetic component, and (ii) a self-expanding frame connected to the balloon-expandable frame and extending to a distal end of the second prosthetic component, and

a valve element secured to the balloon-expandable frame at the proximal end of the second prosthetic component.

2. The endograft device of claim 1, wherein the self-expanding frame has an hourglass shape.

3. The endograft device of claim 2, wherein the self-expanding frame includes:

a first section that tapers inwardly between a proximal end and a distal end, and

a second section having a proximal end that is connected to the distal end of the first section, the second section tapering outwardly between the proximal end of the second section and a distal end of the second section.

4. The endograft device of claim 3, wherein the proximal end of the first section is secured to a distal end of the balloon-expandable frame.

5. The endograft device of claim 3, wherein:

the self-expanding frame includes a third section extending proximally from the proximal end of the first section, the third section having a passageway defined therein, and

the balloon-expandable frame is positioned in the passageway of the third section of the self-expanding frame.

6. The endograft device of claim 5, wherein the balloon-expandable frame is expandable between (i) an unexpanded position in which an outer surface of the balloon-expandable frame is spaced apart from an inner surface of the self-expanding frame and (ii) an expanded position in which the outer surface of the balloon-expandable frame is engaged with the inner surface of the self-expanding frame.

7. The endograft device of claim 6, wherein a plurality of fibers are attached to the third section of the self-expanding frame, and when the balloon-expandable frame is in the expanded position, the outer surface of the balloon-expandable frame is engaged with the plurality of fibers.

8. The endograft device of claim 1, wherein the proximal frame of the first prosthetic component has a passageway defined therein, and the distal end of the second prosthetic component is positioned in the passageway of the first prosthetic component.

9. The endograft device of claim 1, wherein the at least one conduit includes a pair of conduits positioned on opposite sides of the first prosthetic component.

10. A method of implanting a heart valve in a stent component, the method comprising:

placing a heart valve in a first component;

securing the first component within a second component,

wherein the deployment occurs endovascularly.

ABSTRACT OF THE DISCLOSURE

An intraluminal vascular prosthesis assembly, having a hollow cylindrical body with a first end and a second end is provided. The assembly includes, at its first end, a first vascular prosthesis portion, and at its second end, a second vascular prosthesis portion which has only a prosthesis material. The vascular prosthesis assembly has a stent portion which is provided between the first vascular prosthesis portion and the second vascular prosthesis portion, the stent portion being free of prosthesis material to allow fluid flow there through and received within the aortic arch and spanning the brachiocephalic artery, left common carotid artery, and left subclavian artery when placed within the aortic arch of a patient.

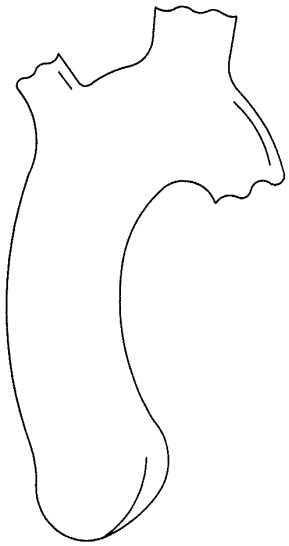

Fig. 1

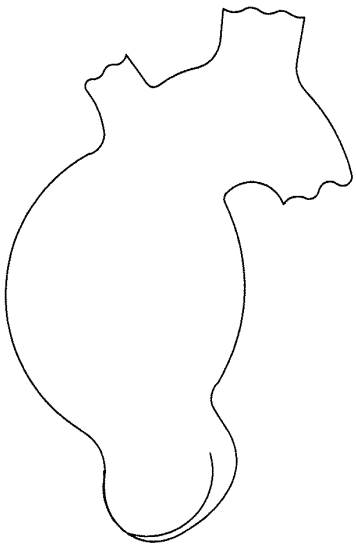

Fig. 1B

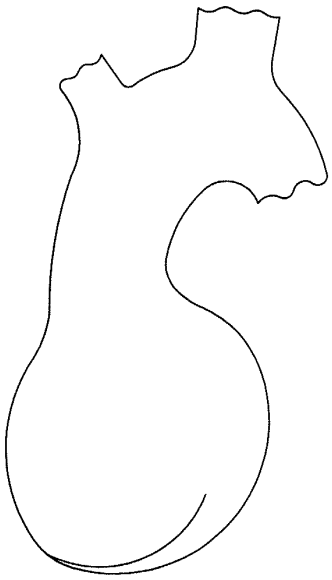

Fig. 1A

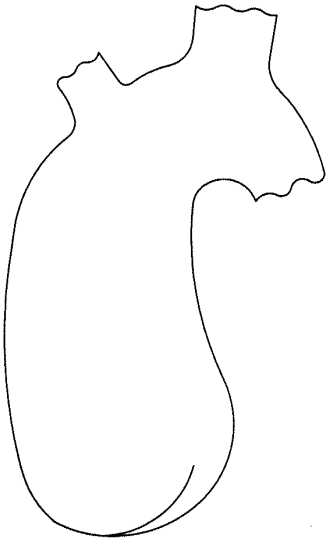

Fig. 1C

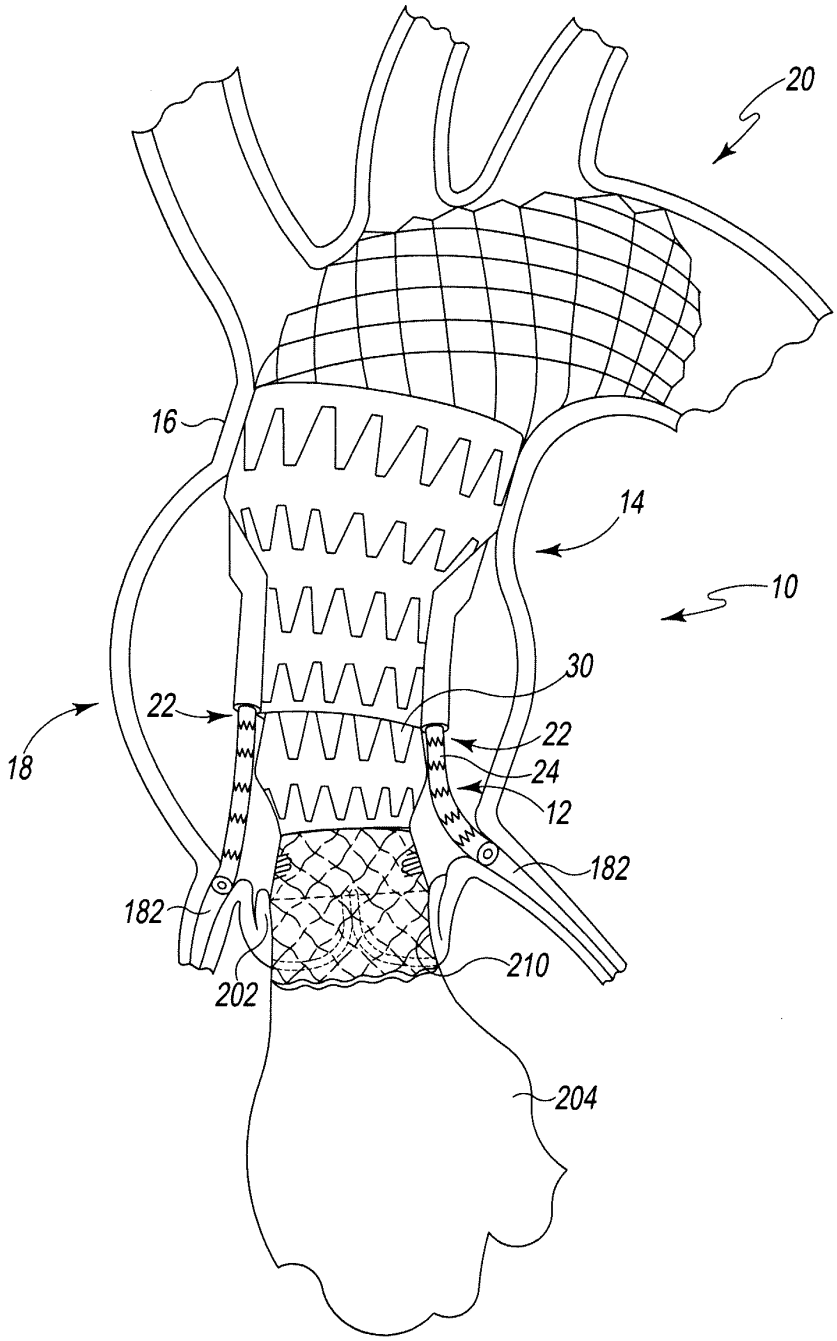

Fig. 2

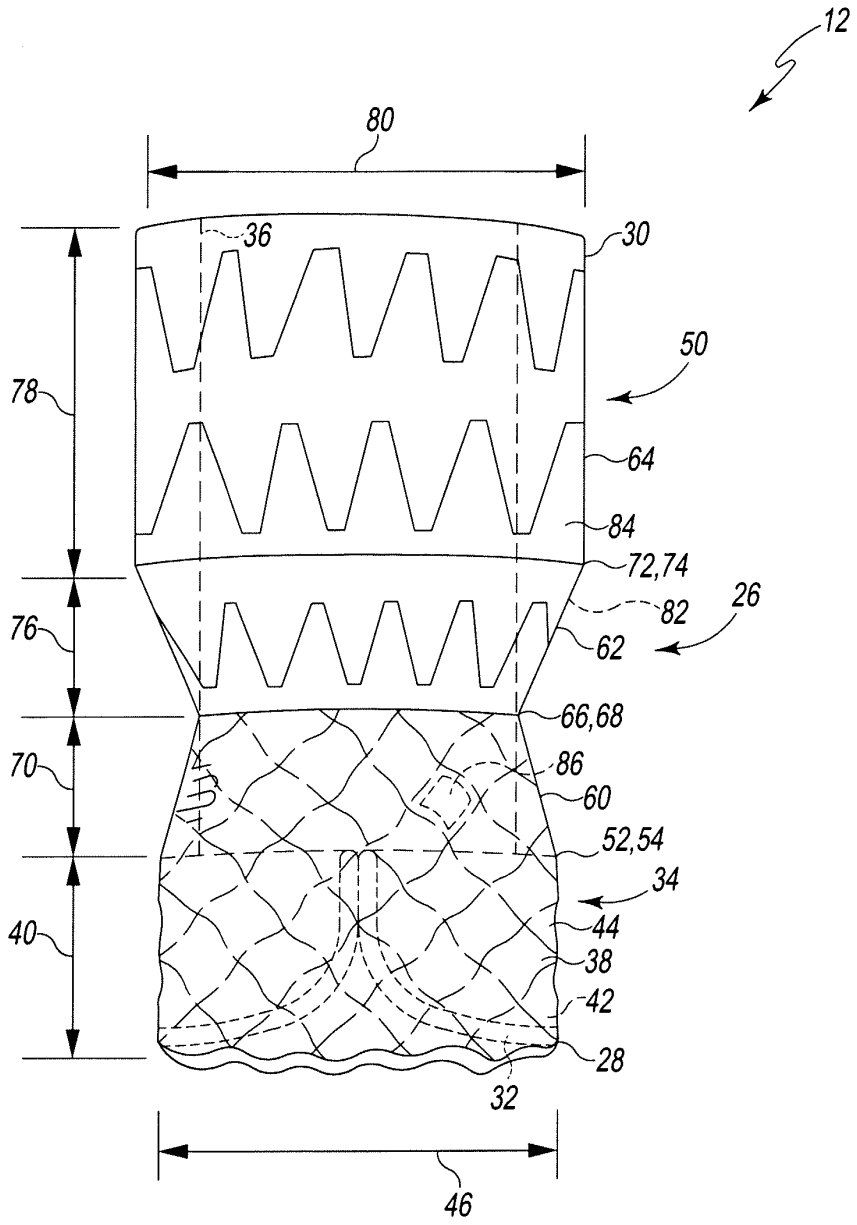
12
80
36
30
50
78
64
84
72,74
82
26
76
62
66,68
70
86
60
52,54
34
40
44
38
42
28
32
46

Fig. 3

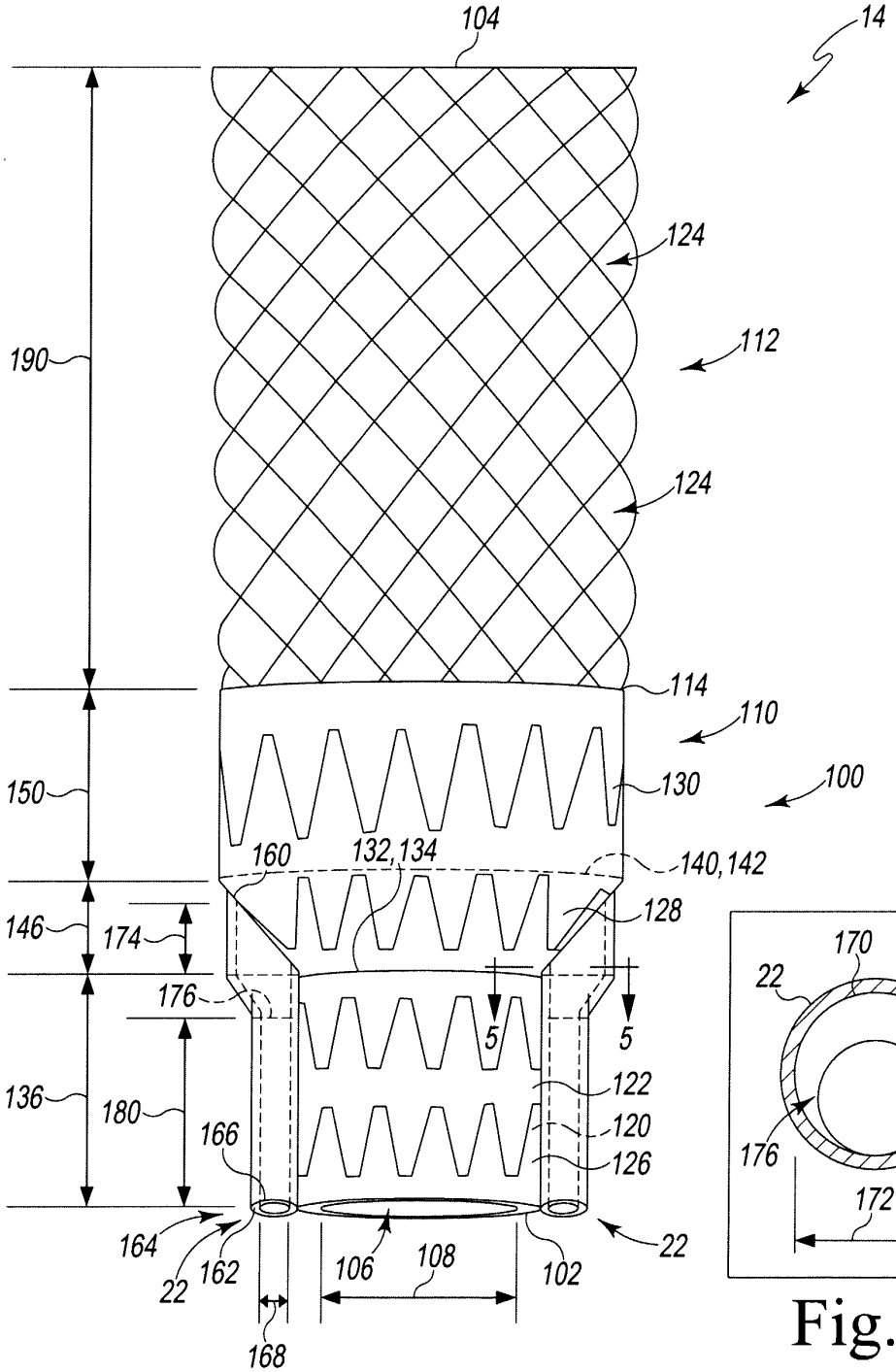
104
14
124
112
190
124
114
110
150
130
100
160
132,134
140,142
128
146
174
176
5
5
136
180
122
120
166
126
164
162
22
106
108
102
22
168

Fig. 4

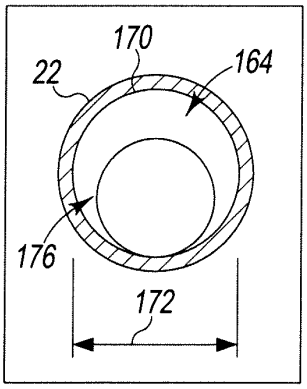
170
22
164
176
172

Fig. 5

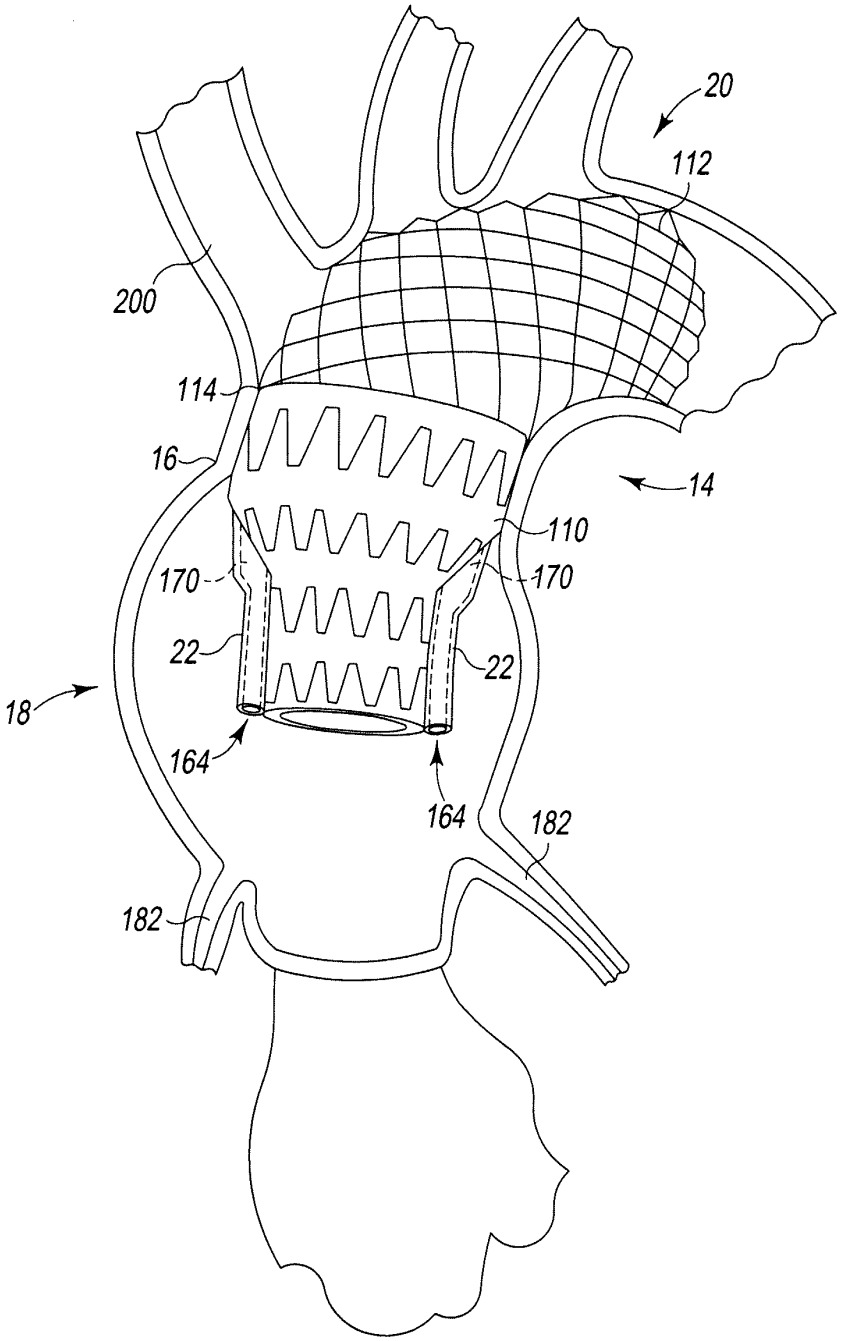

Fig. 6

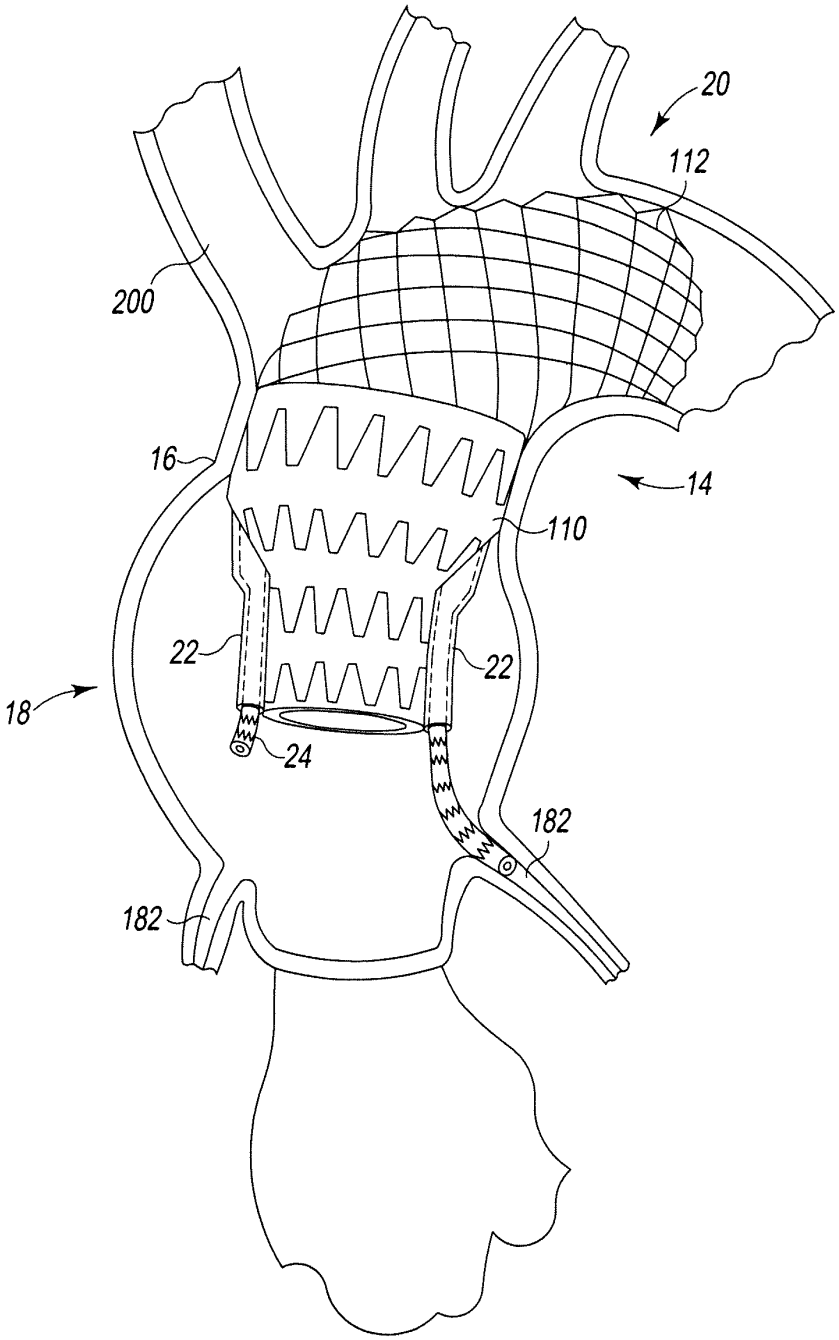

Fig. 7

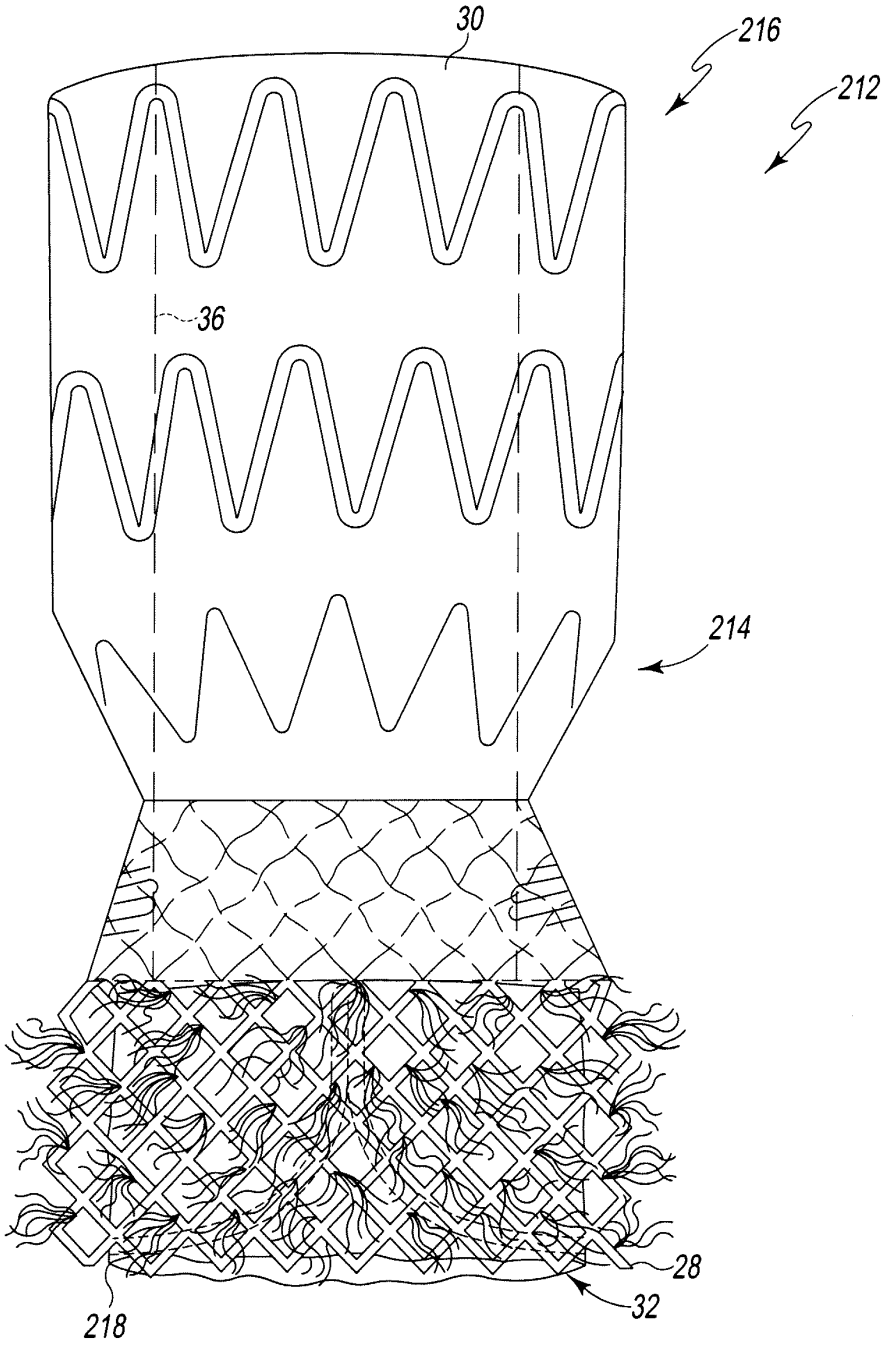

Fig. 8

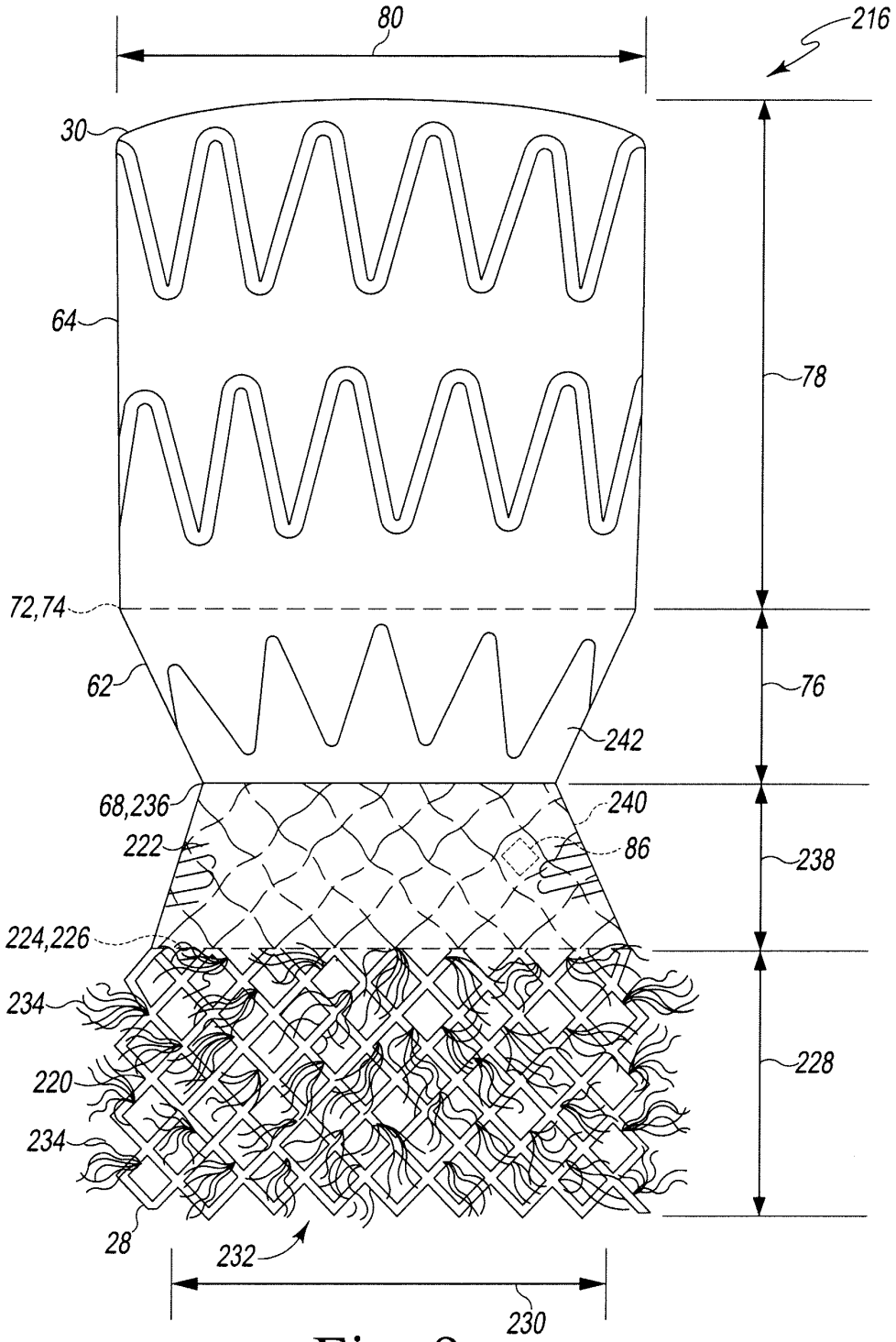
80
216
30
64
78
72,74
62
76
242
68,236
240
222
86
238
224,226
234
228
220
234
28
232
230

Fig. 9

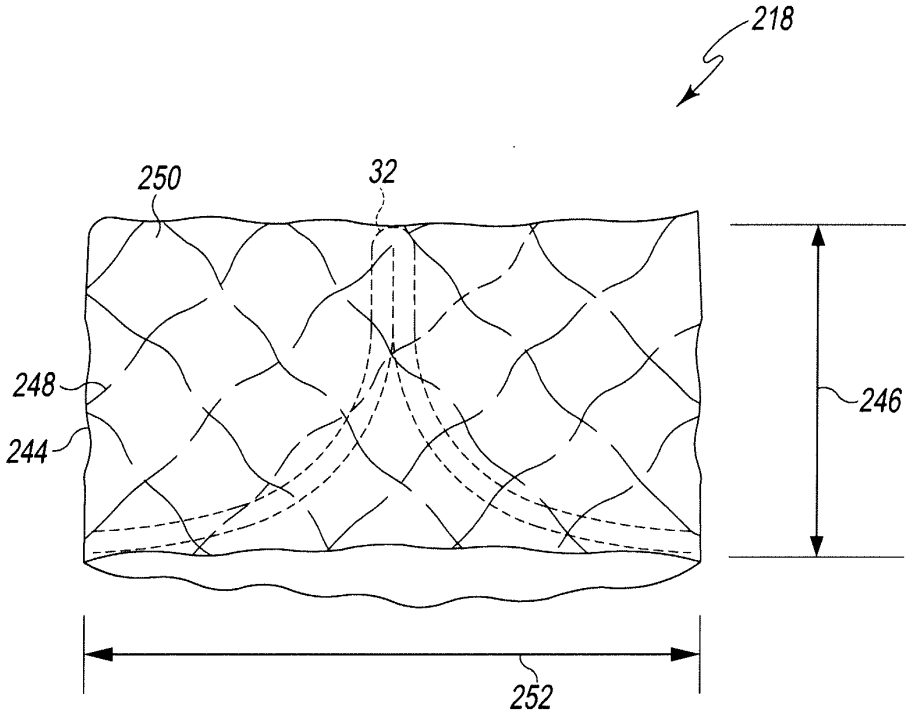

Fig. 10

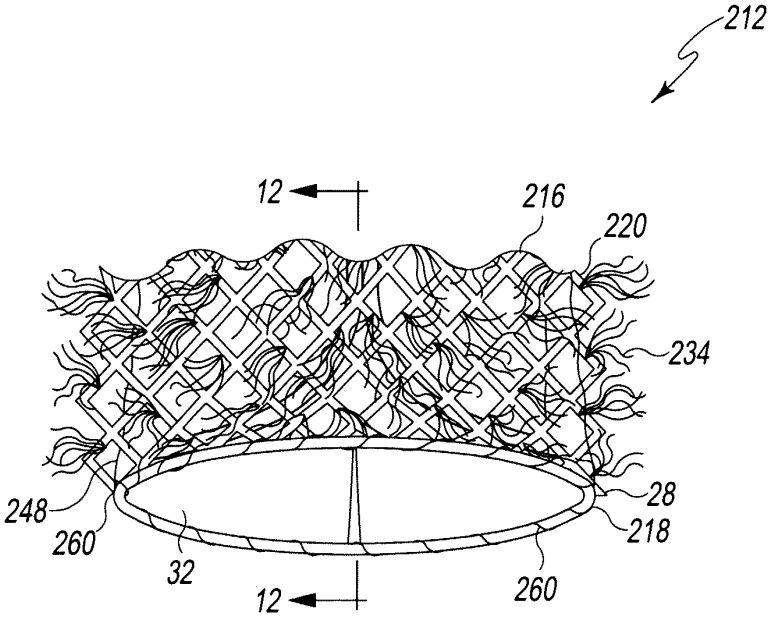

Fig. 11

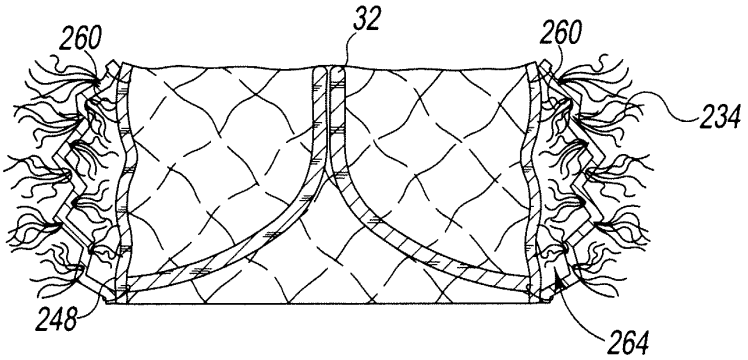

Fig. 12

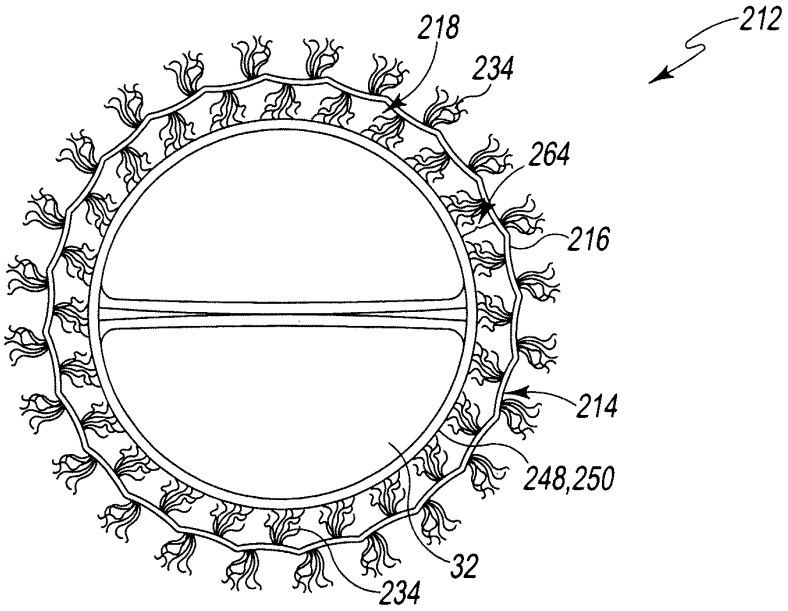
212
218
234
264
216
214
248,250
32
234

Fig. 13

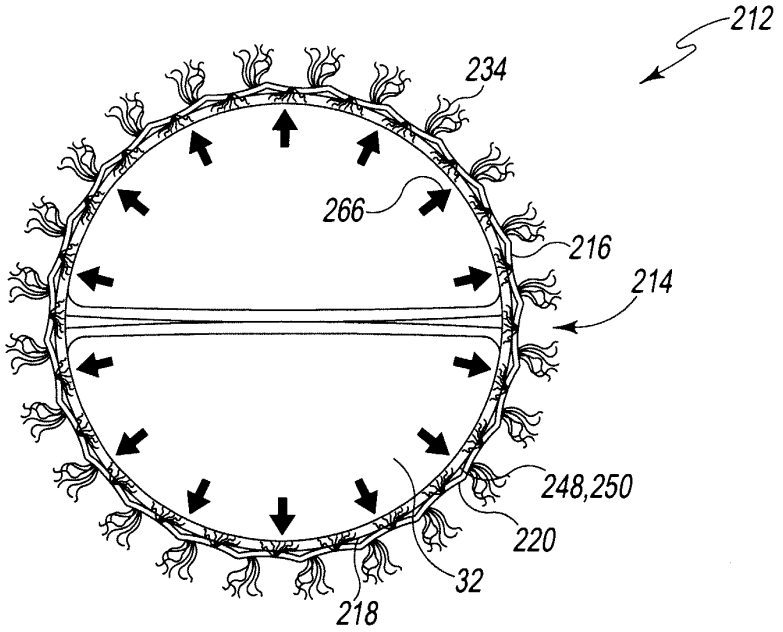
212
234
266
216
214
248,250
220
32
218

Fig. 14

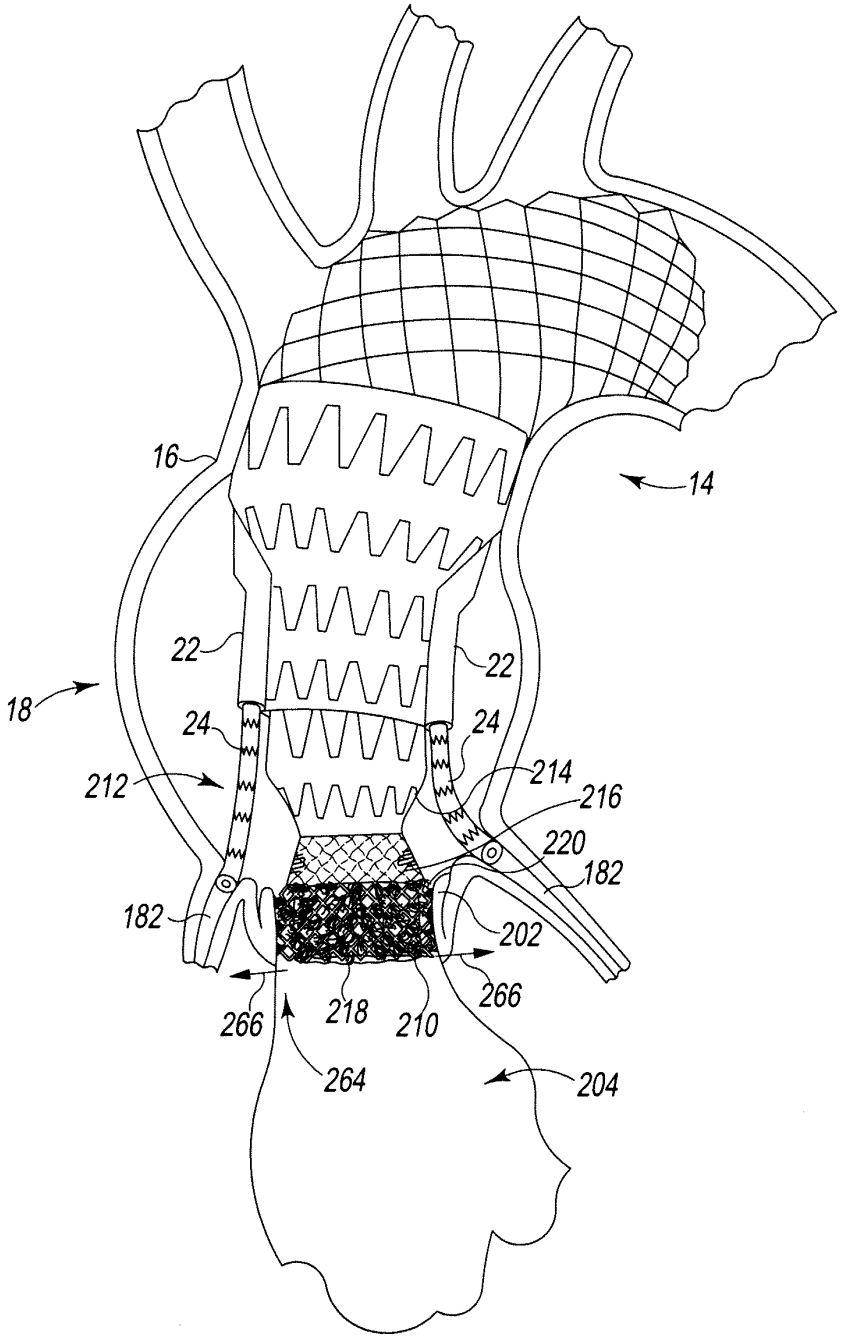
16
14
22
22
18
24
24
212
214
216
220
182
182
202
266
266
218
210
264
204

Fig. 15

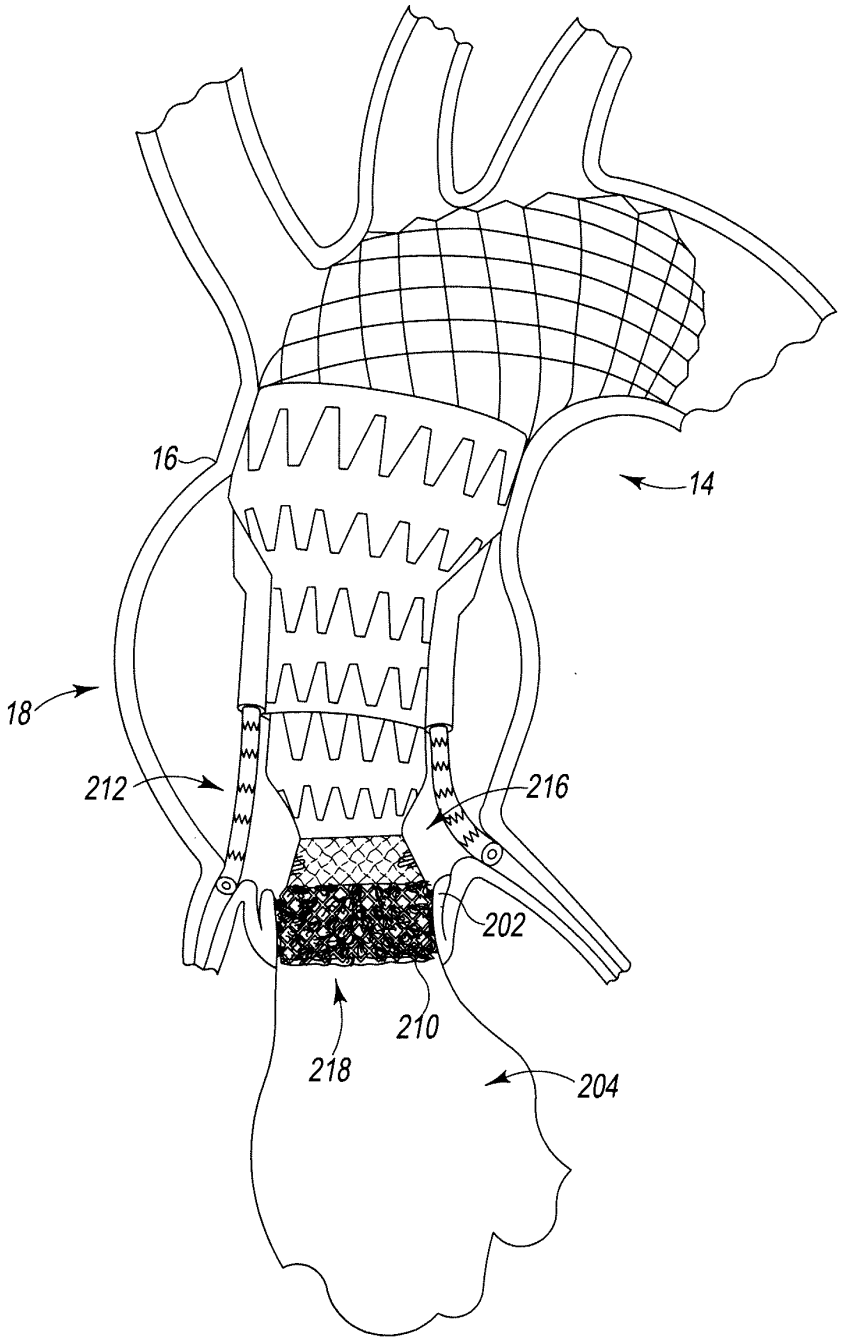

Fig. 16

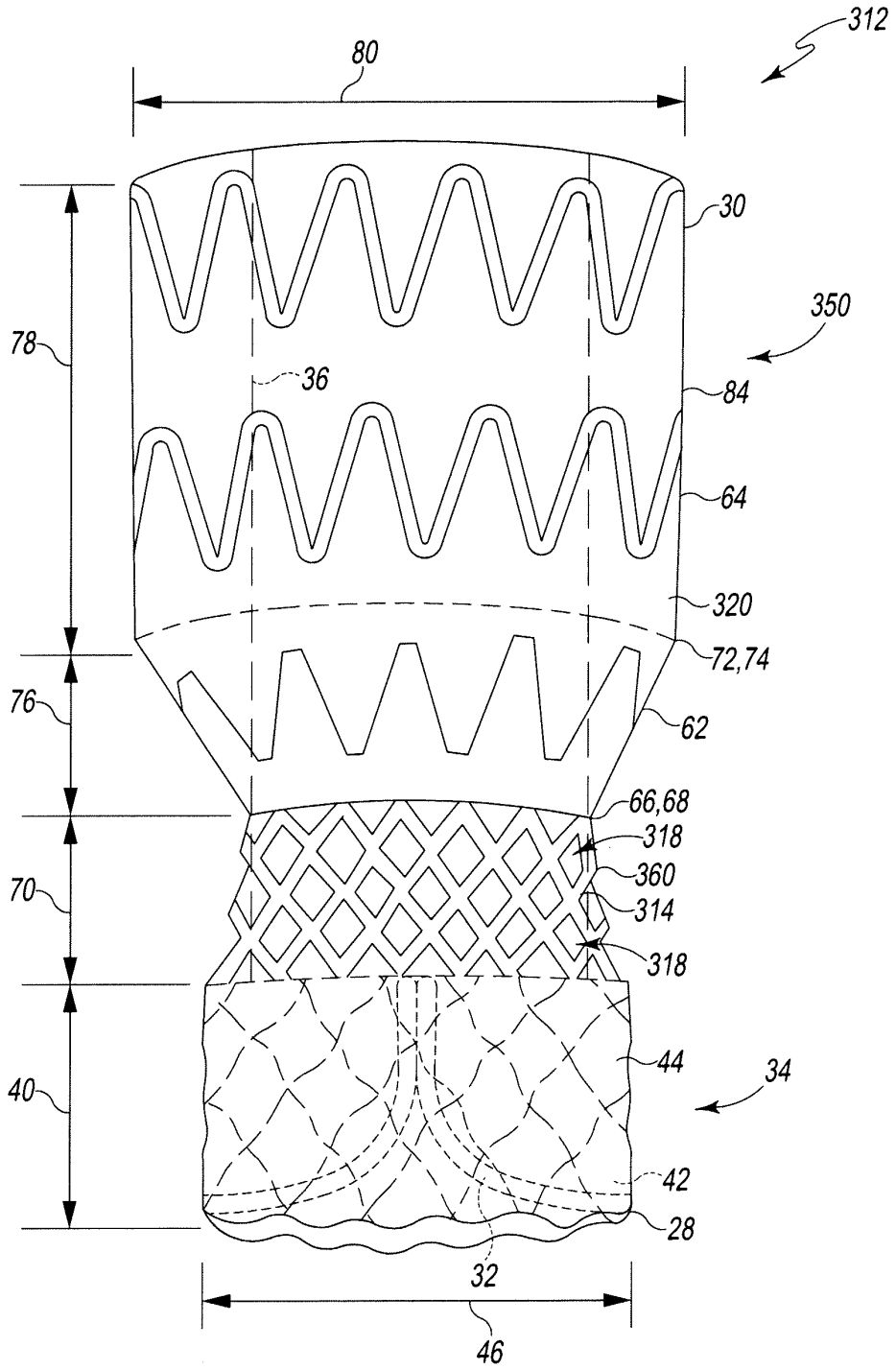
312
80
30
350
78
36
84
64
320
72,74
76
62
66,68
318
360
70
314
318
44
34
40
42
28
32
46

Fig. 17

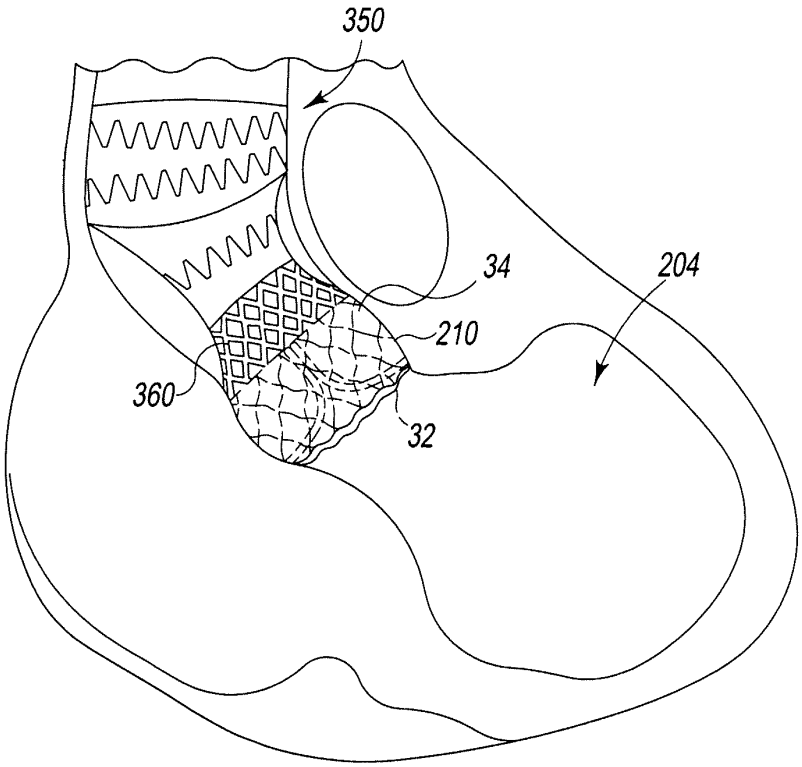

Fig. 18

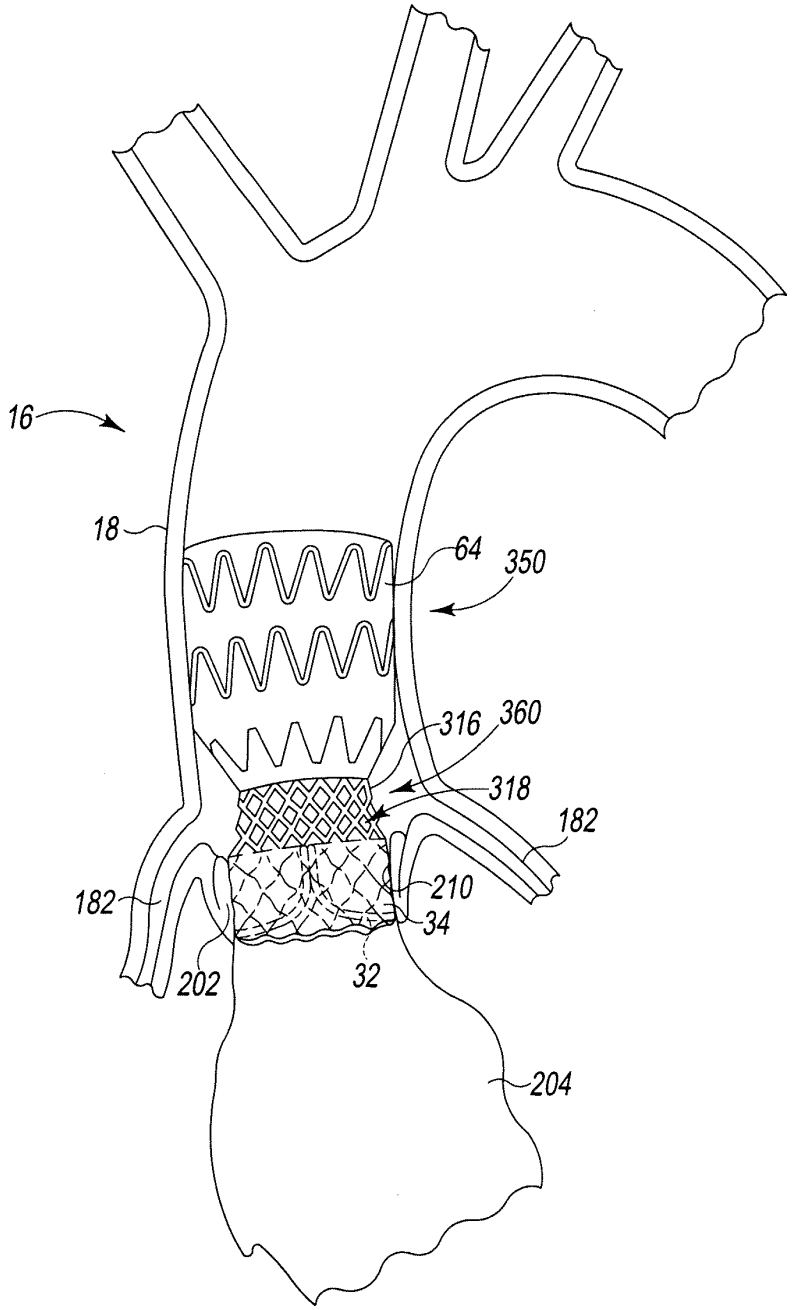

Fig. 19

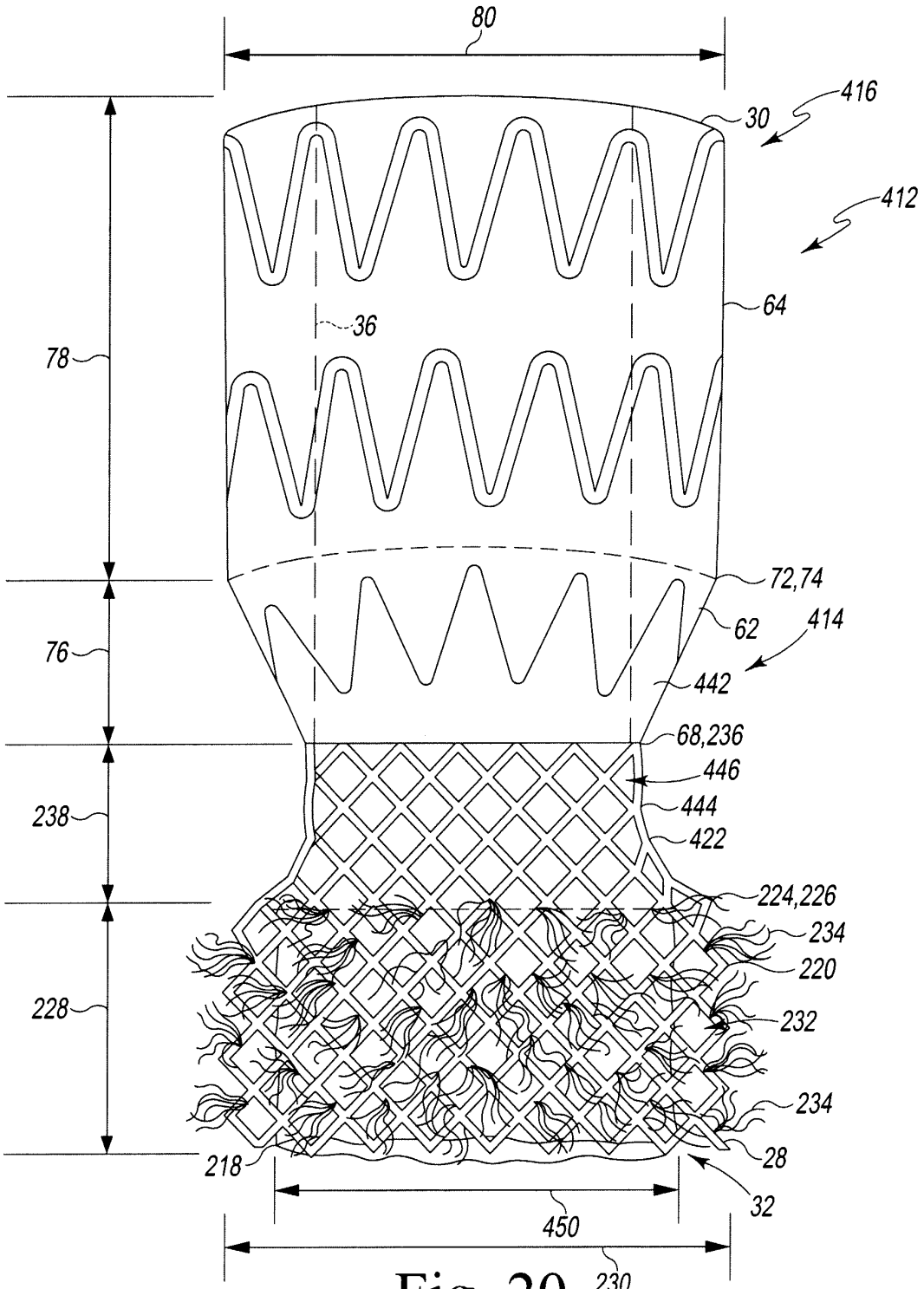
80
416
30
412
64
36
78
72,74
62
414
76
442
68,236
446
238
444
422
224,226
234
220
228
232
234
218
28
32
450
230

Fig. 20

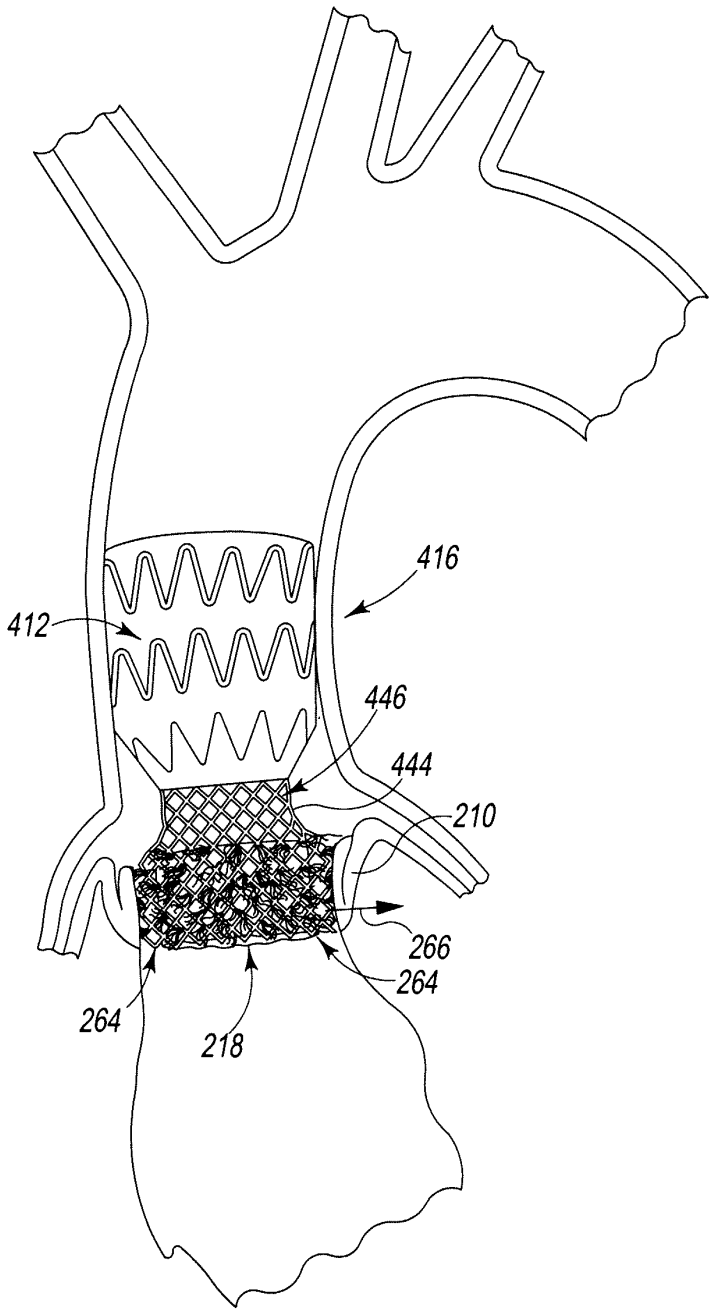

Fig. 21

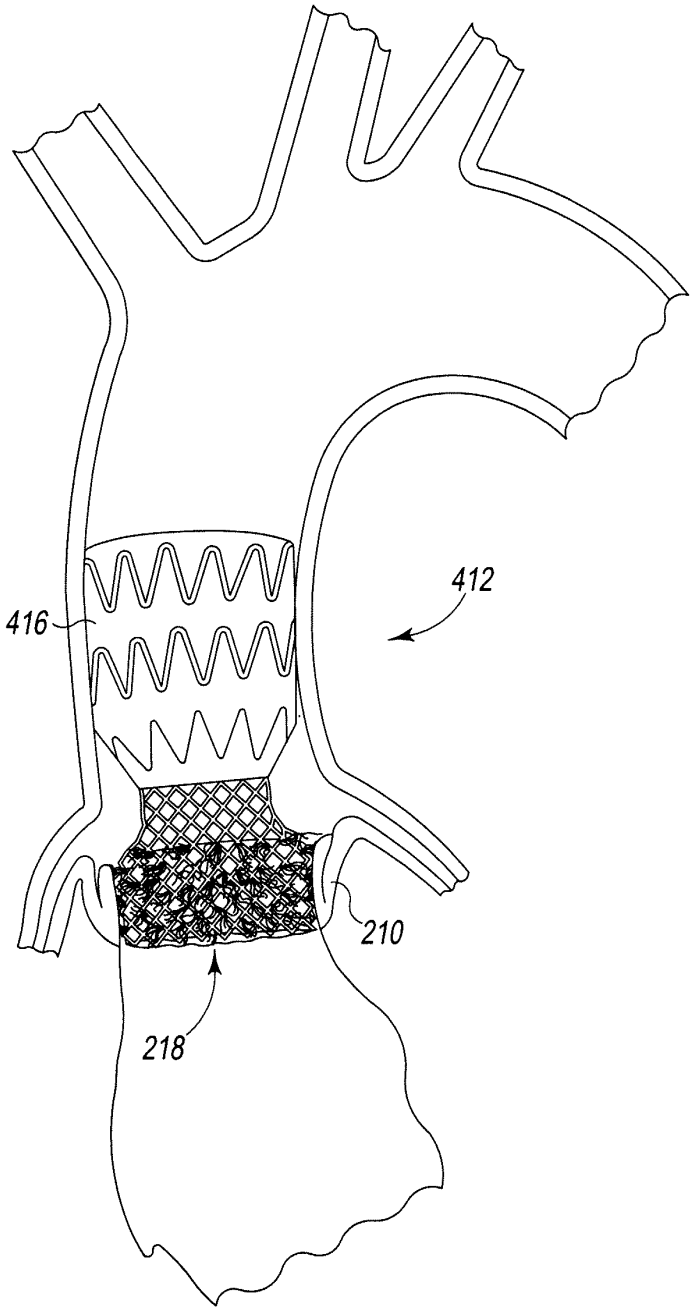

Fig. 22

PTO/AIA/01 (06-12)
Approved for use through 01/31/2014. OMB 0651-0032
U.S. Patent and Trademark Office; U.S. DEPARTMENT OF COMMERCE
Under the Paperwork Reduction Act of 1995, no persons are required to respond to a collection of information unless it displays a valid OMB control number.

DECLARATION (37 CFR 1.63) FOR UTILITY OR DESIGN APPLICATION USING AN APPLICATION DATA SHEET (37 CFR 1.76)

Title of Invention	DEVICE FOR ENDOVASCULAR AORTIC REPAIR AND METHOD OF USING THE SAME

As the below named inventor, I hereby declare that:

This declaration is directed to:

- [x] The attached application, or
- [ ] United States application or PCT international application number _____

filed on _____.

The above-identified application was made or authorized to be made by me.

I believe that I am the original inventor or an original joint inventor of a claimed invention in the application.

I hereby acknowledge that any willful false statement made in this declaration is punishable under 18 U.S.C. 1001 by fine or imprisonment of not more than five (5) years, or both.

WARNING:

Petitioner/applicant is cautioned to avoid submitting personal information in documents filed in a patent application that may contribute to identity theft. Personal information such as social security numbers, bank account numbers, or credit card numbers (other than a check or credit card authorization form PTO-2038 submitted for payment purposes) is never required by the USPTO to support a petition or an application. If this type of personal information is included in documents submitted to the USPTO, petitioners/applicants should consider redacting such personal information from the documents before submitting them to the USPTO. Petitioner/applicant is advised that the record of a patent application is available to the public after publication of the application (unless a non-publication request in compliance with 37 CFR 1.213(a) is made in the application) or issuance of a patent. Furthermore, the record from an abandoned application may also be available to the public if the application is referenced in a published application or an issued patent (see 37 CFR 1.14). Checks and credit card authorization forms PTO-2038 submitted for payment purposes are not retained in the application file and therefore are not publicly available.

LEGAL NAME OF INVENTOR

Inventor: Ali SHAHRIARI Date (Optional): 12/5/12

Signature: A. Shah

Note: An application data sheet (PTO/SB/14 or equivalent), including naming the entire inventive entity, must accompany this form or must have been previously filed. Use an additional PTO/AIA/01 form for each additional inventor.

This collection of information is required by 35 U.S.C. 115 and 37 CFR 1.63. The information is required to obtain or retain a benefit by the public which is to file (and by the USPTO to process) an application. Confidentiality is governed by 35 U.S.C. 122 and 37 CFR 1.11 and 1.14. This collection is estimated to take 1 minute to complete, including gathering, preparing, and submitting the completed application form to the USPTO. Time will vary depending upon the individual case. Any comments on the amount of time you require to complete this form and/or suggestions for reducing this burden, should be sent to the Chief Information Officer, U.S. Patent and Trademark Office, U.S. Department of Commerce, P.O. Box 1450, Alexandria, VA 22313-1450. DO NOT SEND FEES OR COMPLETED FORMS TO THIS ADDRESS. **SEND TO: Commissioner for Patents, P.O. Box 1450, Alexandria, VA 22313-1450.**

If you need assistance in completing the form, call 1-800-PTO-9199 and select option 2.

Electronic Patent Application Fee Transmittal

Application Number:	
Filing Date:	
Title of Invention:	DEVICE FOR ENDOVASCULAR AORTIC REPAIR AND METHOD OF USING THE SAME
First Named Inventor/Applicant Name:	Ali Shahriari
Filer:	Justin Robert Nifong/Donna Donovan
Attorney Docket Number:	426/2/9 UTIL

Filed as Small Entity

Filing Fees for Track I Prioritized Examination - Nonprovisional Application under 35 USC 111(a)

Description	Fee Code	Quantity	Amount	Sub-Total in USD($)
Basic Filing:				
UTILITY FILING FEE (ELECTRONIC FILING)	4011	1	75	75
UTILITY SEARCH FEE	2111	1	330	330
UTILITY EXAMINATION FEE	2311	1	380	380
REQUEST FOR PRIORITIZED EXAMINATION	2817	1	2000	2000
Pages:				
Claims:				
Miscellaneous-Filing:				

Description	Fee Code	Quantity	Amount	Sub-Total in USD($)
PUBL. FEE- EARLY, VOLUNTARY, OR NORMAL	1504	1	0	0
PROCESSING FEE, EXCEPT PROV. APPLS.	2830	1	70	70
Petition:				
Patent-Appeals-and-Interference:				
Post-Allowance-and-Post-Issuance:				
Extension-of-Time:				
Miscellaneous:				
			Total in USD ($)	**2855**

Electronic Acknowledgement Receipt	
EFS ID:	38759621
Application Number:	16808137
International Application Number:	
Confirmation Number:	1706
Title of Invention:	DEVICE FOR ENDOVASCULAR AORTIC REPAIR AND METHOD OF USING THE SAME
First Named Inventor/Applicant Name:	Ali Shahriari
Customer Number:	115007
Filer:	Justin Robert Nifong/Donna Donovan
Filer Authorized By:	Justin Robert Nifong
Attorney Docket Number:	426/2/9 UTIL
Receipt Date:	03-MAR-2020
Filing Date:	
Time Stamp:	18:07:55
Application Type:	Utility under 35 USC 111(a)

Payment information:

Submitted with Payment	yes
Payment Type	CARD
Payment was successfully received in RAM	$2855
RAM confirmation Number	E202033I08339979
Deposit Account	506191
Authorized User	Donna Donovan
The Director of the USPTO is hereby authorized to charge indicated fees and credit any overpayment as follows: 37 CFR 1.16 (National application filing, search, and examination fees) 37 CFR 1.17 (Patent application and reexamination processing fees)	

37 CFR 1.19 (Document supply fees)

37 CFR 1.20 (Post Issuance fees)

37 CFR 1.21 (Miscellaneous fees and charges)

File Listing:

Document Number	Document Description	File Name	File Size(Bytes)/ Message Digest	Multi Part /.zip	Pages (if appl.)
1	TrackOne Request	426-2-9-UTIL-20200303-TrackOneRequest.pdf	114483 09f8e3ade064089c383963c689120ae85583ddcb	no	2
Warnings:					
Information:					
2	Application Data Sheet	426-2-9UTIL-2020303-ADS.pdf	1256559 896a9ff4e980c3f874d284b469ad411df1d18fa5	no	9
Warnings:					
Information:					
3		426-2-9-UTIL-20200303-Spec-claims-abs.pdf	179505 11ba78f76fca6c4f2361702ffcc08964a3e03eb4	yes	41

Multipart Description/PDF files in .zip description

Document Description	Start	End
Specification	1	38
Claims	39	40
Abstract	41	41

Warnings:					
Information:					
4	Drawings-other than black and white line drawings	426-2-9UTIL-20200303-Drwgs.pdf	1457076 cab92a5b083477cf9962288f05bdfd951c8b7611	no	19
Warnings:					
Information:					
5	Oath or Declaration filed	426-2-9UTIL-20200303-Dec-signed.pdf	71634 e71f1f585ee4c06b6ea2e9bc49ff74d04ad8bcfa	no	1

Warnings:					
Information:					
6	Fee Worksheet (SB06)	fee-info.pdf	40492 55ce93f8b335309338ce2c173054df717957edc1	no	2
Warnings:					
Information:					
		Total Files Size (in bytes):	3119749		

This Acknowledgement Receipt evidences receipt on the noted date by the USPTO of the indicated documents, characterized by the applicant, and including page counts, where applicable. It serves as evidence of receipt similar to a Post Card, as described in MPEP 503.

New Applications Under 35 U.S.C. 111
If a new application is being filed and the application includes the necessary components for a filing date (see 37 CFR 1.53(b)-(d) and MPEP 506), a Filing Receipt (37 CFR 1.54) will be issued in due course and the date shown on this Acknowledgement Receipt will establish the filing date of the application.
National Stage of an International Application under 35 U.S.C. 371
If a timely submission to enter the national stage of an international application is compliant with the conditions of 35 U.S.C. 371 and other applicable requirements a Form PCT/DO/EO/903 indicating acceptance of the application as a national stage submission under 35 U.S.C. 371 will be issued in addition to the Filing Receipt, in due course.
New International Application Filed with the USPTO as a Receiving Office
If a new international application is being filed and the international application includes the necessary components for an international filing date (see PCT Article 11 and MPEP 1810), a Notification of the International Application Number and of the International Filing Date (Form PCT/RO/105) will be issued in due course, subject to prescriptions concerning national security, and the date shown on this Acknowledgement Receipt will establish the international filing date of the application.