US007524331B2

(12) **United States Patent**
Birdsall

(10) **Patent No.: US 7,524,331 B2**
(45) **Date of Patent: Apr. 28, 2009**

(54) **CATHETER DELIVERED VALVE HAVING A BARRIER TO PROVIDE AN ENHANCED SEAL**

(75) Inventor: **Matthew J. Birdsall**, Santa Rosa, CA (US)

(73) Assignee: **Medtronic Vascular, Inc.**, Santa Rosa, CA (US)

(*) Notice: Subject to any disclaimer, the term of this patent is extended or adjusted under 35 U.S.C. 154(b) by 373 days.

(21) Appl. No.: **11/278,925**

(22) Filed: **Apr. 6, 2006**

(65) **Prior Publication Data**

US 2007/0239265 A1 Oct. 11, 2007

(51) **Int. Cl.**
A61F 2/06 (2006.01)

(52) **U.S. Cl.** **623/2.11**; 623/1.24

(58) **Field of Classification Search** 623/1.24, 623/2.1–2.19

See application file for complete search history.

(56) **References Cited**

U.S. PATENT DOCUMENTS

3,334,629	A	8/1967	Cohn
3,540,431	A	11/1970	Mobin-Uddin
3,628,535	A	12/1971	Ostrowsky et al.
3,642,004	A	2/1972	Osthagen et al.
3,657,744	A	4/1972	Esek
3,671,979	A	6/1972	Moulopoulos
3,795,246	A	3/1974	Sturgeon
3,839,741	A	10/1974	Haller
3,868,956	A	3/1975	Alfidi et al.
3,874,388	A	4/1975	King et al.
4,056,854	A	11/1977	Boretos et al.
4,106,129	A	8/1978	Carpentier et al.
4,233,690	A	11/1980	Akins
4,291,420	A	9/1981	Reul
4,425,908	A	1/1984	Simon
4,501,030	A	2/1985	Lane
4,580,568	A	4/1986	Gianturco
4,610,688	A	9/1986	Silvestrini et al.
4,647,283	A	3/1987	Carpentier et al.
4,648,881	A	3/1987	Carpentier et al.
4,655,771	A	4/1987	Wallsten
4,662,885	A	5/1987	DiPisa, Jr.
4,665,906	A	5/1987	Jervis

(Continued)

FOREIGN PATENT DOCUMENTS

EP	1057459	2/2000

(Continued)

OTHER PUBLICATIONS

P. Bonhoeffer, MD, et al., "Transcatheter Implantation of a Bovine Valve in a Pulmonary Position—A Lamb Study," pp. 8-3-816; Aug. 2000.

(Continued)

Primary Examiner—Suzette J Gherbi

(57) **ABSTRACT**

A system for treating abnormalities of the right ventricular outflow tract includes a prosthetic valve device having a barrier material contacting at least a portion of the outer surface of the valve device. One embodiment of the invention includes a barrier member attached to the exterior surface of the valve device. Another embodiment includes a barrier material that is injected within the vascular system. Yet another embodiment of the invention includes a method for replacing a pulmonary valve that includes forming a barrier around the outer surface of a replacement valve and preventing blood flow around the replacement valve.

12 Claims, 6 Drawing Sheets

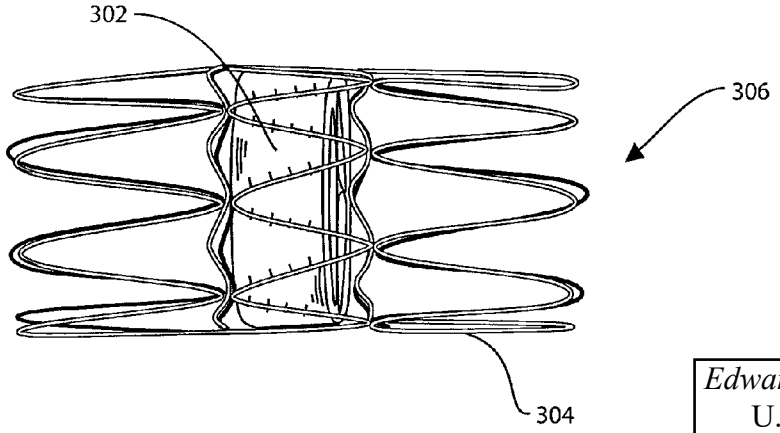

Edwards v. Aortic Innovations
U.S. Patent 11,337,834
Edwards Ex. 1057

U.S. PATENT DOCUMENTS

4,710,192	A	12/1987	Liotta et al.	
4,733,665	A	3/1988	Palmaz	
4,819,751	A	4/1989	Shimada et al.	
4,834,755	A	5/1989	Silverstrini et al.	
4,856,516	A	8/1989	Hillstead	
4,872,874	A	10/1989	Taheri	
4,909,252	A	3/1990	Goldberger	
4,917,102	A	4/1990	Miller et al.	
4,954,126	A	9/1990	Wallsten	
4,994,077	A	2/1991	Dobben	
5,002,559	A	3/1991	Tower	
5,156,621	A	10/1992	Navia et al.	
5,161,547	A	11/1992	Tower	
5,163,953	A	11/1992	Vince	
5,197,979	A	3/1993	Quintero et al.	
5,217,483	A	6/1993	Tower	
5,332,402	A	7/1994	Teitelbaum et al.	
5,336,258	A	8/1994	Quintero et al.	
5,350,398	A	9/1994	Pavcnik et al.	
5,370,685	A	12/1994	Stevens	
5,389,106	A	2/1995	Tower	
5,397,351	A	3/1995	Pavcnik et al.	
5,411,552	A	5/1995	Andersen et al.	
5,431,676	A	7/1995	Dubrul et al.	
5,507,767	A	4/1996	Maeda et al.	
5,545,211	A	8/1996	An et al.	
5,554,185	A	9/1996	Block et al.	
5,575,818	A	11/1996	Pinchuk	
5,645,559	A	7/1997	Hachtman et al.	
5,667,523	A	9/1997	Bynon et al.	
5,674,277	A	10/1997	Freitag	
5,693,085	A *	12/1997	Buirge et al.	623/1.13
5,695,498	A	12/1997	Tower	
5,713,953	A	2/1998	Vallana et al.	
5,800,456	A	9/1998	Maeda et al.	
5,817,126	A	10/1998	Imran	
5,824,043	A	10/1998	Cottone, Jr.	
5,824,053	A	10/1998	Khosravi et al.	
5,824,056	A	10/1998	Rosenberg	
5,824,064	A	10/1998	Taheri	
5,840,081	A	11/1998	Andersen et al.	
5,855,597	A	1/1999	Jayaraman	
5,855,601	A	1/1999	Bessler et al.	
5,860,996	A	1/1999	Tower	
5,861,028	A	1/1999	Angell	
5,868,783	A	2/1999	Tower	
5,876,448	A	3/1999	Thompson et al.	
5,888,201	A	3/1999	Stinson et al.	
5,891,191	A	4/1999	Stinson	
5,907,893	A	6/1999	Zadno-Azizi et al.	
5,925,063	A	7/1999	Khosravi	
5,944,738	A	8/1999	Amplatz et al.	
5,954,766	A	9/1999	Zadno-Aziz et al.	
5,957,949	A	9/1999	Leonhardt et al.	
5,984,957	A	11/1999	Laptewicz, Jr. et al.	
6,001,126	A	12/1999	Nguyen-Thien-Nhon	
6,027,525	A	2/2000	Suh et al.	
6,042,598	A	3/2000	Tsugita et al.	
6,051,014	A	4/2000	Jang	
6,123,723	A	9/2000	Konya et al.	
6,146,366	A	11/2000	Schachar	
6,162,245	A	12/2000	Jayaraman	
6,168,614	B1	1/2001	Andersen et al.	
6,200,336	B1	3/2001	Pavcnik et al.	
6,221,006	B1	4/2001	Dubrul et al.	
6,221,091	B1	4/2001	Khosravi	
6,241,757	B1	6/2001	An et al.	
6,254,436	B1	7/2001	Nitta et al.	
6,258,114	B1	7/2001	Konya et al.	
6,258,115	B1	7/2001	Dubrul et al.	
6,258,120	B1	7/2001	McKenzie et al.	
6,277,555	B1	8/2001	Duran et al.	
6,309,417	B1	10/2001	Spence et al.	
6,327,772	B1	12/2001	Zadno-Aziz et al.	
6,338,735	B1	1/2002	Stevens	
6,342,070	B1	1/2002	Nguyen-Thien-Nhon	
6,348,063	B1	2/2002	Yassour et al.	
6,350,282	B1	2/2002	Eberhardt	
6,352,708	B1	3/2002	Duran et al.	
6,364,905	B1	4/2002	Simpson et al.	
6,371,970	B1	4/2002	Khosravi et al.	
6,371,983	B1	4/2002	Lane	
6,379,383	B1	4/2002	Palmaz et al.	
6,398,807	B1	6/2002	Chouinard et al.	
6,409,750	B1	6/2002	Hyodoh et al.	
6,425,916	B1	7/2002	Garrison et al.	
6,440,164	B1	8/2002	DiMatteo et al.	
6,458,153	B1	10/2002	Bailey et al.	
6,468,303	B1	10/2002	Amplatz et al.	
6,475,239	B1	11/2002	Campbell	
6,482,228	B1	11/2002	Norred	
6,494,909	B2	12/2002	Greenhalgh	
6,503,272	B2	1/2003	Duerig et al.	
6,508,833	B2	1/2003	Pavcnik et al.	
6,509,930	B1	1/2003	Hirano et al.	
6,527,800	B1	3/2003	McGuckin, Jr. et al.	
6,530,949	B2	3/2003	Konya et al.	
6,530,952	B2	3/2003	Vesely	
6,558,417	B2	5/2003	Peredo	
6,562,058	B2	5/2003	Seguin et al.	
6,569,196	B1	5/2003	Vesely	
6,592,546	B1	7/2003	Barbut et al.	
6,622,604	B1	9/2003	Chouinard et al.	
6,632,243	B1	10/2003	Zadno-Azizi et al.	
6,635,068	B1	10/2003	Dubrul et al.	
6,652,571	B1	11/2003	White et al.	
6,652,578	B2	11/2003	Bailey et al.	
6,663,663	B2	12/2003	Kim et al.	
6,669,724	B2	12/2003	Park et al.	
6,673,089	B1	1/2004	Yassour et al.	
6,673,109	B2	1/2004	Cox	
6,682,558	B2	1/2004	Tu et al.	
6,682,559	B2	1/2004	Myers et al.	
6,685,739	B2	2/2004	DiMatteo et al.	
6,689,144	B2	2/2004	Gerberding	
6,689,164	B1	2/2004	Seguin	
6,692,512	B2	2/2004	Jang	
6,702,851	B1	3/2004	Chinn et al.	
6,719,789	B2	4/2004	Cox	
6,730,118	B2	5/2004	Spenser et al.	
6,730,377	B2	5/2004	Wang	
6,733,525	B2	5/2004	Uamg et al.	
6,736,846	B2	5/2004	Cox	
6,752,828	B2	6/2004	Thornton	
6,758,855	B2	7/2004	Fulton, III et al.	
6,769,434	B2	8/2004	Streeter at et al.	
6,887,266	B2	5/2005	Williams et al.	
6,890,330	B2	5/2005	Streeter et al.	
6,896,690	B1	5/2005	Lambrecht et al.	
6,929,653	B2	8/2005	Streeter	
7,270,675	B2 *	9/2007	Chun et al.	623/1.15
2001/0007956	A1	7/2001	Letac et al.	
2001/0025196	A1	9/2001	Chinn et al.	
2001/0032013	A1	10/2001	Marton	
2001/0039450	A1	11/2001	Pavcnik et al.	
2001/0041928	A1	11/2001	Pavcnik et al.	
2002/0032480	A1	3/2002	Spence et al.	
2002/0032481	A1	3/2002	Gabbay	
2002/0052651	A1	5/2002	Myers et al.	
2002/0058995	A1	5/2002	Stevens	
2002/0077696	A1	6/2002	Zadno-Azizi et al.	
2002/0095209	A1	7/2002	Zadno-Azizi et al.	
2002/0111674	A1	8/2002	Chouinard et al.	
2002/0151970	A1	10/2002	Garrison et al.	

2002/0161392	A1	10/2002	Dubrul	
2002/0161394	A1	10/2002	Macoviak et al.	
2002/0193871	A1	12/2002	Beyersdorf et al.	
2003/0014104	A1	1/2003	Cribier	
2003/0023303	A1	1/2003	Palmaz et al.	
2003/0028247	A1	2/2003	Cali	
2003/0036791	A1	2/2003	Philipp et al.	
2003/0040771	A1	2/2003	Hyodoh et al.	
2003/0040772	A1	2/2003	Hyodoh et al.	
2003/0055495	A1	3/2003	Pease et al.	
2003/0069635	A1	4/2003	Cartledge et al.	
2003/0109924	A1	6/2003	Cribier	
2003/0125795	A1	7/2003	Pavcnik et al.	
2003/0125805	A1	7/2003	Johnson et al.	
2003/0130729	A1	7/2003	Paniagua et al.	
2003/0149475	A1	8/2003	Hyodoh et al.	
2003/0149476	A1	8/2003	Damm et al.	
2003/0149478	A1	8/2003	Figulla et al.	
2003/0153974	A1	8/2003	Spenser et al.	
2003/0181850	A1	9/2003	Diamond et al.	
2003/0199913	A1	10/2003	Dubrul et al.	
2003/0199963	A1	10/2003	Tower et al.	
2003/0199972	A1	10/2003	Zadno-Aziz et al.	
2003/0212452	A1	11/2003	Zadno-Aziz et al.	
2003/0212454	A1	11/2003	Scott et al.	
2004/0034411	A1	2/2004	Quijano et al.	
2004/0039436	A1	2/2004	Spenser et al.	
2004/0049224	A1	3/2004	Buehlmann et al.	
2004/0049262	A1	3/2004	Obermiller et al.	
2004/0049266	A1	3/2004	Anduiza et al.	
2004/0082904	A1	4/2004	Houde et al.	
2004/0088045	A1	5/2004	Cox	
2004/0098112	A1	5/2004	DiMatteo et al.	
2004/0111096	A1	6/2004	Tu et al.	
2004/0116951	A1	6/2004	Rosengart	
2004/0117004	A1	6/2004	Osborne et al.	
2004/0122468	A1	6/2004	Yodfat et al.	
2004/0127979	A1	7/2004	Wilson	
2004/0138742	A1	7/2004	Myers et al.	
2004/0138743	A1	7/2004	Myers et al.	
2004/0186563	A1	9/2004	Lobbi	
2004/0215339	A1	10/2004	Drasler et al.	
2005/0085841	A1	4/2005	Eversull et al.	
2005/0085842	A1	4/2005	Eversull et al.	
2005/0085843	A1	4/2005	Opolski et al.	
2005/0085890	A1	4/2005	Rasumssen et al.	
2005/0096692	A1	5/2005	Linder et al.	
2005/0096734	A1	5/2005	Majercak et al.	
2005/0096735	A1	5/2005	Hojeibane et al.	
2005/0096738	A1	5/2005	Cali et al.	
2005/0209065	A1	9/2005	Schlosser	
2005/0251251	A1	11/2005	Cribier	
2006/0052867	A1	3/2006	Revuelta et al.	
2006/0247762	A1*	11/2006	Acosta et al.	623/1.24

FOREIGN PATENT DOCUMENTS

EP	0937439	B1	9/2003
EP	1340473		9/2003
EP	1356793		10/2003
EP	0810913		6/2004
EP	1229864	B1	4/2005
FR	2 826 863		1/2003
WO	WO 93/15693		8/1993
WO	WO 95/04556		2/1995
WO	WO 95/29640		11/1995
WO	WO 96/14032		5/1996
WO	WO 98/36790		8/1998
WO	WO 00/09059		2/2000
WO	WO 00/44308		8/2000
WO	WO 00/44313		8/2000
WO	WO 00/67661		11/2000
WO	WO 01/05331		1/2001
WO	WO 01/35870		5/2001
WO	WO 01/64137		9/2001
WO	WO 02/36048		5/2002
WO	WO 02/100297		12/2002
WO	WO 03/003943		1/2003
WO	WO 03/003949		1/2003
WO	WO 03/011195		2/2003
WO	WO 03/015851		2/2003
WO	WO 2004/019811		3/2004
WO	WO 2004/023980		3/2004
WO	WO 2004/041126		5/2004
WO	WO 2004/047681		6/2004
WO	WO 2005/013860		2/2005

OTHER PUBLICATIONS

P. Bonhoeffer, MD et al., "Percutaneous Replacement of Pulmonary Valve in a Right-Ventricle to Pulmonary-Artery Prosthetic Conduit with Valve Dysfunction," pp. 1403-1405; Oct. 2000.

Y. Boudjemline, MD, et al., "Steps Towards Percutaneous Aortic Valve Replacement," pp. 775-778; Feb. 2002.

P. Bonhoeffer, MD, et al., "Percutaneous Insertion of the Pulmonary Valve," Journal of the American College of Cardiology, vol. 39, No. 10, pp. 1664-1669; Feb. 2002.

A Cribier, MD, et al., "Percutaneous Transcatheter Implantation of an Aortic Valve Prosthesis for Calcific Aortic Stenosis—First Human Description," pp. 3006-3008; Dec. 2002.

A. Cribier, MD, et al.; "Early Experience with Percutaneous Transcatheter Implantation of Heart Valve Prosthesis for the Treatment of End-Stage Inoperable Patients with Calcific Aortic Stenosis," Journal of the American College of Cardiology, vol. 43, No. 4, pp. 698-703; Nov. 2003.

Y. Boudjemline, MD. et al., "Percutaneous Pulmonary Valve Replacement in a Large Right Ventricular Outflow Tract," Journal of the American College of Cardiology, vol. 43, No. 6: pp. 1082-1087; Mar. 2004.

Andersen, H.R. et al, "Tran luminal implantation of artificial heart valves. Description of a new expandable aortic valve and initial results with implantation by catheter technique in closed chest pigs." Euro. Heart J. (1992) 13:704-708.

Bonhoeffer, "Percutaneous insertion of the pulmonary valve," Journal of American College of Cardiology Foundation, (2002) 39(0):1664-1669.

Iliopoulos, et al., "Repeat replacement of aortic valve bioprosthesis," Ann. Thorac Surg. (1995), 59:1217-1219.

* cited by examiner

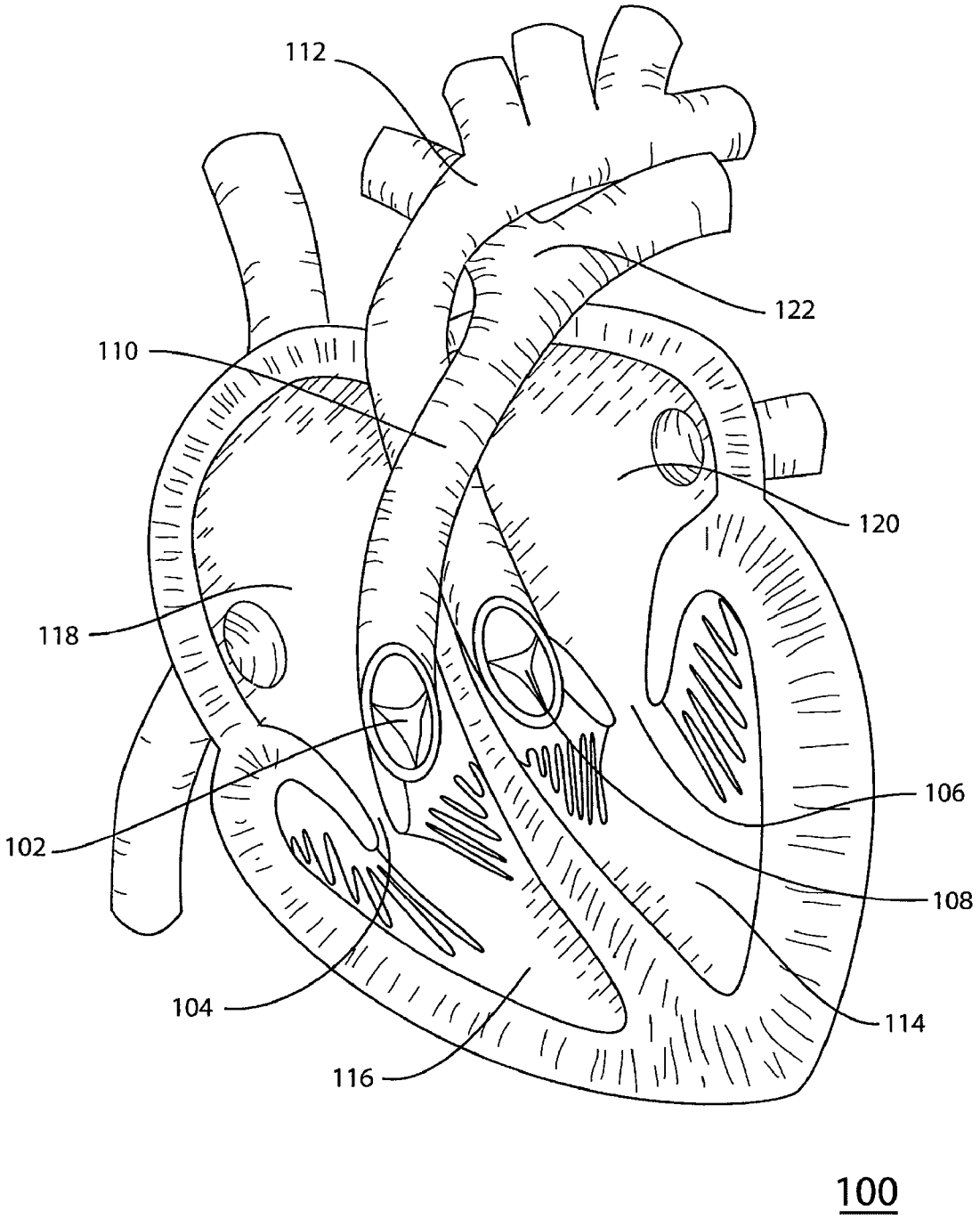

FIG. 1

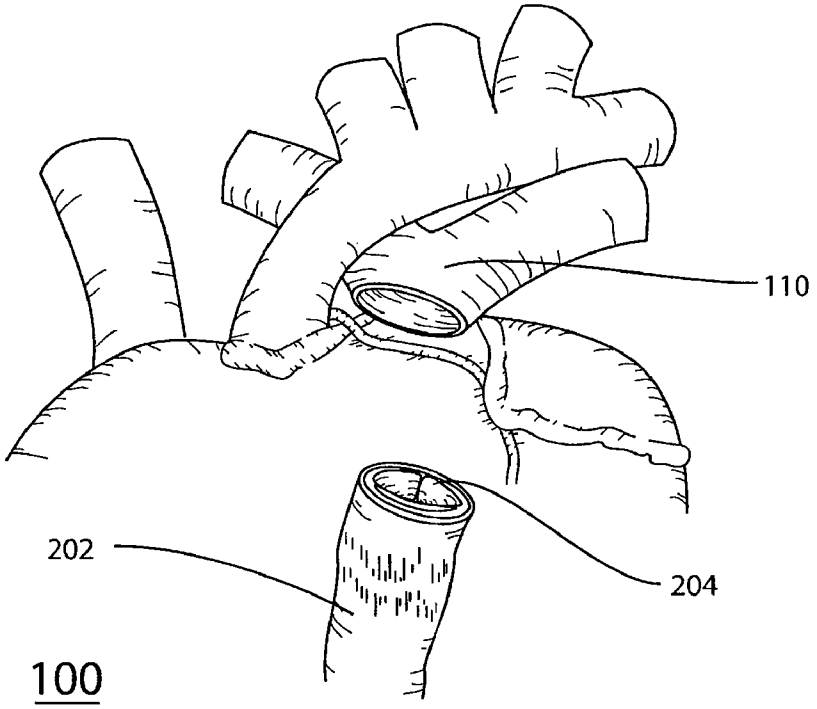

FIG. 2A

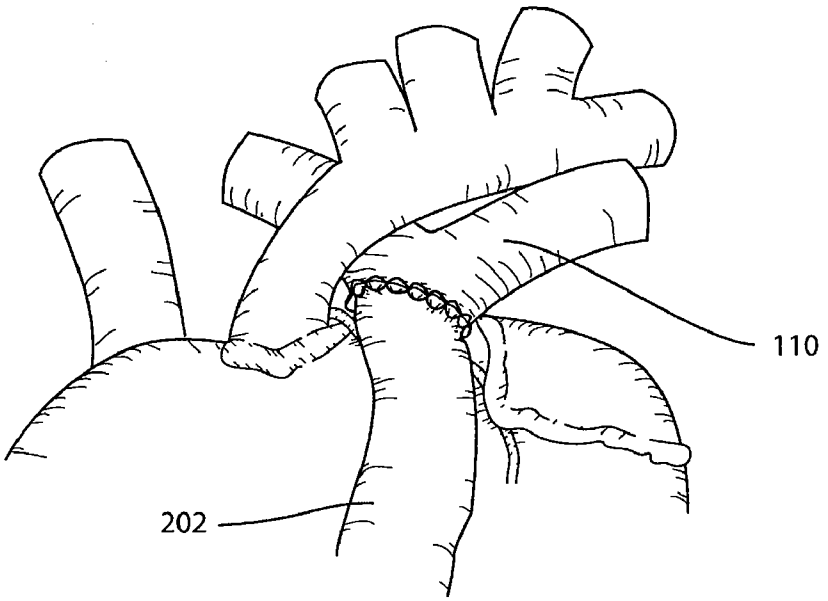

FIG. 2B

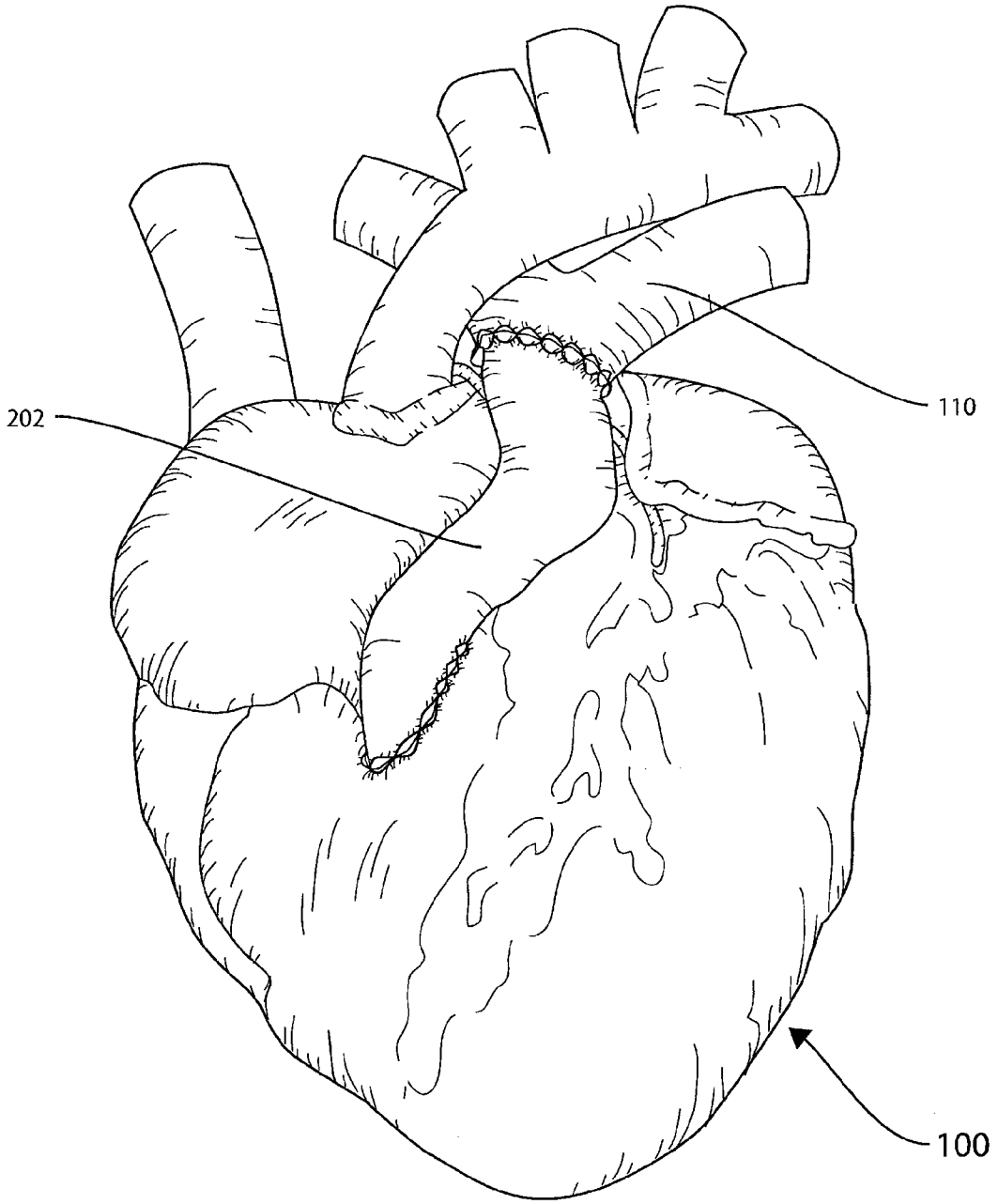

FIG. 2C

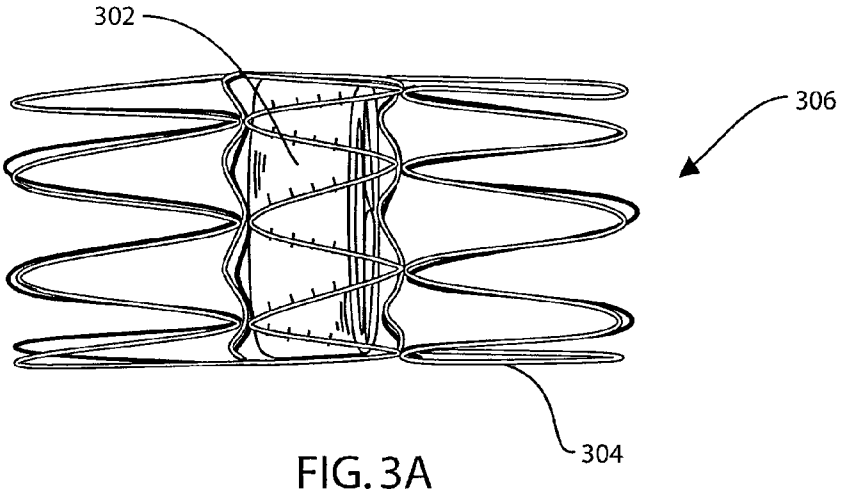

FIG. 3A

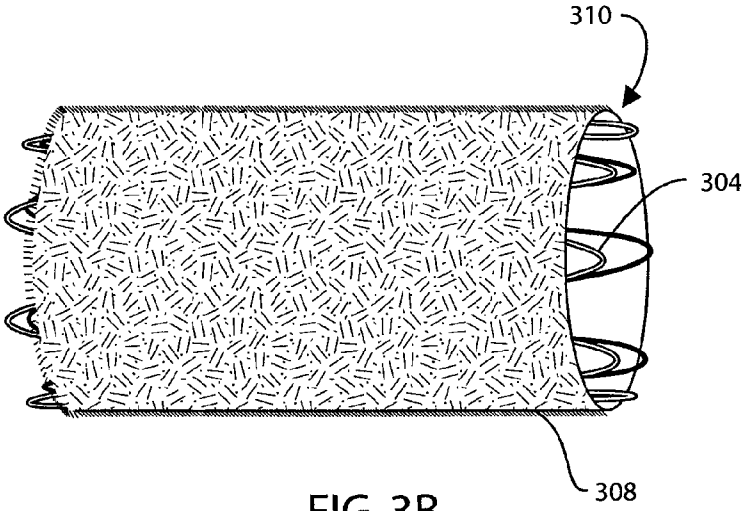

FIG. 3B

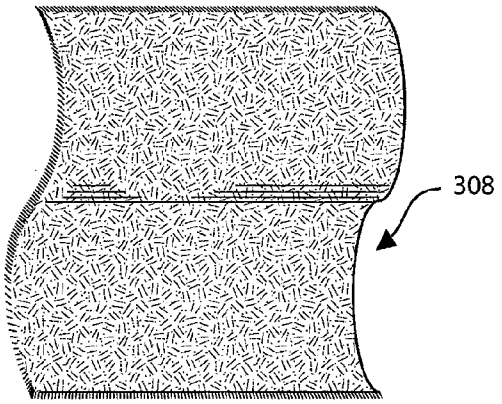

FIG. 3C

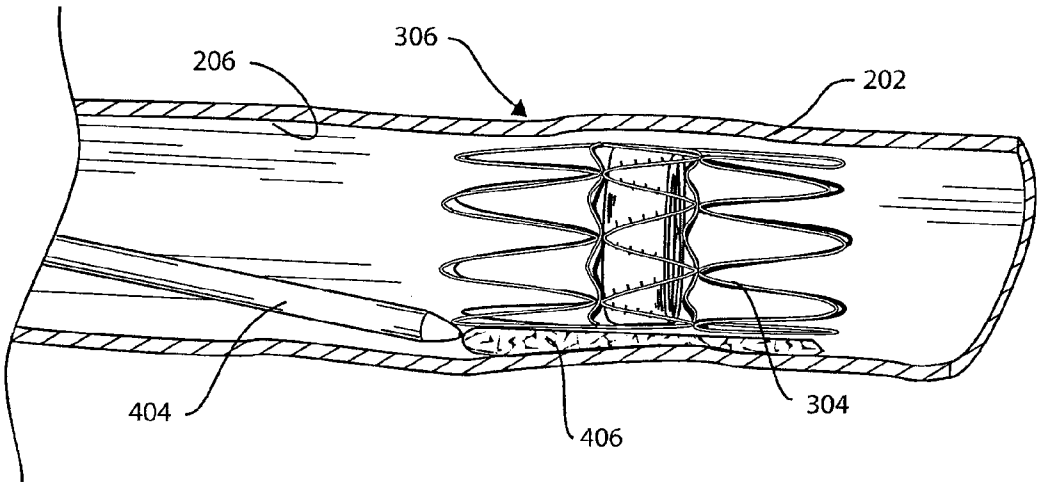

FIG. 4

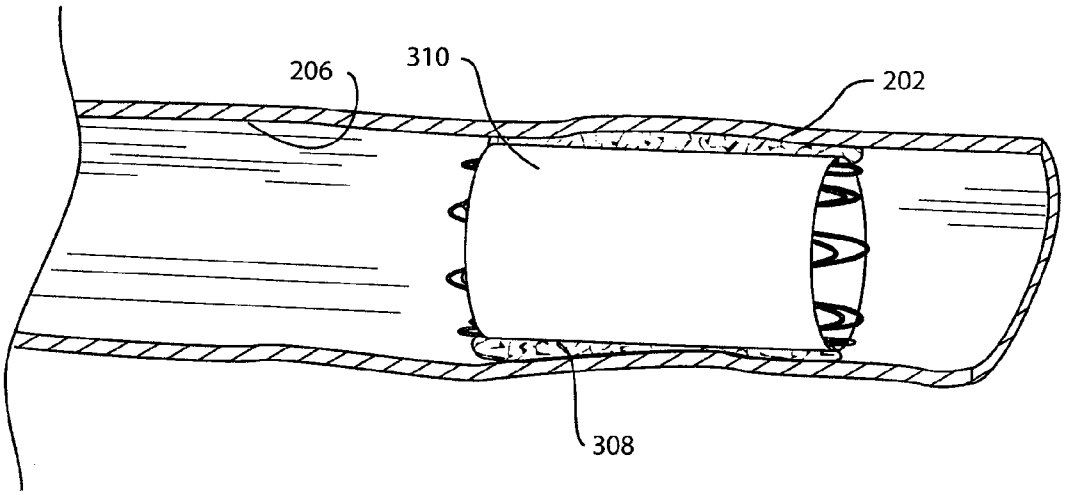

FIG. 5

FIG. 6

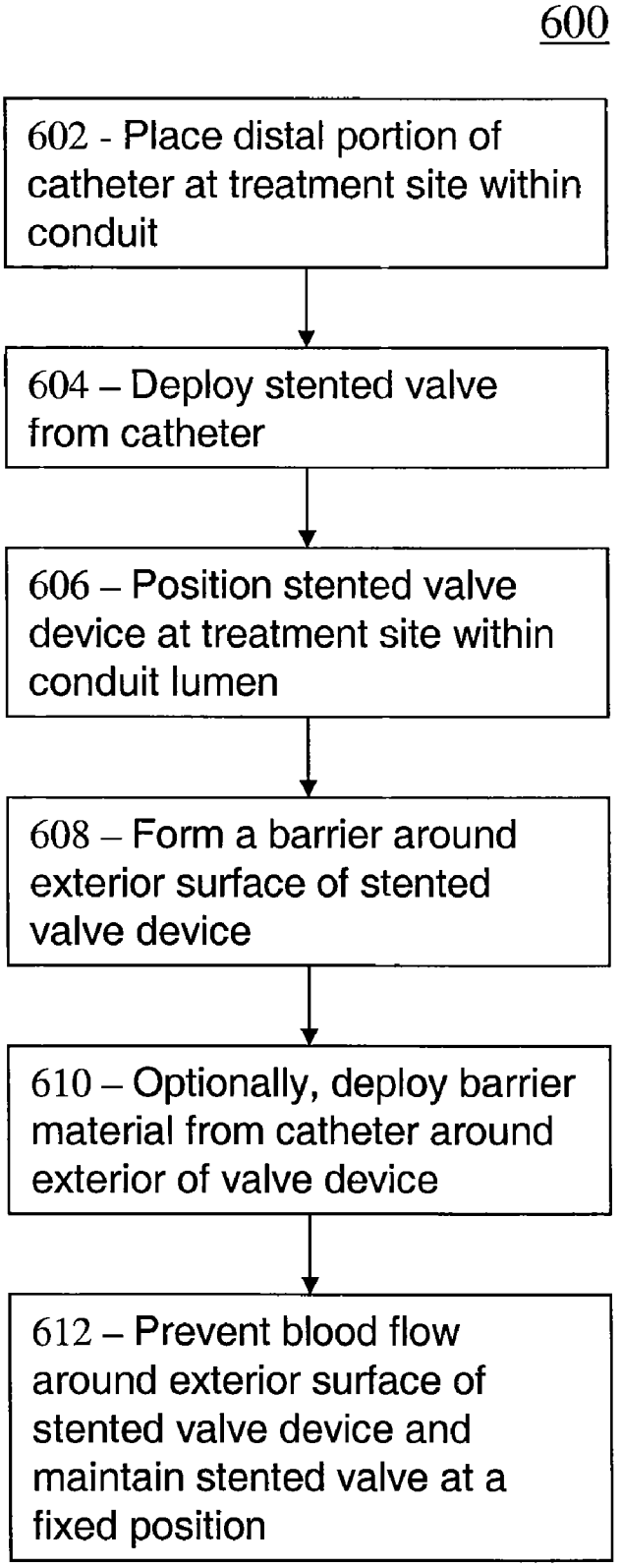
600
602 - Place distal portion of catheter at treatment site within conduit
604 – Deploy stented valve from catheter
606 – Position stented valve device at treatment site within conduit lumen
608 – Form a barrier around exterior surface of stented valve device
610 – Optionally, deploy barrier material from catheter around exterior of valve device
612 – Prevent blood flow around exterior surface of stented valve device and maintain stented valve at a fixed position

CATHETER DELIVERED VALVE HAVING A BARRIER TO PROVIDE AN ENHANCED SEAL

TECHNICAL FIELD

This invention relates generally to medical devices for treating cardiac valve abnormalities, and particularly to a pulmonary valve replacement system and method of employing the same.

BACKGROUND OF THE INVENTION

Heart valves, such as the mitral, tricuspid, aortic and pulmonary valves, are sometimes damaged by disease or by aging, resulting in problems with the proper functioning of the valve. Heart valve problems generally take one of two forms: stenosis, in which a valve does not open completely or the opening is too small, resulting in restricted blood flow; or insufficiency, in which blood leaks backward across a valve when it should be closed.

The pulmonary valve regulates blood flow between the right ventricle and the pulmonary artery, controlling blood flow between the heart and the lungs. Pulmonary valve stenosis is frequently due to a narrowing of the pulmonary valve or the pulmonary artery distal to the valve. This narrowing causes the right side of the heart to exert more pressure to provide sufficient flow to the lungs. Over time, the right ventricle enlarges, which leads to congestive heart failure (CHF). In severe cases, the CHF results in clinical symptoms including shortness of breath, fatigue, chest pain, fainting, heart murmur, and in babies, poor weight gain. Pulmonary valve stenosis most commonly results from a congenital defect, and is present at birth, but is also associated with rheumatic fever, endocarditis, and other conditions that cause damage to or scarring of the pulmonary valve. Valve replacement may be required in severe cases to restore cardiac function.

Previously, valve repair or replacement required open-heart surgery with its attendant risks, expense, and extended recovery time. Open-heart surgery also requires cardiopulmonary bypass with risk of thrombosis, stroke, and infarction. More recently, flexible valve prostheses and various delivery devices have been developed so that replacement valves can be implanted transvenously using minimally invasive techniques. As a consequence, replacement of the pulmonary valve has become a treatment option for pulmonary valve stenosis.

The most severe consequences of pulmonary valve stenosis occur in infants and young children when the condition results from a congenital defect. Frequently, the pulmonary valve must be replaced with a prosthetic valve when the child is young, usually less than five years of age. However, as the child grows, the valve can become too small to accommodate the blood flow to the lungs that is needed to meet the increasing energy demands of the growing child, and it may then need to be replaced with a larger valve. Alternatively, in a patient of any age, the implanted valve may fail to function properly due to calcium buildup and have to be replaced. In either case, repeated surgical or transvenous procedures are required.

To address the need for pulmonary valve replacement, various implantable pulmonary valve prostheses, delivery devices and surgical techniques have been developed and are presently in use. One such prosthesis is a bioprosthetic, valved conduit comprising a glutaraldehyde treated bovine jugular vein containing a natural, trileaflet venous valve, and

sinus. A similar device is composed of a porcine aortic valve sutured into the center of a woven fabric conduit. A common conduit used in valve replacement procedures is a homograft, which is a vessel harvested from a cadaver. Valve replacement using either of these devices requires thoracotomy and cardiopulmonary bypass.

When the valve in the prostheses must be replaced, for the reasons described above or other reasons, an additional surgery is required. Because many patients undergo their first procedure at a very young age, they often undergo numerous procedures by the time they reach adulthood. These surgical replacement procedures are physically and emotionally taxing, and a number of patients choose to forgo further procedures after they are old enough to make their own medical decisions.

Recently, implantable stented valves have been developed that can be delivered transvenously using a catheter-based delivery system. These stented valves comprise a collapsible valve attached to the interior of a tubular frame or stent. The valve can be any of the valve prostheses described above, or it can be any other suitable valve. In the case of valves in harvested vessels, the vessel can be of sufficient length to extend beyond both sides of the valve such that it extends to both ends of the valve support stent.

The stented valves can also comprise a tubular portion or "stent graft" that can be attached to the interior or exterior of the stent to provide a generally tubular internal passage for the flow of blood when the leaflets are open. The graft can be separate from the valve and it can be made from any suitable biocompatible material including, but not limited to, fabric, a homograft, porcine vessels, bovine vessels, and equine vessels.

The stent portion of the device can be reduced in diameter, mounted on a catheter, and advanced through the circulatory system of the patient. The stent portion can be either self-expanding or balloon expandable. In either case, the stented valve can be positioned at the delivery site, where the stent portion is expanded against the wall of a previously implanted prostheses or a native vessel to hold the valve firmly in place.

One embodiment of a stented valve is disclosed in U.S. Pat. No. 5,957,949 titled "Percutaneous Placement Valve Stent" to Leonhardt, et al, the contents of which are incorporated herein by reference.

Over time, implanted prosthetic conduits and valves are frequently subject to calcification, causing the affected conduit or valve to lose flexibility, become misshapen, and fail to function effectively. Furthermore, because they are long term implants, synthetic conduits sometimes undergo longitudinal stretching or fibrotic ingrowth of the tissue surrounding the conduit. In either case, the conduit can become so distorted that blood flow is impeded or the valve is misaligned, allowing blood to flow around the periphery of the valve.

An additional drawback of using a stented valve is that the stents are often difficult to properly position within a conduit resulting in a misplaced valve. Additionally, stented valves may migrate along the conduit after implantation due to forces applied by the blood flow through the vessel.

It would be desirable, therefore, to provide an implantable pulmonary valve that can readily be replaced, and that would overcome the limitations and disadvantages inherent in the devices described above.

SUMMARY OF THE INVENTION

It is an object of the present invention to provide a vascular valve replacement system having at least a delivery catheter and a replacement valve device disposed on the delivery

catheter. The replacement valve device includes a prosthetic valve connected to a valve support region of an expandable support structure. The valve support region includes a plurality of protective struts disposed between a first stent region and a second stent region.

The system and the prosthetic valve will be described herein as being used for replacing a pulmonary valve. The pulmonary valve is also known to those having skill in the art as the "pulmonic valve" and as used herein, those terms shall be considered to mean the same thing.

Thus, one aspect of the present invention provides a system for treating abnormalities of the right ventricular outflow tract comprising a conduit, a catheter and a prosthetic valve device. The prosthetic valve device comprises a valve connected to a support structure and a barrier member contacting at least a portion of the outer surface of the support structure of the valve device. When the valve device is deployed from the catheter and situated within the conduit, the barrier material prevents blood flow between the inner wall of the conduit and the outer surface of the support structure of the valve device.

Another aspect of the invention provides a pulmonary valve replacement system comprising a conduit, a prosthetic valve device and a barrier material. The valve device is positioned within the conduit and the barrier is deployed from a catheter. When the barrier material is placed between the conduit and the outer surface of the support structure of the valve device to prevent blood flow around the valve device.

Another aspect of the invention provides a pulmonary valve replacement system comprising a conduit, and a prosthetic valve device having a barrier member disposed about at least a portion of the support structure of the valve device. When the valve device is positioned within the lumen of the conduit, the barrier member contacts the surface of the interior wall of the conduit and prevents blood flow around the valve device.

Another aspect of the invention provides a method for replacing a pulmonary valve. The method comprises using a catheter to deliver a pulmonary valve device to a treatment site within a conduit. The pulmonary valve device includes a valve connected to a support structure and a barrier material disposed about at least a portion of the outer surface of the support structure. The method further comprises deploying the valve device from the catheter, positioning the valve device within the conduit and forming a barrier and thereby preventing blood flow around the support structure.

The present invention is illustrated by the accompanying drawings of various embodiments and the detailed description given below. The drawings should not be taken to limit the invention to the specific embodiments, but are for explanation and understanding. The detailed description and drawings are merely illustrative of the invention rather than limiting, the scope of the invention being defined by the appended claims and equivalents thereof. The drawings are not to scale. The foregoing aspects and other attendant advantages of the present invention will become more readily appreciated by the detailed description taken in conjunction with the accompanying drawings.

BRIEF DESCRIPTION OF THE DRAWINGS

FIG. **1** is a schematic interior view of a human heart showing the functioning of the four heart valves;

FIG. **2**A is a schematic view showing the placement of a pulmonary conduit, as is known in the prior art;

FIG. **2**B is a schematic view showing attachment of a pulmonary conduit to the pulmonary artery, as is known in the prior art;

FIG. **2**C is a schematic view showing attachment of a pulmonary conduit to the heart, as is known in the prior art;

FIG. **3**A is a cross sectional side view of a prosthetic pulmonary valve connected to a stent as is known in the prior art;

FIG. **3**B is a schematic view of a stented valve with a barrier member disposed about the exterior surface of the stent portion, in accordance with the present invention;

FIG. **3**C is a schematic view of a pliable barrier material for covering the outer surface of a prosthetic valve device, in accordance with the present invention;

FIG. **4** is a schematic view of a prosthetic valve device situated in a conduit and a helical barrier material being deployed from a catheter, in accordance with the present invention;

FIG. **5** is a schematic view of a prosthetic valve device with situated in a conduit and an expandable barrier that prevents blood flow between the valve device and the wall of the conduit, in accordance with the present invention; and

FIG. **6**. is a flow diagram of a method of treating right ventricular outflow tract abnormalities by replacing a pulmonary valve with a stented valve and a barrier, in accordance with the present invention.

DETAILED DESCRIPTION

The invention will now be described by reference to the drawings wherein like numbers refer to like structures.

Referring to the drawings, FIG. **1** is a schematic representation of the interior of human heart **100**. Human heart **100** includes four valves that work in synchrony to control the flow of blood through the heart. Tricuspid valve **104**, situated between right atrium **118** and right ventricle **116**, and mitral valve **106**, between left atrium **120** and left ventricle **114** facilitate filling of ventricles **116** and **114** on the right and left sides, respectively, of heart **100**. Aortic valve **108** is situated at the junction between aorta **112** and left ventricle **114** and facilitates blood flow from heart **100**, through aorta **112** to the peripheral circulation.

Pulmonary valve **102** is situated at the junction of right ventricle **116** and pulmonary artery **110** and facilitates blood flow from heart **100** through the pulmonary artery **110** to the lungs for oxygenation. The four valves work by opening and closing in harmony with each other. During diastole, tricuspid valve **104** and mitral valve **106** open and allow blood flow into ventricles **114** and **116**, and the pulmonic valve and aortic valve are closed. During systole, shown in FIG. **1**, aortic valve **108** and pulmonary valve **102** open and allow blood flow from left ventricle **114**, and right ventricle **116** into aorta **112** and pulmonary **110**, respectively.

The right ventricular outflow tract is the segment of pulmonary artery **110** that includes pulmonary valve **102** and extends to branch point **122**, where pulmonary artery **110** forms left and right branches that carry blood to the left and right lungs respectively. A defective pulmonary valve or other abnormalities of the pulmonary artery that impede blood flow from the heart to the lungs sometimes require surgical repair or replacement of the right ventricular outflow tract with prosthetic conduit **202**, as shown in FIG. **2**A-C.

Such conduits comprise tubular structures of biocompatible materials, with a hemocompatible interior surface. Examples of appropriate biocompatible materials include polytetrafluoroethylene (PTFE), woven polyester fibers such as Dacron® fibers (E.I. Du Pont De Nemours & Co., Inc.), and bovine vein crosslinked with glutaraldehyde. One common conduit is a homograft, which is a vessel harvested from a cadaver and treated for implantation into a recipient's body.

These conduits may contain a valve at a fixed position within the interior lumen of the conduit that functions as a replacement pulmonary valve. One such conduit **202** comprises a bovine jugular vein with a trileaflet venous valve preserved in buffered glutaraldehyde. Other valves are made of synthetic materials and are attached to the wall of the lumen of the conduit. The conduits may also include materials having a high X-ray attenuation coefficient (radiopaque materials) that are woven into or otherwise attached to the conduit, so that it can be easily located and identified.

As shown in FIGS. **2**A and **2**B, conduit **202**, which houses valve **204** within its inner lumen, is installed within a patient by sewing the distal end of conduit **202** to pulmonary artery **110**, and, as shown in FIG. **2**C, attaching the proximal end of conduit **202** to heart **100** so that the lumen of conduit **202** connects to right ventricle **116**.

Over time, implanted prosthetic conduits and valves are frequently subject to calcification, causing the affected conduit or valve to lose flexibility, become misshapen, and lose the ability to function effectively. Additional problems are encountered when prosthetic valves are implanted in young children. As the child grows, the valve will ultimately be too small to handle the increased volume of blood flowing from the heart to the lungs. In either case, the valve needs to be replaced.

The current invention discloses devices and methods for percutaneous catheter based placement of stented valves for regulating blood flow through a pulmonary artery. In a preferred embodiment, the valves are attached to an expandable support structure and they are placed in a valved conduit that is been attached to the pulmonary artery, and that is in fluid communication with the right ventricle of a heart. The support structure can be expanded such that any pre-existing valve in the conduit is not disturbed, or it can be expanded such that any pre-existing valve is pinned between the support structure and the interior wall of the conduit.

The delivery catheter carrying the stented valve is passed through the venous system and into a patient's right ventricle. This may be accomplished by inserting the delivery catheter into either the jugular vein or the subclavian vein and passing it through superior vena cava into right atrium. The catheter is then passed through the tricuspid valve, into right ventricle, and out of the ventricle into the conduit. Alternatively, the catheter may be inserted into the femoral vein and passed through the common iliac vein and the inferior vena cava into the right atrium, then through the tricuspid valve, into the right ventricle and out into the conduit. The catheters used for the procedures described herein may include radiopaque markers as are known in the art, and the procedure may be visualized using fluoroscopy, echocardiography, ultrasound, or other suitable means of visualization.

The current invention discloses devices and methods for percutaneous catheter based placement of stented valves such as stented valve **306**, shown in FIG. **3**A, for regulating blood flow through a pulmonary artery. In a preferred embodiment, shown in FIG. **3**A, the valve, such as valve **302**, is attached to an expandable support structure **304**. The stented valve is placed in a valved conduit that has been attached to pulmonary artery **122**, and that is in fluid communication with right ventricle **116** of heart **100**. Support structure **304** can be expanded such that any pre-existing valve in the conduit is not disturbed, or it can be expanded such that any pre-existing valve is pinned between the support structure and the interior wall of the conduit.

One embodiment of a stented valve suitable for use in the present invention is disclosed in U.S. Pat. No. 5,957,949 titled "Percutaneous Placement Valve Stent" to Leonhardt, et al., which is assigned to the same assignee as the present application. The contents of the '949 Patent are hereby incorporated by reference.

After a conduit has been implanted, it may become calcified or stretch over time. This stretching or calcification can result in a treatment site that is not round and symmetrical. This often results in an inadequate seal between the exterior surface of stented valve **306** and the wall of the conduit or vessel. One embodiment of the invention is stented valve **310**, shown in FIG. **3**B, in which the exterior surface of stented valve **306** has been covered with a flexible barrier material **308**, shown in FIG. **3**C. In one embodiment, barrier material **308** comprises directionally oriented microfibers attached to the surface of stented valve **310** and extending outward. The microfibers comprise biostable materials such as carbon, silica, polyester, nylon, polyamides, polyolefins, polyurethanes and combinations of these and other materials. In one embodiment of the invention, the microfibers are attached to a thin, pliable film or fabric that forms a covering layer over the exterior of stent portion **304** of replacement valve **310**. The film comprises polyamide, polyurethane, polyimide, polytetrafluroethylene (PTFE), fluorinated ethylene propylene, a fabric of woven polyester fibers such as Dacron® fibers (E.I. Du Pont De Nemours & Co., Inc.), or other medically acceptable polymers. The microfibers are attached to the film by bonding or with an adhesive. In one embodiment, the microfibers are formed integrally with the film or fabric. When stented valve **310** is positioned at the treatment site within the lumen of conduit **202** or a vessel, the directionally oriented microfibers extend outward and contact the interior wall of the conduit and form a barrier that prevents blood from flowing around stented valve **310**, between the outer surface of the stented valve and the inner wall of the conduit. The microfibers also press against the interior surface of the wall of conduit **202** and exert a small but significant force that is sufficient to prevent stented valve **310** from migrating along the length of conduit **202**.

In another embodiment of the invention, barrier member **308** is a foam matrix that is readily compressible. The foam matrix comprises one or more materials such as open cell sponge, polyurethane foam, collagen polyvinyl alcohol, and poly(2-hydroxyethyl methacrylate). In one embodiment of the invention, the foam is compressed in the dry state, and expands as it absorbs water or bodily fluids. Stented valve **310** covered with a compressible foam barrier is delivered to the treatment site in the dry compressed state, and when it is positioned in the lumen of conduit **202** within the vascular system and exposed to blood or other aqueous bodily fluids, the foam absorbs fluid, expands, and fills the space between stented valve **310** and the interior wall of conduit **202** thus forming a barrier that prevents blood flow around valve **310** between the outer surface of the stented valve and the inner wall of the conduit. The expanded foam exerts sufficient force on the wall to maintain stented valve **310** in a fixed position at the treatment site.

In another embodiment of the invention, the barrier member comprises polyester batting adhered to the exterior surface of stented valve **310**. Polyester batting is a disordered array of polyester microfibers that forms a soft, compressible mass. When stented valve **310** is positioned within the lumen of conduit **202**, the polyester batting expands and presses against the wall of conduit **202** and forms a barrier to blood flow around valve **310**. In addition, the polyester batting exerts sufficient force on the wall of conduit **202** to prevent stented valve **310** from migrating along the conduit.

In one embodiment of the invention, the barrier material is not attached to the exterior of stented valve **310**, but instead,

is deployed from the delivery catheter and positioned around the exterior surface of a valve such as stented valve **306** after stented valve **306** has been positioned at the treatment site in the lumen of conduit **202**, (FIG. **4**). In this embodiment, the barrier comprises, for example, flexible helical coil **406** made of one or more medically acceptable materials. Appropriate materials include, but not limited to, platinum, nitinol, platinum-iridium alloy, other platinum alloys, polyvinyl acid, polyvinyl pyrolidone and collagen. The helical coils may be of varying length and diameters, and may include radiopaque markers to facilitate accurate placement of helical barrier material **406**.

As shown in FIG. **4**, to deploy helical barrier material **406** from delivery catheter **404**, the distal tip of catheter **404** is placed adjacent to the space between stented valve **306** and the surface of inner wall **206** of conduit **202**. Helical barrier material **406** is delivered from the distal tip of catheter **404** and injected between exterior surface **304** of stented valve **306** and the interior surface of conduit **202**. Helical barrier material **406** forms a cage-like, open structure that fills the space between stented valve **306** and the surface of the interior wall of conduit **202**. Blood flow through the cage-like structure formed by helical barrier material **406** is slowed, and a blood clot forms that fills the intervening space and provides a barrier to further blood flow. In addition, the framework provided by helical barrier material **406** has sufficient mechanical strength to support stented valve **306** and prevent it from moving out of position at the target site.

FIG. **5** is a schematic view of a stented valve **310** or **306** positioned at the treatment site within the lumen of conduit **202** with a barrier disposed about the exterior surface of the valve device. The barrier may be a barrier member such as barrier material **308** that is attached to exterior surface **304** of stented valve **310**, or, as in the case of the helical coil barrier, it may be positioned around valve device **306** after valve device **306** is situated at the treatment site. In either case, if the lumen of conduit **202** is not symmetrical and precisely complementary to the exterior surface of the valve device, barrier material **308** or **406** fills the space between the exterior surface of valve device **306** or **310** and the wall **206** of conduit **202**. The barrier material prevents blood flow around the exterior surface of implanted valve **306** or **310** and prevents the valve device from moving from a fixed location at the treatment site and migrating along the length of conduit **202**.

FIG. **6** is a flowchart illustrating method **600** for treating right ventricular outflow tract abnormalities by replacing a pulmonary valve in a nonsymmetrical region of a conduit, and using a barrier to prevent blood flow around the periphery of the replacement valve, in accordance with the present invention. Beginning at Block **602**, a stented valve such as valve **306** or **310** is mounted on a delivery catheter such as catheter **404**. The distal portion of delivery catheter **404** is then passed through the venous system and into a patient's right ventricle **1 16**. This may be accomplished by inserting delivery catheter **404** into either the jugular vein or the subclavian vein, and passing it through the superior vena cava into right atrium **118**. The catheter is then passed through tricuspid valve **104**, into right ventricle **116**, and out of the ventricle into conduit **202**. Alternatively, delivery catheter **404** may be inserted into the femoral vein and passed through the common iliac vein and the inferior vena cava into right atrium **118**, then through tricuspid valve **104**, into right ventricle **116**, and out into conduit **308**. The catheters used for the procedures described herein may include radiopaque markers as is known in the art, and the procedure may be visualized using fluoroscopy, echocardiography, ultrasound, or other suitable means of visualization.

Next, stented valve device **306** or **310** is deployed from catheter **404** (Block **604**), and positioned at the treatment site within conduit **202** (Block **606**).

As indicated in Block **608**, a barrier is then formed around the exterior surface of either stented valve device **306** or **310**. In the case of stented valve device **310**, barrier member **308** is attached to, and disposed about, at least a portion of the exterior surface of stented valve **310**. Barrier member **308**, for example directionally oriented microfibers or a layer of compressible foam, contacts the interior wall of conduit **202** and forms a barrier to blood flow. In one embodiment of the invention, barrier member **308** is a compressible foam that absorbs bodily fluid and expands and forms a barrier by filling the space between stented valve **310** and the interior wall of conduit **202**. In one embodiment, stented valve device **306** is positioned within conduit **202**, and a flexible coil barrier material **406** is injected between the exterior of stented valve device **306** and the wall of conduit **202**. Blood trapped within the matrix formed by helical coil material **406** clots and forms a barrier to blood flow. In any of the above embodiments, the barrier around the exterior of stented valve device **306** or **310** prevents blood flow around the exterior surface of stented valve device **306** or **310**, and maintains stented valve **306** or **310** in a fixed position, by preventing the valve device from migrating along the length of the conduit as indicated in Block **614**.

While the invention has been described with reference to particular embodiments, it will be understood by one skilled in the art that variations and modifications may be made in form and detail without departing from the spirit and scope of the invention.

What is claimed is:

1. A vascular valve replacement system, the system comprising:

an implantable conduit having a conduit wall;

a catheter;

a prosthetic valve device including a valve connected to a support structure, the valve device disposed on the catheter; and

a barrier member disposed about an outer surface of the support structure of the valve device, the barrier member comprising a layer of material that will fill space between the valve support structure and the conduit wall when the support structure is deployed in the implantable conduit, wherein the barrier member comprises directionally oriented microfibers and wherein the directionally oriented microfibers comprise a material selected from a group consisting of carbon, silica, polyester, nylon, polyamides, polyolefins, polyurethanes, and mixtures thereof,

wherein when the prosthetic valve device is deployed from the catheter in the implantable conduit, the barrier member prevents blood flow between the conduit and the outer surface of the support structure of the valve device.

2. A vascular valve replacement system, the system comprising:

an implantable conduit having a conduit wall;

a catheter;

a prosthetic valve device including a valve connected to a support structure, the valve device disposed on the catheter; and

a barrier member disposed about an outer surface of the support structure of the valve device, the barrier member comprising a layer of material that will fill space between the valve support structure and the conduit wall

when the support structure is deployed in the implantable conduit, wherein the barrier member comprises polyester batting,

wherein when the prosthetic valve device is deployed from the catheter in the implantable conduit, the barrier member prevents blood flow between the conduit and the outer surface of the support structure of the valve device.

3. A vascular valve replacement system, the system comprising:

an implantable conduit having a conduit wall;

a catheter;

a prosthetic valve device including a valve connected to a support structure, the valve device disposed on the catheter; and

a barrier member disposed about an outer surface of the support structure of the valve device, the barrier member comprising a layer of material that will fill space between the valve support structure and the conduit wall when the support structure is deployed in the implantable conduit, wherein the barrier member is a compressible foam matrix, and wherein the compressible foam matrix comprises a material selected from a group consisting of open cell sponge, polyurethane foam, collagen, polyvinyl alcohol, and poly (2-hydroxyethyl methacrylate),

wherein when the prosthetic valve device is deployed from the catheter in the implantable conduit, the barrier member prevents blood flow between the conduit and the outer surface of the support structure of the valve device.

4. The system of claim **3** wherein the volume of the compressible foam matrix increases upon exposure to water.

5. The system of claim **3** wherein the barrier member prevents the valve device from migrating along the length of the conduit.

6. A pulmonary valve replacement system, the system comprising:

an implantable conduit having a lumen defined by an inner wall;

a catheter;

a prosthetic valve device including a valve connected to a support structure, the valve device positioned in the conduit, and a barrier disposed about at least a portion of an outer surface of the support structure, wherein the baffler is deployed via the catheter between the inner wall of the conduit and the outer surface of the support structure of the valve device to prevent blood flow there between and wherein the barrier is a helical coil.

7. The system of claim **6** wherein the helical coil comprises one or more materials selected from a group consisting of platinum, nitinol, platinum-iridium alloy, polyvinyl acid, polyvinyl pyrolidone and collagen.

8. The system of claim **6** wherein the helical coil promotes blood clotting between the inner wall of the conduit and at least a portion of the outer surface of the support structure.

9. A method for replacing a pulmonary valve, the method comprising:

delivering a prosthetic valve device including a valve connected to a support structure having a barrier disposed about at least a portion of an outer surface of the support structure to a treatment site within an implantable conduit via catheter;

deploying the prosthetic valve device from the catheter;

positioning the prosthetic valve device within the implantable conduit;

forming a barrier around the outer surface of the support structure; and preventing blood flow around the support structure via the barrier and wherein forming a barrier further comprises increasing the volume of the barrier member by expanding a foam matrix.

10. A method for replacing a pulmonary valve, the method comprising:

delivering a prosthetic valve device including a valve connected to a support structure having a barrier disposed about at least a portion of an outer surface of the support structure to a treatment site within an implantable conduit via catheter;

deploying the prosthetic valve device from the catheter;

positioning the prosthetic valve device within the implantable conduit;

forming a barrier around the outer surface of the support structure; and preventing blood flow around the support structure via the barrier and wherein forming a barrier further comprises deploying the barrier material from a catheter and placing the barrier material between the outer surface of the support structure and the inner wall of the conduit.

11. The method of claim **10** further comprising preventing the prosthetic valve from migrating along the length of the conduit.

12. The method of claim **10** wherein forming a barrier around the outer surface of the support structure maintains the prosthetic valve in a fixed position that is perpendicular to the direction of blood flow within the vascular conduit and thereby improves the functioning of the valve.

* * * * *

UNITED STATES PATENT AND TRADEMARK OFFICE

CERTIFICATE OF CORRECTION

PATENT NO. : 7,524,331 B2
APPLICATION NO. : 11/278925
DATED : April 28, 2009
INVENTOR(S) : Birdsall

It is certified that error appears in the above-identified patent and that said Letters Patent is hereby corrected as shown below:

Column 9, line 44, "the baffler" should be changed to -- the barrier --

Signed and Sealed this

Tenth Day of November, 2009

David J. Kappos

David J. Kappos
Director of the United States Patent and Trademark Office