UNITED STATES PATENT AND TRADEMARK OFFICE

BEFORE THE PATENT TRIAL AND APPEAL BOARD

EDWARDS LIFESCIENCES CORPORATION AND
EDWARDS LIFESCIENCES LLC,
Petitioner,

v.

AORTIC INNOVATIONS LLC,
Patent Owner.

Case IPR2023-01151
Patent 11,337,834

PATENT OWNER AORTIC INNOVATIONS LLC'S PRELIMINARY RESPONSE

TABLE OF CONTENTS

I. INTRODUCTION 1

II. THE BOARD SHOULD INTERPRET CLAIM TERMS CONSISTENT WITH THEIR INTERPRETATION IN PRIOR PROCEEDINGS 2

III. PETITIONER'S SPENSER II COMBINATIONS FAIL (GROUNDS 1-2, ALL CLAIMS). 3

A. The Claimed Spacings Facilitate A Narrow Crimp Profile While Still Sealing Against Paravalvular Leakage Upon Expansion. 4

B. Spenser II Was Specifically Distinguished In Prosecution Based Upon The "Spacing" Limitations (Claims 2, 17-18). 6

C. The "Spacing" Limitations (Claims 2, 17-18). 16

1. Petitioner's Inherency Arguments Fail. 17

2. Dr. Buller's Proffered Reasons Do Not Remotely Show That Spenser II's Compressible Material Necessarily Has "Spacings" That Extend Through To The Frame. 22

D. "Free Of A Non-Porous Graft Covering" (Claim 9). 27

IV. PETITIONER'S CHUTER COMBINATIONS FAIL (GROUNDS 3-6, ALL CLAIMS). 34

A. Petitioner Fails To Show That Its Chuter Backing Combinations Render The Claims Obvious. 34

1. The "Spacing" Limitations (Claims 2, 17-18). 35

2. The Prosecution History Confirms That Chuter's Fabric Pile Backing Does Not Disclose Or Render Obvious The "Spacing" Limitations (Claims 2, 17-18). 47

3. "Free Of A Non-Porous Graft Covering" (Claim 9). 53

B. Petitioner Fails To Show That Its Chuter Occluder Combinations Render The Claims Obvious. 57

1. Petitioner Fails To Demonstrate A POSITA Would Be Motivated To Make Its Chuter-Occluder Combinations Or Could Do So With A Reasonable Expectation Of Success. 58

2. Petitioner's Unspecified Modifications Are Insufficient To Show Its Combinations Meet Each Of The Claims. 73

V. DISCLAIMED CLAIMS 1, 3-6, 8 AND 10-16 SHOULD BE TREATED AS THOUGH THEY NEVER EXISTED AND MAY NOT BE A BASIS FOR INSTITUITON UNDER 37 C.F.R. § 42.107(E). 78

VI. CONCLUSION 79

COURT DECISIONS

ActiveVideo Networks Inc. v. Verizon Comms., Inc.,
694 F.3d 1312 (Fed. Cir. 2012) 76

Arendi S.A.R.L. v. Apple Inc.,
832 F.3d 1355 (Fed. Cir. 2016) 41

Comput. Docking Station Corp. v. Dell, Inc.,
519 F.3d 1366 (Fed. Cir. 2008) 12

DSS Tech. Mgmt. v. Apple Inc.,
885 F.3d 1367 (Fed. Cir. 2018) 41, 76

Ekchian v. Home Depot, Inc.,
104 F.3d 1299 (Fed. Cir. 1997) 12

Google LLC v. Hammond Dev. Int'l, Inc.,
54 F.4th 1377 (Fed. Cir. 2022) 31

In re Ratti,
270 F.2d 810 (CCPA 1959) 62, 67

Intergraph Corp. v. Intel Corp.,
253 F.3d 695 (Fed. Cir. 2001) 33

InTouch Techs., Inc. v. VGo Commc'ns., Inc.,
751 F.3d 1327 (Fed. Cir. 2014) 77

K/S HIMPP v. Hear-Wear Techs., LLC,
751 F.3d 1362 (Fed. Cir. 2014) 42

M2M Sols. LLC v. Amazon.com, Inc.,
2023 U.S. App. LEXIS 4053 (Fed. Cir. Feb. 22, 2023) 31

Ohio Willow Wood Co. v. Alps South, LLC,
735 F.3d 1333 (Fed. Cir. 2013) 32

Par Pharm,, Inc. v. Twi Pharms., Inc.,
773 F.3d 1186 (Fed. Cir. 2014) 18

Plas-Pak Indus., Inc. v. Sulzer Mixpac AG,
600 F.App'x 759 (Fed. Cir. 2015) 62, 67

Polaris Indus., Inc. v. Arctic Cat, Inc.,
882 F.3d 1056 (Fed. Cir. 2018) 62, 67

Saffran v. Johnson & Johnson,
712 F.3d 549 (Fed. Cir. 2013) 11

Sisvel Int'l S.A. v. Sierra Wireless, Inc.,
-- 4th --, Slip Op. at 15 (Fed. Cir. Oct. 6, 2023) 76

Wasica Fin. GmbH v. Cont'l Auto. Sys.,
853 F.3d 1272 (Fed. Cir. 2017) 57

AGENCY DECISIONS

Advanced Bionics, LLC v. MED-EL Elektromedizinische Geräte GmbH,
IPR2019-01469, Paper 6 (Feb. 13, 2020)
(precedential) 13

Baker Hughes v. LiquidPower Specialty Prods., Inc.,
IPR2016-01903, Paper 74 (PTAB Mar. 8, 2019) 78

Becton, Dickinson & Co. v. B. Braun Melsungen AG,
IPR2017-01586, Paper 8 (Dec. 15, 2017)
(precedential) 12, 51

Gator Bio, Inc. v. Sartorius Bioanalytical Instruments, Inc.,
IPR2023-00215, Paper 19 (PTAB June 20, 2023) 51

Intel Corp. v. VLSI Technology LLC,
IPR2018-01040, Paper 36 (PTAB Feb. 12, 2020).....79

Rimfrost AS v. Aker BioMarine Antarctic AS,
IPR2018-01730, Paper 35 (Mar. 6, 2020) 32

RPX Corp. et al. v. Parity Networks, LLC,
IPR2018-00097, Paper 7 (PTAB Apr. 24, 2018) 46

Sonos, Inc. v. Google, LLC,
IPR2021-00963, Paper 9 (PTAB Nov. 9, 2021).....51

REGULATIONS

37 C.F.R. § 1.321(a).....78

37 C.F.R. § 42.107(e).....1, 79

OTHER AUTHORITIES

MPEP §706.07(h)(XI)(A).....33

EXHIBIT LIST	
2001	Reserved
2002	Declaration of Stephen J.D. Brecker [Brecker-Decl.]
2003-2007	Reserved
2008	Declaration of Nigel Buller, *Edwards Lifesciences Corp. et al. v. Aortic Innovations, LLC*, IPR2022-00193 (filed Nov. 12, 2021) [-00193-Buller-Decl.]
2009-2039	Reserved
2040	Excerpts from the opposition proceeding to European Patent 2982337 [Spenser-II-European-Proceeding]
2041-2042	Reserved
2043	Institution Decision of IPR2022-00034 [IPR2022-00034 Inst.-Dec.]
2044-2046	Reserved
2047	Edwards Petition for Inter Partes Review filed in IPR2022-00034 [IPR2022-00034 Petition]
2048-2051	Reserved
2052	Deposition Transcript of Nigel P. Buller In IPR2022-00034 [Buller-00034-Depo.]
2053-2086	Reserved
2087	Excerpts of Defendants' Preliminary Invalidity Contentions filed in Aortic Innovations LLC v. Edwards Lifesciences Corp, Edwards Lifesciences LLC, and Edwards Lifesciences (U.S.), Inc. Case No. 1:21-cv-01377-JPM (Delaware) [PICs]

2088-2100	Reserved
2101	U.S. Patent No. US6,663,667 [Dehdashtian]
2102	U.S. Patent Application No. 2006/0004442 to Spenser [’442 Application]
2103	Declaration of Stephen J.D. Brecker filed in IPR2022-00556 [Brecker-556-Decl.]
2104-2107	Reserved
2108	Petitioner’s Reply to Patent Owner’s Response in IPR2022-00034
2109	Petitioner’s Reply to Patent Owner’s Response in IPR2022-01527
2110	Petitioner’s Reply to Patent Owner’s Response in IPR2022-01584
2111-2121	Reserved
2122	Transcript of April 12, 2023 Deposition of Nigel P. Buller in IPR2022-00556 [Buller-556-Reply-Depo.]
2123	Reserved
2124	Final Written Decision of IPR2022-00556 [-00556FWD]
2125	U.S. Patent No. 6,096,052 [Callister]
2126	File History of US Patent Application 2002/0151958 A1 to Chuter [Chuter-FH]
2127	*Aortic Innovations LLC v. Edwards Lifesciences Corp.* No. 1:21-cv-01377-JPM, Claim Construction Order (May 9, 2023) [Aortic-I-Claim-Construction-Order]
2128	Declaration of Nigel P. Buller filed in IPR2022-00556 [Buller-556-Decl.]
2129	Edwards Petition for Inter Partes Review filed in IPR2022-00556 [-00556-Pet.]

2130	Petitioner's Reply to Patent Owner's Response in IPR2022-00556 [-00556-Reply]
2131	Prosecution History of U.S. Patent No. 10,987,236 ['236-FH]
2132	U.S. Patent No. 10,966,846 ['846]
2133	U.S. Patent No. 10,987,236 ['236]
2134	Reply Declaration of Nigel P. Buller filed in IPR2022-00556 [Buller-556-Reply-Decl.]
2135	Disclaimer in Patent Under 37 CFR 1.321(a), U.S. Patent 11, 337, 834, Oct. 10, 2023 [Disclaimer]

I. INTRODUCTION

The Petition should be denied for it fails to demonstrate a reasonable likelihood of prevailing as to any remaining challenged claim (2, 9, 17 and 18) .[1]

Claims 2, 17 and 18 require "spacings" "extending through a thickness" of one or two pluralities of "fibers" "to the frame" or through the "cells of the frame." Ex. 1001 ['834-FH] cls. 2, 17-18. Claim 9 requires that "the prosthetic heart valve is free of a non-porous graft covering between" each "plurality of fibers and the frame." *Id.*, cl. 9. Certain limitations present in the '834 should be interpreted consistently with prior proceedings. Section II.

Petitioner's grounds rely upon the addition of either Spenser II or Chuter as satisfying the fibers/spacing limitations to the frame of Spenser I or Levi, allegedly producing a "prosthetic heart valve" that meets the challenged claims. Pet., 19. Petitioner's Spenser II grounds (Grounds 1-2) fail because Spenser II was distinguished in prosecution as not having "spacings," a limitation noted in the Examiner's reasons for allowance. *See* Section III.B. If more is needed, here too,

---

[1] Claims 1, 3-6, 8, and 10-16 have been disclaimed (Ex. 2135) and thus cannot be a basis for institution. *See* Section V; 37 C.F.R. § 42.107(e). Claim 7 is not challenged. Pet., 19.

Petitioner fails to show that Spenser II discloses or renders obvious such "spacings." Sections III.C. Nor does Petitioner show that Spenser II is "free of a non-porous graft covering" given the Board's determination that Spenser II's compressible material is an "outer graft covering" and Petitioner's failure to show that the compressible material would be "non-porous." Section III.D.

Grounds 3-6 rely in the alternative on two distinct Chuter embodiments, (1) a graft/backing layer embodiment and (2) an occluder embodiment without a backing layer. Petitioner fails to show that its Chuter graft combinations disclose or render obvious "spacings," or that Chuter's backing layer is "free of a non-porous graft covering." Section IV.A. Petitioner's Chuter occluder combinations fail because Petitioner fails to show that a POSITA would be motivated to combine Chuter's occluding fibers with Spenser I/Levi or could do with a reasonable expectation of success. Even if that could be overlooked, Petitioner fails to show that the resulting combination would satisfy the claims. Section IV.B.

II. THE BOARD SHOULD INTERPRET CLAIM TERMS CONSISTENT WITH THEIR INTERPRETATION IN PRIOR PROCEEDINGS.

The '834 contains terms which have been construed by the Board or by the Delaware District Court. These terms should be interpreted consistently in this proceeding. Specifically, the following terms present in the '834 terms were

interpreted by the District Court and should be interpreted consistently in this proceeding:

Term	Court's Construction
"Frame"	Plain and Ordinary Meaning
"Fibers"	Plain and Ordinary Meaning

See Ex. 2127 [Aortic-I-Claim Construction-Order] 7, 22; Ex. 1001 ['834-Patent] cls. 1, 17-18.

Additionally, in IPR2022-00556 and IPR2022-00034, the Board adopted the following construction of "outer graft covering":

Term	Board's Construction
"Outer Graft Covering"	"a structure, such as a cloth, fabric or other material, that covers all, or part of" both "the struts and members" and "the open spaces, or interstices, in the spaces between those struts and members."

Ex. 2124 [-00556FWD] 29-30; Ex. 1120 [-00034FWD] 40.

III. PETITIONER'S SPENSER II COMBINATIONS FAIL (GROUNDS 1-2, ALL CLAIMS).

Grounds 1 and 2 (the Spenser II grounds/combinations) propose combining Spenser II's compressible material with Spenser I's or Levi's frame. Petitioner, however, fails to demonstrate that these grounds disclose or render obvious the various "spacing" limitations required by the claims. The claimed "spacing" limitations allow for a valve with a narrow crimp profile that also seals against paravalvular leakage. *See* Section III.A. Dispositively, in prosecution, the

Applicant expressly distinguished Spenser II's compressible material as not disclosing such "spacings" and the Examiner specifically relied upon the "spacings" limitation in her reasons for allowance. *See* Section III.B. And the Examiner's conclusion was sound, for Petitioner fails to show that the "spacing" limitations are met. *See* Section III.C. Additionally, Petitioner fails to prove that its Spenser II combinations are "free of a non-porous graft covering," as required by claim 9. *See* Section III.D.

A. The Claimed Spacings Facilitate A Narrow Crimp Profile While Still Sealing Against Paravalvular Leakage Upon Expansion.

The claims require a "spacing extending through a thickness" of one or two pluralities of "fibers" and further extending "to the frame" or "through the plurality of cells of the frame." Ex. 1001 ['834] cls. 2, 17-18. The "spacing" limitations beneficially allow for a reduced crimp profile while still creating a seal against paravalvular leakage. As Dr. Brecker explains:

> The "spacing" limitations allow for a distinct benefit, *i.e.*, narrowing the delivery profile by reducing the amount of material used while still creating a seal against paravalvular leakage. This is perhaps best illustrated in Figures 13 and 14, which demonstrate how the spacings may be arranged to still create a seal against PVL when the valve is expanded in the body:

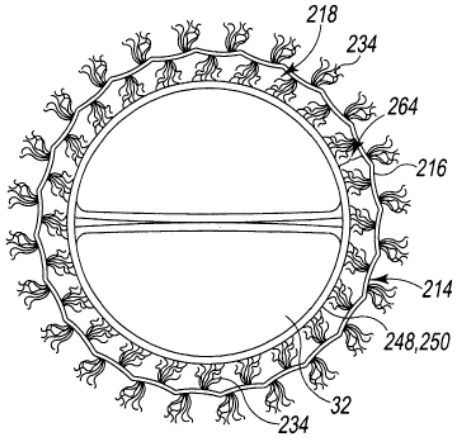

Fig. 13

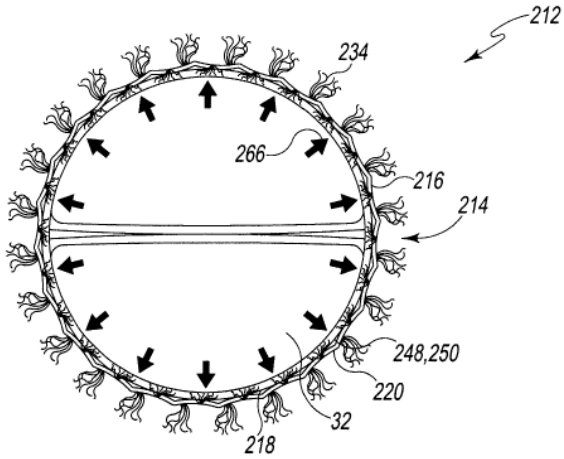

Fig. 14

> Ex. 1001 ['834-Patent] Figs. 13-14; 14:35-42, 15:5-9, 12:53-56, 18:34-44, 19:53-57; Ex. 1002 ['834-FH] 1133 (relying on Figure 13 as illustrating an "opening extending through a thickness" of the "second array of fibers … to the frame"), 995-1000 (amending "openings" limitation to current "spacings" limitation); Ex. 2131 ['236-FH] 205-206 (relying on Fig. 13 to show "openings" as required by related '236 patent). Per the '834's teachings, the "spacings" permit a delivery profile low enough for transfemoral delivery and formation of a paravalvular seal by compression of the fibers atop or within the spacings after the valve is expanded inside the body. *See, e.g.*, Ex. 1001 ['834] 18:34-39, 19:53-56, 14:31-42, 1:57-59, Figs. 13-14, 20-22.

Ex. 2002 [Brecker-Decl.] ¶36.

The Board too quoted and credited Dr. Brecker's prior testimony that, "a sparse distribution of fibers with significant gaps and spaces would be porous, at least until compressed within the body would form a seal is an unexpected result."

Ex. 2124 [-00556FWD] 33-34 (quoting Ex. 2103 [Brecker-556-Decl.] ¶160); *see also* Ex. 1120 [-00034FWD] 44 (similar). Similarly, both experts agreed that they had never seen a distribution of fibers in a prior art TAVR or stent graft like those shown in the ’834, prior to reviewing the specification. Ex. 2052 [Buller-00034-Depo.] 167:10-15, 169:5-25 (admitting “I can’t think of a diagram in a patent that looks like [Fig. 9],” “I don’t remember” any patent, reference, product, or prototype “that looks like Figure 9, no,” and “I don’t remember seeing one that’s illustrated like Figure 9 is.”); Ex. 2002 [Brecker-Decl.] ¶38.

B. Spenser II Was Specifically Distinguished In Prosecution Based Upon The “Spacing” Limitations (Claims 2, 17-18).

For its Spenser II grounds, Petitioner identifies Spenser II’s compressible material’s outwardly-extending fibers as the “first plurality of fibers” and what it describes alternatively as an “inner cloth” or “base layer” from which the fibers extend as the “second plurality of fibers.” *See* Pet., 45-46, 49. Because the claims require not merely spacings, but spacings “extending through” the plurality/pluralities of fibers “***to the frame***” or “through the … ***cells of the frame***,” Petitioner must show that its Spenser II combinations disclose or render obvious a “spacing extending through a thickness” of Spenser II’s compressible material’s base layer, which is adjacent to the frame.

As a threshold matter, Petitioner's Spenser II combinations fail to meet the spacings limitations because Spenser II, and its compressible material in particular, was expressly distinguished in prosecution as ***lacking*** the claimed "spacings." The "spacing" limitations played a pivotal role in prosecution and were specifically in the Examiner's reasons for allowance:

> The following is an examiner's statement of reasons for allowance ... ***The prior art does not disclose or render obvious*** the prosthetic heart valve defining ***a spacing extending through a thickness of the plurality of fibers*** that is created by a distance between adjacent fibers thereof through the plurality of cells of the frame.

Ex. 1002 ['834-FH] 850.

The Applicant cited the '834's Figures 11 and 12 as exemplifying the "spacings," and explained that the "spacings" are "not shown in the prior art" of record:

> Applicant submits that FIG. 12 of the Application as filed illustrates this spacing. An annotated version is shown below:

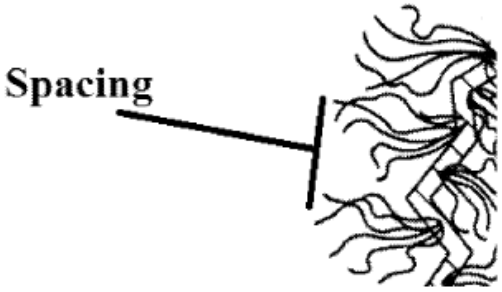

And with further reference to annotated FIG. 11:

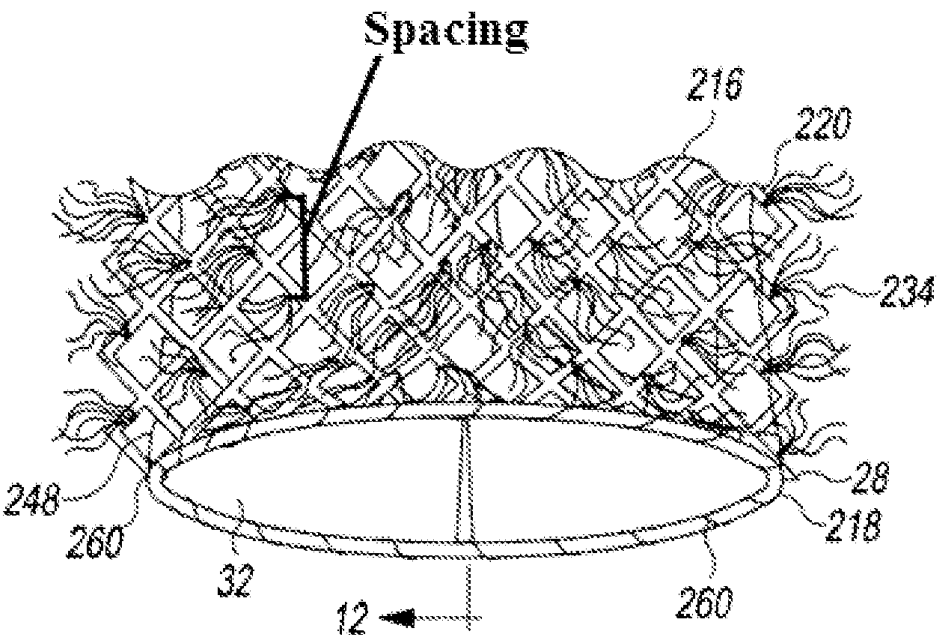

Fig. 11

> As the MPEP makes clear, drawings alone may provide a 'written description' of an invention as required by Sec. 112. This is the case in this instance ***where the fibers are shown with spacings therebetween. This advantage is not shown in the prior art***.

Ex. 1002 ['834-FH] 1001-2.

This advantage clearly is not "shown" (or described) in Spenser II. Indeed, the Applicant specifically distinguished both Spenser II (and Fig. 22 in particular) and Walther (a "real world embodiment" of Spenser II, Ex. 2052 [Buller-00034-Depo.] 104:17-105:7) as not disclosing the "spacing" limitation:

> What the Applicant is claiming is the spacing between segments of some fibers ... The spacing allows for inward deflection and

> compression of the fibers when the frame is expanded to fill any voids within the annulus and the seal formed by the fibers. This is well-illustrated in the images showing the deployed devices.
>
> Compare this to a very ***tightly knitted outer seal*** made of tightly knitted fibers (such as found in NPL, Walther, of record in the IDS dated July 27, 2021, ***or WIPO Publication 2006005015 A2 to Spenser [i.e., Spenser II], with reference to Figure 22, of record in the IDS dated July 11, 2021), there the lack of "spacings" between some fibers*** would not allow for the compression of the outwardly extending fibers.

Ex. 1002 ['834-FH] 1001.

In accord, the Board credited Dr. Brecker's testimony distinguishing "the gaps and spaces between the fibers" shown in the '834's Fig. 13 with a "solid, non-porous, graft material ... like the one[] seen in ... Spenser II." Ex. 2124 [-00556FWD] 33-34 (quoting Ex. 2103 [Brecker-556-Decl.] ¶160); Ex. 1120 [-00034FWD] 44 (similar); IPR2022-00556, Paper 10 (Inst. Dec.), 47 (PTAB Sept. 8, 2022) ("Spenser II's description of a fabric or cloth compressible material suggests a similar outer graft covering" to Levi's "densely woven outer PET skirt."). And the distinction between the '834's Fig. 13 and Spenser II's compressible material is readily apparent:

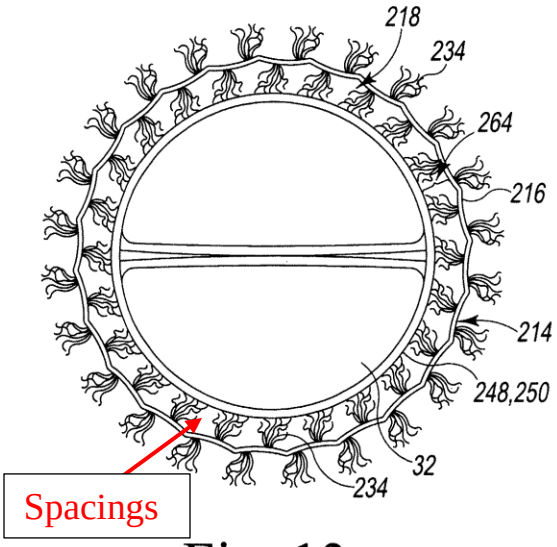

Fig. 13

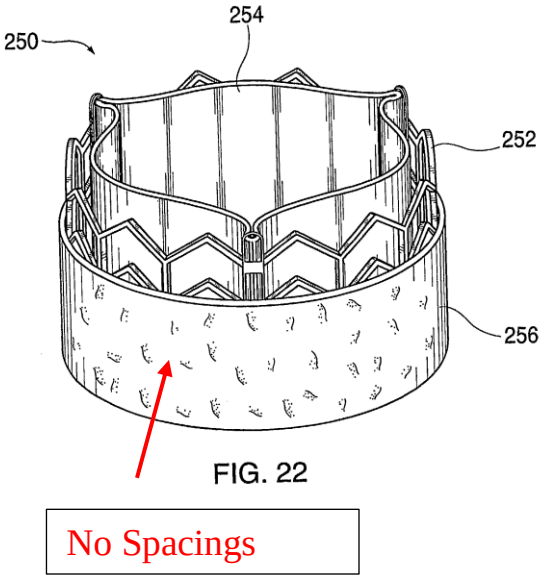

FIG. 22

As seen above, Spenser II's compressible material forms a tight outer seal, which is confirmed by its description as a "sleeve," "layer," or "cloth." Ex. 1011 [Spenser-II] ¶145. The compressible material is opaque and spacings extending to the frame or through the frame are neither shown nor described. The compressible material, moreover, bears no resemblance to the exemplary "spacings" identified in prosecution:

Spenser II's Compressible Material Contains No "Spacings" That Extend To Or Through The Frame

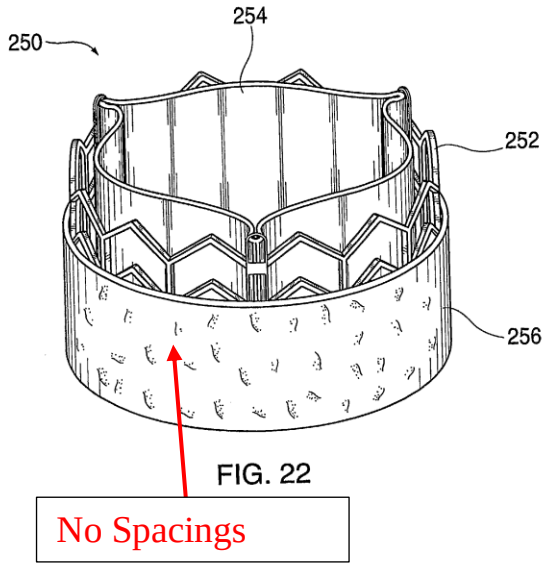

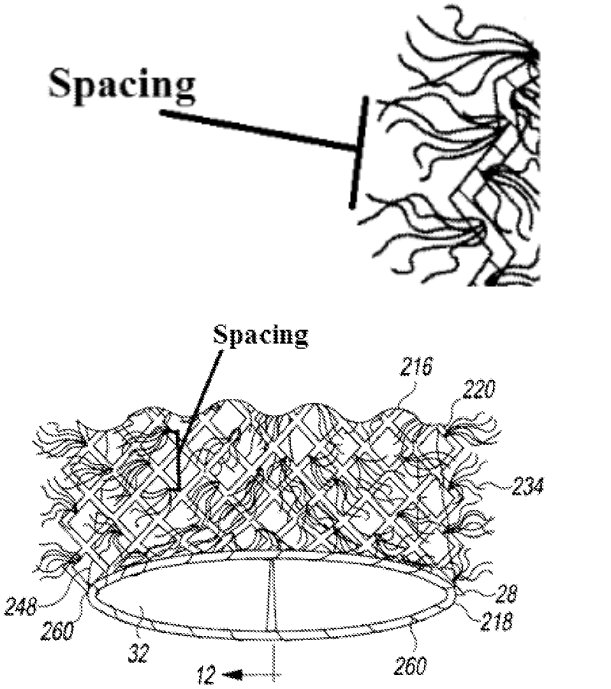

Fig. 11

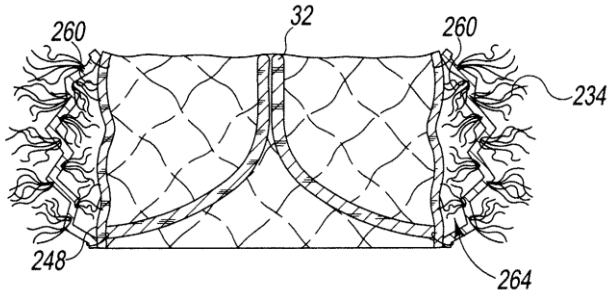

Fig. 12

The Applicant's specific identification of Spenser II's compressible material as ***not*** disclosing "spacings" operates as a disclaimer. *Saffran v. Johnson & Johnson*, 712 F.3d 549, 559 (Fed. Cir. 2013) ("an applicant's argument that a prior art reference is distinguishable on a particular ground can serve as a disclaimer of

claim scope…"); *Ekchian v. Home Depot, Inc.*, 104 F.3d 1299, 1304 (Fed. Cir. 1997) ("by distinguishing the claimed invention over the prior art, an applicant is indicating what the claims do not cover…"). And this is clearly a disclaimer, as the Applicant expressly stated that Spenser II's compressible material did ***not*** disclose the claimed "spacings." While Petitioner attempts to addresses §325(d) (Pet., 98-99), Petitioner does not explain why the Applicant's argument does not operate as a disclaimer.

Even if, *arguendo*, the Applicant's statements do not operate as a disclaimer, they nonetheless would inform a POSITA's understanding of the claims and further confirm that Spenser II's compressible material does not disclose or render obvious the claimed spacings. *Comput. Docking Station Corp. v. Dell, Inc.*, 519 F.3d 1366, 1374 (Fed. Cir. 2008) ("Statements made during prosecution may also affect the scope of the claims.") (citation omitted).

The prosecution history, not to mention the Board's prior findings, should bar reconsideration of the issue of whether Spenser II's compressible material discloses the claimed "spacings" under §325(d). Here, "the same or substantially the same prior art or arguments previously were presented to the Office." *Becton, Dickinson & Co. v. B. Braun Melsungen AG*, IPR2017-01586, Paper 8, 17 (Dec. 15, 2017) (precedential); *Advanced Bionics, LLC v. MED-EL Elektromedizinische Geräte GmbH*, IPR2019-01469, Paper 6, 10 (Feb. 13, 2020) (precedential)

("*Advanced Bionics*"). Under *Advanced Bionics*' two-part framework, the Board first determines whether the same or substantially the same art or arguments were presented to the Office (including in prosecution or "AIA post-grant proceedings") and, if so, considers whether the petitioner has demonstrated a material error by the Office. *Advanced Bionics*, 8, 10. Furthermore, "[i]f reasonable minds can disagree regarding the purported treatment of the art or arguments, it cannot be said that the Office erred in a manner material to patentability." *Id.*, 9.

As to the first prong, the Applicant explained, and the Examiner agreed, that Spenser II's compressible material did not disclose the "spacing" limitations specifically identified in the Examiner's reasons for allowance. Ex. 1002 ['834-FH] 1001-2, 850. Thus, the same art ***and*** argument presented here was expressly rejected in prosecution.

Moreover, the Examiner was provided Petitioner's parallel arguments that Spenser II (and Walther) disclosed a similar "opening" limitation in IPR2022-00556 ("-00556"). Ex. 2133 ['236] cl. 4; Ex. 1002 ['834-FH] 129, 140, 143-330. Therein, Dr. Buller argued that Spenser II disclosed or rendered obvious this similar "opening" limitation. *Id.*, 293-295 (Spenser II). Yet, even once made fully aware of Petitioner's arguments, the Examiner issued a Corrected Notice of Allowability, confirming her allowance of the claims. *Id.*, 36.

As to the second prong, Petitioner has not demonstrated any material error by the Office. As discussed, the Applicant explained how the spacings shown in, *e.g.*, Figures 11 and 12 of the '834 are nothing like Spenser II's tight outer seal. In accord, the Board credited Dr. Brecker's testimony distinguishing the "gaps and spaces between fibers" shown in, *e.g.*, the '834's Figure 13 from the "solid, non-porous graft material" depicted in Spenser II. Ex. 2124 [-00556FWD] 33-34 (quoting Ex. 2103 [Brecker-556-Decl.] ¶160); Ex. 1120 [-00034FWD] 44 (similar).

Petitioner contends that §325(d) should not apply, alleging that the Applicant "materially mischaracterized Spenser II" by stating that Spenser II's compressible material comprises "a very tightly knitted outer seal made of tightly knitted fibers" and that "the lack of 'spacings' between some fibers would not allow for compression of the outwardly extending fibers," further stating that "POSITA's would have understood Spenser II's compressible material to encompass loose, porous materials." *Id.* Pet., 99 (citing Ex. 1002 ['834-FH] 1001).

Petitioner's position is without merit. Spenser II's Figure 22 is described as a "sleeve," and depicts a tight outer seal. Ex. 1011 [Spenser-II] ¶145; Fig. 22. Moreover, Dr. Buller described the compressible material as "velour-like woven or knitted" PET. Ex. 1003 [Buller-Decl.] ¶162 ("a [POSITA] would have been

motivated to use … a velour-like woven or knitted PET cloth[] for the 'compressible material' in Figure 22 of Spenser II."); Ex. 2134 [Buller-556-Reply-Decl.] ¶56 (similar).

Thus, nothing in either Spenser II or Dr. Buller's prior description suggests a "loose, porous material." Indeed, the Board credited Dr. Brecker's testimony characterizing Spenser II's compressible material as "a solid, ***non-porous*** graft material." Ex. 2124 [-00556FWD] 33-34 (quoting Ex. 2103 [Brecker-556-Decl.] ¶160). Dr. Buller similarly testified the compressible material must be "sufficiently dense to prevent blood from leaking through the cloth/fabric." Ex. 2128 [Buller-556-Decl.] ¶222; IPR2022-00556, Paper 10 (Inst. Dec.), 47 (PTAB Sept. 8, 2022) (Spenser II suggests a "***densely woven*** outer PET skirt.").

Petitioner further contends that "PO's argument is directly contradicted by the express disclosure of Spenser II" which "describes the outer sealing material as 'compressible.'" Pet., 99. But the Applicant did not argue that the compressible material was not compressible. Rather, the Applicant noted that the compressible material would not allow for compression of the outwardly extending fibers because there would not be "voids within the seal" for the outwardly-extending fibers to "fill." Ex. 1002 ['834-FH] 1001; Ex. 2002 [Brecker-Decl.] ¶45. This is, again, consistent with Dr. Buller's description of the compressible material as "sufficiently dense to prevent blood from leaking." Ex. 2128 [Buller-556-Decl.]

¶222; Ex. 2122 [Buller-556-Reply-Depo.] 20:2-21:3 (nonporous means "impermeable to fluid"). Consistent with the Applicant's statement, a nonporous, "sufficiently dense" base layer would inhibit the ability of the outwardly extending fibers to compress as can be readily confirmed by comparing Spenser II's Figure 22 with those of the '834:

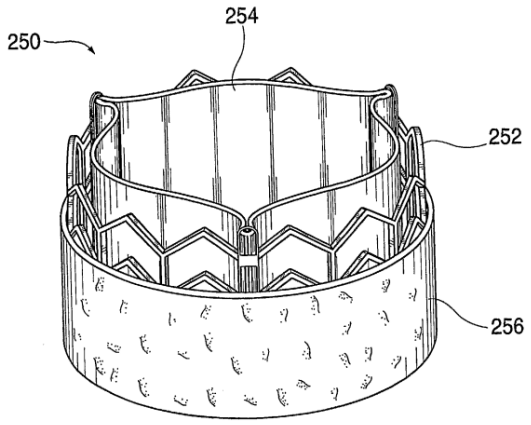

FIG. 22

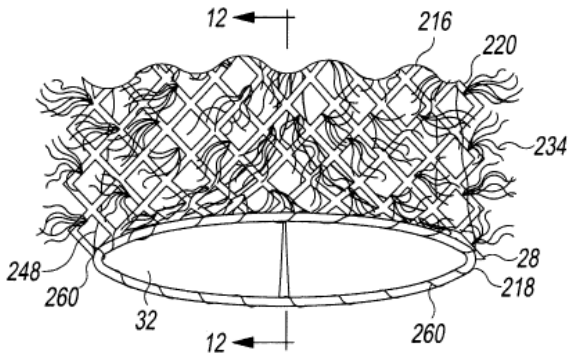

Fig. 11

Ex. 1011 [Spenser-II] Fig. 22; Ex. 1001 ['834-Patent] Fig. 11; Ex. 2002 [Brecker-Decl.] ¶45. Thus, because the *Advanced Bionics* factors are met, §325(d) should additionally bar reconsideration of the Spenser II combinations.

C. The "Spacing" Limitations (Claims 2, 17-18).

As discussed in Section III.B., *supra*, the prosecution history conclusively demonstrates that Spenser II does not satisfy the spacing limitations and, moreover, the Board should not revisit the issue under §325(d). If any more is needed,

Petitioner further fails to prove that its Spenser II combinations satisfy the spacing limitations.

1. Petitioner's Inherency Arguments Fail.

Petitioner does not argue that there is any express disclosure of "spacings extending through a thickness" of Spenser II's compressible material to or through the frame. Pet., 49-50 (claim 2), 73-75 (claim 17), 75-76 (claim 18). Petitioner instead contends that "***POSITAs would have understood*** that 'the surface of the material' or base layer (e.g., second plurality of fibers) ***would*** define spacings extending through a thickness of the fibers created by a distance between adjacent fibers for several reasons." Pet, 48; *see also id.*, 49 ("***POSITAs also would have understood that in a porous material***, such as Spenser II's compressible material, ***spacings would necessarily exist*** between the fibers of the material formed by distances between the adjacent fibers."), 73-76.

Arguments about what a POSITA supposedly "would have understood" are not about what Spenser II expressly discloses, but rather lie in inherency. *Microsoft Corp. v. Biscotti, Inc.*, 878 F.3d 1052, 1066 (Fed. Cir. 2017) (statements that "a [POSITA] would understand the [evidence] as disclosing [the limitation]" could support an argument that a limitation was "inherently disclose[d] …"). Demonstrating obviousness by inherency is a "high standard" and requires a showing that the limitation "***necessarily*** must be present." *Par Pharm,, Inc. v. Twi*

Pharms., Inc., 773 F.3d 1186, 1195-6 (Fed. Cir. 2014).

Petitioner, however, falls well-short of demonstrating such spacings are "necessarily" present in the "base layer" of Spenser II's compressible material. As Dr. Brecker explains:

> Compressible material 256 is described as a "layer," "sleeve," "cloth," or "fabric." No mention is made of any "spacings," much less within a "base layer" that extend to the frame. Nor is the presence of such "spacings" suggested by Spenser II's Figure 22, which depicts a thick, opaque, seal without any spacings within the base layer:

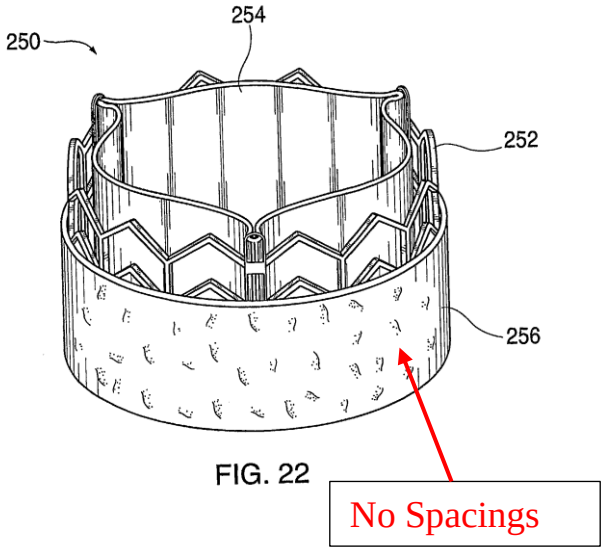

> Moreover, even if some "spacings" were imagined in the base layer, we cannot even see the inner surface of the base layer that is in contact with the frame. This side of the compressible material is neither shown nor described. Thus, we cannot assume that any imagined "spacings" would also "extend" to the frame or through the cells of the frame as claims 2, 17 and 18 require.

> Indeed, as the Board has found, "Spenser II's description of a fabric or cloth compressible material suggests a similar outer graft covering" to Levi's "***densely woven*** outer PET skirt." IPR2022-00556, Paper 10 (Inst. Dec.), 47 (PTAB Sept. 8, 2022); Ex. 1120 [-00034IPR-FWD] 47 (similar); Ex. 2124 [-00556FWD] 37 (similar). Quite simply, Spenser II's Figure 22 and description thereto provide no basis to conclude that "spacings" extending through a thickness of an "inner cloth" or "base layer" of Spenser II's compressible material are "necessarily present."

Ex. 2002 [Brecker-Decl.] ¶¶50-52.

Petitioner's and Dr. Buller's opposite conclusion does not pass muster. Here, Petitioner's analysis is based upon the unsubstantiated premise that Spenser II's compressible material is a "porous material" in which "spacings would necessarily exist." Pet., 50. But, the "compressible material" is not described as being "porous," and, instead, the Board approvingly cited Dr. Brecker's description of Spenser II's compressible material as a "solid, non-porous, graft covering." Ex. 2124 [-00556FWD] 33-34 (quoting Ex. 2103 [Brecker-556-Decl.] ¶160); Ex. 1120 [-00034FWD] 44 (similar). And Dr. Buller similarly testified that the compressible material would be "***sufficiently dense*** to prevent blood from leaking through the cloth/fabric." Ex. 2128 [Buller-556-Decl.] ¶222. Petitioner, moreover, proposed claims in Spenser II's European prosecution requiring that

"the compressible material is a fluid impermeable membrane." Ex. 2040 [Spenser-II-European-Proceeding] 2087-2093.

And, if such spacings were "necessarily" present, they would be present in similar valves. But they are not. Walther, a real-world embodiment of Spenser II, and other 9000MIS valves do not show any "spacing" extending through the outer cloth to the frame, much less one extending through a "base layer." Ex. 2002 [Brecker-Decl.] ¶54. Dr. Buller testified that he could not see any openings in the back of Walther's outer cloth:

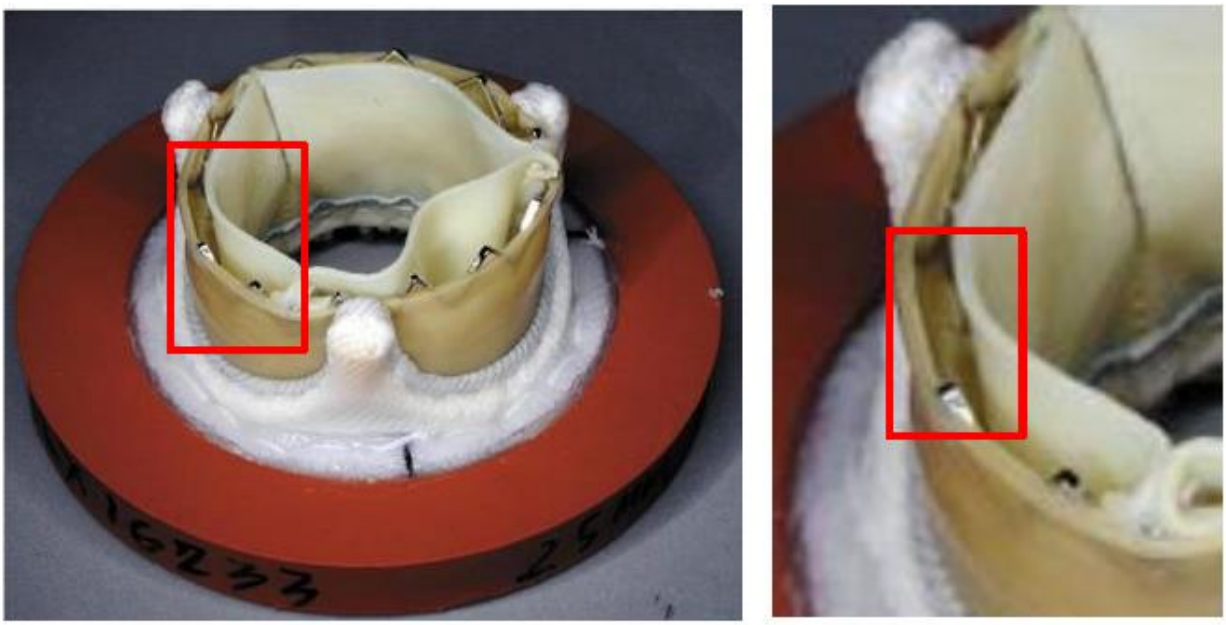

Fig. 2. Cloth THV valve deployed in surgical valve.

Ex. 1007 [Walther], 1121, Fig. 2 (annotated); Ex. 1128 [Buller-556-Depo.] 70:22-71:5. Additionally, the outer cloth's inner surface is clearly visible in other

9000MIS valves, Cheung and Apogee, and yet, no “spacings” are visible there either:

Cheung	**Apogee**
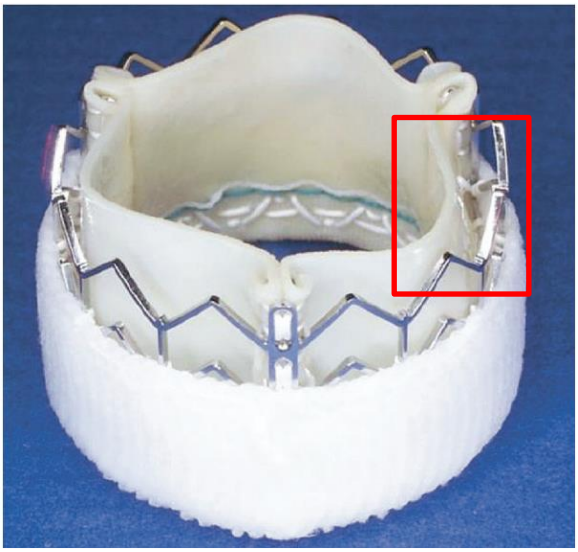	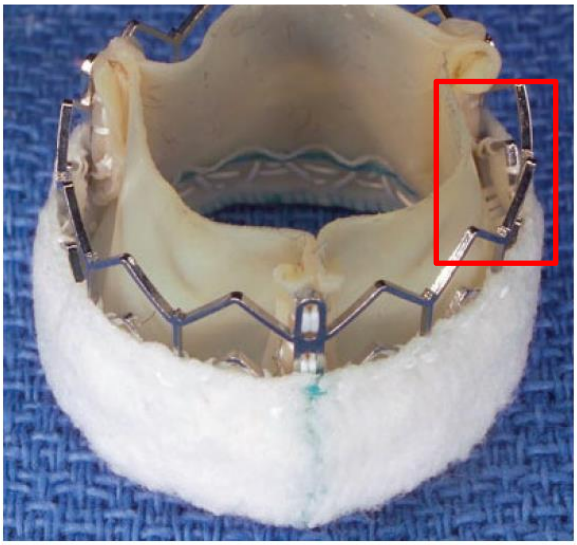 Apogee Gen 1b Greinecker 041305 at EDWARD

Ex. 1017 [Cheung] Fig. 2; Ex. 2087 [PICs] 7; Ex. 2052 [Buller-00034-Depo.] 200:11-14 (Cheung "look[s]…very similar" to Walther); Ex. 2103 [Brecker-556-Decl.] ¶60 ("Like Cheung, Apogee's cloth resembles Walther's cloth."); Ex. 2002 [Brecker-Decl.] ¶54; *see also* Ex. 2087, 2.

2. Dr. Buller's Proffered Reasons Do Not Remotely Show That Spenser II's Compressible Material Necessarily Has "Spacings" That Extend Through To The Frame.

Ignoring the foregoing, Petitioner contends that the compressible material "***must have spaces***" to "compress," "fill[] the gaps" between the frame and native tissue, and "encourage the coagulation of blood." Pet., 47-50 ("the spaces ***would need to exist***"); Ex. 1003 [Buller-Decl.] ¶¶162-166. Dr. Buller further contends that these alleged "spacings" "are necessary" for the material to "serve [its] stated purpose[]" of "promot[ing] tissue ingrowth." Ex. 1003 [Buller-Decl.] ¶165. But, as discussed below, none of these contentions prove that a "spacing extending through a thickness" of Spenser II's compressible material's base layer "to the frame" is ***necessarily*** present.

Petitioner presents no evidence that a "spacing extending through a thickness" of Spenser II's "base layer" "to the frame" is ***required*** for Spenser II's material to be compressible, "fill[] the gaps," encourage blood coagulation or promote tissue ingrowth. Certainly, this is not suggested by Petitioner's real-world products. Walther's outer cloth "promotes tissue ingrowth," "fill[] little gaps,"

and, per Petitioner, is "highly compressible" and "clots" blood. *See* Ex. 1007 [Walther] 1, 7; IPR2022-00556, Paper 22 (Reply) 8 ("Walther's outer cloth is highly compressible"); Ex. 1128 [Buller-556-Depo.] 72:8-9 ("blood clots" in Walther's outer cloth). Yet, neither Walther nor other 9000MIS valves Cheung and Apogee reveal any "spacing" extending through a "base layer," much less one further extending "to the frame" or "through the cells of the frame." *See* Section III.B; Ex. 2002 [Brecker-Decl.] ¶56.

Additionally, Spenser II's compressible material (and Walther's outer cloth) are designed to prevent paravalvular ***leakage***. Ex. 1011 [Spenser-II] ¶145; Ex. 1007 [Walther] 1. To achieve this end, per Dr. Buller, POSITAs would understand the material would be "sufficiently dense" to prevent blood from leaking through the cloth. Ex. 2128 [Buller-556-Decl.] ¶222. Accordingly, Spenser II addresses PVL via a "solid, non-porous, graft covering." Ex. 2124 [-00556FWD] 33-34 (quoting Ex. 2103 [Brecker-556-Decl.] ¶160); *see also* Ex. 1120 [-00034FWD] 44 (similar); Ex. 2040 [Spenser-II-European-Proceeding] 2087-2093 (proposing claims requiring the compressible material to be "a fluid impermeable membrane.").

Petitioner further contends that the compressible material's base layer "must have spaces" to prevent "the entire material" from bunching when crimped. Pet., 49. Previously, however, Petitioner denied the existence of bunching in Spenser II.

See IPR2021-01584, Paper 27 (Reply), 10-11 ("PO has failed to show that the alleged 'bunching' ... would occur with the compressible PET cloths in ... Spenser II..."); IPR2021-01527, Paper 28 (Reply), 9-11 (same); IPR2022-00034, Paper 28 (Reply), 9-11; IPR2022-00193, Paper 28 (Reply) 20. Nor is there any reason to assume Spenser II presents some unmentioned solution to bunching when it says nothing of the sort and particularly when such bunching is clearly present in Petitioner's 9000MIS Apogee device.

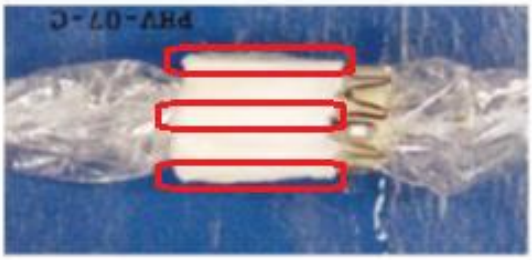

Ex. 2087 [PICs] 6 (annotated); Ex. 2002 [Brecker-Decl.] ¶58.

Further, as Dr. Brecker explains:

> The goals Dr. Buller posits—filling gaps, encouraging blood coagulation, and promoting tissue ingrowth—are each addressed via the fibers that extend from the compressible material. The extending fibers "fill the gaps between the stented valve and the surrounding tissue" and, "[a]ccordingly, the compressible material creates a mechanical seal that prevents paravalvular leakage." Ex. 1011 [Spenser-II] ¶145. Spenser II tells us directly that it is "the fibers" that "encourage coagulation of blood to further fill the gaps and prevent

> leakage." *Id.* Further, a growth factor may be applied "along the outer surface of the compressible material," *i.e.*, where the extending fibers are, and may promote tissue ingrowth on the outer side of the valve where the cloth attaches to the vessel wall. *Id.*, ¶¶145, 55. This is consistent with Dehdashtian's teaching that extending fibers facilitate tissue ingrowth. Ex. 2101 [Dehdashtian] 3:7-16, 3:37-41 (describing a graft with floaters that "promote tissue ingrowth where they are placed along the exterior of the graft body"). Dehdashtian, notably, appears to be the inventor who contributed Figure 22 to Spenser II.

Ex. 2002 [Brecker-Decl.] ¶59; *compare* Ex. 2102 (listing Spenser, Benichou and Bash as inventors) *with* Ex. 1011.

Petitioner and Dr. Buller further point to disclosures in various exhibits speaking to the compressible nature of certain knitted grafts,[2] or indicating that one

---

[2] In claim 2, Petitioner's argument is rooted in Spenser II being a "knit," which is inconsistent with its claim 1 argument regarding Spenser II disclosing a "mesh." Pet., 47-48, 73, 75-76. Petitioner does not argue that any alleged "mesh" would satisfy the "spacings" limitations. Instead, Petitioner makes arguments about Spenser II being "knitted." Thus, Petitioner's statement about a "mesh" is irrelevant to claim 2. It is also false. There is no disclosure of a "mesh" in Spenser II, nor is one depicted in Figure 22. Dr. Buller, moreover, identified the

of many "factors" in determining compressibility may be the porosity of a graft's ground layer. *See, e.g.*, Pet., 49. These documents, however, are irrelevant. Ex. 2002 [Brecker-Decl.] ¶60. Dr. Buller previously testified that Spenser II discloses a "velour-like woven PET" and, thus, per Dr. Buller, no "knit" of any sort is necessarily present. Ex. 2008 [-00193-Buller-Decl.] ¶308; Ex. 2128 [Buller-556-Decl.] ¶222 ("any woven fabric, including Spenser II's PET cloth/fabric…"). Although Dr. Buller now contends that Spenser II's cloth ***may*** be knitted, he does not contend that any such supposed knitted cloth would ***necessarily*** have the claimed "spacings." *See* Ex. 1003 [Buller-Decl.] ¶¶160-161. To the contrary, he testified that POSITAs would understand that Spenser II's compressible material would be "sufficiently dense" to prevent blood leakage. Ex. 2128 [Buller-556-Decl.] ¶222.

Petitioner asserts that "the prior art disclosed methods of coating [porous] cloths/fabrics with nonporous substances, such as a collagen or rubber coatings, to reduce the[ir] permeability…" Pet., 50. Dr. Buller further testifies that "Spenser II

---

compressible material as "velour-like woven" (Ex. 2008 [Buller-00193-Decl.] ¶305) or "knitted" PET (Ex. 1003 [Buller-Decl.] ¶162; Ex. 2134 [Buller-556-Reply-Decl.] ¶56), not as a "mesh." Ex. 2002 [Brecker-Decl.] ¶61.

does not teach or suggest coating the compressible material with collagen, rubber, or any other nonporous material," which would allegedly lead a POSITA to understand that the compressible material "must" have spacings. Ex. 1003 [Buller-Decl.] ¶166. This is absurd. One cannot infer an element is "necessarily" present based upon a nondisclosure and, moreover, Dr. Buller does not explain why such a redundant coating would be necessary given that the compressible material is already "sufficiently dense" to prevent blood leaking and a "fluid impermeable membrane." Ex. 2128 [Buller-556-Decl.] ¶222; Ex. 2040 [Spenser-II-European-Proceeding] 2087-2093. The statement is also false on its face as Spenser II discloses that "a tissue growth factor may be applied to the compressible material for promoting the growth of tissue into the material, thereby further sealing the gaps [between the stented valve and the surrounding tissue]." Ex. 1011 [Spenser-II] ¶¶145, 55; Ex. 2002 [Brecker-Decl.] ¶62.

D. "Free Of A Non-Porous Graft Covering" (Claim 9).

Claim 9 requires that the "prosthetic heart valve is free of a non-porous graft covering between the first plurality of fibers and the frame and the second plurality of fibers and the frame." Ex. 1001 ['834-Patent] cl. 9. Petitioner argues that this limitation is met by Spenser II's compressible material. Pet., 60.

The Board has twice decided that Petitioner failed to prove that Spenser II is "free of" a "graft covering" of any kind. *See* Ex. 2124 [-00556FWD] 29-30; Ex.

1120 [-00034FWD] 40; Ex. 2047 [-00034Pet.] 58; Ex. 2129 [-00556Pet.] 75-76, 98-99; Ex. 2132 [’846] cl. 1; Ex. 2133 [’236] cl. 1. The Board construed an “outer graft covering” to be “a structure, such as a cloth, fabric or other material, that covers all, or part of” both “the struts and members” and “the open spaces, or interstices” of the frame. Ex. 2124 [-00556FWD] 29-30; Ex. 1120 [-00034FWD] 40. Applying this construction, the Board rightly found that Spenser II’s compressible material includes and, therefore, is not “free of” a graft covering:

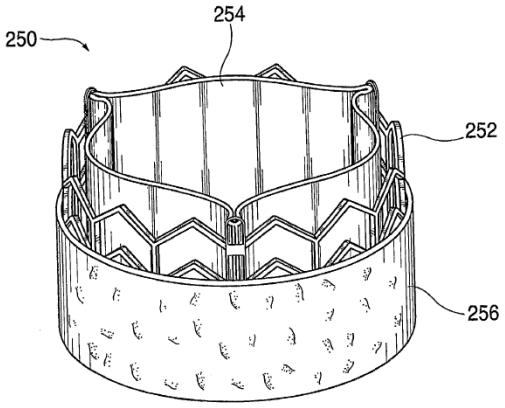

FIG. 22

Ex. 1011 [Spenser-II] Figure 22. As the Board explained, “a person of ordinary skill in the art would have recognized that the sleeve-like cloth or fabric of Spenser II corresponds to an outer graft covering...” Ex. 2124 [-00556FWD] 38; Ex. 1120 [-00034FWD] 48 (same).

Following the Board's decision in the -00034, Dr. Buller accepted the Board's construction. Ex. 2122 [Buller-556-Reply-Depo.] 11:5-8 ("Q. Do you agree with [the Board's] construction? A. Yes, I accept it. Absolutely … I accept that construction"), 10:9-11:4. Applying that construction, Dr. Buller agreed that Figure 22 "would not fall within the claim terms as the Board have now defined it." *Id.*, 13:22-14:5.

Here, Petitioner similarly fails to prove that Spenser II is "free of a ***non-porous*** graft covering." Ex. 1001 ['834-Patent] cl. 9. The Board previously credited Dr. Brecker's description of Spenser II as disclosing a "solid, ***non-porous, graft material***." Ex. 2124 [-00556FWD] 33-34 (quoting Ex. 2103 [Brecker-556-Decl.] ¶160); *see also* Ex. 1120 [-00034FWD] 44 (similar). Dr. Buller similarly testified that Spenser II's compressible material, would be "sufficiently dense to prevent blood from leaking through the cloth/fabric." Ex. 2128 [Buller-556-Decl.] ¶222. Dr. Buller further admitted that in the context of the '236 patent's specification (identical to the '834's), "nonporous" means "impermeable to fluid." Ex. 2122 [Buller-556-Reply-Depo.] 20:2-21:3. Thus, a cloth sufficiently dense to prevent blood leakage would be "impermeable to fluid" and, in Dr. Buller's understanding, constitute a "nonporous, graft covering." Similarly, Petitioner confirmed the "compressible material is a fluid impermeable membrane" in prosecution. *See* Ex. 2040 [Spenser-II-European-Proceeding] 2087-2093.

Nor does Spenser II suggest the compressible material is porous or permeable to fluid. To the contrary, the compressible material is specifically designed "to reduce or prevent paravalvular leakage." Ex. 1011 [Spenser-II] ¶145. There is, consequently, nothing in Figure 22 or its description to suggest the compressible material is "porous." As Dr. Brecker explains:

> Spenser II's compressible material (*i.e.*, "graft covering") is designed to "reduce or prevent" PVL, and is further described as a "sleeve" or "layer." Ex. 1011 [Spenser-II] ¶145. A "sleeve," particularly one designed to reduce or prevent PVL, is tight-fitting and is consistent with what we see in Figure 22:
>
> 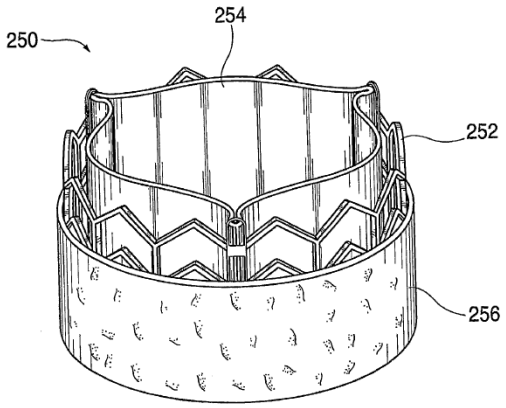
>
> FIG. 22
>
> *Id.*, Fig. 22. I agree with Dr. Buller's testimony that POSITAs would understand that the compressible material would be "sufficiently dense" to prevent blood from leaking because that is its principal purpose. This indicates a "non-porous graft covering," which POSITAs would have favored as a solution to prevent PVL.

> Nor is there anything about the materials used in the compressible material that would suggest it is porous. Spenser II teaches that the compressible material is "prefer[ably] ... formed of polyethylene terephthalate (PET)," a type of polyester. But a PET layer as depicted in Figure 22 would not be suggestive of a "porous" covering. Indeed, the '834 repeatedly describes standard polyester, low-profile polyester, and ePTFE as "covering materials" that "prevent[] blood from passing through the [] surface." Ex. 1001 ['834] 7:30-36, 8:51-55, 9:35-38; 13:35-38, 13:61-67, 15:60-65, 17:6-10, 19:17-20.

Ex. 2002 [Brecker-Decl.] ¶¶71-72.

Petitioner's argument here should further be barred by collateral estoppel. "It is well established that collateral estoppel applies to IPR proceedings." *Google LLC v. Hammond Dev. Int'l, Inc.*, 54 F.4th 1377, 1381 (Fed. Cir. 2022); *M2M Sols. LLC v. Amazon.com, Inc.*, 2023 U.S. App. LEXIS 4053 at *10-11 (Fed. Cir. Feb. 22, 2023). Collateral estoppel applies where (1) the issue is identical to one decided in the first action; (2) the issue was actually litigated in the first action; (3) resolution of the issue was essential to a final judgment in the first action; and (4) the party against whom collateral estoppel is being asserted had a full and fair opportunity to litigate the issue in the first action. *Google*, 54 F.4th at 1381 (quoting *In re Freeman*, 30 F.3d 1459, 1465 (Fed. Cir. 1994)).

These elements are easily met. First, while claim 9 introduces the word "non-porous" into the "free of an outer graft covering" limitation, that distinction is immaterial here as described above. *See also Ohio Willow Wood Co. v. Alps South, LLC*, 735 F.3d 1333, 1342 (Fed. Cir. 2013) (collateral estoppel applies where "differences between the unadjudicated … and adjudicated patent claims do not materially alter the question of invalidity"); *Rimfrost AS v. Aker BioMarine Antarctic AS*, IPR2018-01730, Paper 35, 21-24 (Mar. 6, 2020) (similar). Second, the issue was actually and thoroughly litigated, where a central dispute was whether Spenser II disclosed or rendered obvious the "free of an outer graft covering" ("FOG") limitation. *See*, *e.g.*, Ex. 2047 [IPR2022-00034-Petition] 58, 85-86; Ex. 2108 [IPR2022-00034-Reply] 19-21; IPR2022-00034, Paper 24 (POR), 67-71, 81-89; Paper 36 (Sur-Reply) 19-22; Ex. 2129 [IPR2022-00556-Petition] 75-76, 97-99; Ex. 2130 [IPR2022-00556-Reply] 19-22; IPR2022-00556, Paper 18 (POR), 35-41; Paper 27 (Sur-Reply) 1-10. Third, the Board's determination that the FOG limitation was not met was "dispositive" in both proceedings and, thus, essential to both judgments. Ex. 2124 [-00556FWD] 16; Ex. 1120 [-00034FWD] 15. Fourth, as discussed, Petitioner had a full and fair opportunity to litigate the issue, arguing the FOG limitation throughout both proceedings. Thus, the four elements for collateral estoppel are met and Petitioner should not be heard to reargue that Spenser II is free of a graft covering, nonporous or otherwise.

The Board, moreover, "cautioned" the parties "against raising issues … that have previously been heard and decided by the Board in the related cases" as "the doctrine of the law of the case generally bars retrial" of previously resolved issues. -00556, Paper 30 (Order Setting Oral Argument) 2-3 (citing *Intergraph Corp. v. Intel Corp.*, 253 F.3d 695, 697–98 (Fed. Cir. 2001); MPEP §706.07(h)(XI)(A) ("a Board decision in an application is the 'law of the case,' and is thus controlling in that application and any subsequent, related application"). The Board noted that "[e]xceptions to this doctrine apply only if: (1) new and materially different evidence is relied upon in the subsequent appeal; (2) an intervening change of controlling legal authority occurred; or (3) the earlier ruling was clearly erroneous and would work a manifest injustice." -00556, Paper 30 (Order Setting Oral Argument) 2-3 (citing *Intergraph*, 253 F.3d at 698 (Fed. Cir. 2001)). Clearly, none of these exceptions apply, as Spenser II's compressible material was repeatedly found to "correspond to an outer graft covering," no intervening change of legal authority has been presented, and Dr. Buller has accepted the Board's construction, which, furthermore, was correctly applied to Figure 22. Ex. 2122 [Buller-556-Reply-Depo.] 11:5-8, 10:9-11:4, 13:22-14:5.

Thus, Petitioner fails to show that Spenser II discloses or renders obvious the "free of a non-porous graft covering" limitation.

IV. PETITIONER'S CHUTER COMBINATIONS FAIL (GROUNDS 3-6, ALL CLAIMS).

Grounds 3-6 (the Chuter grounds/combinations) propose combining Chuter with Spenser I's or Levi's frame. Each Chuter ground relies in the alternative on two distinct Chuter embodiments. The first concerns Chuter's graft embodiment featuring a fabric pile backing. *See, e.g.*, Pet, 84-85. The second concerns Chuter's occluder embodiment without a backing layer where fibers are secured between twisted strands of a helically wound wire stent. *See, e.g.*, *id.*, 86. Petitioner, however, fails to demonstrate that any of the Chuter grounds render any claim obvious under either embodiment.

A. Petitioner Fails To Show That Its Chuter Backing Combinations Render The Claims Obvious.

With respect to Chuter's stent graft embodiment, Petitioner identifies Chuter's individual fibers 19 that extend away from the frame as the "first plurality of fibers" and the fabric pile backing layer 16 (or "backing layer," per Petitioner) from which they extend as the "second plurality of fibers." Pet., 80-87. Petitioner's annotation of Chuter's Figure 2 is below:

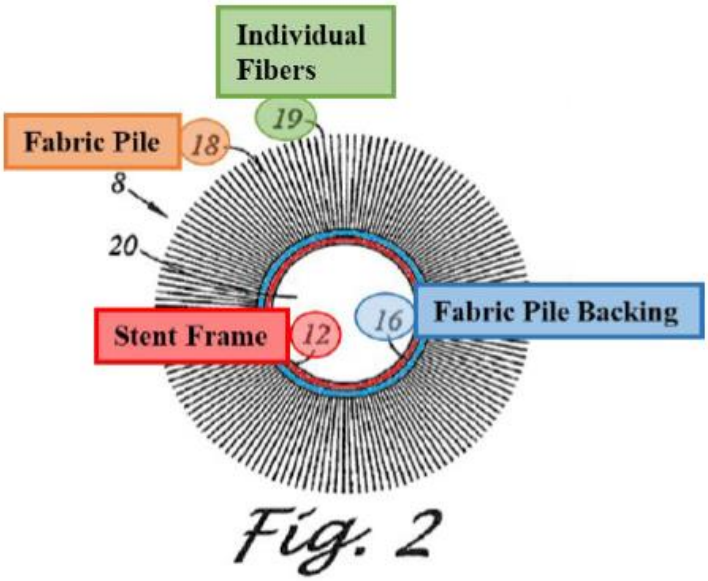

Pet., 80; Ex. 1116 [Chuter] Fig. 2.

Chuter, however, does not disclose or depict any "spacings" extending through its fabric pile backing (shaded blue above), and Petitioner fails to show such "spacings" are disclosed or rendered obvious (claims 2, 17-18). Section IV.A.1. If more is needed, Chuter's fabric pile backing is a tight outer seal of the sort distinguished in prosecution as lacking "spacings" (claims 2, 17-18). Section IV.A.2. Petitioner, moreover, fails to show that Chuter's fabric pile backing is free a "non-porous graft covering" (claim 9). Section IV.A.3.

1. <u>The "Spacing" Limitations (Claims 2, 17-18).</u>

Claims 2, 17 and 18 each require certain "spacing" limitations. Claim 2 requires that "the second plurality of fibers defines a ***spacing*** extending through a thickness thereof that is created by a distance between adjacent fibers, wherein the

spacing extends to the frame." Ex. 1001 ['834 Patent] cl. 2. Claim 17 requires a "spacing … created by a distance between adjacent fibers" of each of the first and second pluralities, "extending through a thickness thereof" and "the plurality of cells of the frame." *Id.*, cl. 17. Claim 18 similarly requires a "spacing" through a "plurality of fibers" that "extend[s] through a thickness thereof" and the "plurality of cells of the frame." *Id.*, cl. 18.

Chuter's fabric pile backing layer (allegedly the "second plurality of fibers") is sandwiched between the frame and the individual fibers 19 (the alleged "first plurality of fibers"), as shown in Petitioner's annotated Figure 2:

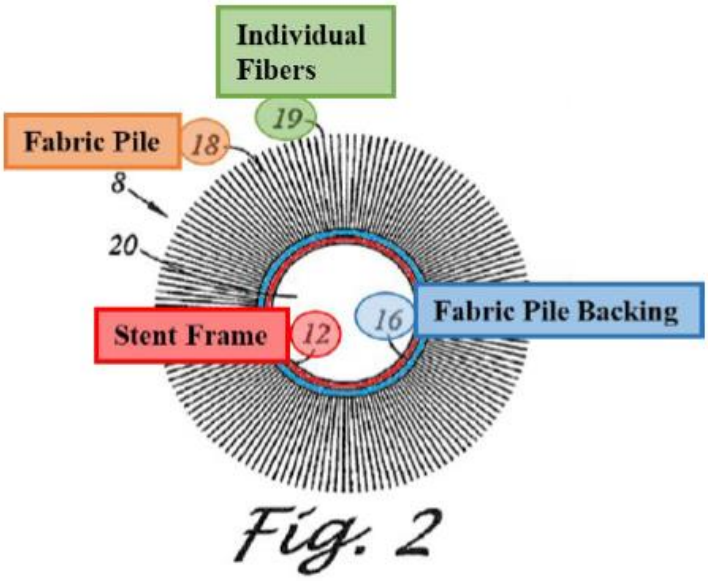

Pet., 80; Ex. 1116 [Chuter] Fig. 2. Because each of claims 2, 17 and 18 require "spacings" that extend either "to the frame" or "through the ... cells of the frame," Chuter must disclose or render obvious a "spacing" extending through at least the

fabric pile backing to the frame to satisfy any of the "spacing" limitations. Petitioner, however, fails to prove that Chuter's fabric pile backing has ***any*** spacings, much less ones that extend through a thickness thereof to or through the frame.

Petitioner argues "POSITAS ***would have understood*** that … the fabric pile backing layer ***would preferably be porous*** to maximize the compressibility of the fiber pile." Pet., 87-88. Petitioner further contends that "***POSITAs would have … understood*** that Chuter's backing layer ***could have*** spaces creating a [] porosity," further alleging that "[s]uch materials were known in the art." *Id.*, 88. Again invoking what a POSITA allegedly "would have understood," Petitioner employs the language of inherency and does not argue that Chuter expressly discloses the "spacing" limitations. Petitioner concedes, however, that such spacings are not ***necessarily*** present, arguing instead that the "layer would ***preferably*** be porous" or "***could*** have spaces creating a .... porosity." *Id.*, 87-88. Even if, *arguendo*, a fabric pile backing "would ***preferably*** be porous" or "***could*** have" "spacings," this would only confirm that such spacings are not "necessarily" present, as inherency requires. *Par Pharm.*, 773 F.3d at 1195.

Nor does Chuter suggest any "preference" or capacity for the required "spacings." Chuter neither depicts nor describes any "spacings" extending through

its fabric pile backing, much less ones which extend to or through the frame. As Dr. Brecker explains,

> Chuter's fabric pile backing 16/16A clearly lacks "spacings" in the backing layer:

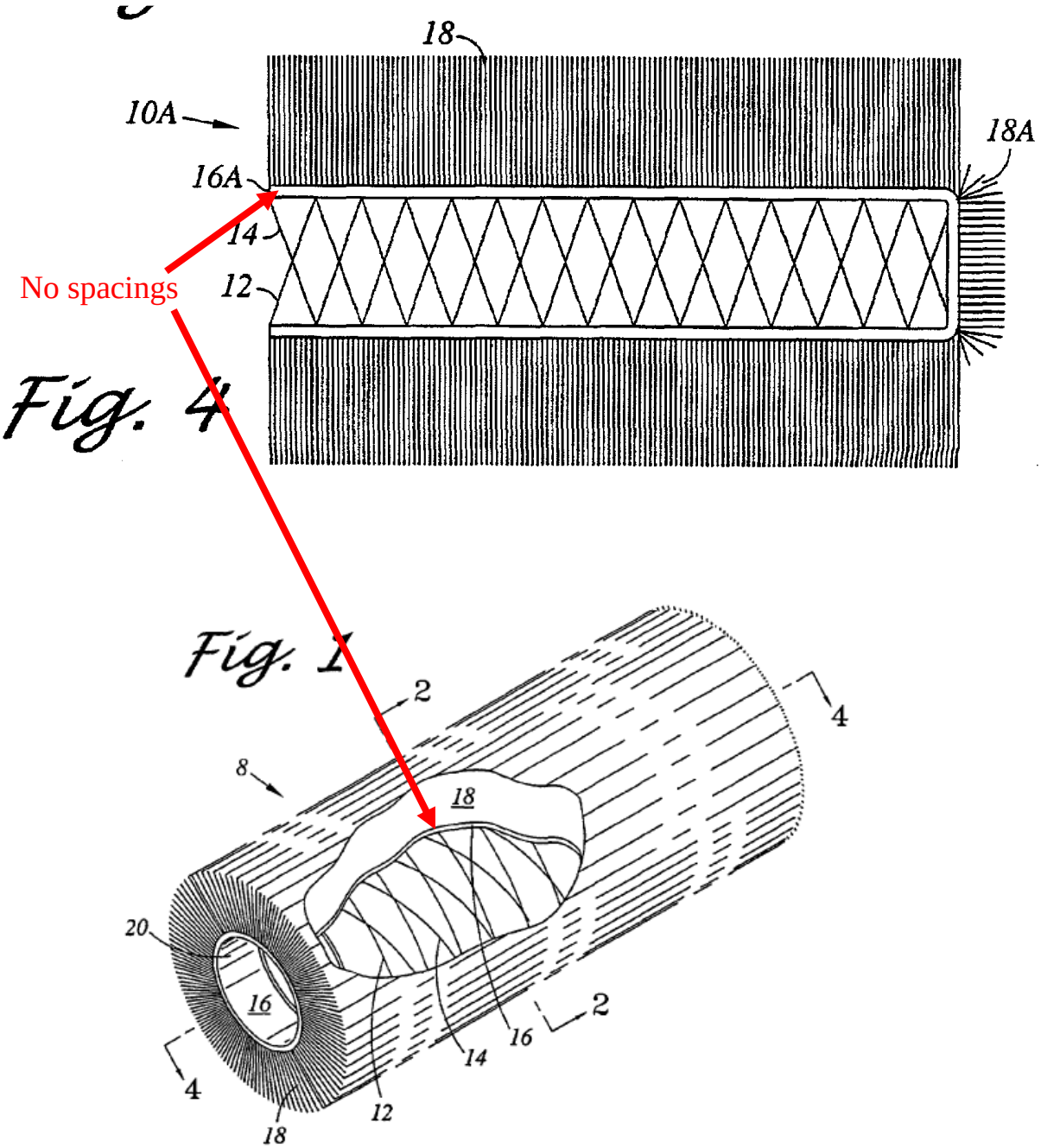

Ex. 1116 [Chuter] Figs. 1, 4. Nor are any spacings in the fabric pile backing described. To the contrary, Chuter describes these embodiments as a "graft pouch, sock or sleeve," mirroring Spenser II's description of its compressible material as a "sleeve." Ex. 1116 [Chuter] ¶25; Ex. 1011 [Spenser-II] ¶145. Chuter does not describe its fabric pile backing embodiments as "porous."

Thus, there is no reason to conclude, from Chuter's disclosure, that the fabric pile backing would "preferably" be porous or "could have" spacings. Chuter, if anything, discloses the absence of such spacings. Furthermore, even if we were to assume the existence of some "spacings" in Chuter's fabric pile backing, there is no indication that such "spacings" would "extend[] through a thickness" of the fabric pile backing "to the frame," or through the "the cells of the frame."

Rather, Chuter instead discloses that its fabric pile backing is used as either a stent graft or an occluder. Ex. 1116 [Chuter] ¶¶12-16, 25, 54-55, 64. Similar to TAVRs, which are designed to allow blood flow exclusively through the valve, stent grafts are designed to allow blood to flow only inside the channel formed by the inner surface of the stent. *Id.*, ¶54. Chuter teaches that stent grafts had the known requirement of "damming off or wall[ing] off" any "gap between the exterior surface of the stent-graft and the interior arterial wall" to prevent blood leaking therebetween. Ex. 1116 [Chuter] ¶9. Failure to do so "frequently leads to complications resulting either from clot formation in the gap which escape from the gap and enter the lungs or delamination of the interior arterial wall surface." *Id.*, *see also id.*, ¶4

(similar). Were there "spacings" extending through the fabric pile backing "to the frame," blood may leak therethrough into such "gap[s]." Accordingly, Chuter operates from the premise that stent grafts must prevent leaks through the wall of the graft (backing layer) when implanted.

Chuter also teaches its fabric pile backing being used in an occluder as a "pouch" or "sock" graft, which extends over at least one end of the stent to occlude—*i.e.*, prevent blood from passing through—the vessel:

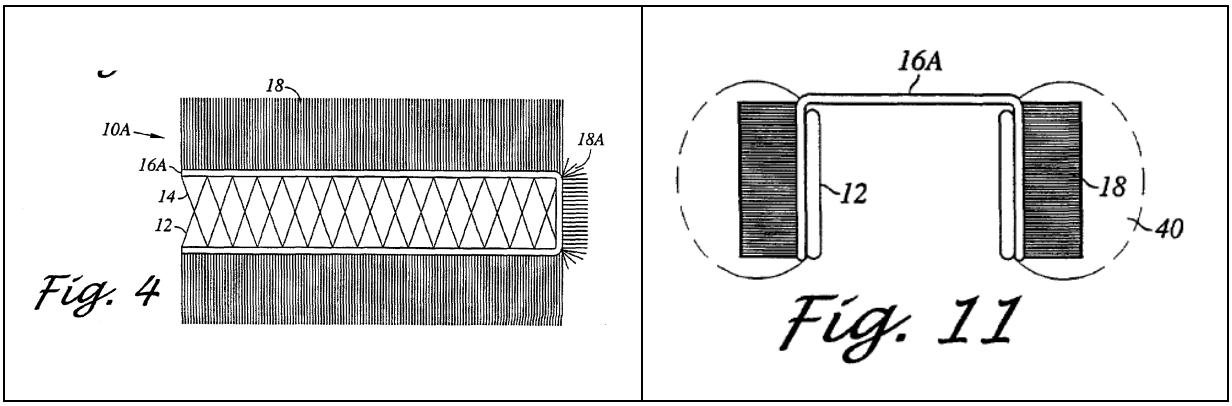

Id., Figs. 4, 11, ¶¶12, 25, 55. Because the fabric pile backing is utilized to occlude the blood vessel, this too further suggests that it is nonporous.

Additionally, Chuter teaches that its fabric backing layer may be polyester. *Id.*, ¶22. The '834, again, identifies "polyester" as a material that "prevents blood from passing through the [] surface." Ex. 1001 ['834] 7:30-36, 8:51-55, 13:35-38, 13:61-67, 15:60-65, 17:6-10, 19:17-20.

> Accordingly, Chuter's description and images indicate a similar nonporous, tight outer seal to Spenser II's compressible material. Certainly, Chuter neither teaches nor suggests any "spacings" extending through a thickness of its backing layer, much less ones further extending to or through the frame.

Ex. 2002 [Brecker-Decl.] ¶¶82-87.

Petitioner's argument that Chuter's fabric pile backing would "preferably" be porous or "could" have spacings seems to be an inchoate obviousness argument directed towards a missing limitation. The Federal Circuit, however, has established a rigorous framework for obviousness in the face of such a "missing limitation," particularly one that goes to the "heart of the invention." In *Arendi S.A.R.L. v. Apple Inc.*, 832 F.3d 1355, 1361-63 (Fed. Cir. 2016), reliance upon "common sense" to find a missing limitation is the "exception, rather than the rule" and is only suitable where "the limitation in question was unusually simple and the technology particularly straightforward." As the Federal Circuit cautioned:

> In cases in which "common sense" is used to supply a missing limitation ... our search for a reasoned basis for resort to common sense must be searching. And, this is particularly true where the missing limitation goes to the heart of an invention.

Id., 1363; *DSS Tech. Mgmt. v. Apple Inc.*, 885 F.3d 1367, 1374-75 (Fed. Cir. 2018) (rejecting "ordinary creativity" as a basis for overcoming a missing limitation); *K/S*

HIMPP v. Hear-Wear Techs., LLC, 751 F.3d 1362, 1366 (Fed. Cir. 2014) (rejecting "basic knowledge" as a basis for overcoming a missing limitation).

Petitioner's conclusion that Chuter would "preferably be porous" and "could have spaces creating a [] porosity" is, however, contrary to Chuter's teachings. As discussed, Chuter's fabric backing pile arises in the context of either a stent graft or wrapping around at least one open end of a stent to occlude a blood vessel. Ex. 1116 [Chuter] ¶¶12-16, 25, 54-55, 64. In a stent graft, the objective is to allow blood to flow only inside the channel formed by the inner surface of the stent, while occluders must plug the blood vessel. Ex. 2002 [Brecker-Decl.] ¶¶89, 104. In either context, Chuter's teachings indicate that the fabric pile backing would be nonporous to prevent blood from leaking therethrough. *Id.*

Petitioner's position that Chuter's backing layer would "preferably be" porous is further at odds with Dr. Buller's testimony that Spenser II's compressible material "would be sufficiently dense to prevent blood from leaking through the cloth/fabric." Ex. 2128 [Buller-556-Decl.] ¶222. Such density would not indicate "spacings," much less ones extending to or through the frame. Ex. 2002 [Brecker-Decl.] ¶89. Dr. Buller, however, does not explain why the proposed combinations would require Chuter's fabric pile backing to be less dense than the base layer of Spenser II's compressible material.

Petitioner, nevertheless, contends Chuter's backing layer would "preferably"

be porous to "maximize the compressibility of the fiber pile." Pet., 87-88. But, as Dr. Brecker explains:

> While a POSITA may be motivated to enhance compressibility, a POSITA would need to balance that interest against other considerations. Like Spenser II's compressible material, Chuter's stent graft is described as a "sleeve" and is designed to "permit blood flow" only through the channel along the inner surface of the stent. *See* Ex. 1116 [Chuter] ¶¶25, 54, 16, 4, 9. When combined with Spenser I or Levi, Chuter's backing layer would be "sufficiently dense" to prevent leaks. Ex. 2128 [Buller-556-Decl.] ¶222. While Chuter teaches that "compression compresses the stent and pushes down the fabric pile" when loaded into a delivery catheter, POSITAs would expect Chuter's graft and backing layer to remain "sufficiently dense" to prevent blood from leaking, not just through the wall of the graft, but also to prevent a leak between the graft and the vessel wall to avoid formation of dangerous clots as explained by Chuter, because that is its core function. *See* Ex. 1116 [Chuter] ¶¶4, 9. Accordingly, to the extent POSITAs would seek to "maximize" the fiber pile's compressibility, they would not do so by creating a porous backing layer.

Ex. 2002 [Brecker-Decl.] ¶89.

Petitioner further contends that Norris would inform POSITAs that Chuter's backing layer could be porous and "have spaces." Pet., 88; Ex. 1074 [Norris] 4:22-26. Specifically, Petitioner points to Norris's disclosure that in some embodiments "ground layer 20 can have a porosity that can provide some space into which the

loops 32 can be compressed." *Id.* This, however, is a *non sequitur*, and for numerous reasons. First, Petitioner does not attempt to show that Norris itself would satisfy the "spacing" limitations. No explanation is given for how, to the extent any spaces are present in Norris, such imagined "spacings" would extend through a thickness of the base layer either "to the frame" or through the "cells of the frame," as the claims require. Norris' statement is not directed to its ground layer's permeability, but simply as to whether the loops may be pushed into the ground layer when placed inside a delivery system, as shown in Norris' Fig. 2. Ex. 2002 [Brecker-Decl.] ¶92. Norris, however, does not show any spacings extending through the ground layer to or through the frame:

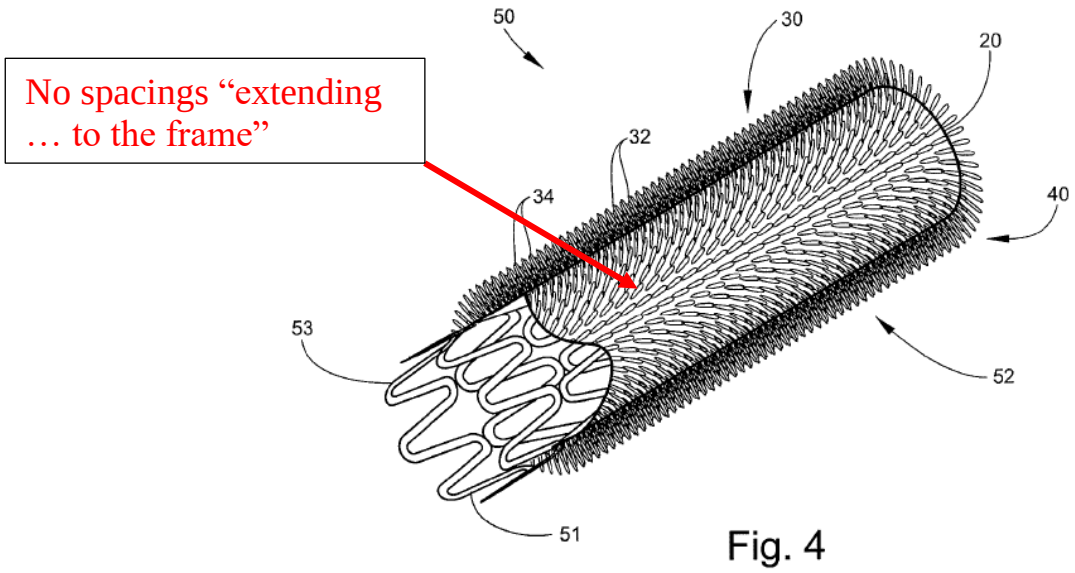

Ex. 1074 [Norris] Fig. 4. Notably, Norris' Figure 2, shows that no spacings in Norris's ground layer extend through to the frame:

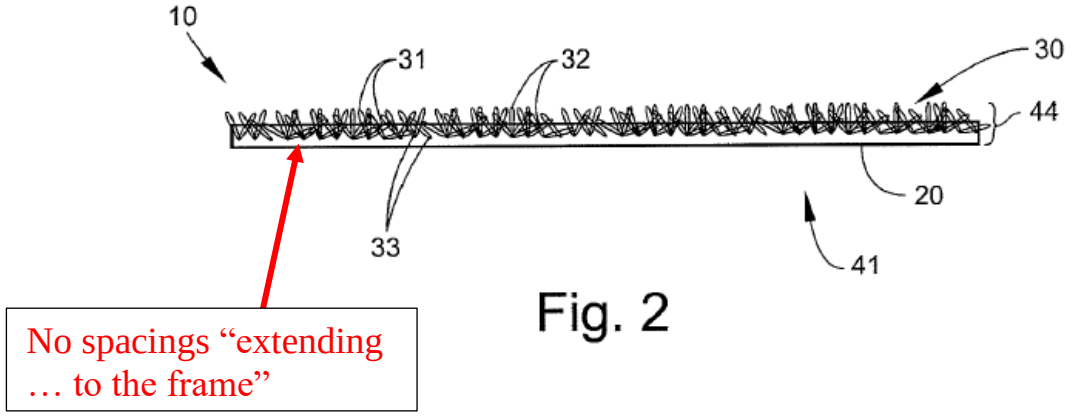

Fig. 2

Id., Fig. 2. To the contrary, Norris teaches knitting the ground layer "with a uniform density" so that "gaps and voids in the knit pattern ***can be avoided***." *Id.*, 4:64-67. Norris further teaches that "a tighter ground layer 20 can provide more densely positioned loops 32" creating benefits which "can be particularly useful in medical applications in which a device may not completely conform to the contours of an anatomical structure in which it is implanted." *Id.*, 7:10-25. This is exactly the circumstance that TAVRs encounter when sealing against the "highly irregularly shaped surface" of the native aortic valve. *See* Ex. 1003 [Buller-Decl.] ¶284 ("the diseased native leaflets of a patient's aortic valve would present a highly irregularly shaped surface due to calcium deposits on the leaflets.") Accordingly, while Petitioner contends that Norris would lead a POSITA to conclude that Chuter's graft could or would desirably have "spacings" extending through its fabric pile backing when combined with Spenser I or Levi, Norris

teaches doing the exact opposite; tightly knitting its ground layer so that gaps and voids "can be avoided." Ex. 2002 [Brecker-Decl.] ¶93.

Second, whatever is disclosed in Norris has no bearing upon what is disclosed in Chuter. To the extent Petitioner is arguing a POSITA would have modified Chuter in view of Norris, it should have added Norris to its combination. *RPX Corp. et al. v. Parity Networks, LLC*, IPR2018-00097, Paper 7, 14 (PTAB Apr. 24, 2018) ("Petitioner also cites to several other references ... but does not assert these references are part of the combination. Relying on knowledge in the art does not ... show a motivation to combine existing components in the manner claimed free of hindsight motivation.") (denying institution).

And third, Norris itself was expressly disclosed and discussed by the Applicant in prosecution. The Applicant presented Norris, as well as numerous other prior art stent grafts, in its discussion of the prior art. *See* Ex. 1002 ['834-FH] 1147. The Applicant, when discussing a claim limitation requiring "openings," distinguished the resulting "lower overall fiber density of the claimed invention" from that found "for example with a stent graft." *Id.*, 1139-40. These "openings" were further explained to avoid "the disadvantages associated with a stent graft such as restrained valve foreshortening, under expansion, and increased valve profile size." *Id.*, 1140. The Applicant further provided examples of such "stent grafts [that] have also been developed that include one or more seals,"

including Norris, which "teaches a stent graft with loops of outwardly extending material." *Id.*, 1146-47.

The above-referenced "openings" limitations were amended to the current claim language requiring a "spacing extending through a thickness" of one or two "pluralit[ies] of fibers" in response to the Examiner's rejections for lack of support in the specification for "openings" or "arrays of fibers." *Id.* 1032-1034, 1011-1015, 995-1002. The "spacings" limitations were, again, specifically identified by the Examiner—fully aware of Norris and other comparable stent grafts—in her reasons for allowance. *Id.*, 850.

2. <u>The Prosecution History Confirms That Chuter's Fabric Pile Backing Does Not Disclose Or Render Obvious The "Spacing" Limitations (Claims 2, 17-18).</u>

As discussed in Section III.A., the "spacing" limitations played a pivotal role in prosecution and were specifically cited by the Examiner in her reasons for allowance. Ex. 1002 ['834-FH] 850. Clearly, as can readily be seen below, Chuter's fabric pile backing 16/16A has no "spacings" whatsoever, much less ones remotely like the exemplary figures shown during prosecution:

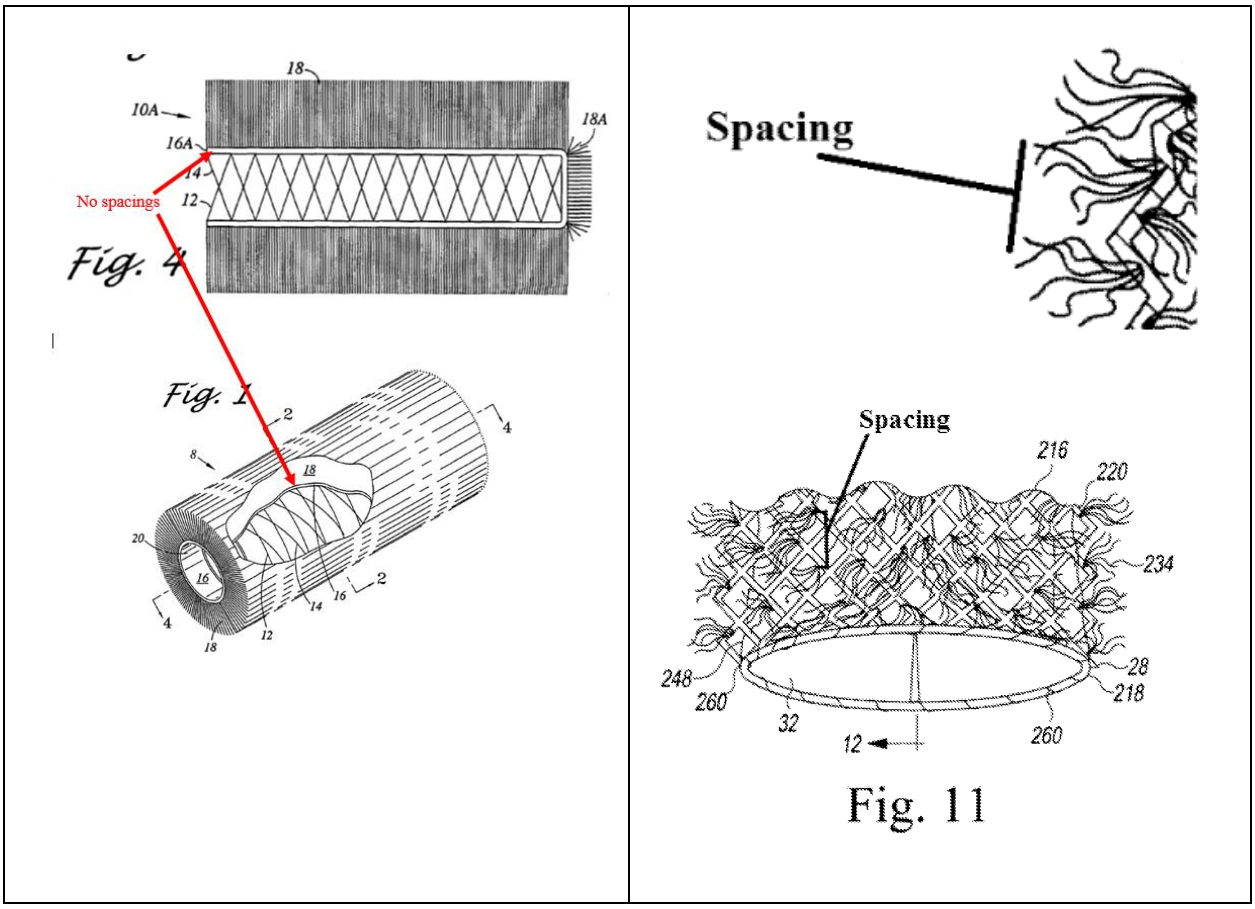

Ex. 1116 [Chuter] Figs. 1, 4; Ex. 1002 [’834-FH] 1001-2.

The Applicant, furthermore, expressly distinguished tight outer seals, including, *e.g.*, those disclosed by Spenser II and its “real-world embodiment” Walther, as lacking “spacings.” Ex. 1002 [’834-FH] 1001. As discussed in Section III.A, this statement disclaimed tight outer seals, like Spenser II’s compressible material, as not disclosing “spacings.” This disclaimer also applies to Chuter’s fabric pile backing, as Dr. Brecker explains:

> Chuter discloses embodiments comprising individual fibers extending outwardly from fabric pile backing 16 (“backing layer”):

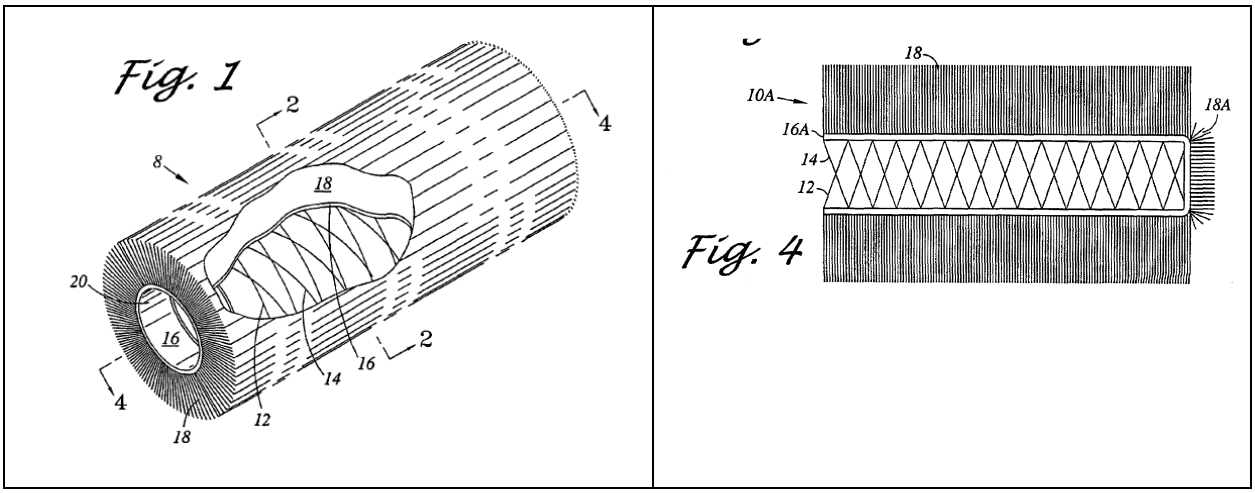

Ex. 1116 [Chuter] Figs. 1, 4, ¶¶54-55; *see also* Fig. 2. Chuter does not disclose or suggest any "spacings" extending through this backing layer, much less ones further extending to the frame. Rather, like Spenser II's Figure 22, Chuter's figures depict a tight outer seal without any "spacings":

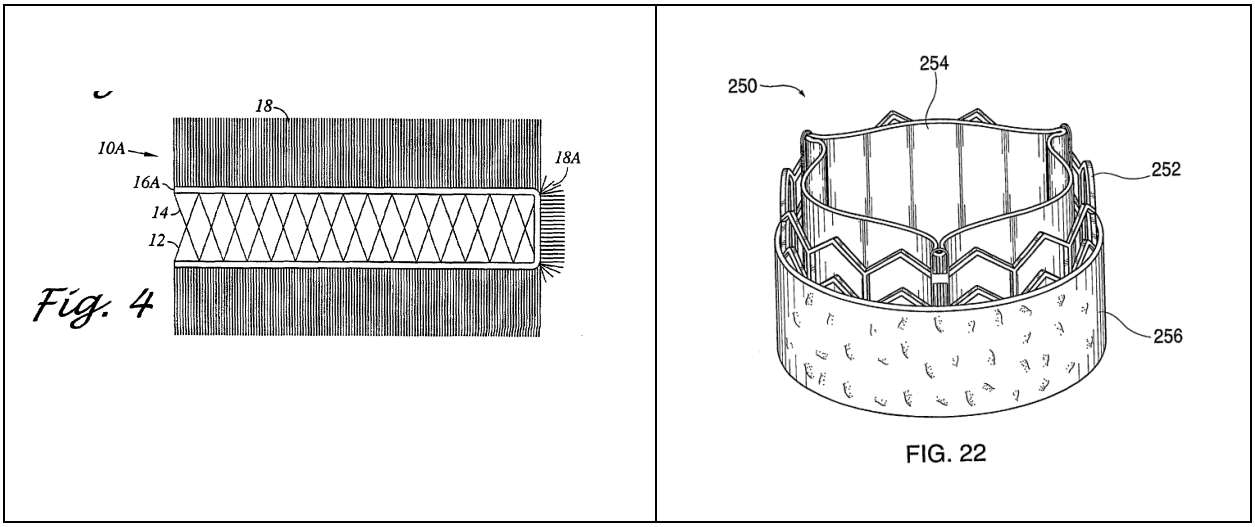

Certainly, neither Chuter's fabric pile backing layer nor Spenser II's compressible material show anything like the '834's figures identified as showing "spacings" in prosecution:

Chuter	Spenser II	’834
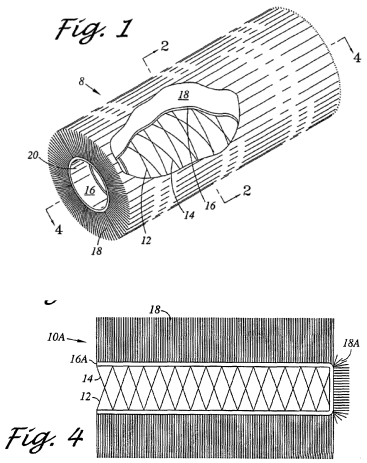	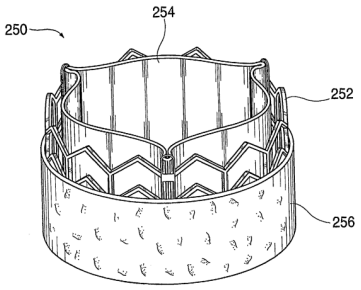	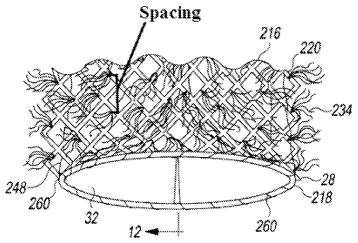

> Chuter’s description of its graft as a “sleeve” also mirrors the description of Spenser II’s compressible material as a “sleeve.” *Compare id.*, ¶25 (“[t]he stents of the present invention that employ a graft can extend the full length of the graft. The graft pouch, sock, or ***sleeve*** can extend beyond one end or both ends of the stent.”) *with* Ex. 1011 [Spenser-II] ¶145 (“[t]he [compressible] material may extend … entirely around the stent structure, such as in the form of a ***sleeve***.”). And, like Spenser II’s compressible material, POSITAs would expect Chuter’s fabric pile backing to be “sufficiently dense” to prevent blood leakage, particularly when added to the frames of Spenser I or Levi. *See* Ex. 2128 [Buller-556-Decl.] ¶222. Accordingly, both the depiction and description of Chuter’s “sleeve” graft indicates a similar tight outer seal to Spenser II’s compressible material.

Ex. 2002 [Brecker-Decl.] ¶96. Accordingly, Petitioner’s backing layer combinations rely upon exactly the sort of tight outer seal disclaimed in

prosecution.

Additionally, Petitioner's arguments under Chuter's fabric pile graft embodiments should be rejected under §325(d). As detailed in Section III.A, the Examiner allowed the claims in view of the "spacing" limitations and over Spenser II's compressible material. *See* Ex. 1002 ['834-FH] 1001-2. In view of the manifest similarities between Spenser II's compressible material and Chuter's fabric pile graft embodiment detailed above, "***substantially the same prior art or arguments*** previously were presented to the Office." *Becton, Dickinson & Co. v. B. Braun Melsungen AG*, IPR2017-01586, Paper 8, 17 (Dec. 15, 2017) (precedential); *Gator Bio, Inc. v. Sartorius Bioanalytical Instruments, Inc.*, IPR2023-00215, Paper 19, 14-17 (PTAB June 20, 2023) (finding reference which "does not disclose [the limitation] with any more precision or clarity" than reference considered in prosecution, where Petitioner's proposed combinations relied on either reference to satisfy the same aspects of the challenged claims); *Sonos, Inc. v. Google, LLC*, IPR2021-00963, Paper 9, 10-11 (PTAB Nov. 9, 2021) (finding reference not presented in prosecution "substantially the same" as reference presented prosecution and relied-upon in Petition, where Petitioner relied on both references as "teaching the same subject matter" and "combining with [primary reference] in the same manner").

If more is needed, the Applicant also distinguished additional prior stent

graft art that is also cumulative of Chuter's stent graft embodiment in connection with a claim limitation requiring "openings." Ex. 1002 [FH] 1139-1140. The Applicant distinguished the resulting "lower overall fiber density of the claimed invention" as avoiding "the disadvantages associated with a stent graft such as restrained valve foreshortening, under expansion, and increased valve profile size." *Id.*, 1140. The Applicant further explained that "[v]arious stent grafts have also been developed that include one or more seals," including Hartley which "teaches a velour band at a distal end of the stent graft" and Norris, which "teaches a stent graft with loops of outwardly extending material." *Id.*, 1146-47. Thus, Hartley and Norris were distinguished in prosecution and they, like Chuter, each teach a stent graft with fibers extending from the stent graft:

Hartley	Norris	Chuter
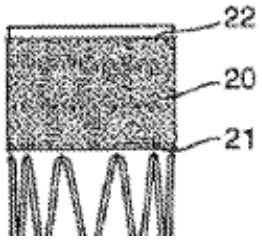	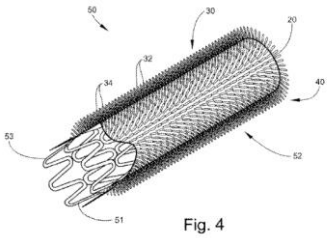	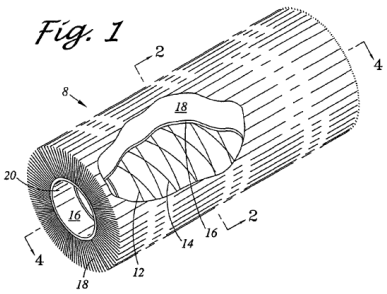

Id., 1146-8; Ex. 1116 [Chuter] Fig. 1; Ex. 2002 [Brecker-Decl.] ¶97.

This "openings" limitation, moreover, was amended to the current "spacings" limitation in response to the Examiner's rejections for lack of support

in the specification for "openings" or "arrays of fibers." *Id.*, 1032-1034, 1011-1015, 995-1002. The "spacings" limitations were, again, specifically identified by the Examiner in her reasons for allowance. *Id.*, 850. Accordingly, other stent grafts which, like Chuter's graft, featured outwardly-extending fibrous structures, were distinguished in prosecution as not disclosing "spacings."

As to the second *Advanced Bionics* prong, Petitioner has not demonstrated any material error by the Office. Petitioner makes no contention that Chuter is not cumulative of Spenser II, only that Chuter was not presented in prosecution. Pet., 98. But, as discussed, Chuter's backing layer and Petitioner's arguments that "spacings" therein are disclosed are cumulative of both Spenser II and the stent graft art distinguished in prosecution. Conclusively, Petitioner has not shown that the Examiner erred regarding Spenser II. *See* Section III.B. Thus, the *Advanced Bionics* factors are met, and §325(d) should bar reconsideration of the cumulative backing layer combinations.

3. <u>"Free Of A Non-Porous Graft Covering" (Claim 9).</u>

Claim 9 requires that the "prosthetic heart valve is free of a non-porous graft covering between the first plurality of fibers and the frame and the second plurality of fibers and the frame." Ex. 1001 ['834-Patent] cl. 9. As discussed, the Board has conclusively found that Spenser II's compressible material "corresponds to" an

"outer graft covering" and, therefore, does not meet the similar "free of an outer graft covering" limitations of the related '834 and '236 patents. *See* Section III.D.

The Board, again, construed an "outer graft covering" to mean "a structure, such as a cloth, fabric or other material, that covers all, or part of" both "the struts and members" and "the open spaces, or interstices" of the frame. Ex. 2124 [-00556FWD] 29-30; Ex. 1120 [-00034FWD] 40. Dr. Buller testified that he "[a]bsolutely ... accept[s]" the Board's construction. Ex. 2122 [Buller-556-Reply-Depo.] 11:5-8, 13:22-14:5 (agreeing Spenser II's Fig. 22 "would not fall within the claim terms as the Board have now defined it.").

Chuter clearly discloses a "graft covering" under the Board's construction. Chuter's pile fabric backing layer plainly covers the frame's struts and interstices:

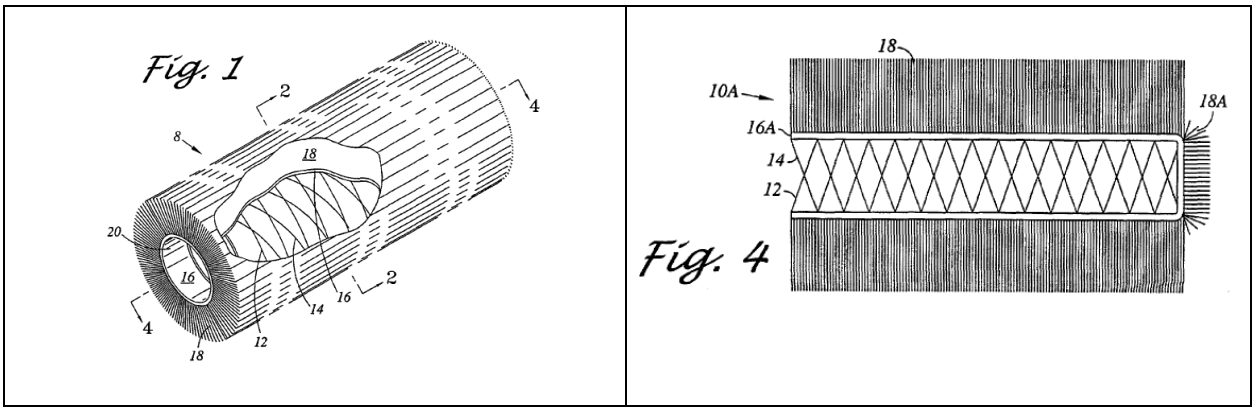

Ex. 1116 [Chuter] Figs. 1, 4. Indeed, Chuter refers to its pile fabric backing as a "graft pouch, sock, or ***sleeve***" (*id.*, ¶¶25, 55), mirroring Spenser II's description of

its compressible material as a "sleeve." Ex. 2124 [-00556FWD] 38; Ex. 1120 [-00034FWD] 48 (same).

Petitioner contends that Chuter's fabric pile backing meets the limitation because "POSITAs would have understood the backing layer to preferably be a porous material to maximize compressibility, blood coagulation, and tissue ingrowth." Pet., 92. But, again, there is no disclosure in Chuter suggesting that its pile fabric backing is "porous" and no spacings are shown or described in Chuter:

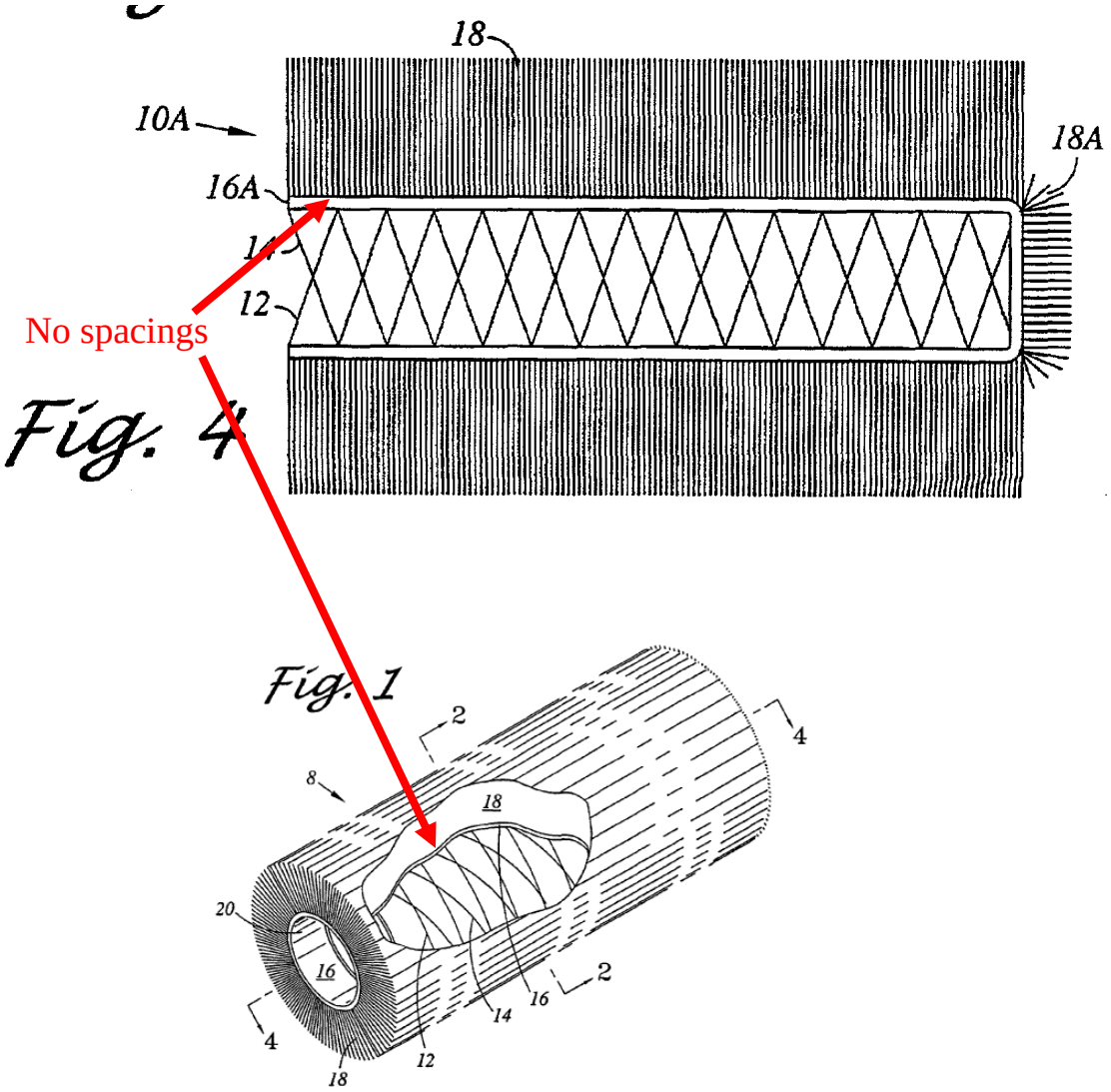

Ex. 1116 [Chuter] Figs. 1, 4.

Instead, the function of Chuter's fabric pile backing requires it to be non-porous when implanted as it is intended to either occlude a blood vessel by extending over at least one open end of the stent, or to alternatively ensure that blood flows only through the channel formed by the inner surface of the stent. *See* Ex. 1116 [Chuter] ¶¶4, 9, 12-16, 25, 54-55, 64; Ex. 2002 [Brecker-Decl.] ¶104. As Dr. Buller testified, POSITAs would expect a TAVR's outer cloth (*e.g.*, Spenser II's compressible material) to be "sufficiently dense" to prevent blood leakage *(i.e.*, be "non-porous"). Section III.C.2, *supra*; Ex. 2128 [Buller-556-Decl.] ¶222; Ex. 2122 [Buller-556-Reply-Depo.] 20:2-21:3 ("nonporous" means "impermeable to fluid."). Petitioner does not explain why Chuter's backing layer would not similarly be "non-porous." And, as discussed, Chuter's backing layer may be made of polyester which the '834 identifies as a material that "prevents blood from passing through the [] surface." *See* Section IV.A.1; Ex. 1116 [Chuter] ¶22; Ex. 1001 ['834] 7:30-36, 8:51-55, 13:35-38, 13:61-67, 15:60-65, 17:6-10, 19:17-20.

If more is needed, Petitioner's assertions that Chuter's backing layer would "preferably" be porous "to maximize blood coagulation and tissue ingrowth" are unsupported by any disclosure or expert testimony. *See* Pet., 92. Indeed, while Petitioner points to paragraph 295 of Dr. Buller's declaration, Dr. Buller only

mentions maximizing blood coagulation or tissue ingrowth as motivations regarding Chuter's occluder embodiment without a backing layer, not the stent graft embodiment. *Compare* Ex. 1003 [Buller-Decl.] ¶295 *with id.*, ¶274. Consequently, Petitioner's bare attorney argument should be ignored. *Wasica Fin. GmbH v. Cont'l Auto. Sys.*, 853 F.3d 1272, 1284-5 (Fed. Cir. 2017) (rejecting "bare attorney argument").

Thus, Chuter's fabric pile backing is not shown to be "free of a non-porous graft covering."

B. Petitioner Fails To Show That Its Chuter Occluder Combinations Render The Claims Obvious.

Petitioner alternatively proposes adding the individual extending fibers of Chuter's occluder embodiments ("Chuter-occluder" combinations) without a backing layer (shown below), to the frame of Spenser I or Levi:

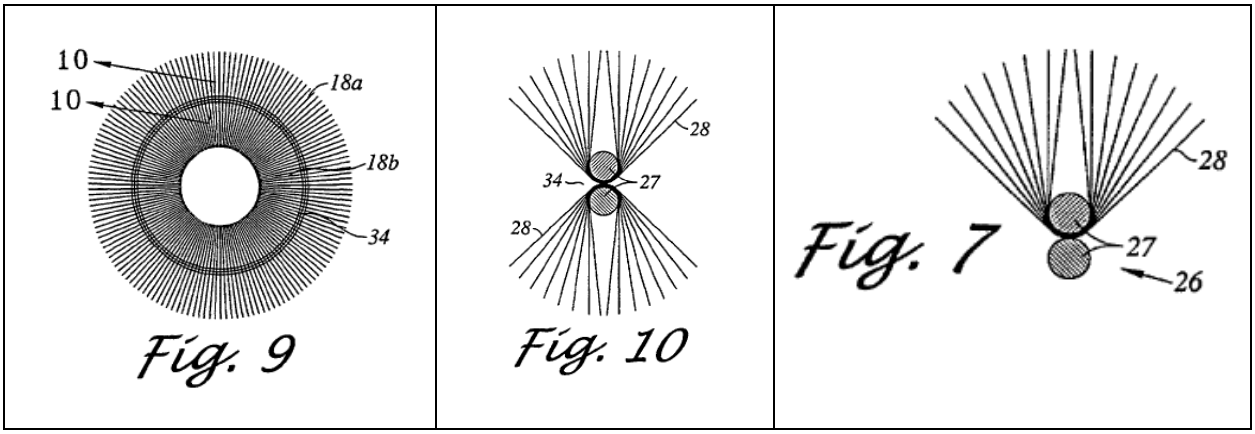

Pet., 78-79, 86-87; Ex. 1116 [Chuter] Figs. 7, 9-10. Petitioner alleges the

"outwardly extending individual fibers" in Chuter's Figures 7-10 represent the "first plurality of fibers," and that the inwardly-extending fibers of the embodiments shown in Chuter's Figures 8-10 correspond to the "second plurality of fibers." Pet., 78-80, 86-87.

Petitioner's arguments, however, fail to show that a POSITA would be either motivated to make the proposed Chuter-occluder combinations or could do so with a reasonable expectation of success. Section IV.B.1. Even if this could be overlooked, Petitioner fails to show the resulting combinations would satisfy the claims. Section IV.B.2.

1. Petitioner Fails To Demonstrate A POSITA Would Be Motivated To Make Its Chuter-Occluder Combinations Or Could Do So With A Reasonable Expectation Of Success.

Petitioner fails to demonstrate a POSITA would be motivated to combine Chuter's occluder embodiments with the frame of either Spenser I or Levi or could achieve the combinations with a reasonable expectation of success. Starting with motivation, Chuter's occluder, used in a bypass procedure, is intended to stop ***all*** blood from passing. An occluder is antithetical to a TAVR which is designed to allow blood to pass through the channel. Preventing blood from passing through a TAVR would kill the patient and, consequently, a POSITA would not be motivated to add an occluder to a TAVR.

As Dr. Brecker explains:

> Chuter is directed toward "Large Vessel Stents And Occluders," and identifies its field of invention as relating to "intravascular stents for occluding vascular members in humans and animals." Ex. 1116 [Chuter] Title, ¶1. The principal function of an occluder, including Chuter's occluder, is to "prevent all blood flow into" a vessel. *See id.*, ¶5 ("it is extremely important to cut off and occlude the damaged portion of the vessel ***to prevent all blood flow into it*** and through it to prevent future complications"). In contrast, TAVRs ***must*** leave the aorta (a large vessel) unobstructed to allow blood to flow through the aortic artery and prosthetic leaflets. It would, accordingly, be counterintuitive for a POSITA to look to a device designed to occlude a blood vessel when designing a TAVR. Indeed, obstructing all blood flow through the aorta and aortic valve would lead to death, and even a partially obstructed aorta or aortic valve would have potentially fatal consequences.

Ex. 2002 [Brecker-Decl.] ¶108.

Indeed, in the prosecution of Chuter, Chuter was distinguished from art (Callister) without extending fibers to block off a stent lumen. As Dr. Brecker explains:

> Notably, in prosecution of Chuter, Chuter was distinguished from art lacking extending fibers to occlude the stent lumen. In prosecution, Chuter was distinguished from U.S. Patent No. 6,096,052 to Callister (Ex. 2125). Callister, directed towards an occluder for use in the reproductive system, teaches a tubular stent with struts and cells

(alternatively described as "braided," "lattice-like" or having an "open configuration") and a "permeable mesh member transversely disposed" thereon to "promote tissue ingrowth." *See, e.g.*, Ex. 2125 [Callister] 1:26-30, 2:1-9, 7:13-16, 3:34-38, 8:4-9. The Examiner issued rejections based, *inter alia*, on the premise that Callister's permeable mesh, which was not taught to have fibers extending therefrom, disclosed or rendered obvious Chuter's fiber pile. Ex. 2126 [Chuter-FH] 170-172, 186. In response, Chuter's applicant explained that:

> The fiber pile cannot be a mesh member because the fiber pile cannot expand so that it extends across the expanded lumen of the stent … ***The fibers of the pile must have sufficient length before the stent lumen is expanded to bridge the expanded lumen of the stent.*** Mesh layer 16 of Callister et al., which comprises woven or bundled strands, is not a fiber pile.

Id., 145, 164-165 (same). In accord, Chuter teaches that its inwardly-extending fibers "substantially occlude the inner bore of the stent" and "plug" the blood vessel. *See* Ex. 1116 [Chuter] ¶¶18, 57. To accomplish this goal, as further made clear in prosecution, the fibers must have sufficient length to traverse the stent's "inner bore" and be densely arranged to immediately form a seal. Chuter's occluder embodiments with only outwardly-extending fibers must also perform this function. Otherwise, the device could not "occlude" the stent's "inner bore." This teaching, however, would have no relevance to the spaces and gaps formed between a TAVR frame and the native valve

> anatomy. Unlike the requirement of a paravalvular leak solution, Chuter's fibers are designed to form a seal not only across the full width of the vessel, but further without compressing against any solid structure. The dense nature of the occluding fibers secured to Chuter's twisted wire loops are designed to cause thrombosis and occlusion of the diseased vessel. *Id.*, ¶11 ("the invention is directed to the use of expandable stents and a fabric pile to yield a[n] endovascular occluding stent for sealing off a vascular vessel to induce the thrombosis of large arteries."). The twisted wire loop stent of Chuter is also uniquely designed for the specific purpose of adapting to the diseased vessels and causing occlusion. No POSITA would look to this design when considering a TAVR valve and a POSITA would further have concerns about the pro-thrombotic potential of the arrangement of fibers in Chuter.

Ex. 2002 [Brecker-Decl.] ¶109.

As Dr. Brecker further explains, a POSITA reading Chuter would not be motivated to add its occluder fibers to a TAVR:

> A POSITA reading Chuter's discussion of its occluder embodiments would readily understand these embodiments to be inconsistent with the purpose of a TAVR. As explained, Chuter's occluders are meant to stop all blood flowing through the vessel, including within the stent. This teaching has no place in a TAVR wherein blood must go through the valve/leaflets within the stent without any risk of surrounding or adjacent thrombosis. Consequently, a POSITA, quite simply, would not be motivated to apply Chuter's

> occluder teachings in the context of TAVRs and any opposite conclusion seems driven by hindsight.

Ex. 2002 [Brecker-Decl.] ¶110.

In accord, a POSITA would not be motivated to make a combination that "would run contrary to [the primary obviousness reference]'s stated purposes." *Polaris Indus., Inc. v. Arctic Cat, Inc.*, 882 F.3d 1056, 1069-70 (Fed. Cir. 2018); *see also In re Ratti*, 270 F.2d 810, 813 (CCPA 1959) (proposed combination improper where it would change basic principle of operation of one of the references); *Plas-Pak Indus., Inc. v. Sulzer Mixpac AG*, 600 F.App'x 755, 759 (Fed. Cir. 2015) ("A change in a reference's 'principle of operation' is unlikely to motivate a person of ordinary skill to pursue a combination with that reference."). The stated purpose of Chuter's occluder and its principle of operation is to "prevent all blood flow into" a vessel. Ex. 1116 [Chuter] ¶5. A TAVR, by contrast, is meant to allow blood to pass unobstructed through the prosthetic leaflets. Chuter's occluder, is, fundamentally, ill-suited for a TAVR environment. Petitioner, moreover, provides no explanation for how Chuter's fibers would be adjusted to allow blood to pass unobstructed through the leaflets.

Petitioner further contends that Spenser II "would have provided POSITAs additional motivation to add Chuter's fiber pile to Spenser's and Levi's valves, arguing that POSITAs would have "recognized Chuter's fiber pile as [sic] type of

compressible material that could be combined with THV[]s to prevent PVL according to Spenser II's teachings." Pet., 97. But, as Dr. Brecker explains:

> I do not believe Spenser II would provide additional motivation for a POSITA to add Chuter's occluding fibers to Levi or Spenser I's frames. Chuter's fabric pile in its occluder embodiment is very different from Spenser II's compressible material. Petitioner, here, relies upon occluder embodiments "that do not include [a] backing layer." Ex. 2124 [-00556FWD] 38; Ex. 1120 [-00034FWD] 48 (same); Pet., 92. While both Spenser II's compressible material and Chuter's backing layer are described as a "***sleeve,***" Chuter describes its occluder embodiments without a backing layer as a "***plug***." *Compare* Ex. 1011 [Spenser-II] ¶145; Ex. 1116 [Chuter] ¶25 *with* Ex. 1116 [Chuter] ¶57. Nor are the fibers similar. Whereas Spenser II describes "***small*** fibers extending from the surface of the [compressible] material," Chuter's occluding fibers "***must have sufficient length*** before the stent lumen is expanded to bridge the expanded lumen of the stent." Ex. 1011 [Spenser-II] ¶145; Ex. 2126 [Chuter-FH] 145, 164-165 (same). Thus, Spenser II and Chuter's occluder embodiments are quite different and, consequently, the former would not motivate a POSITA to adopt the latter.

Ex. 2002 [Brecker-Decl.] 112.

Even if, *arguendo*, a POSITA were inclined to add occluder fibers to a TAVR, nothing in Chuter suggests a POSITA would be motivated to attach Chuter's occluding fibers to the frame of Spenser I or Levi or could do so with a

reasonable expectation of success. Importantly, Chuter's occluding fiber pile is formed when the individual fibers are secured by the twisted, helically wound double wires of Chuter's frame. This method of attachment was used to distinguish Chuter from the prior art in prosecution, wherein the resulting fabric pile was described as a "key element." *See* Ex. 2126 [Chuter-FH] 144, 164-5, 43. As Dr. Brecker explains:

> [I]t has not been shown that a POSITA would be motivated to add Chuter's occluding fibers to the frame or Spenser I or Levi or that such a thing could be done with a reasonable expectation of success. Rather, Chuter's attachment method relies upon placing and securing fibers between Chuter's "twisted strands" of "helically wound wire," which is not present in the frame of Levi or Spenser I.
>
> Chuter teaches stents "made of at least one helically wound wire ... comprising [] at least two twisted strands ... securing fibers to form a fiber pile." Ex. 1116 [Chuter] ¶¶17, 18 (same), 58 ("[r]eferring to FIGS. 5-7, the conical shaped occluder 10B comprises a conical shaped stent 24 comprising at least one helically wound double wire strand 26."). Chuter's applicant presented claim amendments requiring the helically wound wire stent further "form[] a plurality of loops," which Chuter's applicant identified as shown in Figures 5-10:

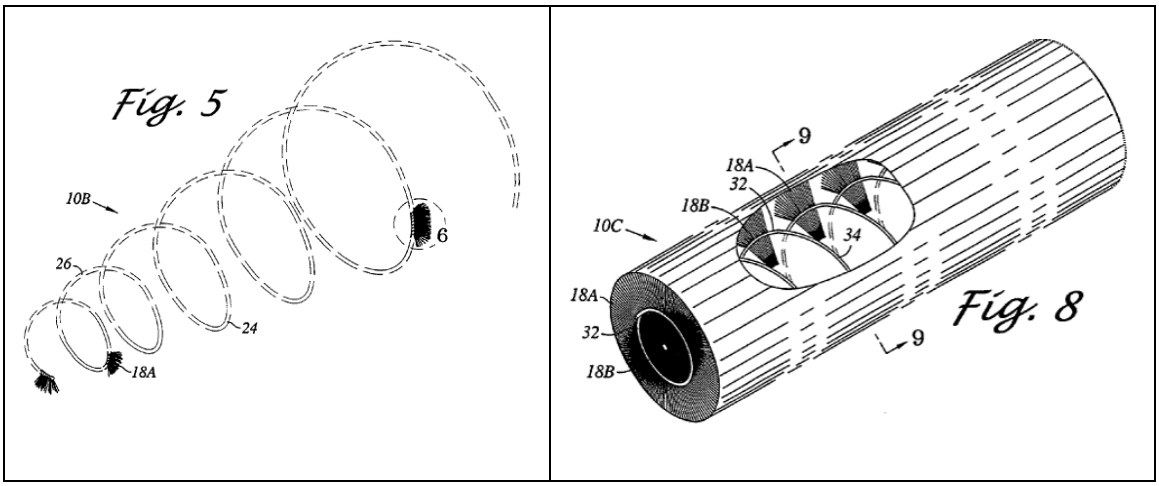

Ex. 1116 [Chuter] Figs. 5, 8; Ex. 2126 [Chuter-FH] 34-40.

The only "technique" or "method" Chuter teaches for attaching fibers to this helical loop, is by "inner-dispos[ing]" or "secur[ing]" the fibers between the twisted, helically wound metal wires. Ex. 1116 [Chuter] Abstract, ¶¶17-18, 20, 5-576. Significantly, Chuter's applicant identified attaching fibers via the "twisted strands of the helical wire" to distinguish Chuter from the prior art, characterizing it as a "key element" of the invention. *See* Ex. 2126 [Chuter-FH] 144, 164-5, 43. Chuter's method of attaching fibers via twisted strands if further shown, *e.g.*, Figures 7 and 10:

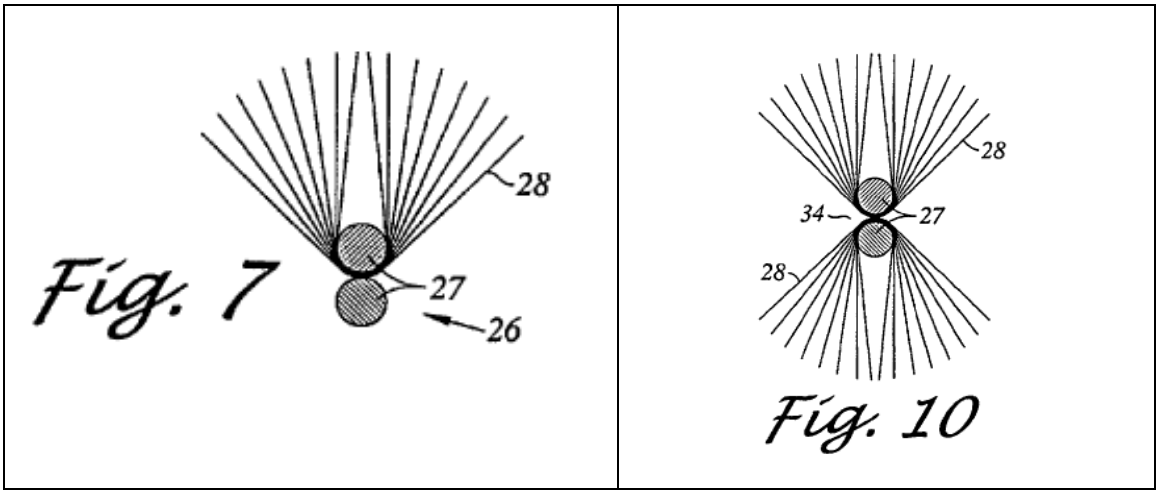

Ex. 1116 [Chuter] Figs. 7, 10; Ex. 2126 [Chuter-FH] 39-40, 43, 144, 164-5.

In contrast, neither of Petitioner's relied-upon frames (Spenser I/Levi) have helically wound wire stents forming loops, much less double wound or twisted wire strands securing fibers therebetween:

Chuter	Spenser I And Levi
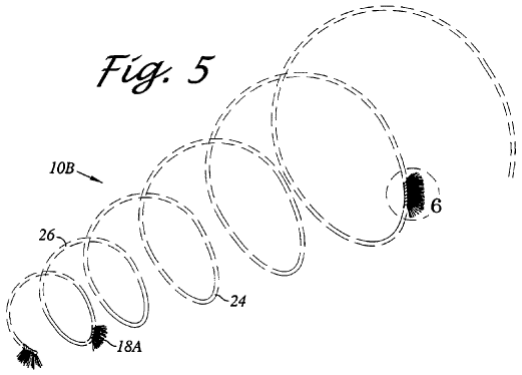 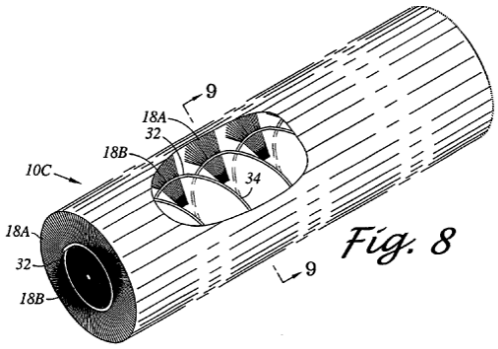	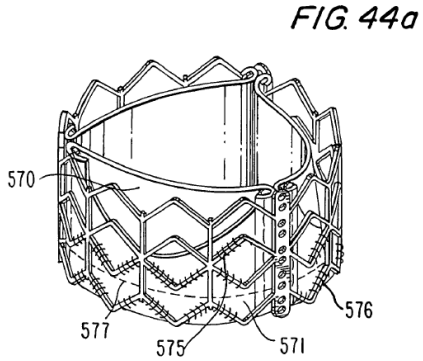 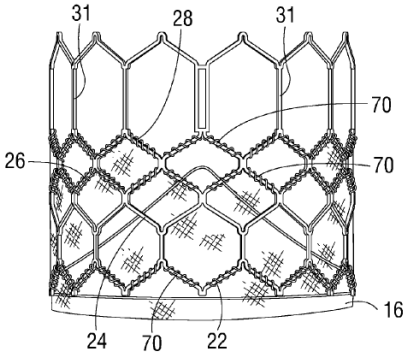

I do not believe a POSITA would be motivated to add Chuter's fibers, attached via the twisted strands of a helical loop, to stent frames like those present in Spenser I and Levi that lack both a helical loop and

> twisted strands. Moreover, even if we assume a POSITA would be inclined to attach the fibers to such a frame, there is no indication of how this would be done nor is it self-evident how a POSITA would accomplish such a thing with a reasonable expectation of success.

Ex. 2002 [Brecker-Decl.] ¶¶113-117.

Dr. Buller asserts that the relied-upon frames would nevertheless be compatible with Chuter's individual extending fibers, contending that POSITAs "would have known that other methods of securing the individual outwardly extending fibers directly to the frame existed, such as tying or gluing the fibers to the frame." Ex. 1003 [Buller-Decl.] ¶261. But, again, a POSITA would not typically be motivated to combine a reference contrary to its principles of operation, much less by applying a method not taught regarding a "key element" of the reference's invention. *Polaris Indus.*, 882 F.3d at 1069-70; *In re Ratti*, 270 F.2d at 813; *Plas-Pak Indus.*, 600 F.App'x at 759 (Fed. Cir. 2015).

Even if we, *arguendo*, assumed that a POSITA would be motivated to tie or glue Chuter's individual occluding fibers to the frame of Spenser I or Levi, critical questions remain unexplained. Per Dr. Brecker:

> Chuter depicts its occluding fibers wrapped around, and fanning outwardly from, the twisted wire strands of its helically wound wire frame:

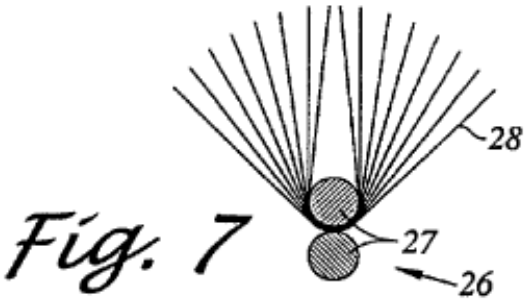

Fig. 7

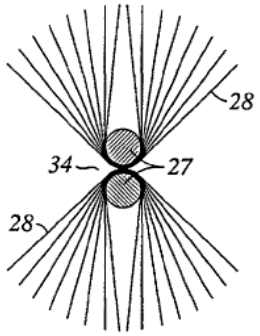

Fig. 10

> Ex. 1116 [Chuter] Figs. 7, 10. Even if we assumed that these fibers could instead be tied or glued to the frame of Levi or Spenser I, no explanation is given regarding why these fibers would still fan outwardly from the strut as depicted above, instead of being clumped or clustered together where tied/glued. These are critical questions which bear directly on whether a POSITA would be motivated to attach Chuter's occluding fibers in this manner to produce a transfemorally-deliverable TAVR that effectively seals against PVL.

Ex. 2002 [Brecker-Decl.] ¶121.

A POSITA, moreover, would not be motivated to add Chuter's occluding fibers to the frame of Spenser I or Levi because these are precisely the sort of frames that were distinguished in Chuter's prosecution and disparaged in its specification. As Dr. Brecker explains:

> Chuter's applicant noted that the relied-upon occluder embodiments without a backing layer (shown in Figures 5-10) are directed to a different "species" than its embodiments featuring a backing layer. Ex. 2126 [Chuter-FH] 200 ("Figures 1-4, 11-14, and 26

are directed to one species; [] Figures 5-10 are directed to a second species."). The "species" of Chuter's occluder embodiments lacking a fabric pile backing was further distinguished in prosecution from Callister's tubular stent with struts and cells (alternatively described as "braided," "lattice-like" or having an "open configuration"):

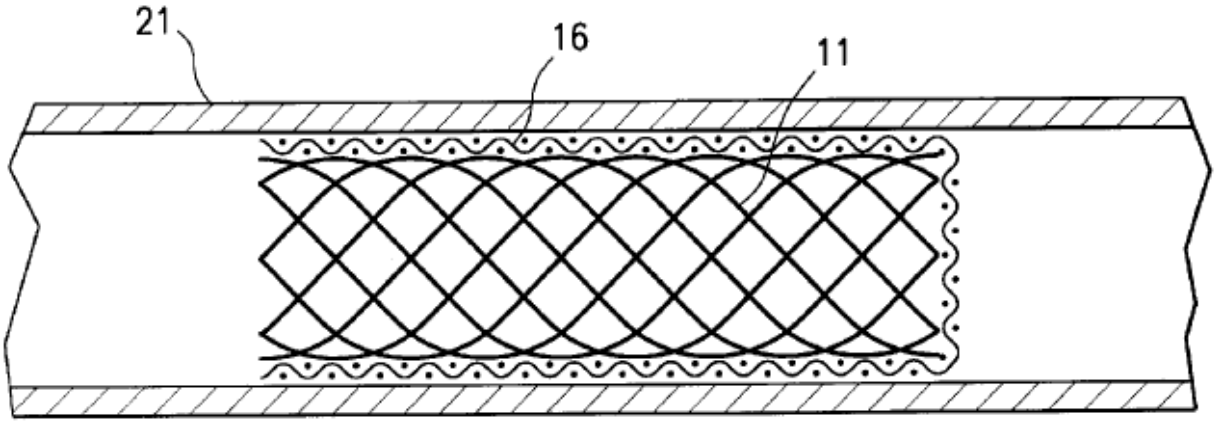

FIG. 11

Ex. 2125 [Callister] Fig. 11; 1:26-30, 2:1-9, 7:13-16, 3:34-38, 8:4-9. In response to the Examiner's rejections of Chuter over Callister, Chuter's applicant explained that Callister's "braided stent … is ***not relevant to the patentability of the [] claimed invention***" because "Applicant's stent is not a braided tube." Ex. 2126 [Chuter-FH] 140, 160.

Indeed, Chuter criticizes known stent grafts' "constant diameter cylindrical profiles," which "usually prevent[] the Stent-graft from closing off the artery because of the surface irregularities commonly seen in the recipient artery which is already damaged" causing "gaps" and "leakage." Ex. 1116 [Chuter] ¶9. But such "open configuration,"

"braided"/"woven" or "lattice-like" stent frames with a "constant diameter cylindrical profile," are precisely what we see Spenser I's and Levi's frames:

Spenser I	Levi
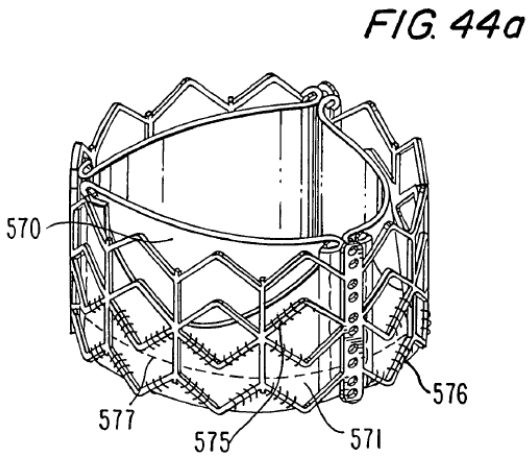	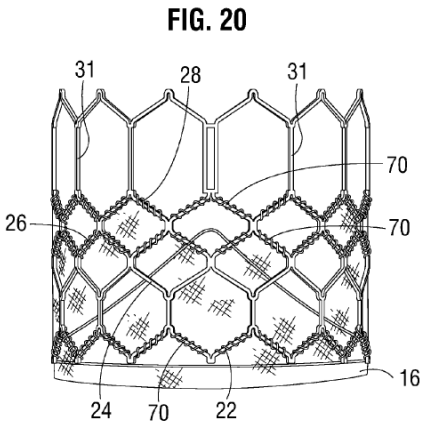

Ex. 1010 [Spenser-I] Fig. 44a; Ex. 1008 [Levi] Fig. 20; *see also* Pet., 24-26 (Spenser I and Levi's frames are "formed from a plurality of struts that form a plurality of cells."). These frames do not resemble Chuter's helical loop stent of twisted wires:

Chuter	Spenser I And Levi
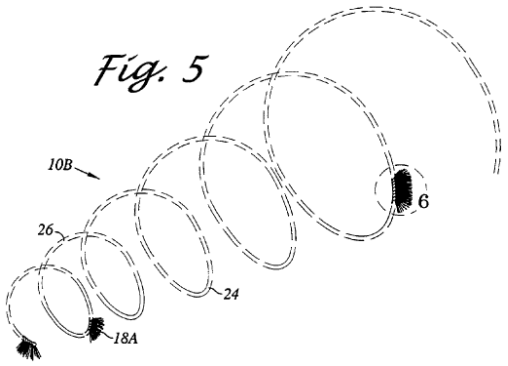 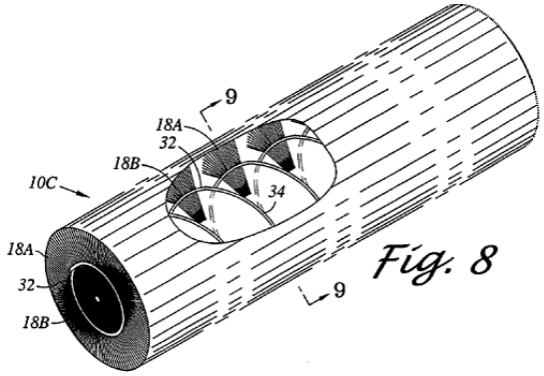	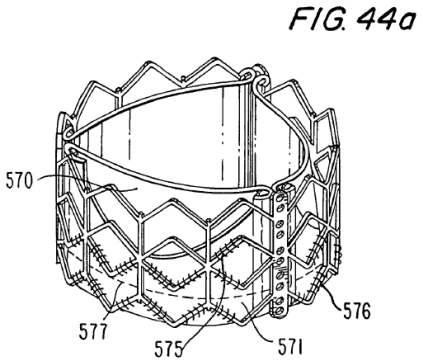 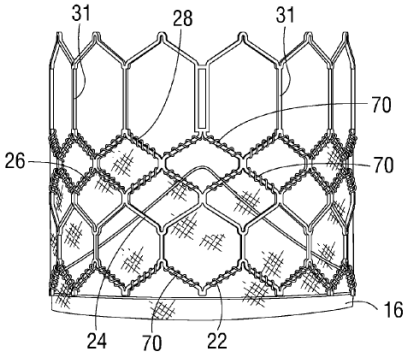

> The manifest differences between Chuter's twisted wire helical loop frame and the relied-upon lattice-like frames distinguished in prosecution and disparaged in the specification would not motivate POSITAs to make the proposed combinations.

Ex. 2002 [Brecker-Decl.] ¶¶122-124.

Petitioner contends that Chuter teaches that its fiber pile "can be adapted" to be compatible with "[v]irtually any expanding stent." Pet., 81. This is incorrect. As Dr. Brecker explains, this teaching pertains only to Chuter's backing layer

embodiments:

> Chuter's disclosure that "[v]irtually any expanding stent" is compatible with Chuter's fabric pile is expressly limited to Chuter's backing layer embodiments. Ex. 1116 [Chuter] ¶¶12-13 ("Virtually any expanding stent can be used ***in this embodiment***."). Chuter does not suggest that "[v]irtualy any expanding stent" is compatible with its embodiments without a backing layer. Indeed, in prosecution, the Applicant's clarified that the relied-upon occluder embodiments without a backing layer are a "different species" from Chuter's backing layer embodiments, and that Chuter's individual extending fibers being held between "twisted strands of the helical wire" was a "key element" of Chuter's invention. Ex. 2126 [Chuter-FH] 200, 144, 164-165. Thus, Chuter in no way suggests its occluding fibers without a backing layer could be added to either Spenser I or Levi's frame.

Ex. 2002 [Brecker-Decl.] ¶126.

Petitioner nevertheless contends that "adding Chuter's fiber pile to Spenser's valves would merely entail applying Chuter's known technique for reducing PVL (adding a fabric pile) to Spenser's known valves" to "yield predictable results," Pet., 81. Petitioner relies on these same "reasons" regarding Levi. *Id.*, 82. But, as discussed, neither Spenser I nor Levi teach a frame comprising the helically wound twisted wires required for the only attachment "method" taught for Chuter's fabric pile without a backing layer.

2. Petitioner's Unspecified Modifications Are Insufficient To Show Its Combinations Meet Each Of The Claims.

Even if, *arguendo*, all of the above could be ignored, Petitioner fails to demonstrate that the resulting Chuter-occluder combinations could be "endovascularly deployed through a femoral artery of a patient." Ex. 1001 ['834-Patent] cls. 1, 17-18.

Petitioner argues that "POSITAs would have reasonably expected Chuter's fabric pile to [] compress when added to Spenser's or Levi's valve, allowing for continued endovascular delivery of the valve through the femoral artery." Pet., 83. Petitioner further contends that Chuter teaches that its "stents are compressed" when placed in a delivery catheter and "'the compression compresses the stent and pushes down the fabric pile' to allow for endovascular delivery." *Id.* Dr. Buller asserts that POSITAs "would have understood that Chuter's fiber pile could have been optimized for delivery through the femoral artery, such as by adjusting the lengths, densities, and distribution of fibers." Ex. 1003 [Buller-Decl.] ¶267; Pet., 83-84. Petitioner contends that a POSITA would be motivated to combine Chuter's "fiber pile" with the frame of Spenser I or Levi to "prevent PVL." Pet., 80-82.

These vague modifications are insufficient to show that a POSITA would reasonably expect to successfully produce a transfemorally-deliverable TAVR by

combining Chuter's occluder embodiments with Spenser I or Levi, as proposed. Indeed, there is no reason to just assume POSITAs would reasonably expect to successfully do so, particularly while "prevent[ing] PVL." As Dr. Brecker explains:

> Petitioner and Dr. Buller do not argue that Chuter's occluding fibers could simply be added to the frame of Spenser I or Levi and the resulting combination would, without modification, be transfemorally deliverable. Rather, they contend a POSITA "would have understood that Chuter's fiber pile could have been optimized for delivery through the femoral artery, such as by adjusting the lengths, densities, and distribution of fibers." Ex. 1003 [Buller-Decl.] ¶267; Pet., 83-84.
>
> I agree that adding Chuter's occluding fibers to the frame of Spenser I or Levi would not allow for transfemoral delivery. While Chuter's occluder embodiments without a backing layer are, themselves, delivered endovascularly, Chuter's dense fibers are accommodated via Chuter's helical loop frame because, unlike the frame of Spenser I or Levi, there is no valve structure or polymer covering within the stent to inhibit crimping:

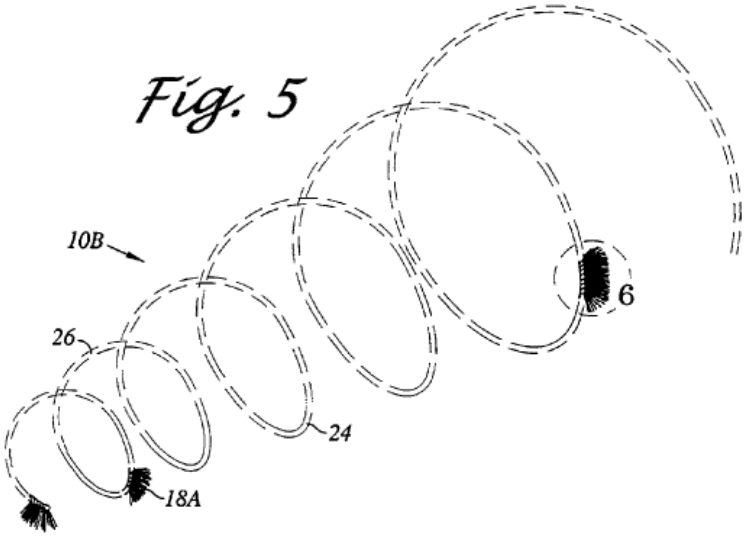

Ex. 1116 [Chuter] Fig. 5. Spenser I and Levi, by contrast, do not just have a hollow frame but, also, a valve, leaflets, and inner skirt that must be accommodated:

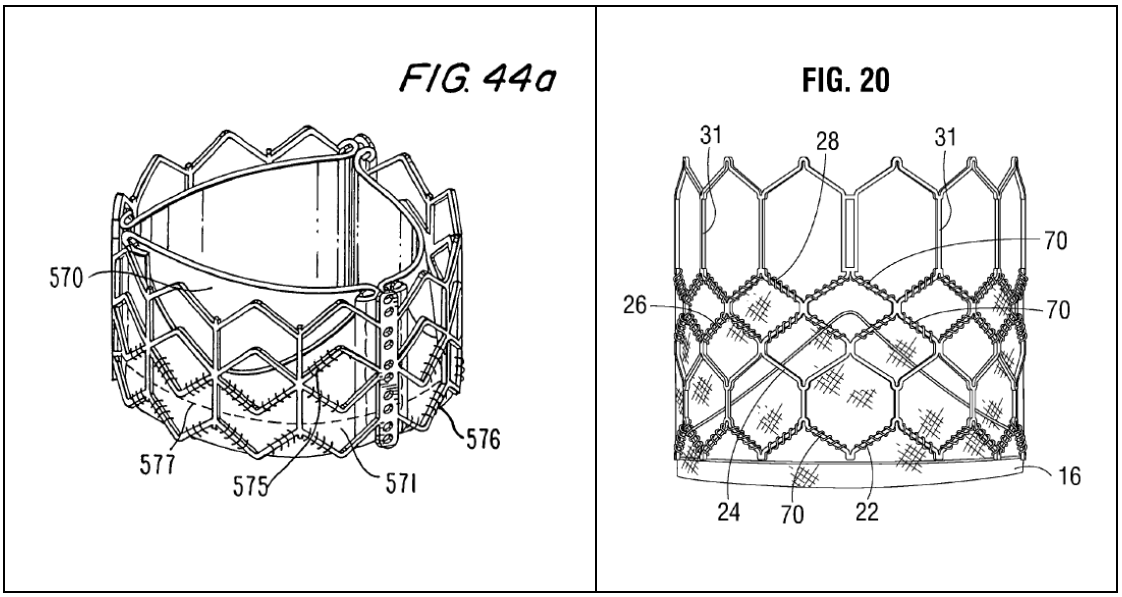

Dr. Buller contends that the "lengths, densities, and distribution of fibers" could be altered to facilitate transfemoral delivery, but, no specifics are proffered for what modifications would be made or how the resulting combination would still be transfemorally deliverable.

> Additionally, no explanation is given for how the so-modified combination would still be dense enough to prevent PVL.

Ex. 2002 [Brecker-Decl.] ¶¶130-132.

Petitioner's vague assertion that some unspecified modifications could be made to Chuter's fibers is insufficient to establish obviousness. *Sisvel Int'l S.A. v. Sierra Wireless, Inc*., -- 4th --, Slip Op. at 15 (Fed. Cir. Oct. 6, 2023) (rejecting combination that was "too conclusory, lacked clarity, or ... both"); *DSS Tech. Mgmt.*, 885 F.3d at 1375 (rejecting expert's "conclusory statements and unspecific expert testimony") (citation/quotation omitted); *ActiveVideo Networks Inc. v. Verizon Comms., Inc.*, 694 F.3d 1312, 1327 (Fed. Cir. 2012) ("the expert's testimony on obviousness was essentially a conclusory statement that a [POSITA] would have known … how to combine … [relied-upon] references to achieve the claimed inventions. This is not sufficient and is fraught with hindsight bias.").

Additionally, while there was a long-felt need for an endovascularly-deliverable TAVR with an effective seal against PVL, Petitioner has not presented any prior art reference disclosing a device comprising a sparse distribution of fibers extending from the frame to form an effective seal against PVL when the valve is expanded. Indeed, both experts testified that they were unaware of any such prior art device with a sparse distribution of fibers like those shown in, *e.g.*, Figure 9:

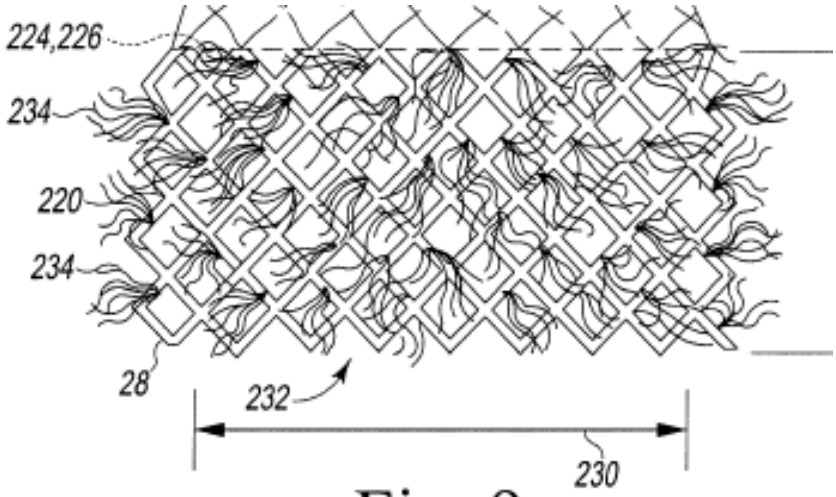

Fig. 9

Ex. 1001 ['834-Patent] Fig. 9; Ex. 2052 [Buller-00034-Depo.] 167:10-15, 169:5-25; Ex. 2002 [Brecker-Decl.] ¶133. The Board, moreover, credited Dr. Brecker's testimony that such a "sparse distribution of fibers," when "compressed within the body" would "form a seal is an ***unexpected result.***" Ex. 2124 [-00556FWD] 33-34 (quoting Ex. 2103 [Brecker-556-Decl.] ¶160); Ex. 1120 [-00034FWD] 44 (similar). Consequently, relying upon a thinner distribution of fibers, as taught in the '834, is impermissible hindsight. *InTouch Techs., Inc. v. VGo Commc'ns., Inc*., 751 F.3d 1327, 1351 (Fed. Cir. 2014) (rejecting obviousness theory as hindsight where expert "relied on the [] patent itself as her roadmap for putting what she referred to as pieces of a 'jigsaw puzzle' together.").

Even assuming, *arguendo*, that the so modified version of Chuter could be transfemorally deliverable, Petitioner further fails to show the resulting combination would disclose or render obvious the "spacings" of claims 2, 17 and

18 which, again, allow for the creation of a paravalvular seal by compressing the fibers atop or within the spacings after the valve is deployed in the body. *See* Section III.A, Ex. 2002 [Brecker-Decl.] ¶134. Petitioner, as just discussed, fails to specifically explain how Chuter's lengthy, dense occluding fibers would be modified when added to the frame of Spenser I or Levi, much less that the resulting device would have such "spacings."

Thus, Petitioner fails to show that its proposed addition of Chuter's individual extending fibers without a fabric pile backing would meet each of the claims. This confirms the overarching error in Petitioner's analysis, a reliance on impermissible hindsight.

V. DISCLAIMED CLAIMS 1, 3-6, 8 AND 10-16 SHOULD BE TREATED AS THOUGH THEY NEVER EXISTED AND MAY NOT BE A BASIS FOR INSTITUITON UNDER 37 C.F.R. § 42.107(E).

To streamline this proceeding, and in compliance with 37 C.F.R. § 1.321(a), Patent Owner has filed a statutory disclaimer under 35 U.S.C. § 253(a) of claims 1, 3-6, 8 and 10-16 of the '834 patent (the "Disclaimed Claims"). Ex. 2135 [Disclaimer]. To avoid any doubt, this disclaimer is not a request for adverse judgment. Rather, and as a matter of law, the Disclaimed Claims should be treated as though they never existed. *Baker Hughes v. LiquidPower Specialty Prods., Inc.*, IPR2016-01903, Paper 74, 11-12 (PTAB Mar. 8, 2019) (citing Federal Circuit precedents); *Intel Corp. v. VLSI Technology LLC*, IPR2018-01040, Paper 36, 16

(PTAB Feb. 12, 2020) (similar). Additionally, under the Office's rules, "[n]o *inter partes* review will be instituted based on disclaimed claims." 37 C.F.R. § 42.107(e).

VI. CONCLUSION

The Petition should be denied.

Respectfully submitted,

/Kenneth J. Weatherwax/

Kenneth J. Weatherwax, Reg. No. 54,528
Nathan N. Lowenstein (*pro hac vice* motion to be filed)
Lowenstein & Weatherwax LLP
Date: October 10, 2023

CERTIFICATE OF COMPLIANCE WITH TYPE-VOLUME LIMITS

This Patent Owner Preliminary Response (the "POPR") consists of 13,753 words, excluding table of contents, table of authorities, certificate of service, this certificate, or table of exhibits. The POPR complies with the type-volume limitation of 14,000 words as mandated in 37 C.F.R. § 42.24. In preparing this certificate, counsel has relied on the word count of the word-processing system used to prepare the paper (Microsoft Word).

Respectfully submitted,

/William Katz/

Date: October 10, 2023

CERTIFICATE OF SERVICE

The undersigned hereby certifies that the following documents were served by electronic service, by agreement between the parties, on October 10, 2023:

PATENT OWNER AORTIC INNOVATIONS LLC'S PRELIMINARY RESPONSE

EXHIBITS 2002, 2008, 2040, 2043, 2047, 2052, 2087, 2101-2103, 2108-2110, 2122, 2124-2135

The names and address of the parties being served are as follows:

Craig S. Summers	2css@knobbe.com
Joshua J. Stowell	2jys@knobbe.com
Brian C. Barnes	2bcb@knobbe.com
	BoxEdwards28-1@knobbe.com

Respectfully submitted,

/William Katz/

Date: October 10, 2023