US006663667B2

(12) **United States Patent**
Dehdashtian et al.

(10) **Patent No.: US 6,663,667 B2**
(45) **Date of Patent: Dec. 16, 2003**

(54) **TOWEL GRAFT MEANS FOR ENHANCING TISSUE INGROWTH IN VASCULAR GRAFTS**

(75) Inventors: **Mark Dehdashtian**, Costa Mesa, CA (US); **Jens Allenberg**, Heidelberg (DE)

(73) Assignee: **Edwards Lifesciences Corporation**, Irvine, CA (US)

(*) Notice: Subject to any disclaimer, the term of this patent is extended or adjusted under 35 U.S.C. 154(b) by 37 days.

(21) Appl. No.: **10/002,358**

(22) Filed: **Oct. 31, 2001**

(65) **Prior Publication Data**

US 2002/0099441 A1 Jul. 25, 2002

Related U.S. Application Data

(63) Continuation-in-part of application No. 09/473,618, filed on Dec. 29, 1999, now Pat. No. 6,344,056.

(51) **Int. Cl.**[7] **A61F 2/06**

(52) **U.S. Cl.** **623/1.51**; 623/1.52; 623/1.54; 623/1.35

(58) **Field of Search** 623/1.35, 1.49–76, 623/1.54

(56) **References Cited**

U.S. PATENT DOCUMENTS

4,047,252 A	*	9/1977	Liebig et al.	623/1.51
4,149,911 A		4/1979	Clabburn	
4,225,979 A		10/1980	Rey et al.	
4,306,318 A		12/1981	Mano et al.	
4,512,338 A		4/1985	Balko et al.	
4,517,687 A		5/1985	Liebig et al.	
4,553,545 A		11/1985	Maass et al.	
4,617,932 A		10/1986	Kornberg	
4,649,922 A		3/1987	Wiktor	
4,665,906 A		5/1987	Jervis	
4,665,918 A		5/1987	Garza et al.	
4,681,110 A		7/1987	Wiktor	
4,728,328 A		3/1988	Hughes et al.	
4,729,766 A		3/1988	Bergentz et al.	

(List continued on next page.)

FOREIGN PATENT DOCUMENTS

DE	1766921	9/1970
EP	0177300	3/1986
EP	0335341	10/1989
EP	0421729	4/1991
EP	0646365 A	4/1995
4,732,152 A	3/1988	Wallsten et al.
4,762,128 A	8/1988	Rosenbluth
4,772,264 A	9/1988	Cragg
4,800,882 A	1/1989	Gianturco

(List continued on next page.)

OTHER PUBLICATIONS

Roy M. Fujitani, MD., et al., Utility of the LifePath AAA Graft System: Preliminary Results of a Prospective, Concurrent Control, Multicenter Clinical Trial, Presented at the 16th Annual Scientific Meeting of The Western Vascular Society, Sante Fe, NM: Sep. 23–26, 2001.

Primary Examiner—David H. Willse
Assistant Examiner—Suzette J. Jackson
(74) *Attorney, Agent, or Firm*—Lena I. Vinitskaya, Esq.; Nicole Bradley, Esq.; Guy Cumberbatch, Esq.

(57) **ABSTRACT**

A woven vascular graft having a texturized outer surface to promote tissue ingrowth into the graft. The outer surface of the graft is equipped with a plurality of threads that are woven into, and extend from, the outer surface. The threads may be arranged in rows, lines or a geometric pattern. Alternatively, the threads may be towel-like. Such towel-like threads may be arranged in the form of a cuff at each end of the graft, or may cover larger portions of the exterior of the graft. The graft may be equipped with only one texture, or with a plurality of different textures.

30 Claims, 5 Drawing Sheets

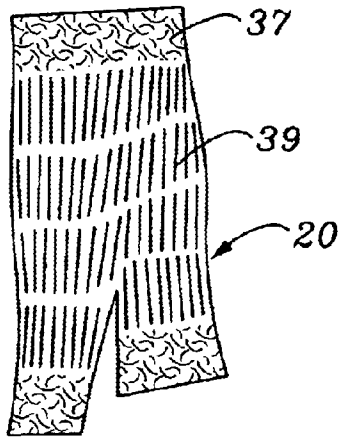

U.S. PATENT DOCUMENTS

4,820,298 A 4/1989 Leveen et al.
4,878,906 A 11/1989 Lindemann et al.
4,886,062 A 12/1989 Wiktor
4,886,065 A 12/1989 Collins, Jr.
4,892,539 A * 1/1990 Koch 623/1.51
4,913,141 A 4/1990 Hillstead
4,969,458 A 11/1990 Wiktor
4,969,890 A 11/1990 Sugita et al.
5,078,726 A 1/1991 Kreamer
5,078,736 A 1/1991 Behl
4,994,071 A 2/1991 MacGregor
5,019,090 A 5/1991 Pinchuk
5,037,427 A 8/1991 Harada et al.
5,047,050 A 9/1991 Arpesani
5,057,092 A 10/1991 Webster, Jr.
5,064,435 A 11/1991 Porter
5,067,957 A 11/1991 Jervis
5,085,635 A 2/1992 Cragg
5,104,404 A 4/1992 Wolff
5,133,732 A 7/1992 Wiktor
5,183,085 A 2/1993 Timmermans
5,192,297 A 3/1993 Hull
5,201,901 A 4/1993 Harada et al.
5,207,695 A 5/1993 Trout, III
5,236,446 A 8/1993 Dumon
5,275,622 A 1/1994 Lazarus et al.
5,342,387 A 8/1994 Summers
5,354,309 A 10/1994 Schnepp-Pesch et al.
5,360,443 A 11/1994 Barone et al.
5,366,504 A 11/1994 Andersen et al.
5,383,928 A 1/1995 Scott et al.
5,387,235 A 2/1995 Chuter
5,397,345 A 3/1995 Lazarus
5,397,359 A * 3/1995 Mittelmeier et al. 623/16.11
5,415,664 A 5/1995 Pinchuk
5,429,144 A 7/1995 Wilk
5,443,496 A 8/1995 Schwartz et al.
5,443,498 A 8/1995 Fontaine
5,456,713 A 10/1995 Chuter
5,464,449 A 11/1995 Ryan et al.
5,507,767 A 4/1996 Maeda et al.
5,507,771 A 4/1996 Gianturco
5,509,931 A * 4/1996 Schmitt 623/1.51
5,522,880 A 6/1996 Barone et al.
5,562,724 A 10/1996 Vorwerk et al.
5,562,727 A 10/1996 Turk et al.
5,562,728 A 10/1996 Lazarus et al.
5,571,170 A 11/1996 Palmaz et al.
5,571,173 A 11/1996 Parodi
5,575,817 A 11/1996 Martin
5,578,071 A 11/1996 Parodi
5,578,072 A 11/1996 Barone et al.
5,591,229 A 1/1997 Parodi
5,609,627 A 3/1997 Goicoechea et al.
5,643,208 A 7/1997 Parodi
5,674,276 A 10/1997 Andersen et al.
5,683,450 A 11/1997 Goicoechea et al.
5,683,451 A 11/1997 Lenker et al.
5,693,086 A 12/1997 Goicoechea et al.
5,693,087 A 12/1997 Parodi
5,693,088 A 12/1997 Lazarus
5,709,713 A 1/1998 Evans et al.
5,713,948 A 2/1998 Uflacker
5,716,365 A 2/1998 Goicoechea et al.
5,718,724 A 2/1998 Goicoechea et al.
5,752,522 A 5/1998 Murphy
5,769,887 A 6/1998 Brown et al.
5,782,904 A 7/1998 White et al.
5,824,037 A 10/1998 Fogarty et al.
5,824,047 A 10/1998 Moreland
5,860,923 A 1/1999 Lenker et al.
5,944,750 A 8/1999 Tanner et al.
5,957,940 A 9/1999 Tanner et al.
5,984,955 A 11/1999 Wisselink
6,059,824 A 5/2000 Taheri
6,090,137 A 7/2000 Schmitt
6,099,557 A * 8/2000 Schmitt 623/1.1
6,102,940 A 8/2000 Robichon et al.
6,152,956 A 11/2000 Pierce
6,159,239 A 12/2000 Greenhalgh
6,162,246 A 12/2000 Barone
6,221,099 B1 * 4/2001 Andersen et al. 623/1.15
6,221,102 B1 4/2001 Baker et al.
6,344,056 B1 2/2002 Dehdashtian
6,395,019 B2 * 5/2002 Chobotov 623/1.35
6,409,757 B1 * 6/2002 Trout, III et al. 623/1.36
6,547,820 B1 * 4/2003 Staudenmeier 623/1.49
6,592,617 B2 * 7/2003 Thompson 623/1.53
2002/0099441 A1 7/2002 Dehdashtian

FOREIGN PATENT DOCUMENTS

EP 0686379 A2 12/1995
EP 0792627 A3 11/1997
EP 0880948 A1 12/1998
EP 0947179 A2 10/1999
FR 2409747 10/1980
FR 2512678 11/1985
FR 2678508 A1 1/1993
FR 2775182 8/1999
GB 2189150 10/1987
WO WO83/00997 3/1983
WO WO90/04982 5/1990
WO WO92/00043 1/1992
WO WO95/08966 4/1995
WO WO96/10375 4/1996
WO WO96/28116 9/1996
WO WO98/07389 2/1998
WO WO99/65418 12/1999
WO WO 01/21102 A1 3/2001
WO WO 01/66167 A2 9/2001

* cited by examiner

Fig. 1

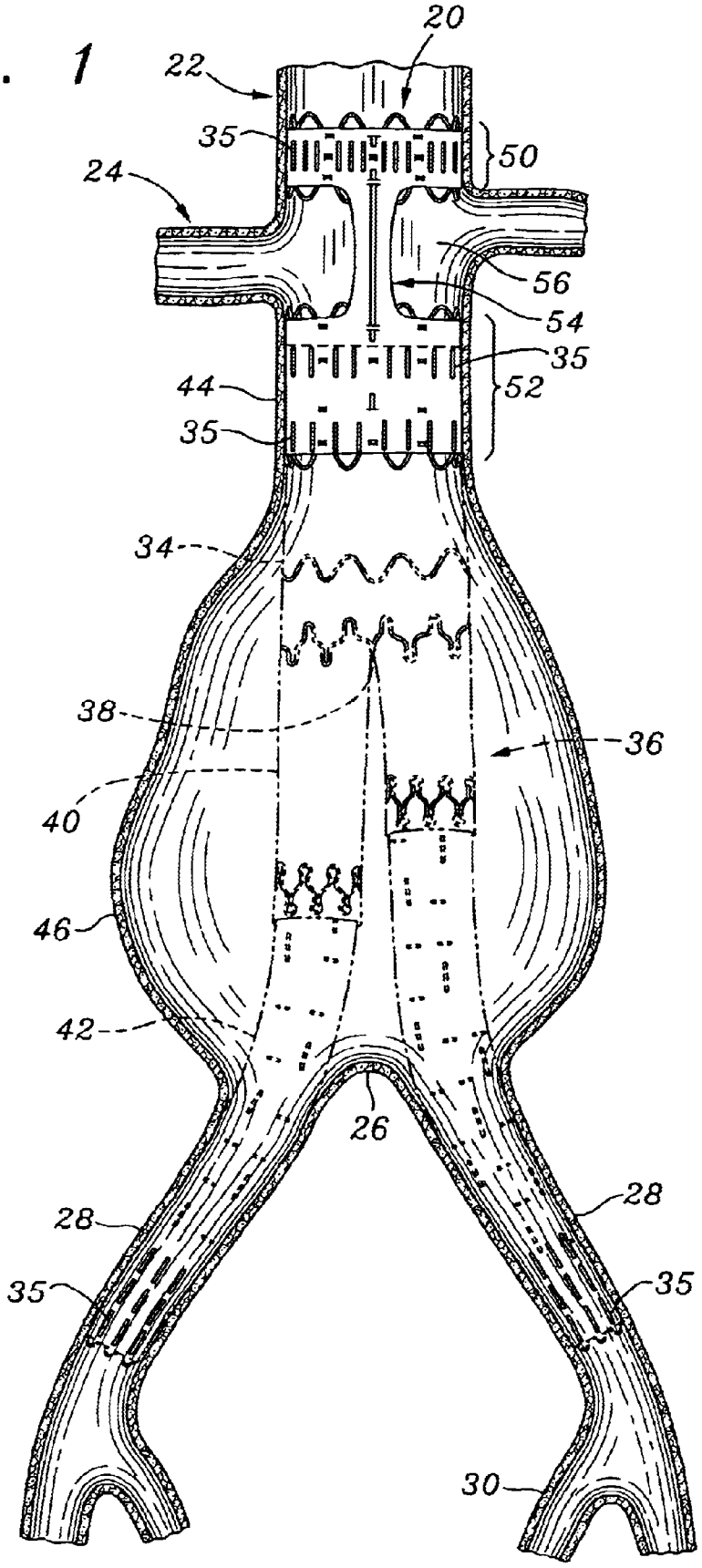

Fig. 2

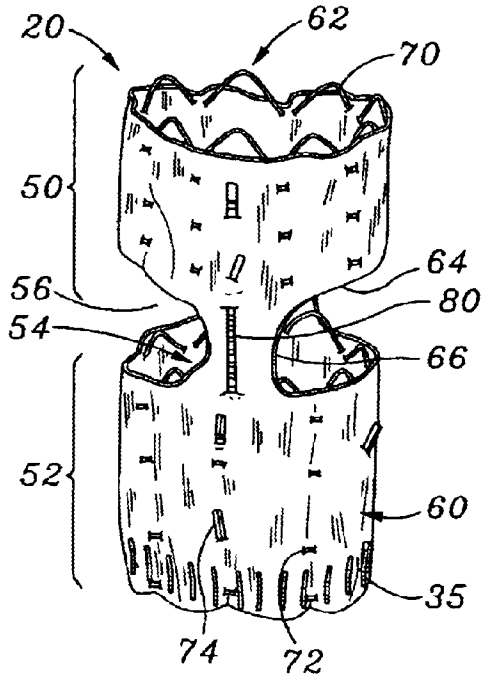

Fig. 3

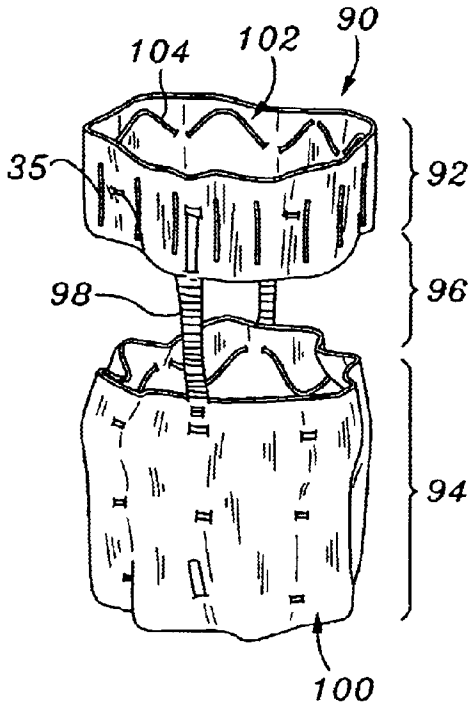

Fig. 4

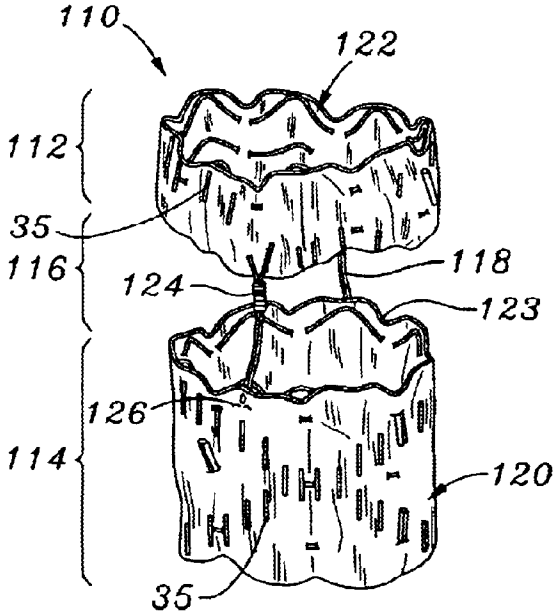

Fig. 5

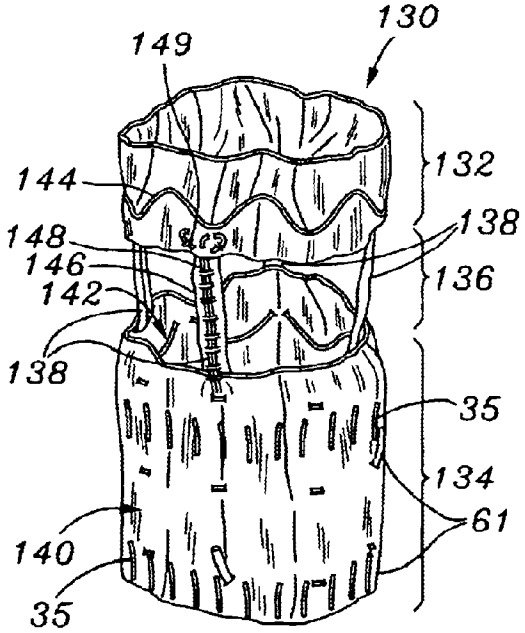

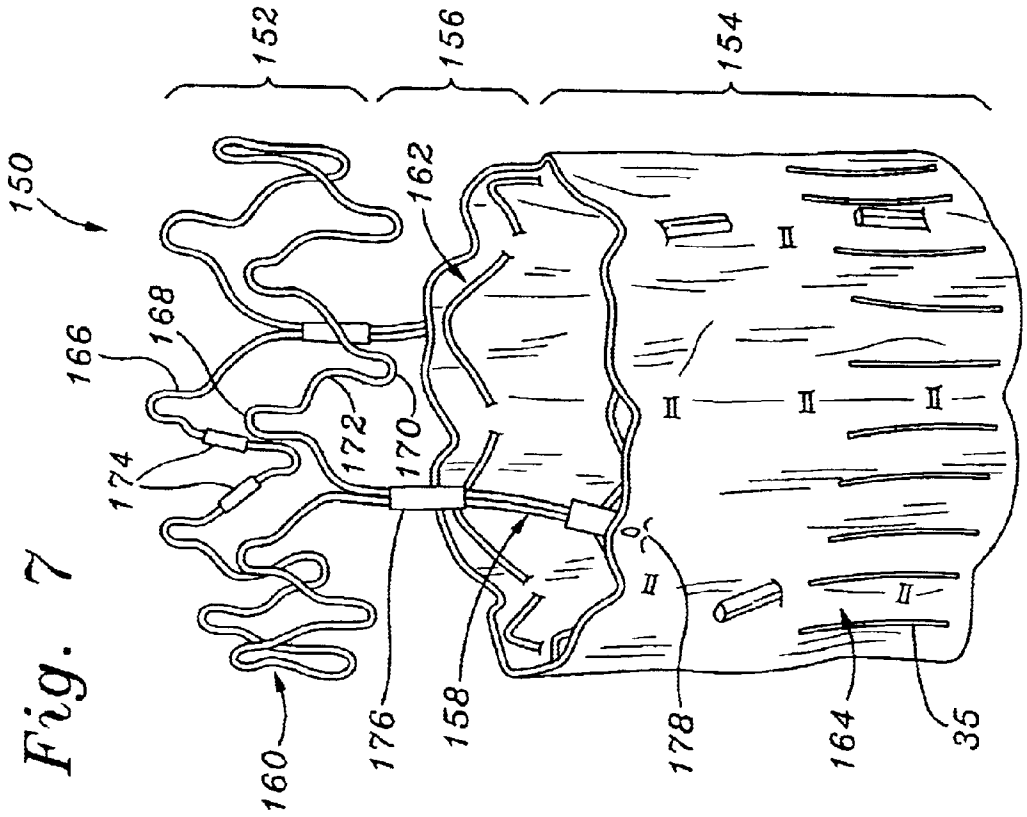
150
152
156
154
162
166
168
174
172
170
160
176
158
178
164
35

Fig. 7

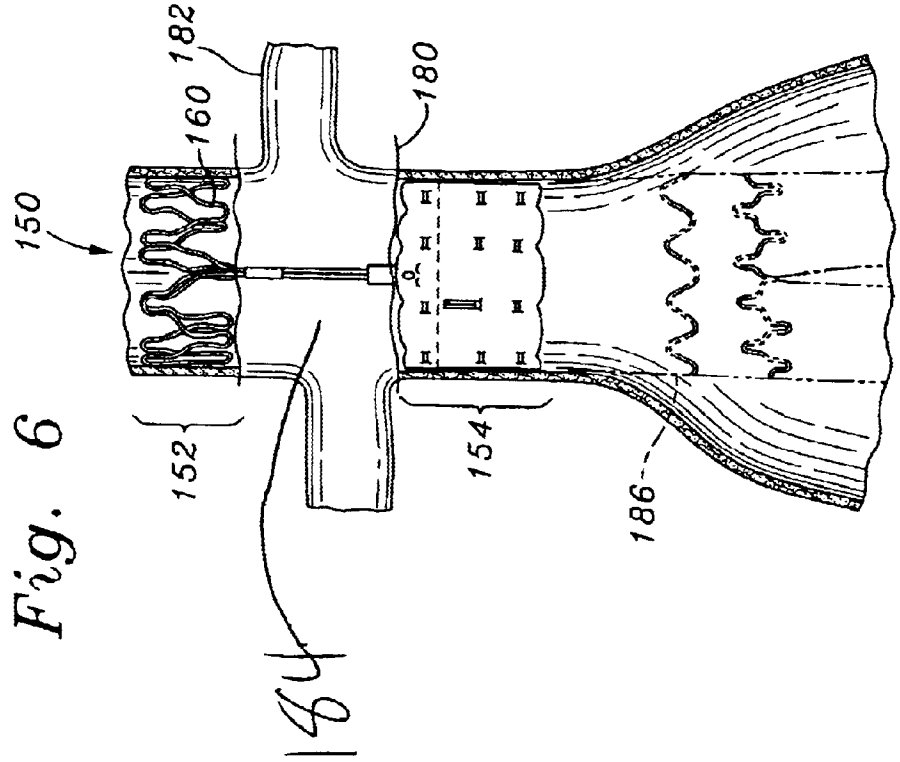
150
182
160
180
152
154
186
184

Fig. 6

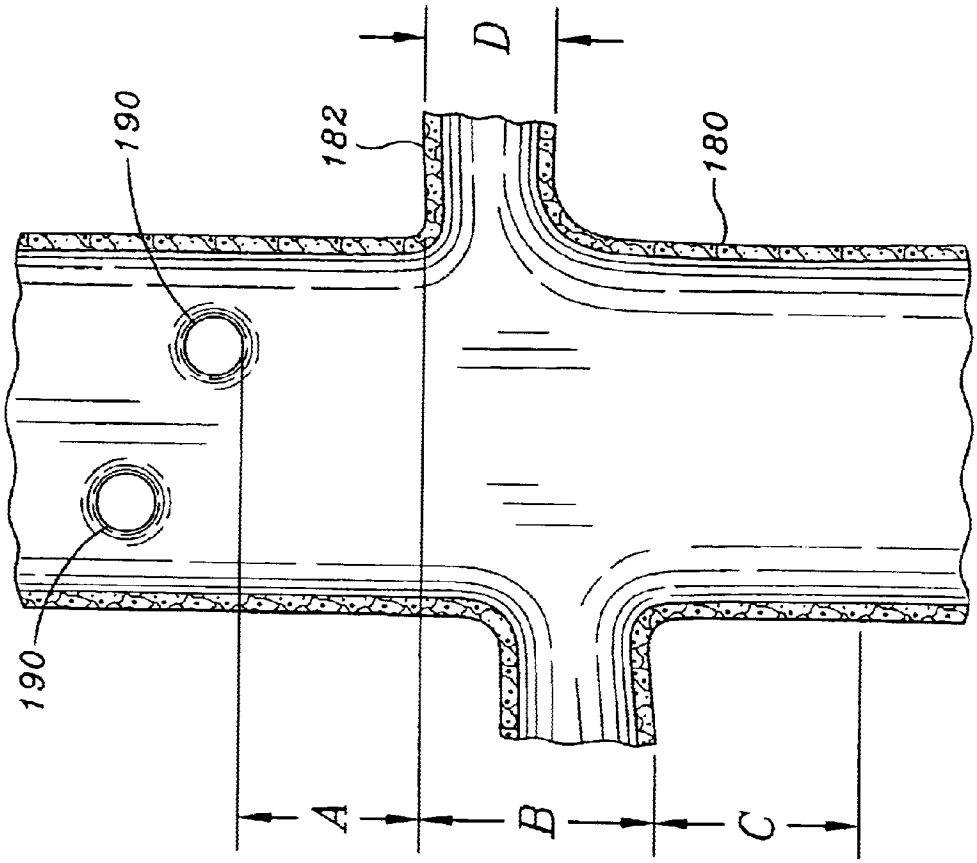

Fig. 9

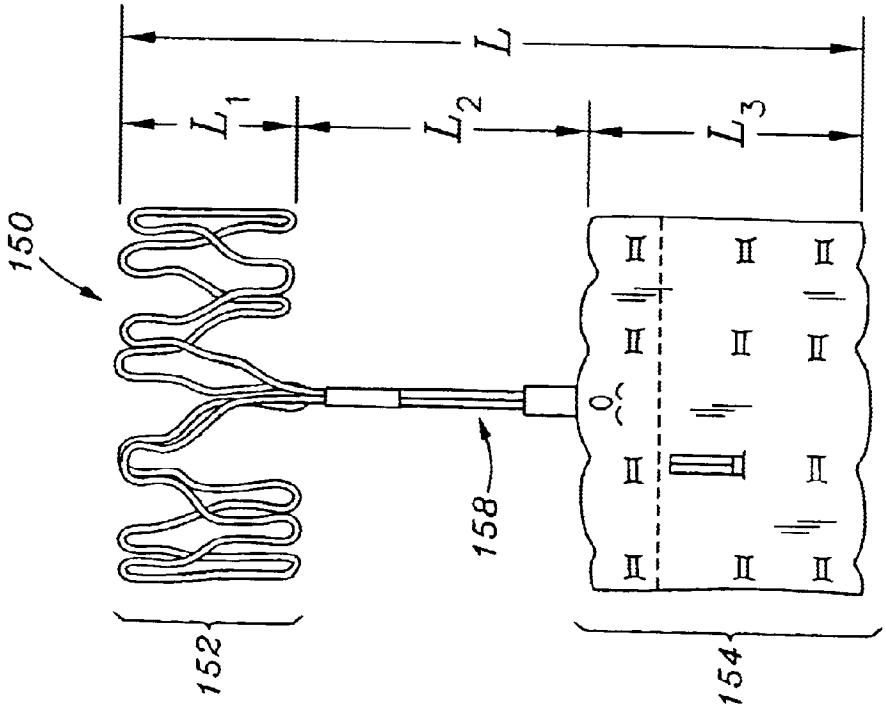

Fig. 8

Fig. 10

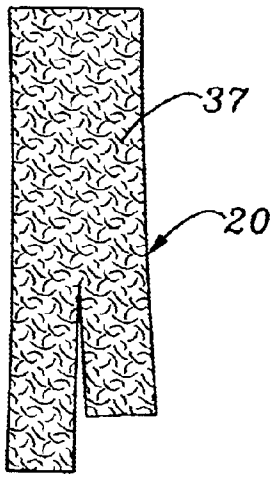

Fig. 11

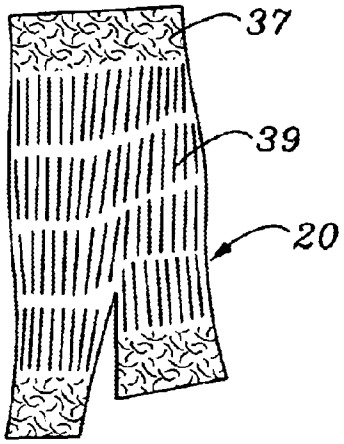

Fig. 12

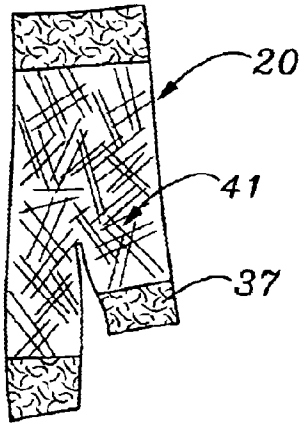

TOWEL GRAFT MEANS FOR ENHANCING TISSUE INGROWTH IN VASCULAR GRAFTS

CROSS REFERENCE TO RELATED APPLICATIONS

The instant application for U.S. Letters Patent is a Continuation-In-Part of U.S. Ser. No. 09/473,618, filed Dec. 29, 1999, now U.S. Pat. 6,344,056 which is currently pending as an allowed case before the United States Patent and Trademark Office.

BACKGROUND OF THE INVENTION

1. Field of the Invention

The present invention relates to prosthetic vascular grafts and, more particularly, to a vascular graft having an exterior texture to promote tissue ingrowth into the graft to enhance fixation and, inter alia, preclude perigraft leakage.

2. Discussion of the Related Art

An aneurysm is a ballooning of the wall of an artery resulting from weakening due to disease or other condition. Left untreated, the aneurysm may rupture, resulting in severe loss of blood and potentially death. An aneurysm in the abdominal aorta is the most common form of arterial aneurysm. The abdominal aorta, which extends downward from the heart in front of and parallel to the spine, through the thorax and abdomen, and branches off in a plurality of side vessels, connects the ascending aorta at the heart and to the circulatory system of the trunk and lower body. Branched vessels of the aorta supply the two kidneys via oppositely-directed renal arteries. Below the renal arteries, the abdominal aorta continues to about the level of the fourth lumbar vertebrae and divides at a Y-junction into the left and right iliac arteries, which supply blood to the lower extremities.

A common location for an aortic aneurysm is in the section of aorta between the renal and iliac arteries. Without rapid surgical intervention, a rupture of the abdominal aorta is commonly fatal because of the high volume of blood flow within the aorta. Conventional surgical intervention involves penetrating the abdominal wall to the location of the aneurysm to reinforce or replace the diseased section of the aorta. Typically, a prosthetic tube graft replaces the area of, or proximal and distal zones abutting, a potential rupture portion of the aorta. Unfortunately, conventional surgical intervention has resulted in substantial morbidity rates, and at the very least a protracted recovery period. Likewise, cost and other constraints militate for a longstanding need for endovascular intervention.

In recent years, methods and devices have been developed to treat an aortic aneurysm without opening up the abdominal wall. These new techniques typically involve a catheter-carried tubular graft delivered upward from the femoral artery through the iliac artery and into the region of the aneurysm. The graft normally includes a tubular graft body supported by an expandable stent, either self-expanding or balloon-expanding. The balloon-expanding type of stent naturally requires an expansion balloon, while the self-expanding type is simply deployed from the end of a tubular sheath. Implacement issues impact upon both known techniques.

If the aneurysm affects the Y-junction between the abdominal aorta and the iliac arteries, a bifurcated graft is typically used. A trunk portion of the bifurcated graft is secured to a healthy section of the abdominal aorta just below the renal arteries, and branched legs of the graft are

secured within each of the iliac arteries, sometimes via a tubular extension graft. This procedure does not involve cardiopulmonary bypass, and thus blood continues to flow downward through the abdominal aorta. Certain complications arise in anchoring the graft to the inner wall of the vessel, because of the high blood flow both during the procedure and afterward. Indeed, the risk of grafts migrating within a vessel is a problem in many locations, not just in the abdominal aorta. In addition, the abdominal aorta may be aneurysmic very close to the renal arteries, which results in a fairly poor substrate within which to secure a repair graft. In fact, surgeons require various minimum lengths of healthy aortic wall below the renal arteries before an endovascular graft repair is indicated, or else a conventional invasive technique must be used. Moreover, the same consideration of a minimum healthy portion of the host vessel applies in other areas, especially with regard to the portion of the aorta adjacent the branching subclavian or carotid arteries. Additionally, leaking is likely to occur if a vessel is deformed due to an aneurysm.

A number of techniques have been proposed for anchoring grafts to vessel walls, most notably the use of barbs or hooks extending outward from graft that embed themselves into the vessel wall. Although these devices secure the graft, the intrusions into the vessel wall may damage the wall and cause complications. Alternatively, some devices have portions extending beyond the upstream end of the graft body which may be bent outward into contact with the vessel wall, either from a pre- or shape memory-bias, or from expansion of a balloon in this region. However, the optimal way to attach stentgrafts is to allow them to become naturally fixed to the vessels, such as by tissue ingrowth. This need is largely unaddressed in the art.

For example, the ZENITH AAA brand of Endovascular Graft from Cook, Inc. of Bloomington, Ind., utilizes an undulating wire support having barbs for supra-renal fixation of the graft. However, because these wires extend across the opening of the branching renal arteries they present a certain impediment to blood flow therethrough.

Moreover, any structure placed in the path of blood flow may tend to initiate the blood clotting cascade, which in turn, may generate free-floating emboli that would adversely impact the kidneys, or other organ that is perfused through the affected side branch. Because the kidneys are highly susceptible to injury from incursion of such emboli, it is highly desirable to avoid even the possibility of blood clotting at the mouth of the renal arteries.

In the context of preventing leaking around the graft, some manufacturers have provided grafts having texturized surfaces. For example, one such texturized graft is knitted, and includes a plurality of loops extending from the exterior surface of the graft. One known drawback associated with this configuration is that the knitted graft is, which is composed of loosely looped fabrics or threads, is very easily expansible. Such a graft may be subject to undesirable stretching and/or deformation within the body.

Another texturized graft is equipped with a plurality of loosely associated fibers, which may be affixed to or sewn to the exterior surface of the graft. Used appropriately, these configurations tend to reduce the incidence of leaking from around grafts in deformed vessels. However, neither of these texturized grafts sufficiently encourages tissue ingrowth into the graft. Such ingrowth is a natural bodily process that may be used to anchor the graft, and prevent undesirable migration.

Despite much work in this highly competitive field, there is still a need for a more secure means of anchoring a

bifurcated graft in the abdominal aorta. More generally, there is a need for a more secure means of anchoring a tubular graft in a primary vessel, be it a bifurcated endoluminal prosthesis, an aorto-uniliac or any of the above.

SUMMARY OF THE INVENTION

The present invention uses 'floaters,' or specifically tailored threads integrated with the graft, which extend outside of the weave of the graft material. Such threads may be viewed as forming loops. These floaters may be formed from material similar to that used to form the graft, or may be formed from a material otherwise specifically tailored to promote tissue ingrowth. The floaters promote tissue ingrowth where they are placed along the exterior of the graft body. As such, they may be used to promote tissue ingrowth along the entire length, or at specific locations of grafts including, but not limited to, bifurcated grafts, aorto-uniliac grafts or thoracic LIFEPATH® AAA stent-grafts (Edwards Lifesciences, LLC, Irvine, Calif.).

According to a feature of the present invention there is provided an endoluminal graft having vertical, horizontal or angled filaments forming the floaters, the filaments ranging from at least about 1 cm to about 20 cm in length. Each filament may be woven into the graft material to form one or more floaters.

According to another feature of the present invention there is provided an endoluminal graft having vertical, horizontal and/or angled strands to promote tissue ingrowth along the length of an outer face of the graft member.

According to still another feature of the present invention there is provided an endoluminal graft having vertical, horizontal and/or angled strands to promote tissue ingrowth, and to resist migration, kinking, separation and perigraft blushing, or endoleak.

According to yet a still further feature of the present invention there is provided an endoluminal graft having vertical, horizontal and/or angled strands to promote tissue ingrowth along the length of an outer face of the graft member while providing a smooth inner surface for the reconstructed vessel lumen.

In a preferred embodiment, the present invention comprises a woven vascular graft adapted for placement in a primary blood vessel that is suited to bridge a vessel side branch, the graft having a texturized exterior surface designed to increase tissue in growth. The graft comprises a tubular structure defining an outer surface, a first portion of the outer surface being sized to contact and support the blood vessel on one side of the side branch, and a second portion of the outer surface being sized to contact and support the blood vessel on the other side of the side branch. The tubular structure defines an aperture for alignment with the side branch so as to permit blood flow between the blood vessel and the side branch.

In one embodiment of the present invention, the texturized exterior surface takes the form of plurality of horizontal, vertical and/or otherwise angled threads extending from the surface of the graft. Such exterior surface will be referred to as having "towel" type threads. An alternate texturized exterior surface takes the form of a plurality of fibrous strands extending from the surface of the graft in a substantially angled, vertical or horizontal form with spaces for rows of threads skipped. Such exterior surface will be referred to as having a "fibrous" texture.

A still further alternate texturized exterior surface may have loose, vertical strands extending along the length of the graft surface. The integration of the texturized fibers with the woven graft in this manner serves to encourage the ingrowth of tissue from the wall of the blood vessel into the graft. Such ingrowth anchors the graft in position in the vessel and ensure compliance with morphology changes in the vessel over time, in addition to preventing kinking, migration or narrowing of the graft. It is known to those skilled in the art that empirical generation of a cellular matrix is promoted by having aspects or elements of a precursor to the cellular infrastructure which is to be created present at the situs of neointimal regeneration. With the present invention, the ability of the graft elements to seed and become incorporated into the cellular matrix ab inito has been show to promote a rapid and pervasive ingrowth.

The exterior surface of the graft may be designed to include a plurality of these surfaces. By way of example, the exterior surface may have a cuff, or extension portion, of towel type threads extending around the circumference of the ends of the graft. Such threads may have an angled orientation relative to the graft surface. The remainder of the exterior surface may be smooth. Alternatively, it may be covered with fibrous strands or loose vertical strands.

A preferred embodiment of the present invention is a bifurcated endoluminal prosthesis having a plurality of floater threaded portions separated by gaps or spaces along at least a substantial portion of the graft body.

An alternate preferred embodiment includes chevron-shaped, angled portions spanning predetermined aspects of an endovascular graft which may be an aorto-uniliac graft, a bifurcated graft or a thoracic graft.

In a further aspect, the invention provides a fibrously outer covered vascular graft system adapted for placement in a primary blood vessel and adjacent a vessel side branch. The system includes a tubular support graft including a first tubular structure sized to contact and support the blood vessel on one side of the side branch, and a second tubular structure spaced from and connected to the first tubular structure and sized to contact and support the blood vessel on the other side of the side branch. The system further includes a tubular primary graft sized to co-axially couple with the first tubular structure.

A further understanding of the nature and advantages of the invention will become apparent by reference to the remaining portions of the specification and drawings.

BRIEF DESCRIPTION OF THE DRAWINGS

FIG. **1** is a sectional view through an abdominal aorta showing the branching renal and iliac arteries, and illustrating one embodiment of a graft of the present invention for supporting a trunk portion of a bifurcated graft, shown in phantom;

FIG. **2** is a perspective view of the graft of FIG. **1**;

FIG. **3** is a perspective view of an alternative graft in accordance with the present invention having two planar bridging members;

FIG. **4** is a perspective view of a further graft of the present invention having two wire-like bridging members;

FIG. **5** is a perspective view of a further graft of the present invention having four bridging members;

FIG. **6** is a sectional view of the abdominal aorta in the region of the renal arteries illustrating a still further embodiment of a graft of present invention used to support the trunk portion of a bifurcated graft, shown in phantom;

FIG. **7** is a perspective view of the graft of FIG. **6**;

FIG. **8** is an elevational view of the graft of FIG. **6** showing certain axial dimensions;

FIG. **9** is an axial sectional view of an abdominal aorta in the region of the renal arteries showing certain anatomical dimensions;

FIG. **10** is a perspective view of the exterior surface of the graft according to one embodiment of the present invention;

FIG. **11** is a perspective view of the exterior surface of the graft according to one embodiment of the present invention; and

FIG. **12** is a perspective view of the exterior surface of the graft according to an embodiment of the present invention.

DETAILED DESCRIPTION

The present invention provides a woven, tubular graft having a selected, texturized exterior surface. The exterior surface of the graft is 'texturized' by the presence of floaters. The floaters are formed during the weaving process by adding fibers lying along the warp of the weave. These additional fibers are partially integrated into the weave of the graft material. That is, each additional fiber skips one or more of the perpendicular fibers by not alternatively extending over, and under, adjacent perpendicular fibers. In this manner, sections of the floater fibers are woven into, and integrated with, the graft material, and sections of the floater fibers lie along the exterior of the graft surface. The floater fibers may be positioned over the entire exterior surface of the graft or at selected locations on the graft. For example, the floaters may form 'cuffs' around the proximal and distal ends of the graft. Alternatively, the floaters may be placed in a geometric pattern. By way of example, and not of limitation, the floaters may be arranged in straight lines, angled lines, spaced-apart groups or patterns. The tension of each floater fiber may be selected by the manufacturer of the graft material during the weaving process. In this manner, the floaters may be loose or relatively taut against the graft surface. That is, the floaters may either loosely extend from the graft surface, or be tightly laid along the surface.

These floaters may be provided in parallel strips, parallel bands, or in groups forming a geometric pattern. Alternatively the floaters, or strands, may be placed in a geometric pattern. Such geometric pattern may be formed by individual strands, or by groups of strands. Still further alternatively, the strands may intersect and/or overlap one another. The floaters may range in length from at least about 0.5 mm to about 10 mm, but are preferably from at least about 4 mm to about 7 mm.

FIG. **1** illustrates a graft **20** of the present invention deployed within a primary vessel, in this case the abdominal aorta **22**. A pair of side branches **24** is shown intersecting the primary vessel **22** at approximately the same axial location across the vessel. In the context of an abdominal aorta **22**, two important side branches are the renal arteries **24**, as shown. The abdominal aorta **22** continues downward from the renal arteries **24** and bifurcates at a Y-junction **26** into the left and right iliac arteries **28**.

Bands of floaters **35** may be seen extending around the proximal and distal ends of the graft **20**. The floaters **35** are extending in a direction that is substantially parallel to the length of the graft **20**. The strands which form the floaters **35** may range from at least about 1 cm in length to about 20 cm in length. The term "length" used here refers to the length of the section of the strand that extends from one end of the graft to the other end of the graft **20**. The distance between the location on the graft where a floater originates and the location on the graft where a floater terminates may be same as, or less than, the length of the floater.

The tubular graft of the present invention may support another tubular graft in the primary vessel in proximity to a side vessel. It should therefore be understood that although the drawings and description involve a graft in the abdominal aorta for supporting another graft in the region of the renal arteries, the same principles apply whichever primary vessel or side vessel is involved. For example, as illustrated in FIG. **1**, the graft **20** could be used in the vicinity of a side branch **30** in the iliac arteries **28**. Representative conditions suitable for repair with the grafts of the present invention include the abdominal aortic aneurysm (AAA) described herein, a thoracic aortic aneurysm (TAA), and an aortic uni-iliac (AUI) aneurysm. For purpose of explanation, however, the term "side branch" will be used interchangeably herein with "renal artery," and the term "primary vessel" will be used interchangeably with "abdominal aorta."

As illustrated in FIG. **1**, the graft **20** helps anchor a trunk portion **34** of a bifurcated graft **36**, shown in phantom. The bifurcated graft **36** typically comprises the trunk portion **34** that diverges at a septum **38** into a pair of legs **40**. One or both of the legs **40** may extend a sufficient distance to form a seal within the iliac arteries **28**, or tubular extensions **42** may be provided for this purpose. The end result is that the bifurcated graft **36** (and optional tubular extensions **42**) extends from a healthy portion **44** of the abdominal aorta **22** to both of the iliac arteries **28**, spanning an aneurysmic region **46**. Once the bifurcated graft **36** is in place, blood flows therethrough and blood pressure is reduced between the aneurysm **46** and the exterior of the graft. Ultimately, the aneurysm **46** collapses inward around the graft, which remains in place.

With reference to FIGS. **1** and **2**, the graft **20** of the present invention comprises a first tubular section **50** and a second tubular section **52** connected via at least one bridging member **54**. The first tubular section **50** is spaced from the second tubular section **52** across a gap that, in conjunction with the bridging member **54**, defines an aperture **56** for blood flow. If the first and second tubular sections **50**, **52** are co-linear, then the bridging member **54** is generally axially disposed. Alternatively, if the graft **20** is intended for implantation in a curvilinear vessel, the first and second tubular sections **50**, **52** may be aligned along a curvilinear axis, in which case the bridging member **54** will also be generally disposed along the same curve. Still further, the graft **20** may be multi-curvate, for example S-shaped, in which case the first and second tubular sections **50**, **52** and bridging member **54** will follow the multiple curves.

As illustrated in FIG. **1**, the aperture **56** is aligned with at least one of the side branches **24**. In a preferred application, the graft **20** is used to support a bifurcated graft **36** in proximity with the renal arteries **24**, and thus defines two apertures **56**, each aligned with one of the renal arteries. In this context, the first tubular section **50** is secured in contact with a supra-renal portion of the abdominal aorta **22**, while the second tubular section **52** is secured in contact with an infra-renal portion. The apertures **56** are sized large enough so that no portion of the graft **20** resides in the blood flow path of the renal arteries **24**, and also so that renal arteries that are slightly axially offset from one another can be accommodated.

With specific reference to FIG. **2**, the graft **20** comprises a tubular graft body **60** internally supported by a stent **62**. The tubular graft body **60** may be formed of one or more pieces, typically of a biocompatible fabric such as polyester (e.g., polyterepthalate). Alternatively, the graft body **60** may be an extruded PTFE tube. In a particular preferred embodiment, the graft body **60** is one piece, with the apertures **56** formed by diametrically-opposed, generally

oval-shaped windows **64** cut in the body and extending circumferentially around the body into proximity with one another. Two bridge segments **66** of the graft body **60** extend between the first and second tubular sections **50**, **52** of the graft and separate the windows **64**. Preferably, the bridge segments **66** extend circumferentially around the graft body **60** a small arc in relation to the adjacent windows **64** so as to maximize the size of the blood flow apertures **56**. In one embodiment, the bridge segments **66** each circumferentially extends between about 1–90° around the graft body **60**, and more preferably each extends about 5–10°.

The blood flow apertures **56** are sized to enable alignment with side branches of varying sizes. Of course, the particular size is defined by the axial dimension and the circumferential arc of the windows **64**, which depends on the overall graft diameter and length. For instance, a graft that is designed for small arteries and small side branches will have a reduced diameter and reduced window size. Additionally, if the graft is intended to bridge only one side branch then only one window is required. In a preferred embodiment, for use in the abdominal aorta **22** to bridge the renal arteries **24**, the graft **20** has a diameter of between about 19 and 30 mm, and a length of between about 22 and 46 mm. The opposed windows **64** have an axial length of between about 6 and 20 mm, and extend circumferentially around the graft body **60** between about 90° and 189°. The renal arteries **24** typically have a diameter of between about 8–10 mm, and thus the windows **64** are desirably oversized to ensure open blood flow through the renals, and to accommodate offset or otherwise misaligned pairs of renals.

The stent **62** actually comprises a first stent portion within the first tubular section **50**, and a second stent portion within the second tubular section **52**. The first and second stent portions may be substantially similar in construction, or may be configured differently, as desired. Those of skill in the art will understand that a variety of different types of stents may be used to internally support a tubular graft body.

In a preferred embodiment, the stent **62** comprises a plurality of separate, spaced-apart wireforms **70**, each formed in an undulating, or sinusoidal pattern. Each of the wireforms **70** includes alternating peaks and valleys, with either the peaks or valleys being woven through the graft body. More specifically, as seen in FIG. **2**, there are three axially-spaced rows of wireforms **70** in the first tubular section **50**, and four axially-spaced rows of wireforms in the second tubular section **52**. Either the peaks or valleys of these rows of undulating wireforms are woven through slits **72** formed in the graft body **60**. In this manner, the wireforms **70** are prevented from migrating axially within the graft body **60** with respect to one another, and thus provide a fairly uniform inner support structure for the flexible graft body. As mentioned, each wireform is either radially self-expandable to the configuration shown, or is capable of plastic deformation when balloon-expanded. In either case, the stent **62** (comprising the array of wireforms **70**) compresses the graft body **62** against the inner wall of a tubular blood vessel to form a fluid seal therebetween. Moreover, certain materials and/or sleeve-like structures are available to enhance the seal between the exterior of the graft **20** and the vessel wall, and may be combined with the present invention.

A plurality of crimps **74** is visible on the exterior of the graft body **62**. The crimps **74** join free ends of each wireform **70**, which comprise one or more wire segments bent into the undulating pattern, and into the annular shape required. Though the crimps **74** are not sharp, they provide an irregular surface structure on the exterior of the graft **20**, and thus help secure the graft in position within the vessel. A plurality of floaters **35** which are designed to increase tissue ingrowth may also be seen extending around one end of the second tubular section **52**.

The bridging member **54** seen in FIGS. **1** and **2** comprises a reinforcing strut **80** and the aforementioned bridge segments **66** of the graft body **60**. The reinforcing strut **80** is a relatively rigid elongate member extending between the first and second tubular sections **50**, **52** of the graft **20**. In a preferred embodiment, the reinforcing strut **80** is a biocompatible metal (e.g., stainless-steel) strip or rod secured at each end to either the graft body **60** or the stent **62**. If the ends of the reinforcing strut **80** are secured to the graft body **60** as shown, sutures are typically used to sew an eyelet, hook or other such feature (not shown) provided on each end of the reinforcing strut. If the ends of the reinforcing strut **80** are secured to the stent **62**, crimps are preferably used between juxtaposed ends of the closest wireforms and the reinforcing strut. As shown, the reinforcing struts **80** are desirably located to the outside of the bridge segments **66**, although the reverse configuration is contemplated as well.

The bridging members **54** serve to anchor one of the first and second tubular sections **50**, **52** of the graft **20** with respect to the other, and desirably maintain the spacing between the tubular sections, while at the same time present very little in the way of structure that might occlude or otherwise interfere with the blood flow between the primary vessel **22** and the affected side branch **24**. The bridging members **54** must have tensile strength to withstand migratory forces that may tend to separate the first and second tubular sections **50**, **52**. In an exemplary configuration, the upstream section **50** or **52** serves to anchor the downstream section by virtue of their connection with the bridging members **54**. In addition, the bridging members **54** may be relatively rigid in the sense that they have column strength sufficient to prevent the tubular sections **50**, **52** from migrating toward each other after implantation.

The bridging members **54** have a radial dimension that is approximately the same as the rest of the graft **20**; that is, they do not project radially into or out from the side wall of the graft. The circumferential width of each bridging member **54** depends on the intended use for the graft **20**. That is, if the graft **20** is to be used in the abdominal aorta **22** to bridge the renal arteries **24** as shown in the drawings, then there are two bridging members **54** diametrically spaced apart of relatively narrow circumferential width. In this way, the bridging members **54** each axially extend along the wall of the abdominal aorta **22** at 90° orientations from the openings to the renal arteries **24**, and there is no chance of occluding blood flow between the abdominal aorta **22** and renal arteries **24**. Alternatively, if there is only one side branch then there need only be one bridging member of relatively greater circumferential width than as shown. That is, the bridging member might extend 180° or more around the graft, with the corresponding window opening up the remaining portion. In general, as long as care is taken to orient the window(s) in registration with the side branch or branches, then the bridging member(s) will not occlude blood flow.

The embodiment of FIGS. **1** and **2** shows relatively rigid bridging members **54** that are constructed of, for example, wires. Alternatively, the bridging members **54** may be strips of biocompatible fabric or even sutures that provide tensile strength to prevent the downstream tubular section **52** from migrating with respect to the upstream section **50**. In the illustrated example, the upstream section **50** anchors the graft **20**, and in particular the downstream tubular section

52, with respect to the renal arteries **24**. In this context, one or the other of the tubular sections **50**, **52** may be designed to better anchor the graft **20** in the primary artery **22**, and the other may perform another function, such as supplementing a damaged section of the artery so that another graft may be secured adjacent the side branch **24**. Of course, however, both tubular sections **50**, **52** can be constructed to have identical anchoring and vessel supporting characteristics if the graft **20** is used to repair a damaged length of the vessel that extends upstream and downstream of the side branch.

FIG. **3** illustrates an alternative graft **90** of the present invention having a first tubular section **92** separated from a second tubular section **94** across a gap **96** and connected across the gap by two bridging members **98**. Again, the graft **90** comprises a graft body **100** and an internal stent **102**. The graft body **100** may be a tubular biocompatible fabric, and in the illustrated embodiment is separated across the gap **96** into two tubular portions in the respective first and second tubular sections **92**, **94**. Because the facing edges of the two tubular portions of the graft body **100** are circular, the gap **96** is tubular. The stent **102** again comprises a plurality of spaced-apart annular wireforms, although it should be noted that the first tubular section **92** only has a single wireform **104**. A plurality of floaters **35** which are designed to increase tissue ingrowth may also be seen extending around the first tubular section **92**.

The bridging members **98** are elongated planar bars or strips of relatively rigid material, such as stainless-steel or a suitable polymer connected directly to the stent **102** or to the graft body **100** in the first and second tubular sections **92**, **94**. Again, the bridging members **98** must have tensile strength to withstand migratory forces that may tend to separate the first and second tubular sections **92**, **94** after implantation, while at the same time must not occlude or otherwise interfere with the blood flow between the primary vessel and the affected side branch or branches. Therefore, instead of being relatively rigid, the bridging members **98** may be strips of fabric, such as polyester, or sutures for that matter.

FIG. **4** illustrates an alternative graft **110** of the present invention having a first tubular section **112** separated from a second tubular section **114** across a gap **116** and connected across the gap by two bridging members **118**. Again, the graft **110** comprises a graft body **120** and an internal stent **122**. The graft body **120** may be a tubular biocompatible fabric, and in the illustrated embodiment is separated across the gap **116** into two tubular portions in the respective first and second tubular sections **112**, **114**. In this case the facing edges of the two tubular portions of the graft body **120** are uneven by virtue of a plurality of notches **123**, and thus the gap **116** is uneven as well. The stent **122** again comprises a plurality of spaced-apart annular wireforms, with the first tubular section **112** having two wireforms and the second tubular section **114** having three.

A plurality of floaters **35** may be seen extending around both the first tubular section **112** and the second tubular section **114**. The floaters on both the first tubular section **112** and the second tubular section **114** extend along the exterior surface of the graft and are each individually generally parallel to the length of the graft **110**. The line extending around the circumference of the graft **110** that is formed by the floaters **35** is at an angle to the length of the graft **110**.

The bridging members **118** each comprises lengths of wire either separate from the stent **122** or defined by extensions of one or the wireforms. If the bridging members **118** are separate from the stent **122**, they are connected directly to the stent using a crimp **124**, for example, or are connected indirectly via stitching **126** to the graft body **120**. In an exemplary embodiment as illustrated, the bridging members **118** are connected via crimps **124** to free ends of the lowest wireform in the first tubular section **112** and sewn to the graft body **120** in the second tubular section **114**.

FIG. **5** illustrates a still further exemplary graft **130** of the present invention having a first tubular section **132** separated from a second tubular section **134** across a gap **136** and connected across the gap by four (4) bridging members **138**. Again, the graft **130** comprises a graft body **140** and a stent **142**. The graft body **140** is desirably a tubular biocompatible fabric. The stent **142** again comprises a plurality of spaced-apart annular wireforms, with the first tubular section **132** having a single wireform **144** disposed on the exterior of the graft body **140**. The external wireform **144** can either be woven through slits in the graft body **140** as described above, or may be secured thereto with the use of suture thread.

A plurality of floaters **35** which are designed to increase tissue ingrowth may also be seen extending around the second tubular section **134**, and generally forming two cuffs **101**. The floaters extend along the exterior surface of the graft and are each individually generally parallel to the length of the graft **110**.

The four bridging members **138** are distributed generally equidistantly around the circumference of the graft **130** and each comprises a narrow strip of fabric **146** and a reinforcement strut **148**. Again, the reinforcement struts **148** may be connected directly to the stent **142** using a crimp, for example, or are connected indirectly via stitching **149** to the graft body **140**. The use of four bridging members **138** may be desirable for stability when smaller branching vessels are involved so that the windows defined between the bridging members need not be as large as the previous embodiments.

FIGS. **6** and **7** illustrate a still further embodiment of a graft **150** of the present invention that defines a tubular structure having a first portion **152** and a second portion **154** separated from the first portion across a gap **156**. Two bridging members **158** extend generally axially between and couple the first and second portions **152**, **154** to prevent their relative movement before during and after implantation. In this embodiment, the first portion **152** of the tubular structure is defined solely by a stent **160**, while the second portion **154** is defined by a stent **162** internally supporting a tubular graft body **164**. As shown in FIG. **7**, the second portion **154** of graft **150** is additionally equipped with a plurality of floaters **35** which are designed to increase tissue ingrowth may also be seen extending around the second portion **154**. The floaters extend along the exterior surface of the graft and are each individually generally parallel to the length of the graft **110**.

The upper stent **160** comprises an annular wireform **166** having alternating peaks **168** and valleys **170** and contoured curvilinear segments **172** extending therebetween. The curvilinear segments **172** are shaped so as to nest together when the graft **150** is in a radially constricted state, so as to enable smaller compaction of the graft. The wireform **166** includes one or more segments connected into the annular shape by one or more crimps **174**. The lower stent **162** includes a plurality of axially-spaced undulating wireforms woven through the graft body **164**, as previously described.

The bridging members **158** each comprise lengths of wire either separate from the stents **160**, **162** or defined by extensions of one or the wireforms. If the bridging members **158** are separate from the stents **160**, **162**, they are connected directly to the upper stent **160** using a crimp **176**, and are

connected directly to the lower stent **162** using a crimp or indirectly via stitching **178** to the graft body **164**. In an exemplary embodiment as illustrated, the bridging members **158** are connected via crimps **176** to free ends of the wireform **166** in the first portion **152** and sewn to the graft body **164** in the second portion **154**.

FIG. **6** shows the graft **150** in place within a primary vessel **180** (e.g., the abdominal aorta) and bridging two oppositely-directed vessel side branches **182** (e.g., the renal arteries). The first portion **152** is located to contact and support the primary vessel **180** on one side of the side branches **182**, while the second portion **154** is located to contact and support the primary vessel on the other side of the side branches. The gap **156** is positioned to permit blood flow between the primary vessel **180** and side branches **182**, as indicated by the flow arrows **184**. The bridging members **158** extend axially across the gap **156** against the wall of the primary vessel **180** at approximately 90° orientations from the side branches **182**. Another graft **186** (e.g., the trunk of a bifurcated graft) is seen positioned within the second portion **154**. In this way, the graft **186** is secured within the uniform and tubular second portion **154**, which in turn is anchored within the primary vessel **180** from its own contact with the vessel wall, and by virtue of its connection to the first portion **152** via the bridging members **158**. This system of supporting one graft with another permits graft positioning very close to the vessel side branches **182**, and is especially effective when the primary vessel is distended even very close to the side branches.

The axial dimensions of the various grafts disclosed herein may be selected to match the particular anatomical dimensions surrounding the affected side branch. That is, the grafts, including two tubular sections with an aperture or gap therebetween and bridging members connecting the sections, are sized so as to permit blood flow through the affected side branch and any adjacent side branches. For example, the graft **150** seen in FIGS. **6** and **7** is positioned so that the first portion **152** is above the renal arteries **182** and the second portion **154** is below the renals.

A more detailed depiction of the relative axial dimensions for the graft **150** and region of the abdominal artery **180** near the renals **182** is seen in FIGS. **8** and **9**. In addition to the renal arteries **182**, the openings for the superior mezzanteric artery **190** and the ciliac artery **192** are shown in FIG. **9**. These arteries typically project in the posterior direction, in contrast to the laterally-directed renals **182**, and are located close to but upstream of the renals. The distance from the lowest of the arteries **190** or **192** and the highest of the renals **182** is given as A, the distance from the upstream side of the highest of the renals **182** to the downstream side of the lowest of the renals is given as B, and the distance between the downstream side of the lowest of the renals to the end of the perceived healthy portion of the abdominal aorta **180** is given as C. In addition, the diameter of one of the renal arteries **182** is given as D. The axial dimensions of the graft **150** are given in FIG. **8** as: L for the overall for the tubular structure, L_1 for the first portion **152**, L_2 for the gap **156**, and L_3 for the second portion **154**.

In a preferred embodiment, L_2>D, and if the renal arteries **182** are offset, L_2>B. In addition, L_1 is preferably smaller than or equal to A, so that the first portion **152** does not occlude either of the arteries **190** or **192**. Finally, the length L_3 of the second portion **154** is desirably less than the length C of the healthy portion of the abdominal aorta **180**, but may be greater than C.

In a specific embodiment, for use in the abdominal aorta **180** to bridge the renal arteries **182**, the graft **150** has a diameter of between about 19 and 30 mm, and a length L of between about 22 and 46 mm. The renal arteries **182** typically have a diameter of between about 5–10 mm, and may be offset center-to-center up to 10 cm. Thus the gap **156** has an axial length L_2 of between about 6 and 20 mm, and is desirably oversized to ensure open blood flow through the renals and to accommodate offset or otherwise misaligned pairs of renals. The length L_1 for the first portion **152** is desirably about 6 mm, but may vary depending on need. The length C of the healthy portion of the abdominal aorta **180** should be at least 5 mm to enable the proper seal of the second portion **154** with the aorta, which is smaller than an endovascular repair would currently be indicated. The length L_3 of the second portion **154** is preferably at least 6 mm, more preferably about 10–20 mm. Of course, if the graft **20** is used to repair a longer section of vessel as a primary graft, the length L_3 of the second portion **154** can be longer than 20 mm, up to the currently accepted maximum length of straight tube vascular graft.

To ensure the proper size/configuration of graft, the surgeon first determines the anatomical landscape through the use of angioscopy; that is, by injecting a contrast media and visualizing flow through the affected vessels with an X-ray device. The dimensions noted in FIG. **9** can thus be obtained. A range of different sized grafts are preferably available, and the surgeon then selects the graft to match the anatomy in conformance with the above preferred guidelines.

During implantation, the surgeon can ensure proper placement and orientation of the grafts of the present invention with the use of radiopaque markers on the graft. For example, the stent structure, or portions thereof, could be radiopaque, or markers can be attached to the stent or graft body. In FIG. **7**, for instance, the wireform **160** and the upper wireform in the stent **162** are desirably radiopaque so as to enable the surgeon to monitor the approximate axial borders of the gap **156**. Furthermore, the bridging members **158** or crimps **176** may be radiopaque to enable rotational orientation with respect to the respective side branch or branches.

A method of supporting a tubular primary graft in a primary blood vessel adjacent a vessel side branch, in accordance with the present invention can be illustrated with reference to the embodiment of FIG. **6**. First, the tubular graft **150** is implanted in the primary vessel **180** such that the first portion **160** contacts and supports the primary vessel on one side of a side branch **182**, in this case the two renal arteries, and the second portion **154** contacts and supports the primary vessel on the other side of the side branch. Implantation of the tubular graft **150** can be accomplished by releasing a self-expandable version of the graft from within a catheter sheath in the proper location, or positioning a balloon-expandable version of the graft and inflating a balloon within the interior of the graft. A primary graft **186** is then delivered in a radially constricted state to a position overlapping the end of the second portion **154** and radially expanded into contact therewith. Again, the primary graft **186** may be either self-expanding or balloon-expanding.

An alternative method comprises implanting the tubular graft **150** after the implantation of the primary graft **186**. That is, the second portion **154** of the tubular graft **150** is self- or balloon-expanded outward into contact with the primary graft **186**. Indeed, the primary graft **186** may be implanted for a significant period of time before the need for the supporting function of the tubular graft **150** is recognized.

As mentioned above, one tubular portion of the graft may perform an anchoring function to maintain the position of

the other portion that may or may not have the same anchoring characteristics. For instance, the graft portion upstream of the side branch may anchor the downstream portion, which in turn reinforces, supplements or seals with the primary vessel so as to enable placement of another graft in that location. The present invention has been described so far in terms of self- or balloon-expandable stents for anchoring, but those of skill in the art will recognize that there are other ways to anchor. For instance, staples, bent or corkscrew, are becoming more sophisticated and effective, and may be used for anchoring. For that matter, any means for anchoring one portion of the graft can be used.

As shown in FIGS. **10**, **11** and **12**, the graft of the present invention may have an exterior surface that is designed to promote tissue ingrowth and prevent leaking. Such surface will also assist in anchoring the graft in the vessel. The graft as shown in FIG. **10** has an exterior surface that is covered in short, looped, "towel-like" floaters **37** extending from the surface of the graft **20**. These towel-like floaters **37**, which do not significantly impact the porosity of the graft material, serve the dual purpose of preventing endoleak and encouraging tissue ingrowth into the woven graft from which they extend. As discussed in greater detail above, the towel-like floaters are incorporated with the woven graft during the weaving process. The lengths of the loop may be varied, for example by increasing the length of the floater without increasing the distance between its end points (the points at which the fiber forming the floater extend into the woven graft material).

The exterior surface of the graft **20** as shown in FIG. **11** has two textures. First, there is a cuff of towel-like floaters **37** extending around the circumference of the graft **20** towards its ends, forming a cuff. In one embodiment of the present invention, this cuff extends between 1 and 3 centimeters from each end along the length of the graft. In the preferred embodiment, the cuff extends approximately 2 cm from each end along the length of the graft. However, one skilled in the art would realize that this length would vary depending on the dimensions of the graft. Secondly, the graft **20** has a plurality of strands **39** extending along the length of the graft parallel to the exterior surface. These strands **39**, which are typically longer than the towel-like floaters **37**, are particularly suited for encouraging ingrowth along aneurysmic areas of the vessel. The two textures of the exterior of the graft serve the dual purpose of preventing endoleak and encouraging tissue ingrowth into the woven graft from which they extend.

The towel-like floaters **37** are typically present on the exterior surface of the graft in amounts ranging from at least about 138 'picks per inch' (ppi) to about 222 ppi across the graft, while the vertical measure of ppi remains variable. Those skilled in the art will readily understand that variation of the density and concentration of floaters creates higher degrees of cellular matrix seeding, and therefore concomitant tissue ingrowth. Similarly, the ability to combine more than one texture in a 'tapestry-like' fashion is understood by artisans as permitting stent-graft users to create product with varying degrees of attachment.

Like the graft **20** shown in FIG. **11**, the exterior surface of the graft as shown in FIG. **12** has two textures. First, there are cuffs of towel-like threads **37** extending around the circumference of the graft **20** towards its ends. In one embodiment of the present invention, this cuff extends between 1 and 3 centimeters from each end along the length of the graft. In the preferred embodiment, the cuff extends approximately 2 cm from each end along the length of the graft. However, one skilled in the art would realize that this length would vary depending on the dimensions of the graft. Secondly, the graft **20** is equipped with a plurality of fibrous, angled floaters **41** extending from the exterior surface of the graft **20**. As shown in FIG. **12**, each angled floater **41** intersects at least one other angled floater. The angled floaters **41** are typically present on the exterior surface of the graft in amounts ranging from at least about 138 to about 222 ppi, preferably from about 150 to about 210 PPI. As discussed above, variation in the number, concentration and relative densities are within the ambit of the instant teachings, and would become clear to those having a modicum of skill upon a review of the claims appended hereto.

One skilled in the art would realize that such angled floaters **41** may alternatively be aligned so that they lie parallel to each other, or in sections of floaters **41** lying parallel to one another, so that they do not intersect another floater. These angled floaters **41**, which are typically longer than the towel-like floaters **37**, are particularly suited for encouraging ingrowth along aneurysmic areas of the vessel.

While the foregoing is a complete description of the preferred embodiments of the invention, various alternatives, modifications, and equivalents may be used. Moreover, it will be obvious that certain other modifications may be practiced within the scope of the appended claims. The presently disclosed embodiments are therefore to be considered in all respects as illustrative and not restrictive, the scope of the invention being indicated by the appended claims, rather than the foregoing description, and all changes that come within the meaning and range of equivalency of the claims are therefore intended to be embraced therein.

What is claimed is:

1. A vascular graft adapted for placement in a primary blood vessel, comprising:

a woven tubular structure defining an outer surface characterized by a plurality of thread portions extending from and lying along the exterior of the woven tubular structure, the outer surface being sized to contact and support the blood vessel, wherein the thread portions are selected to increase tissue ingrowth, and further wherein the plurality of thread portions define first and second texture portions.

2. The vascular graft as in claim **1**, wherein the thread portions are hoop-like protrusions formed from a filament from at least about 1 cm to about 22 cm in length.

3. The vascular graft as in claim **1**, wherein the thread portions are formed from a fiber that is woven into the tubular structure with a picks per inch range of from at least about 138 to about 222.

4. The vascular graft as in claim **1**, wherein the configuration of said tubular structure is selected from the group consisting of a straight tube, an aorto-uniliac conversion graft, a bifurcated endoluminal prosthesis, and a thoracic graft device.

5. The vascular graft as in claim **1**, wherein the thread portions are selected from the group consisting of vertical thread portions, horizontal thread portions, angled thread portions, loose thread portions and taut thread portions.

6. A vascular graft adapted for placement in a primary blood vessel, comprising:

a woven tubular structure defining an outer surface characterized by a first and a second surface texture and being sized to contact and support the blood vessel, the woven tubular structure having a body portion and first and second cuffs located at first and second ends of the body portion, the cuffs configured to engage the blood vessel and promote tissue ingrowth, and further wherein:

the first surface texture comprises a plurality of thread portions extending generally outwardly from the first and second cuffs, in the form of outwardly extending hoops having a first height, and

the second surface texture comprises a plurality of thread portions extending generally outwardly from the body portion in the form of outwardly extending hoops having a second, different height.

7. The vascular graft as in claim **6**, wherein the thread portions are formed from a filament from at least about 1 cm to about 22 cm in length.

8. The vascular graft as in claim **6**, wherein the thread portions are formed from a fiber that is woven in the tubular structure.

9. The vascular graft as in claim **6**, wherein the hoops of the first surface texture form a dense pile configuration.

10. The vascular graft as in claim **6**, wherein the hoops of the second surface texture form elongated strands.

11. The vascular graft as in claim **6**, wherein the cuff extends from at least about 1 cm to about 5 cm along the length of the graft.

12. The vascular graft as in claim **6**, wherein the configuration of said tubular structure is selected from the group consisting of a straight tube, an aorto-uniliac conversion graft, a bifurcated endoluminal prosthesis, and a thoracic graft device.

13. A vascular graft adapted for placement in a primary blood vessel, comprising:

an elongated woven tubular structure having a first and a second end and an outer surface which is circumferentially reinforced along its length by a plurality of separate, spaced-apart wires, each of which has a generally sinusoidal shape, wherein the outer surface of the graft is characterized by a plurality of differently shaped thread portions extending from the outer surface of the woven tubular structure, the outer surface being sized to contact and support the blood vessel and characterized by a plurality of texture portions, and further wherein the thread portions are configured to increase tissue ingrowth.

14. The vascular graft as in claim **13**, the fibers are formed from a filament woven into the tubular structure.

15. The vascular graft as in claim **13**, wherein the plurality of thread portions define first and second texture portions, the first texture portion being characterized by a plurality of outwardly extending loop portions and located circumferentially around each end of the woven tubular structure.

16. The vascular graft as in claim **13**, wherein the thread portions are selected from the group consisting of vertical thread portions, horizontal thread portions, angled thread portions, loose thread portions and taut thread portions.

17. A method of promoting tissue ingrowth into a tubular graft in a primary blood vessel, comprising:

providing a woven tubular graft having a body portion and an extension portion, wherein the graft has a plurality of fibers extending along the outer surface and forming a texturized outer surface having first and second texture portions;

delivering the tubular graft into an implant position; and

deploying the tubular graft so that the tubular section contacts and supports the blood vessel.

18. The method as in claim **17**, wherein the fibers extend into, and are incorporated with, the woven tubular graft.

19. The method as in claim **17**, wherein the fibers are formed from a filament that is woven into the tubular structure.

20. The method as in claim **17**, wherein the extension portion is characterized by a first texture and the body portion is characterized by a second, different texture extending circumferentially around a central portion of the graft.

21. The method as in claim **20**, wherein the first texture is in the form of a plurality of looped thread portions.

22. The method as in claim **20**, wherein the second texture comprises a plurality of threads extending along the outer surface and lying parallel to a length of the graft.

23. The method as in claim **20**, wherein the second texture comprises a plurality of threads extending along the outer surface and lying perpendicular to a length of the graft.

24. A method of promoting tissue ingrowth into a tubular graft in a primary blood vessel, comprising:

providing an elongated tubular structure having first and second ends and an outer surface sized to contact and support the blood vessel, the tubular structure being circumferentially reinforced along its length by a plurality of separate, spaced-apart wires, each of which has a generally sinusoidal shape, wherein the outer surface of the graft is characterized by a plurality of differently shaped thread portions defining loop members extending from and lying along the outer surface of the woven tubular structure and defining first and second texture portions, and further wherein the thread portions are configured to increase tissue ingrowth;

delivering the tubular graft into an implant position; and

deploying the tubular graft so that the tubular section contacts and supports the blood vessel.

25. The method of promoting tissue ingrowth as in claim **24**, wherein the fibers are formed from a filament that is woven into the tubular structure.

26. The method of promoting tissue ingrowth as in claim **24**, wherein the configuration of said tubular structure is selected from the group consisting of a straight tube, an aorto-uniliac conversion graft, a bifurcated endoluminal prosthesis, and a thoracic graft device.

27. A vascular graft adapted for placement in a primary blood vessel, comprising:

a woven tubular structure defining an outer surface characterized by a plurality of thread portions extending from and lying along the exterior of the woven tubular structure, the outer surface being sized to contact and support the blood vessel, wherein the thread portions are hoop-like protrusions formed from a filament from at least about 1 cm to about 22 cm in length, and further wherein the thread portions are selected to increase tissue ingrowth.

28. A vascular graft adapted for placement in a primary blood vessel, comprising:

a woven tubular structure defining an outer surface characterized by a plurality of thread portions extending from and lying along the exterior of the woven tubular structure, the outer surface being sized to contact and support the blood vessel, wherein the thread portions are selected to increase tissue ingrowth, and further wherein the thread portions are formed from a fiber that is woven into the tubular structure with a picks per inch range of from at least about 138 to about 222.

29. A vascular graft adapted for placement in a primary blood vessel, comprising:

a woven tubular structure defining an outer surface characterized by a plurality of thread portions extending from and lying along the exterior of the woven tubular structure, the outer surface being sized to contact and support the blood vessel, wherein the thread portions are selected to increase tissue ingrowth, and further

wherein the plurality of thread portions define first and second texture portions, the first texture portion being characterized by a plurality of outwardly extending loop portions and located circumferentially around each end of the woven tubular structure.

30. A woven tubular structure defining an outer surface characterized by a plurality of floaters extending from and lying along the exterior of the woven tubular structure, the outer surface being sized to contact and support the blood vessel, wherein each floater extends from the outer surface of the tubular structure at a first point and enters the outer surface of the tubular structure at a second point such that the length of each floater is approximately equal to the distance between the first and second points.

* * * * *