US006096052A

United States Patent [19]

Callister et al.

[11] **Patent Number: 6,096,052**

[45] **Date of Patent: Aug. 1, 2000**

[54] **OCCLUDING DEVICE AND METHOD OF USE**

[75] Inventors: **Jeffrey P. Callister**, Menlo Park; **William S. Tremulis**, Redwood City, both of Calif.

[73] Assignee: **Ovion, Inc.**, Redwood City, Calif.

[21] Appl. No.: **09/112,085**

[22] Filed: **Jul. 8, 1998**

[51] **Int. Cl.**[7] **A61B 6/20**; A61B 6/22

[52] **U.S. Cl.** **606/157**; 606/108

[58] **Field of Search** 606/157, 158, 606/108

[56] **References Cited**

U.S. PATENT DOCUMENTS

3,687,129	8/1972	Nuwayser	128/1 R
3,855,996	12/1974	Bolduc	128/1
4,503,569	3/1985	Dotter	3/1.4
4,606,336	8/1986	Zeluff	128/130
4,733,665	3/1988	Palmaz	128/343
4,869,268	9/1989	Yuon	606/158
4,964,850	10/1990	Bouton et al.	606/108
5,108,420	4/1992	Marks	606/157
5,163,958	11/1992	Pinchuk	623/11
5,176,692	1/1993	Wilk et al.	606/108
5,190,546	3/1993	Jervis	606/78
5,197,978	3/1993	Hess	623/1
5,303,719	4/1994	Wilk et al.	128/898
5,366,472	11/1994	Hillstead	606/194
5,382,261	1/1995	Palmaz	606/158
5,423,849	6/1995	Engelson et al.	606/191
5,443,500	8/1995	Sigwart	623/1
5,474,089	12/1995	Waynant	128/843
5,507,811	4/1996	Koike et al.	606/157
5,545,210	8/1996	Hess et al.	623/1
5,601,593	2/1997	Freitag	606/198
5,656,036	8/1997	Palmaz	623/12
5,766,203	6/1998	Imran et al.	606/198

FOREIGN PATENT DOCUMENTS

0 105 669	4/1984	European Pat. Off. .
WO 94/24944	11/1994	WIPO .

Primary Examiner—Paul J. Hirsch
Attorney, Agent, or Firm—Heller Ehrman White & McAuliffe

[57] **ABSTRACT**

A device for occluding a body lumen, and particularly contraceptive or sterilization device for occluding a reproductive tract or lumen to prevent the passage of reproductive cells through the tract or lumen, generally comprising a tubular member, and a mesh member, transversely disposed on the tubular member lumen. The mesh member is permeable to allow for tissue ingrowth, which produces a tissue impregnated mesh occluding the body lumen. The occluding device of the invention can be used in the fallopian tubes of a female patient, the vas deferens of a male patient, or other body lumen.

42 Claims, 9 Drawing Sheets

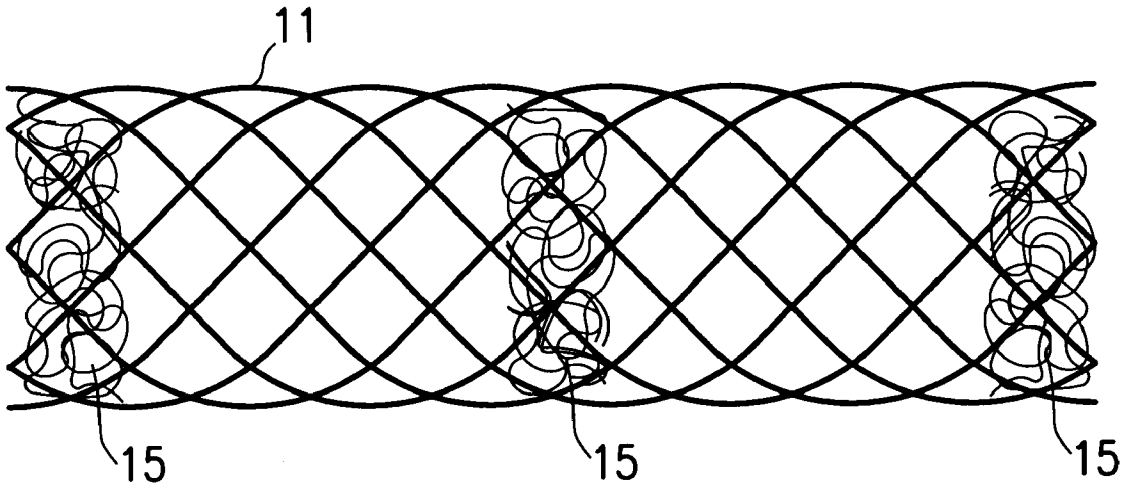

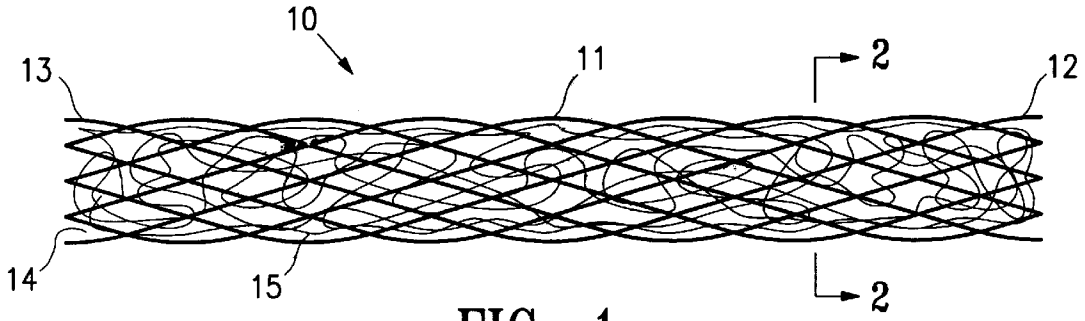

FIG. 1

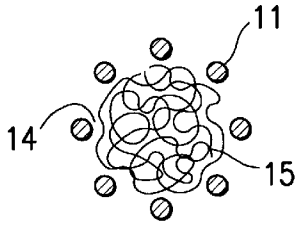

FIG. 2

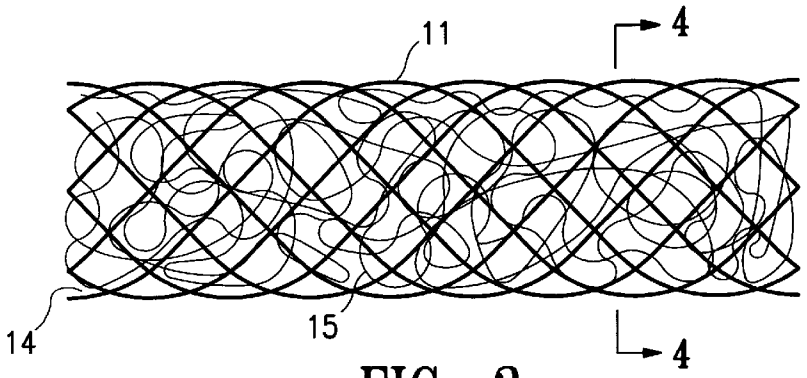

FIG. 3

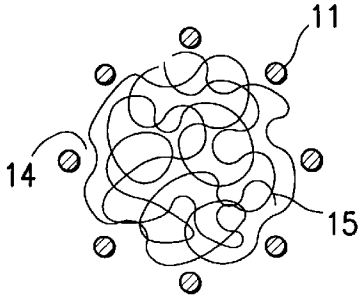

FIG. 4

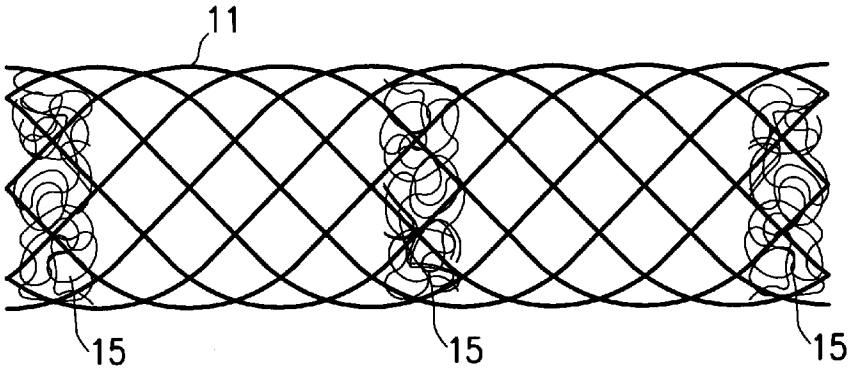

FIG. 5

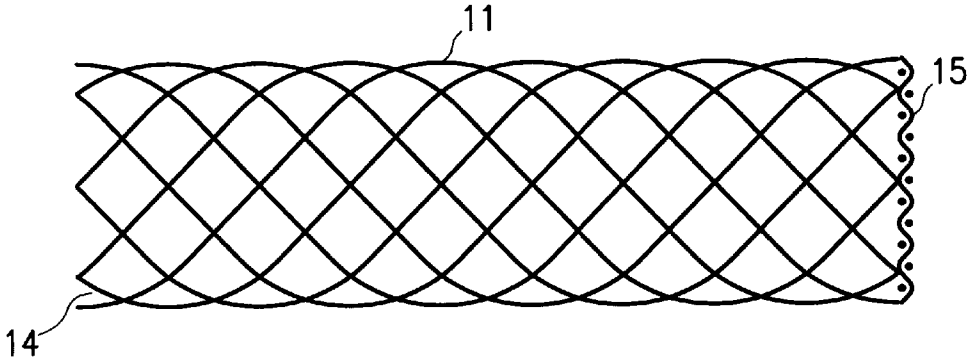

FIG. 6

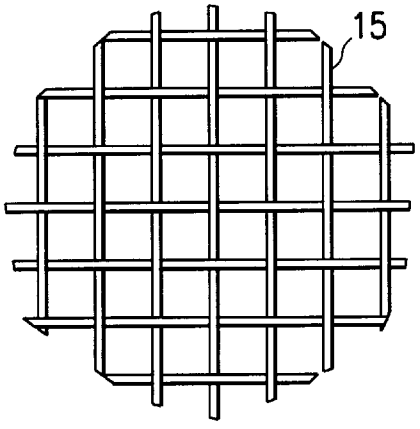

FIG. 7

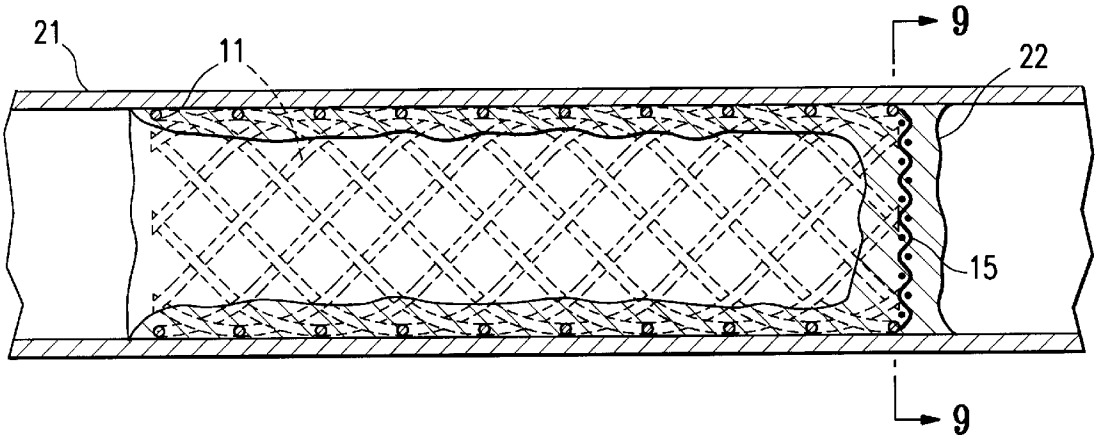

FIG. 8

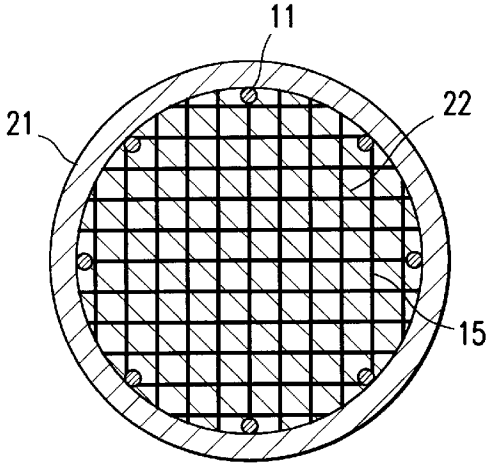

FIG. 9

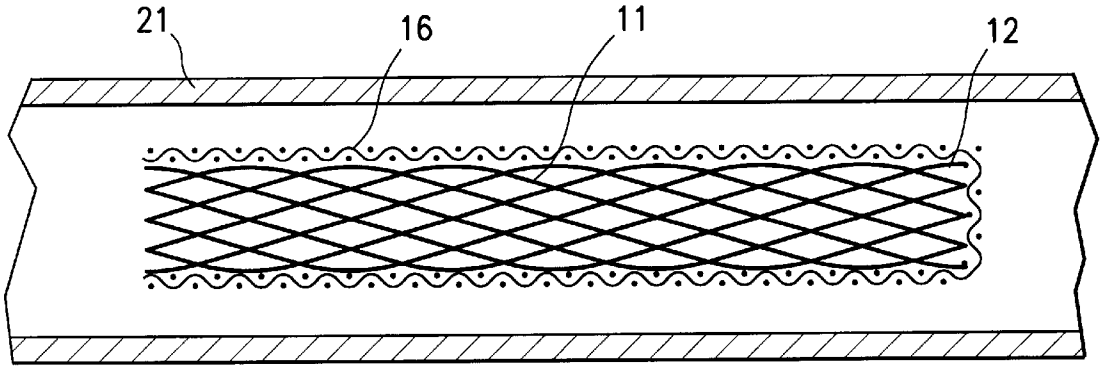

FIG. 10

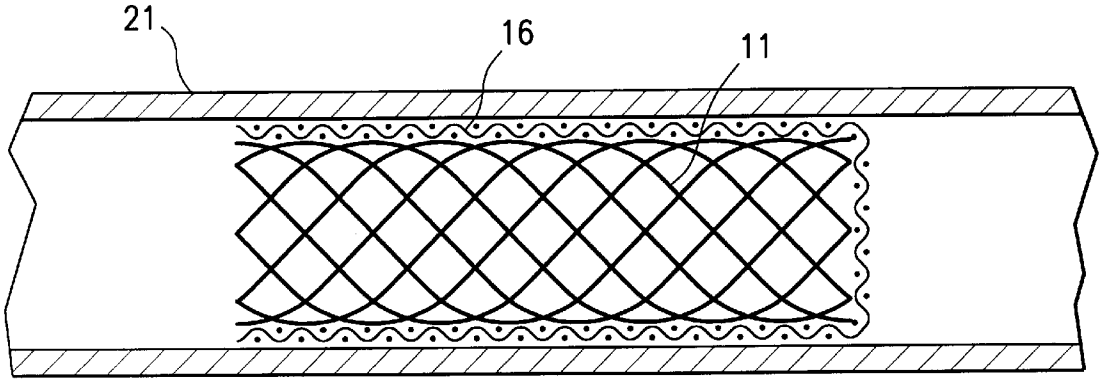

FIG. 11

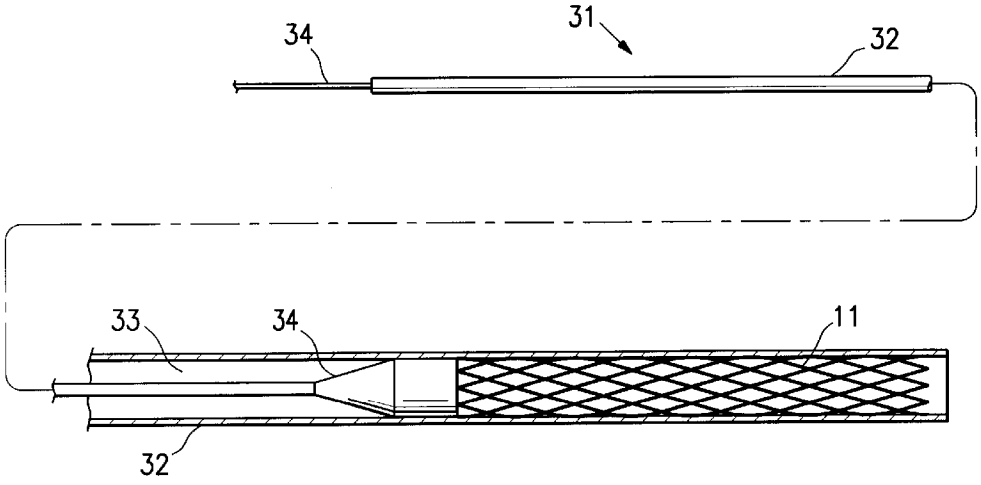

FIG. 12

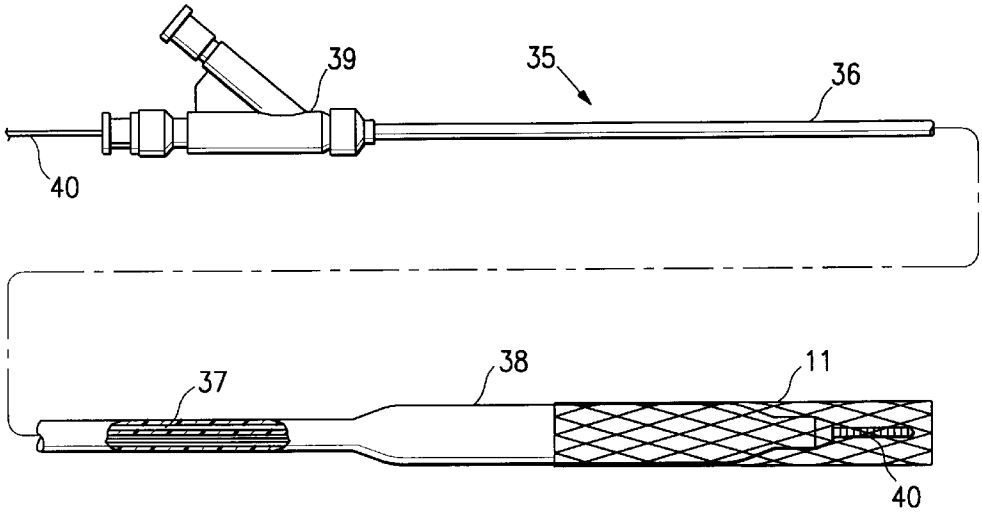

FIG. 13

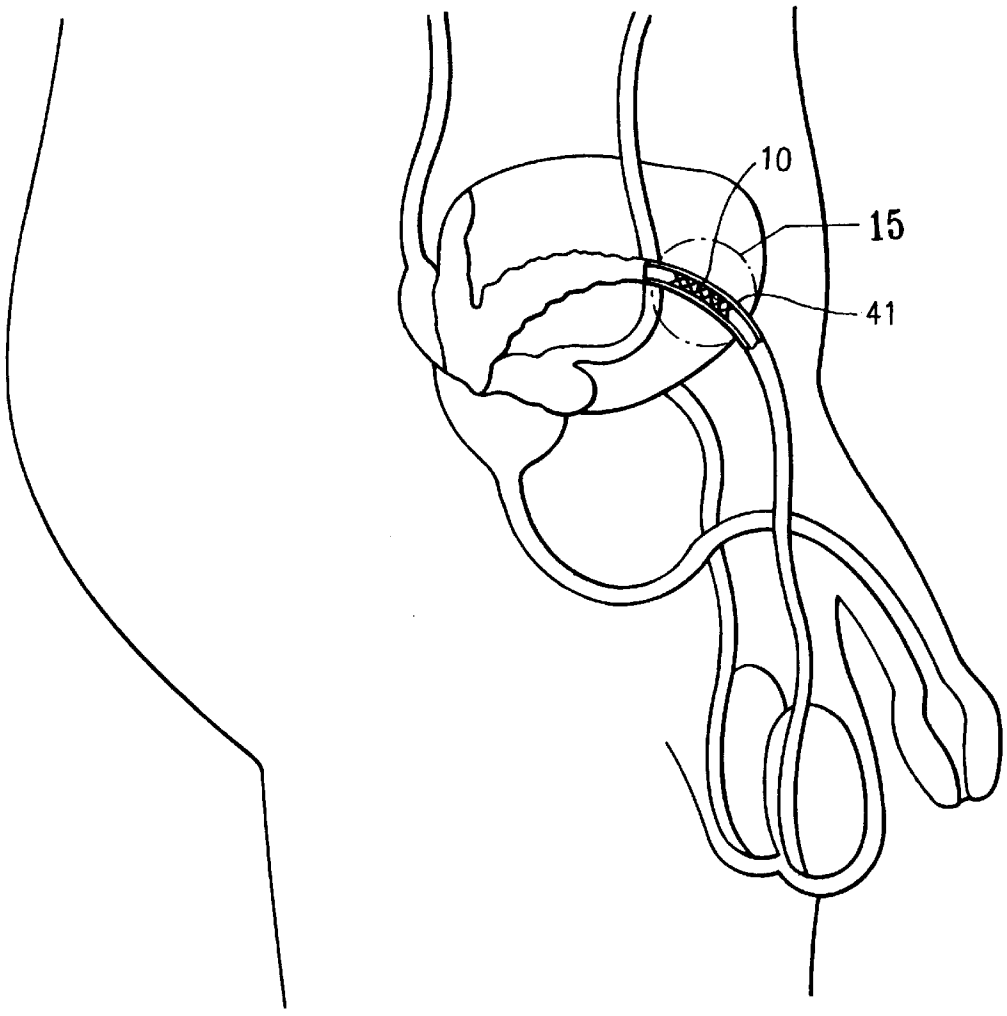

FIG. 14

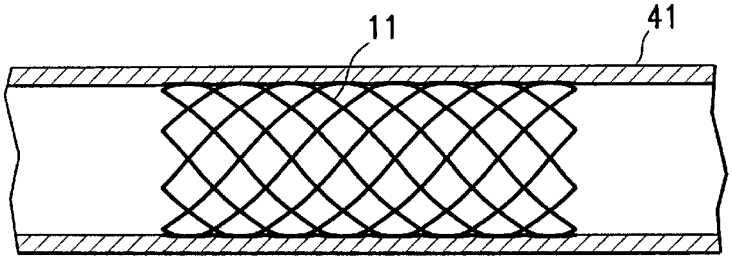

FIG. 15

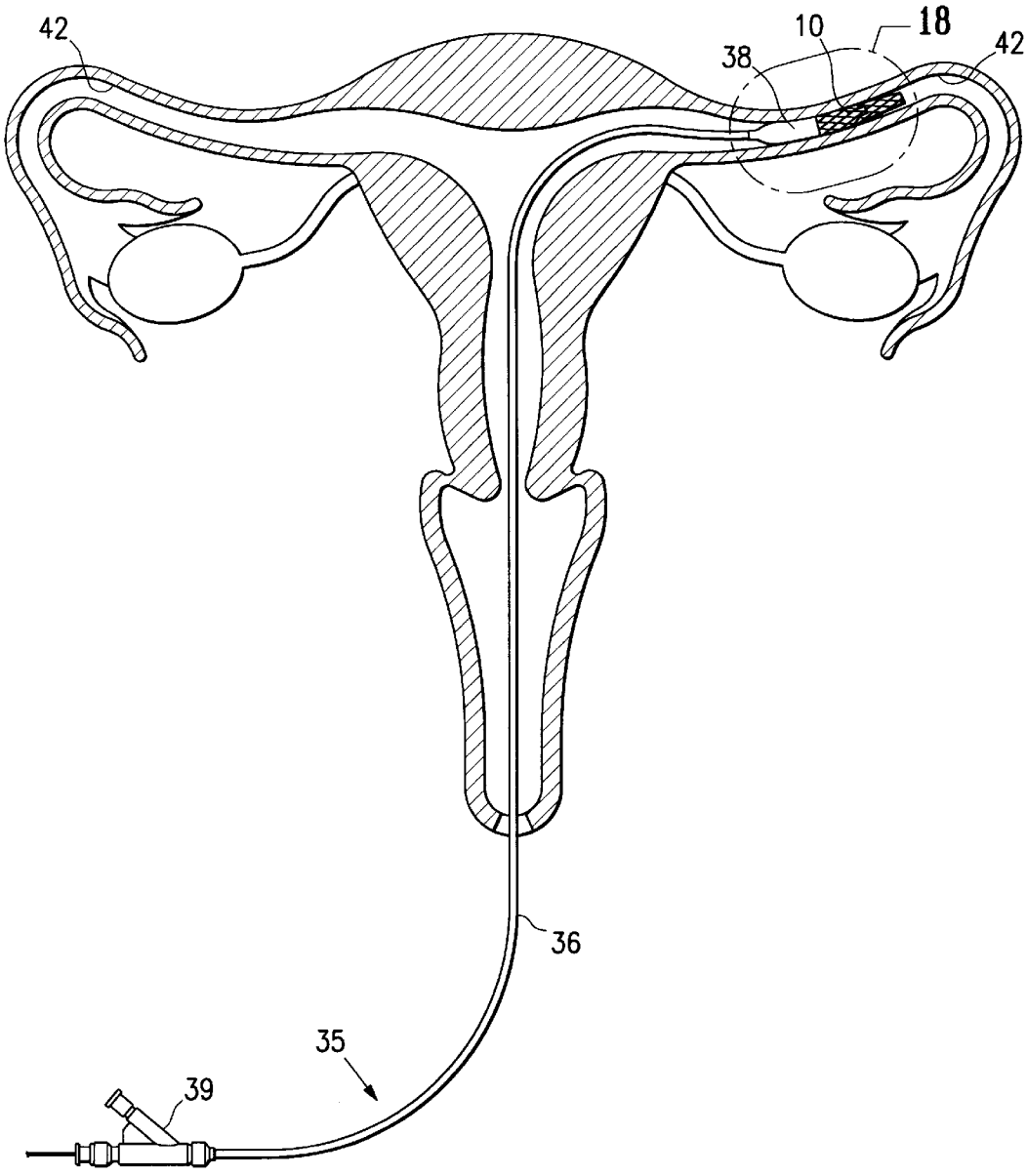

FIG. 16

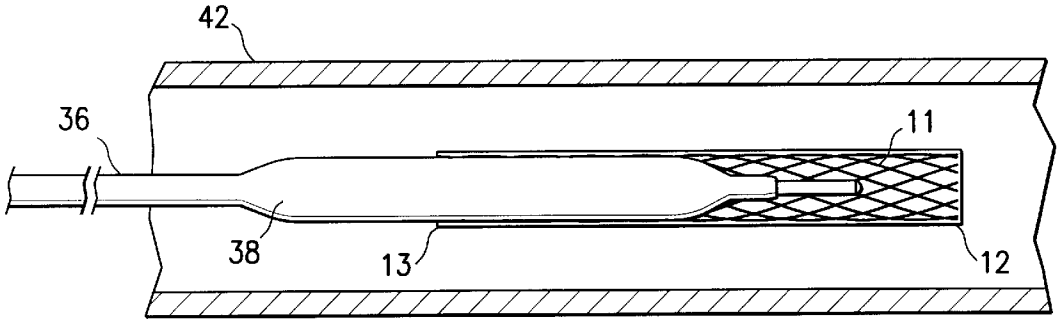

FIG. 17

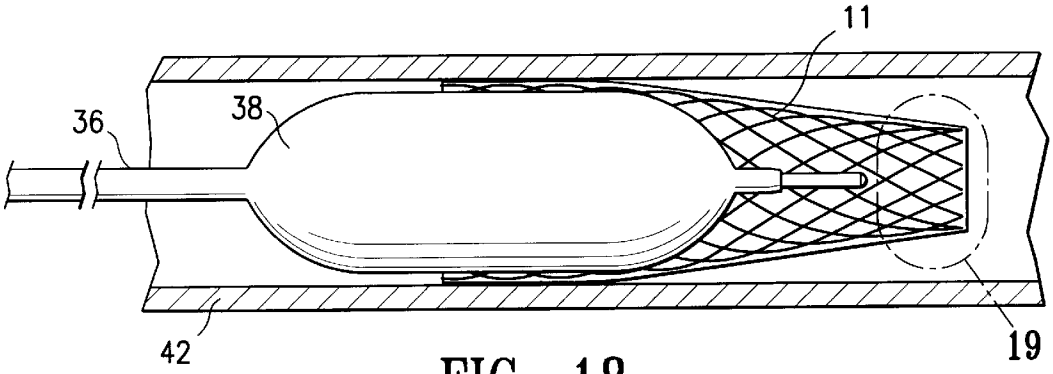

FIG. 18

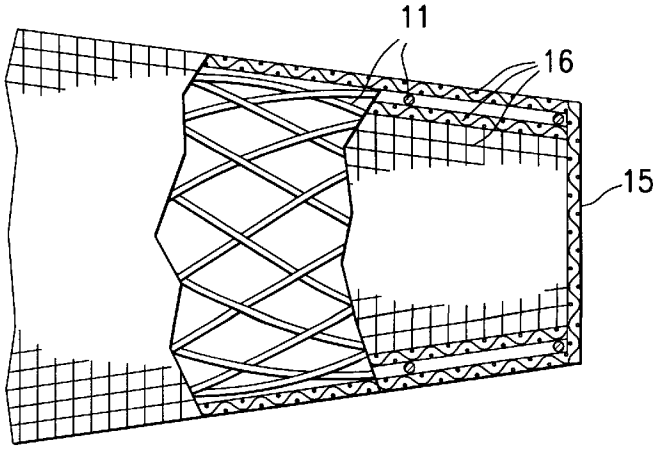

FIG. 19

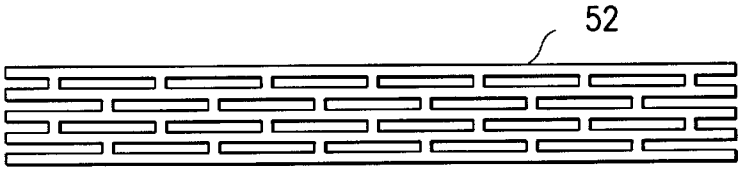

FIG. 20

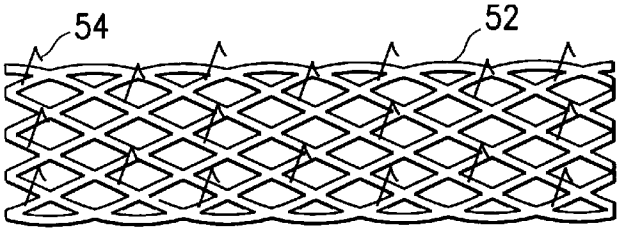

FIG. 21

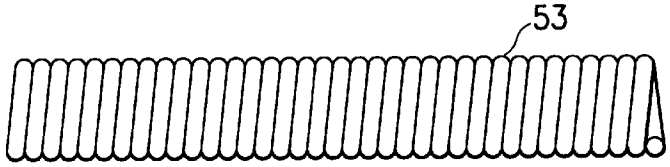

FIG. 22

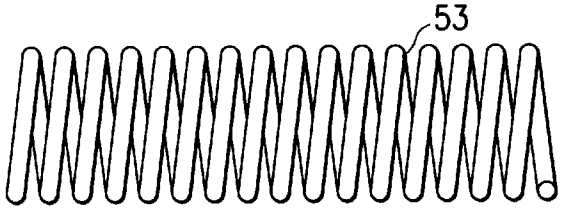

FIG. 23

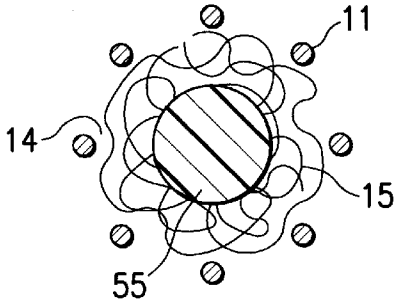

FIG. 24

OCCLUDING DEVICE AND METHOD OF USE

FIELD OF INVENTION

This invention relates to the field of occluding devices and the methods of using such devices, and more particularly to contraceptive and sterilization devices.

BACKGROUND OF THE INVENTION

Conventional contraceptive strategies generally fall within three categories: physical barriers, drugs and surgery. While each have certain advantages, they also suffer from various drawbacks. Barriers such as condoms and diaphragms are subject to failure due to breakage and displacement. Drug strategies, such as the pill and Norplant™, which rely on artificially controlling hormone levels, suffer from known and unknown side-effects from prolonged use. Finally, surgical procedures, such as tubal ligation and vasectomy, involve the costs and attendant risks of surgery, and are frequently not reversible. Thus, there remains a need for a safe, effective method of contraception, particularly a non-surgical method which is reversible.

SUMMARY OF THE INVENTION

This invention is directed to a device for occluding a body lumen, generally comprising a tubular member, and a mesh member transversely disposed on the tubular member which is permeable to allow for tissue ingrowth. The tissue ingrowth produces a tissue impregnated mesh which occludes the body lumen. A presently preferred embodiment is a contraceptive or sterilization device for occluding a reproductive tract or lumen to prevent the passage of reproductive cells through the tract or lumen. For example, the occluding device of the invention can be used in the fallopian tubes of a female patient, or the vas deferens of a male patient. However, the occluding device of the invention can be used in other body lumens or passageways. For example, the occluding device of the invention can be used to repair a cardiac malformation, known as a ventricular septal defect, in which a passageway is formed in the heart wall that separates the right and left ventricles of the heart allowing blood leakage between the two ventricles. Thus, the occluding device of the invention is secured to the heart wall defining the septal defect, and ingrowth of the myocardium into the device mesh member occludes the passageway to thereby repair the defect. Similarly, atrial septal defects or other passageways in the heart and elsewhere in the body may be occluded using the device of the invention.

In accordance with the invention, the tubular member has a first end, a second end, and a lumen extending therein. The mesh member extends transversely on the tubular member, so that cellular invasion through the mesh member occludes the tubular member lumen and, consequently, the body lumen in which it is installed. In a presently preferred embodiment, the mesh member is disposed within the lumen of the tubular member. However, the transversely disposed mesh member may be outside of the tubular member lumen, as for example, where the mesh member comprises an end cap having a peripheral edge connected to an end of the tubular member. The tissue impregnated mesh forms an occluding member with improved durability over synthetic occluders, which are more vulnerable to rupture or failure within the body due to their synthetic structures. Moreover, the occluding device is highly flexible which facilitates the introduction and retention of the device within the body lumen.

In a presently preferred embodiment, the mesh member comprises strands of a material woven or bundled into a permeable structure. However, other suitable permeable structures may be used, including a porous membranal structure which allows for tissue ingrowth. The mesh member is formed from a biocompatible material, such as a metal, polymeric material, and organics such as animal tissues, and is preferably reactive to tissue so as to promote the tissue ingrowth into the mesh member.

Preferably, the tubular member is at least in part expandable within the body lumen from a first configuration suitable for introduction into the body lumen to a second larger configuration to facilitate securing the expanded tubular member to at least a portion of a wall which defines the body lumen. In one presently preferred embodiment, the tubular member has an open or lattice-like framework which allows for the growth of tissue through the openings of the lattice-like framework, so as to interconnect the tubular member and the wall of the body lumen. The surface of the tubular member may be treated to promote the tissue ingrowth. The occluding device of the invention may be advanced to the desired location within the body lumen by a suitable delivery system, such as a delivery catheter or a conventional balloon catheter similar to those used for delivering stents, aortic grafts and various types of prosthesis. The device is introduced and positioned within the region of the body lumen to be occluded with the tubular member in the first configuration with small transverse dimensions. Once in place, the tubular member is then expanded to the second configuration with transverse dimensions roughly corresponding to or slightly larger than the body lumen, so that the tubular member can be secured to the wall defining the body lumen. The tubular member may be self expanding or expanded by mechanical devices or by inflation of the balloon of the balloon catheter. The tubular member will then remain in the open configuration implanted in the body lumen.

With the open, lattice-like framework of the tubular member expanded within the body lumen, tissue ingrowth, or epithelialization, through the open framework of the tubular member secures it to the wall defining the body lumen. At the same time, epithelialization through the mesh member occludes the body lumen. Sufficient epithelialization to secure the device to the body wall and occlude the body lumen may take one or more weeks. While the term "epithelialization" is used herein, it should be understood that, depending on the body lumen, tissues such as endothelium or myocardium may be impregnating the device. Additionally, scar tissue formation may take place as well. One presently preferred embodiment of the invention comprises a reversible contraceptive system which reversibly occludes the reproductive body lumen. The tissue impregnated mesh may be reopened by any number of suitable means. For example, the occluding member may be partially or completely cut away using an atherectomy type catheter or laser to create a lumen, and then compressed using a balloon dilatation catheter similar to an angioplasty procedure. Alternatively, a plug may be releasably secured to the mesh member, so that the plug may be detached from the tissue impregnated mesh member to reopen the lumen. Thus, the contraceptive device of the invention can be left in place to effectively block the passageway until the patient wishes to reverse the procedure.

The contraceptive or sterilization device of the invention provides effective sterilization or contraception for both males and females due to the tissue impregnated mesh member which occludes the reproductive body lumen and

which has excellent durability. The device remains in place within the reproductive body lumen, and the tissue impregnated mesh member resists degradation or tearing, to thereby decrease the risk of failure of the device. Moreover, the implantation of the device can be performed in a single office visit, using minimally invasive and easily used devices such as hysteroscopes, catheters, guidewires, guiding catheters and the like. These and other advantages of the invention will become more apparent from the following detailed description of the invention when taken in conjunction with the accompanying exemplary drawings.

BRIEF DESCRIPTION OF THE DRAWINGS

FIG. **1** is an elevational view of one embodiment of the occluding device of the invention with the tubular member in a contracted configuration.

FIG. **2** is a transverse cross sectional view of the device shown in FIG. **1**, taken along lines **2**—**2**.

FIG. **3** is an elevational view of the device of the invention shown in FIG. **1**, in an expanded configuration.

FIG. **4** is a transverse cross sectional view of the device shown in FIG. **3**, taken along lines **4**—**4**.

FIG. **5** is an elevational view of another embodiment of the occluding device of the invention having a mesh member comprising bundled strands intermittently spaced in a plurality of sections of the tubular member.

FIG. **6** is an elevational view of another embodiment of the occluding device of the invention having a mesh member comprising woven strands disposed at the first end of the tubular member.

FIG. **7** is a transverse view of the mesh member, shown in FIG. **6**, comprising woven strands.

FIG. **8** is a longitudinal cross sectional view of the device shown in FIG. **6**, epithelialized in a body lumen.

FIG. **9** is a transverse cross sectional view of the device shown in FIG. **8**, taken along lines **9**—**9**.

FIG. **10** illustrates another embodiment of the occluding device having a mesh layer on an outer surface of the tubular member, within a body lumen.

FIG. **11** illustrates the device shown in FIG. **10** in an expanded configuration.

FIG. **12** is an elevational view, partially in section, of a delivery catheter useful in a method of the invention with a self-expanding occluding device of the invention.

FIG. **13** is an elevational view, partially in section, of a balloon catheter useful in a method of the invention.

FIG. **14** illustrates the male reproductive anatomy, and a contraceptive device embodying features of the invention, within the vas deferens.

FIG. **15** is an enlarged view of the expanded contraceptive device shown in FIG. **14**.

FIG. **16** illustrates the female reproductive anatomy, and a contraceptive device embodying features of the invention, within a fallopian tube.

FIG. **17** illustrates the device on a balloon catheter within a reproductive tract or body lumen, with the tubular member in a contracted configuration.

FIG. **18** illustrates the device shown in FIG. **16** within circle **18**, with the device on a balloon catheter within the fallopian tube, with the tubular member in an expanded configuration.

FIG. **19** is an enlarged, partially in section view of the tubular member shown in FIG. **18** within circle **19**, illustrating the mesh member and mesh layer.

FIGS. **20** and **21** are elevational views of another embodiment of the tubular member comprising a slotted member, in closed and expanded configurations, respectively.

FIGS. **22** and **23** are elevational views of another embodiment of the tubular member comprising a coil, in closed and expanded configurations, respectively.

FIG. **24** is a transverse cross sectional view of another embodiment of the invention, having a plug releasably secured to the mesh member.

DETAILED DESCRIPTION OF THE INVENTION

FIG. **1** illustrates an occluding device **10** embodying features of the invention generally comprising a tubular member **11** having a first end **12**, a second end **13**, and a lumen **14** extending therein. As best shown in FIG. **2**, illustrating a transverse cross section of the tubular member shown in FIG. **1** taken along lines **2**—**2**, a mesh member **15** is transversely disposed on the tubular member. In a presently preferred embodiment, occluding device **10** comprises a contraceptive or sterilization device for occluding a reproductive body lumen.

In the embodiment illustrated in FIGS. **1** and **2**, the tubular member **11** is in its relatively small dimensioned configuration for introduction and advancement into the patient's body lumen. FIG. **3** illustrates the tubular member **11** shown in FIG. **1** in an open, relatively large dimension configuration. As illustrated in FIG. **4**, showing a transverse cross section of the tubular member shown in FIG. **3** taken along lines **4**—**4**, the mesh member **15** expands so that it extends across the expanded lumen **14** of the tubular member **11**. In this configuration the tubular member **11** has an open, lattice-type structure facilitating epithelialization which secures the occluding member to the wall defining the body lumen. Preferably, tubular member **11** can be deformed to an expanded diameter, preferably equal to or slightly larger than the dimensions of the body lumen within which the contraceptive device **10** is to be disposed. For disposition within a female patient's fallopian tubes the expanded transverse dimensions should be about 0.1 mm to about 5 mm.

The mesh member **15** is permeable to allow for tissue ingrowth. The permeability of the mesh member **15** facilitates epithelialization, and the epithelialized mesh occludes the reproductive body lumen sufficiently to prevent the passage of reproductive cells therethrough. In a presently preferred embodiment, the mesh member **15** comprises intertwined strands of a biocompatible material connected to the tubular member **11**. In the embodiment illustrated in FIG. **1**, the mesh member comprises bundled strands. In the embodiment illustrated in FIG. **6** the mesh member comprises woven strands. FIG. **7** is a transverse view of the device illustrated in FIG. **6**, illustrating the woven strands forming the mesh member. However, the mesh member **15** may comprise a variety of suitable permeable structures which support epithelialization, as for example, where the mesh member comprises the walls of the tubular member **11** connected together to form a closed end of the tubular member (not shown).

In the embodiment illustrated in FIG. **1**, the mesh member **15** extends along the length of the tubular member **11** from the first end **12** to the second end **13** thereof. In another embodiment, illustrated in FIG. **5**, the mesh member **15** is disposed in a plurality of sections intermittently spaced along the length of the tubular member. FIG. **6** illustrates another embodiment, in which the mesh member **15** is

disposed at the first end of the tubular member **11**. In the embodiment illustrated in FIG. **6**, the mesh member comprises a single sheet of woven material, disposed in the lumen of the tubular member **11**. Alternatively, a plurality of stacked woven mesh sheets may be provided, including sheets having different mesh sizes. In the embodiments illustrated in FIGS. **1**, **5** and **6**, the mesh member **15** is within the lumen **14** of the tubular member. The mesh member may be connected to the tubular member **11** by a variety of suitable means including adhesive, heat bonding, or solvent bonding.

The tubular member **11**, expanded within the body lumen to be occluded, epithelializes to secure the contraceptive device **10** within the body lumen, and tissue ingrowth in the mesh member **15** occludes the lumen of the tubular member and the body lumen. FIG. **8** illustrates the embodiment of the contraceptive device **10** shown in FIG. **6**, installed within the patient's body lumen **21**, with tissue ingrowth **22** within the walls of the tubular member **11** and within the mesh member **15**. FIG. **9** illustrates a transverse cross section of the installed device **10** shown in FIG. **8** taken along lines **9**—**9**.

A variety of materials may be used to form the mesh member **15**, including plastics, polymers, metals, and treated animal tissues. In a presently preferred embodiment, the mesh member **15** is an irritant, such as Dacron or Nylon, which promotes epithelialization. Additionally, the mesh member may be coated or otherwise impregnated with cell growth stimulators, hormones, and/or chemicals to enhance tissue impregnation. The fibers used to form the mesh member **15** are generally about 0.00025 mm to about 0.25 mm in diameter. It would be obvious that a wide variety of mesh sizes which support epithelialization may be used. For example, in one embodiment the mesh member 15 mesh size is about 5 μm to about 0.05 mm, and preferably about 10 μm to about 15 μm. Preferably, mesh members having relatively large mesh sizes are coated with the epithelialization promoter agents.

In one embodiment, illustrated in FIG. **10**, a mesh layer **16** is provided along at least a section of the outer surface and/or the inner surface of the tubular member, to facilitate tissue epithelialization along the tubular member **11** and into the mesh member **15**. In the embodiment illustrated in FIG. **10**, the mesh layer **16** is disposed along the entire length of the outer surface of the tubular member **11** and transversely disposed at the first end **12** of the tubular member. The mesh layer may be an integral extension of the mesh member **15**, or a separate member connected to or separate from the mesh member **15**. In a presently preferred embodiment, the mesh layer **16** comprises woven or bundled strands of a, preferably, biocompatible material, which may be a single or a plurality of mesh sheets, as discussed above in connection with the mesh member **15**. The mesh layer is permeable to allow for tissue ingrowth, and consequently, facilitates ingrowth within the mesh member **15**, as for example, in embodiments in which only a section of the tubular member is expanded into contact with a wall of the body lumen, as discussed below.

The tubular member **11** may be expanded in the body lumen using a balloon catheter, or alternatively, it may be self expanding. The tubular member is preferably self expanding in the embodiment in which the mesh member **15** is disposed along the length of the tubular member, as in the embodiment illustrated in FIG. **1**, or is disposed at least in part at the second end of the tubular member, as in the embodiment illustrated in FIG. **5**.

FIG. **12** illustrates a delivery catheter **31** useful in the delivery of the device **10** having self expanding tubular member. The delivery catheter **31** generally comprises an elongated shaft **32** having a lumen **33** extending therein. The self expanding tubular member **11** may be deformed into the smaller diameter configuration within the lumen **33** of the delivery catheter, and expanded into the larger diameter configuration within the body lumen by longitudinally displacing the tubular member out the distal end of the delivery catheter to thereby remove the radially compressive force of the delivery catheter. A pusher **34** slidably received within the lumen of the delivery catheter can be used to longitudinally displace the tubular member **11** out the distal end of the delivery catheter.

Similarly, in the embodiment illustrated in FIG. **6** in which the mesh member **15** is disposed primarily in the first end of the tubular member, the tubular member may be expanded using a balloon catheter inserted into the open second end of the tubular member. FIG. **13** illustrates a catheter **35** useful in the practice of the invention, which comprises an elongated shaft **36** having an inflation lumen **37** which is in fluid communication with inflatable member **38** mounted on a distal section of the catheter shaft, and adapter **39** on a proximal end of the catheter shaft. The tubular member **11** is mounted on the inflatable member **38**, and preferably closely conforms to the diameter of the uninflated inflatable member **38** to facilitate introduction into the desired body lumen The tubular member **11** may be deformed to facilitate mounting onto the inflatable member **38**, and is expanded by the inflatable member to an open expanded configuration within a body lumen. A guidewire **40** within the catheter lumen may extend through the mesh member **15**, provided the guidewire has a relatively small diameter compared with the mesh size. For example, a conventional guidewire having a diameter of about 0.018 inch or less inch may typically be extended through the mesh member **15** without adversely effecting the mesh member **15**.

FIG. **14** illustrates the male reproductive anatomy, including the vas deferens **41** in which the contraceptive device **10** of the invention may be installed. The expanded tubular member **11** within the vas deferens is illustrated in FIG. **15**. FIG. **16** illustrates the female reproductive anatomy, including the fallopian tubes **42** in which the contraceptive device **10** is installed. In FIG. **16**, the device **10** is shown mounted on the inflatable member **38** of the catheter **35** and positioned within the fallopian tube **42**.

The practice of the invention comprises the following general steps, with specific reference to the embodiment illustrated in FIG. **16** comprising a contraceptive device **10** for occluding fallopian tubes of a female patient. The contraceptive device **10** comprising a tubular member **11** having a relatively small transverse dimension is mounted onto the exterior of balloon **38** of catheter **35**, as shown in FIG. **17**, and the catheter **35** is advanced under fluoroscopic, hysteroscopic, or ultrasonic visualization until tubular member **11** is positioned within one of the female patient's fallopian tubes **42**. Inflation fluid is introduced through adapter **39** to inflate inflatable member **38**. As shown in FIG. **18**, inflation of balloon **38** expands tubular member **11** to an open configuration, lodging it in fallopian tube **42**. In the embodiment illustrated in FIG. **18**, a section of the tubular member **11** extending from the second end of the tubular member, is expanded into contact with the wall defining the fallopian tube **42**. In a presently preferred embodiment, at least about ⅓ of the tubular member is expanded into contact with the body lumen wall to securely attach the device **10** within the fallopian tube **42**. The inflatable member **38** is deflated, and the catheter **35** is removed, leaving the

expanded tubular member **11** implanted in body lumen **42**. Another contraceptive device **10** is delivered to the patient's other fallopian tube and expanded therein in the same manner. Similarly, the tubular member **11** may be expanded into position within the vas deferens **41** of a male patient to provide male contraception using the same procedures. Alternatively, the contraceptive device **10** may be self expanding as discussed above.

FIG. **19** illustrates an enlarged, partially in section, view of the first end of the tubular member **11** and mesh member **15** therein, shown in FIG. **18** within circle **19**. In the embodiment illustrated in FIG. **19**, the mesh layer **16** is on the inner and outer surface of the tubular member **11**. Over a period of a week or more epithelial cells lining the lumen will proliferate, growing around the open framework of tubular member **11** and within the mesh member **15**, as shown in FIGS. **8** and **9**, thereby securing the expanded tubular member **11** to the wall defining the fallopian tube **42**, and occluding the fallopian tube **42**. In the embodiment illustrated in FIGS. **8** and **9**, epithelial cells cover the inner and outer surfaces of the tubular member, so that the tubular member is secured to the fallopian tube as an embedded, integral member therein. The layer of epithelial tissue that forms within the lattice-like structure of the tubular member **11** and optional mesh layer **16** helps block and seal the lumen so as to prevent the passage of reproductive cells, eggs or sperm cells.

The tubular member may have a number of suitable configurations as shown in schematically in FIGS. **1**, **20**–**23**. In the embodiment illustrated in FIG. **1**, tubular member **11** comprises a braided tube of wire or ribbon. FIGS. **20** and **21** illustrate another embodiment in which tubular member **11** comprises a length of metal tubing **52**, such as hypodermic tubing, having slots. FIG. **20** illustrates tubular member **11** in its relatively small dimensioned configuration for introduction and advancement into the patient's body lumen, and FIG. **21** its larger, open configuration. The slots cut into the wall of the tubing allow expansion of the occluding member into the open configuration shown in FIG. **21**. Likewise, in FIGS. **22** and **23**, tubular member **11** is a coil **53** of wire or ribbon. It is obvious that a variety of other suitable configurations may be used for tubular member **11**, such as a number of closed sinusoidal rings of wire or ribbon.

In still other embodiments, mechanical, adhesive or other anchoring means may be employed to secure the expanded tubular member to the vessel wall defining the body lumen. For example, the means to secure a stent or prosthetic device to an aortic or arterial wall described in U.S. Pat. No. 4,140,126; U.S. Pat. No. 4,562,596; U.S. Pat. No. 4,577,631; U.S. Pat. No. 4,787,899; U.S. Pat. No. 5,104,399; U.S. Pat. No. 5,167,614; U.S. Pat. No. 5,275,622; U.S. Pat. No. 5,456,713; and U.S. Pat. No. 5,489,295 may be used with the present invention to interconnect the wall defining the reproductive tract and the tubular member. These patents are incorporated herein in their entireties by reference. For example, barbs or hooks **54**, as illustrated in FIG. **21**, may be provided on the tubular member **11**. The barbs or hooks become imbedded in the wall defining the body lumen as the tubular member is expanded. Such anchoring members are especially preferred for use in the fallopian tubes of a female patient, in order to prevent the peristaltic action therein from dislodging the device before the epithelialization of the tubular member **11**.

The tubular member **11** is formed from metals such as stainless steel, superelastic or shape memory material such as a nickel-titanium (NiTi) alloy such as NITINOL, platinum, tantalum, gold, or rigid or semirigid biocompatible plastics. In a presently preferred embodiment, the tubular member is a superelatic material, providing a controlled force on the body lumen during expansion of the tubular member. The surface of the tubular member's **11** framework may be designed to facilitate epithelial growth, as by providing the tubular member with an open or lattice-like framework to promote epithelial growth into as well as around the member to ensure secure attachment to, and embodiment within the wall of the body lumen. Suitable surface techniques include EDM machining, laser drilling, photo etching, sintering and the like. Additionally, increasing the surface area of the tubular member can also provide greater adhesion for the epithelial tissue. Suitable surface treatments include plasma etching, sand blasting, machining and other treatments to roughen the surface. In other embodiments, the device may be coated or seeded to spur epithelialization. For example, the device can be coated with a polymer having impregnated therein a drug, enzyme or protein for inducing or promoting epithelial tissue growth. In yet another refinement, at least part of the device, as for example the tubular member or the mesh layer, could be plated with or otherwise incorporate an inflammatory material to produce an inflammatory response in the tissue of the wall defining the body lumen, which further contributes to the obstruction of the lumen. For example, the mesh member or mesh layer may incorporate strands or particles of inflammatory material therein. In one embodiment the inflammatory material comprises copper or copper alloy. Other inflammatory materials, such as radioactive materials, may be suitable as well. For example, at least a part of the device, as for example the tubular member, could be radioactive, emitting alpha, beta or gamma particles.

The occlusion of the lumen may be reversed simply by removing the tissue impregnated mesh, as by cutting away using conventional atherectomy devices or lasers. Additionally, a balloon catheter can be used to compress the occluding tissue ingrowth to open up the passageway. For example, if a passageway larger than the passageway cut into the tissue impregnated mesh is desired, a balloon catheter can be advanced within the body lumen until the balloon is within the lumen left by the cutting of the tissue impregnated mesh and then the balloon on a catheter is inflated to widen the opening. In an alternative embodiment illustrated in FIG. **24**, the device **10** further includes a plug **55** releasably secured to the mesh member **15**. The plug **55** is secured to the mesh member, as by fusion bonding, biocompatible adhesive, or mechanical connectors, so that the plug may be removed from the implanted device in order to reverse the occlusion of the body lumen by opening up a lumen in the mesh member. A variety of suitable materials may be used to form the plug, including metals and plastics. The plug may be coated or seeded to spur epithelization, or be formed at least in part of an inflammatory material to produce an inflammatory response as discussed above. The plug extends along at least the length of the mesh member, and preferably extends beyond an end of the mesh member.

Various modifications and improvements may be made to the present invention without departing from the scope thereof. For example, while the invention has been discussed primarily in terms of occluding a reproductive body lumen, the device **10** may be used to occlude a variety of body lumens or passageways. A mechanical expandable member such as described in U. S. Pat. No. 4,585,000, which is incorporated herein by reference, may be used to expand the tubular member within the reproductive tract to engage the wall thereof. Moreover, although individual features of embodiments of the invention may be shown in some of the

drawings and not in others, those skilled in the art will recognize that individual features of one embodiment of the invention can be combined with any or all the features of one or more of the other embodiments.

What is claimed is:

1. A device for occluding a body lumen or passageway, comprising:

a) a tubular member having a first end, a second end, and a lumen extending therein, which is at least in part expandable within the body lumen from a first configuration to a second larger configuration; and

b) a mesh member transversely disposed on the tubular member, which is permeable to allow for tissue ingrowth to thereby occlude the body lumen.

2. The device of claim **1** wherein the mesh member comprises woven strands of a biocompatible material connected to the tubular member.

3. The device of claim **1** wherein the mesh member comprises bundled strands of a biocompatible material connected to the tubular member.

4. The device of claim **1** wherein the mesh member is formed from a material selected from the group consisting of nylon, dacron, metal, polymeric material, and animal tissue.

5. The device of claim **1** further including a mesh layer longitudinally disposed along at least a section of at least one of an inner and an outer surface of the tubular member.

6. The device of claim **5** wherein the mesh layer is longitudinally disposed along substantially the entire length of at least one of the inner and the outer surface of the tubular member.

7. The device of claim **1** wherein the mesh member is disposed within the lumen of the tubular member along substantially the entire length of the tubular member.

8. The device of claim **1** wherein the mesh member is disposed within the lumen of the tubular member in a plurality of sections intermittently spaced along the length of the tubular member.

9. The device of claim **1** wherein the mesh member is disposed within the lumen of the tubular member at the first end of the tubular member.

10. The device of claim **9** including a mesh layer longitudinally disposed along at least a section of at least one of an inner and outer surface of the tubular member.

11. The device of claim **1** wherein the tubular member comprises a material selected from the group consisting of stainless steel, superelastic material, shape memory material, rigid plastics, semirigid plastics, metal, NiTi, tantalum, platinum, and gold.

12. The device of claim **1** wherein the tubular member further includes anchoring members configured to secure the expanded tubular member to a wall defining the body lumen.

13. The device of claim **1** wherein the tubular member expands from the first configuration to the second larger configuration by the release of a radially compressive force.

14. The device of claim **13** wherein the tubular member comprises a superelastic material.

15. The device of claim **9** wherein the tubular member second larger configuration comprises a radially expanded diameter increasing along at least a section thereof from the first end of the tubular member to the second end of the tubular member.

16. The device of claim **1** wherein the tubular member comprises a lattice-like framework.

17. The device of claim **16** wherein the lattice-like framework comprises a thin walled metallic tube having a pattern of cuts configured to allow the tubular member to be expanded to the large diameter configuration.

18. The device of claim **16** wherein the lattice-like framework comprises a braid of wire.

19. The device of claim **16** wherein the lattice-like framework comprises a helical coil of wire.

20. The device of claim **1** wherein the surface of the tubular member is configured to promote epithelialization.

21. The device of claim **1** coated at least in part with a compound to promote tissue cell growth.

22. The device of claim **1** further comprising a material capable of provoking an inflammatory response.

23. The device of claim **22** wherein the inflammatory material comprises copper or copper alloy.

24. The device of claim **22** wherein the inflammatory material comprises a radioactive material.

25. The device of claim **1** wherein the tubular member has an openwall structure to facilitate the ingrowth of tissue cells thereby securing at least a section of the expanded portion of the tubular member to a wall portion of the body lumen.

26. The device of claim **1** further including a plug releasably secured to the mesh member.

27. The device of claim **26** wherein the plug is formed at least in part of a material capable of provoking an inflammatory response.

28. A contraceptive or sterilization device for occluding a reproductive body lumen to prevent the passage of reproductive cells therethrough, comprising:

a) a tubular member having a first end, a second end, and a lumen extending therein, which is at least in part expandable within the reproductive body lumen from a first configuration to a second larger configuration; and

b) a mesh member connected to the tubular member, which is permeable to allow for tissue ingrowth to thereby occlude the reproductive body lumen.

29. A contraceptive device installed within a lumen of the patient's reproductive system, comprising

a) a tubular member having a first end, a second end, and a lumen extending therein, and having at least a portion thereof which is secured to a body wall portion defining at least in part the lumen of the patient's reproductive system; and

b) an occluding member connected to the tubular member comprising an epithelialized mesh which occludes the lumen of the patient's reproductive system sufficiently to prevent the passage of reproductive cells therethrough.

30. The installed contraceptive device of the claim **29** wherein the tubular member is epithelialized along at least a length thereof.

31. A contraceptive system, comprising

a) a catheter having a proximal end, a distal end, and a lumen extending at least in part therein; and

b) a contraceptive device releasably connected to the catheter, having a tubular member having a first end, a second end, and a lumen extending therein, which is at least in part expandable within the reproductive body lumen from a first configuration to a second larger configuration, and having a mesh member connected to the tubular member, which is permeable to allow for tissue ingrowth to thereby occlude the reproductive body lumen.

32. The contraceptive system of claim **31** including an expanding member on a distal section of the catheter to expand at least a portion of the tubular member.

33. A method of contraception comprising the steps of:

a) inserting within a desired body lumen a contraceptive device comprising a tubular member and a mesh member connected thereto;

b) expanding the tubular member within the body lumen;

c) securing the expanded tubular member to a wall portion defining at least in part the body lumen; and

d) epithelializing the mesh member to occlude the body lumen.

34. The method of claim **33** wherein the step of securing the tubular member to the wall portion comprises epithelializing the tubular member within the body lumen.

35. The method of claim **34** wherein the contraceptive device further includes one or more connecting members on a surface of the tubular member, and wherein the step of securing the tubular member to the wall portion further comprises embedding the connecting members in the wall portion.

36. The method of claim **33** wherein the contraceptive device is disposed on an expandable member of a delivery catheter, and wherein the step of expanding the tubular member comprises inflating the expandable member.

37. The method of claim **36** wherein the mesh member of the contraceptive device is transversely disposed within a lumen of the tubular member at a first end of the tubular member, and a distal end of the expandable member of the catheter is disposed in the tubular member lumen proximal to the mesh member, and the step of inflating the expandable member expands the tubular member to a larger diameter increasing along at least a section of the tubular member from a second end to the first end of the tubular member.

38. The method of claim **37** wherein at least the second end of the tubular member is expanded into contact with the wall portion of the body lumen.

39. The method of claim **38** further including the step of deflating the expandable member and withdrawing the delivery catheter from the body lumen.

40. The method of claim **33** wherein the step of expanding the tubular member comprises the step of releasing a radially compressive force on the tubular member.

41. The method of claim **40** wherein the contraceptive device is disposed within a lumen of a delivery catheter, and the step of releasing the radially compressive force comprises longitudinally displacing the tubular member out a distal end of the delivery catheter.

42. The method of claim **33** wherein the expanded tubular member is disposed within the body lumen for sufficient time for it to be epithelialized within the body lumen and thereby secured to the wall portion.

* * * * *