Filed: February 7, 2022

On behalf of **Edwards Lifesciences Corporation and Edwards Lifesciences LLC**
By: Craig S. Summers
Joshua J. Stowell
Brian C. Barnes
KNOBBE, MARTENS, OLSON & BEAR, LLP
2040 Main Street, 14th Floor
Irvine, CA 92614
Tel.: (949) 760-0404
Fax: (949) 760-9502
Email: BoxEdwards21-5@knobbe.com

UNITED STATES PATENT AND TRADEMARK OFFICE

BEFORE THE PATENT TRIAL AND APPEAL BOARD

EDWARDS LIFESCIENCES CORPORATION AND EDWARDS LIFESCIENCES LLC
Petitioners,

v.

AORTIC INNOVATIONS, LLC
Patent Owner.

IPR2022-00556
Patent No. 10,987,236

PETITION FOR *INTER PARTES* REVIEW OF U.S. PATENT NO. 10,987,236

TABLE OF CONTENTS

Page No.

I. SUMMARY OF THE ARGUMENT 1

II. ANATOMY AND BACKGROUND 10

III. STATE OF THE ART 13

IV. THE ’236 PATENT 24

A. Overview 24

B. Prosecution History 26

C. The Critical Date 26

V. STATEMENT AND RELIEF REQUESTED 27

A. IPR Grounds 27

B. The Asserted References Are Prior Art 27

C. The Asserted References Are Analogous Art 28

VI. LEVEL OF ORDINARY SKILL 28

VII. CLAIM CONSTRUCTION 29

VIII. PROPOSED GROUNDS FOR UNPATENTABILITY 30

A. Ground 1: Claims 1-4 Obvious Over Cribier and Walther 30

1. Claim 1 31

a. Preamble 31

b. Outer Frame 32

c. Inner Frame 32

d. Stitching 35

TABLE OF CONTENTS
(*cont'd*)

Page No.

e. First Portion of Fibers 36

f. Second Portion of Fibers 43

g. First and Second Portions in Overlapping Radial Alignment 45

h. First Sealing Interface in Overlapping Radial Alignment with Leaflets 46

i. Free of an Outer Graft Covering 47

j. Radially Compressed and Expanded Orientation 49

k. Balloon Expandable 50

l. Compress Fibers to Form a Sealing Interface 50

2. Claim 2 51

3. Claim 3 52

4. Claim 4 55

B. Grounds 2-3: Claims 1-4 Obvious Over Spenser and Walther or Spenser II 56

1. Claim 1 58

a. Preamble 59

b. Outer Frame 59

c. Inner Frame 60

d. Stitching 62

TABLE OF CONTENTS
(*cont'd*)

Page No.

e. First Portion of Fibers 63

i. Walther 63

ii. Spenser II 67

f. Second Portion of Fibers 70

i. Walther 70

ii. Spenser II 71

g. First and Second Portions in Overlapping Radial Alignment 73

i. Walther 73

ii. Spenser II 73

h. First Sealing Interface in Overlapping Radial Alignment with Leaflets 73

i. Free of an Outer Graft Covering 74

i. Walther 74

ii. Spenser II 75

j. Radially Compressed and Expanded Orientation 76

k. Balloon Expandable 76

l. Compress Fibers to Form a Sealing Interface 77

i. Walther 77

ii. Spenser II 78

TABLE OF CONTENTS
(*cont'd*)

Page No.

2. Claim 2 78

3. Claim 3 80

a. Walther 80

b. Spenser II 81

4. Claim 4 82

i. Walther 82

ii. Spenser II 82

C. Grounds 4-7: Claims 1-4 Anticipated or Obvious in View Levi Alone or With Walther or Spenser II 83

1. Claim 1 84

a. Preamble 84

b. Outer Frame 84

c. Inner Frame 85

d. Stitching 87

e. First Portion of Fibers 88

i. Levi 88

ii. Walther or Spenser II 90

f. Second Portion of Fibers 93

i. Levi 93

ii. Walther or Spenser II 95

TABLE OF CONTENTS
(*cont'd*)

Page No.

g. First and Second Portions in Overlapping Radial Alignment 96

h. First Sealing Interface in Overlapping Radial Alignment with Leaflets 97

i. Free of an Outer Graft Covering 97

j. Radially Compressed Expanded Orientation 99

k. Balloon Expandable 99

l. Compress Fibers to Form a Sealing Interface 100

2. Claim 2 101

3. Claim 3 102

4. Claim 4 103

IX. SECONDARY CONSIDERATIONS 104

X. THE BOARD SHOULD NOT DENY INSTITUTION UNDER 35 U.S.C. §325(d) 104

XI. MANDATORY NOTICES UNDER 37 C.F.R. §42.8(a)(1) 108

A. Real Party-In-Interest (37 C.F.R. §42.8(b)(1)) 108

B. Related Matters (37 C.F.R. §42.8(b)(2)) 108

C. Lead and Backup Counsel (37 C.F.R. §42.8(b)(3)) 110

D. Service Information Under 37 C.F.R. §42.8(b)(4) 110

XII. FEES 110

TABLE OF CONTENTS
(*cont'd*)

Page No.

XIII. GROUNDS FOR STANDING UNDER 37 C.F.R. §42.104 111

XIV. CONCLUSION..... 111

Aortic Innovations, LLC, Exhibit 2129
Page 2129 - 7
IPR2023-01151, Edwards Lifesciences Corp. et al v. Aortic Innovations, LLC

TABLE OF AUTHORITIES

Page No(s).

Comcast Cable Commc'ns LLC v. Promptu Sys. Corp.,
IPR2018-00342, Paper 13 (PTAB July 19, 2018) 108

E.I. du Pont de Nemours & Co. v. Phillips Petroleum Co.,
849 F.2d 1430 (Fed. Cir. 2013) 54, 105, 107

KSR Int'l Co. v. Teleflex, Inc.,
550 U.S. 398 (2007) 42, 64, 70, 91

New Railhead Mfg., L.L.C. v. Vermeer Mfg. Co.,
298 F.3d 1290 (Fed. Cir. 2002) 26

In re Nilssen,
851 F.2d 1401 (Fed. Cir. 1988) 28

Phillips v. AWH Corp.,
415 F.3d 1303 (Fed. Cir. 2005) 29

Smith & Nephew,
721 F.3dat 1380-81 107

Smith & Nephew, Inc. v. Rea,
721 F.3d 1371 (Fed. Cir. 2013) 54, 105

TorPharm, Inc. v. Ranbaxy Pharms., Inc.,
336 F.3d 1322 (Fed. Cir. 2003) 54, 105, 107

Unwired Planet, LLC v. Google Inc.,
841 F.3d 995 (Fed. Cir. 2016) 28

OTHER AUTHORITIES

35 U.S.C. § 102 27

35 U.S.C. § 103 27

TABLE OF AUTHORITIES
(*cont'd*)

Page No(s).

35 U.S.C. §325 ..... 104, 108

37 C.F.R. §42.100 29

37 C.F.R. §42.104 110

Aortic Innovations, LLC, Exhibit 2129
Page 2129 - 9
IPR2023-01151, Edwards Lifesciences Corp. et al v. Aortic Innovations, LLC

TABLE OF EXHIBITS

Exhibit No.	Description
1001	U.S. Patent No. 10,792,172 B2 ("**'236 patent**")
1002	Excerpts from the prosecution history of the '236 patent
1003	Declaration of Nigel P. Buller, M.D.
1004	Curriculum Vitae of Nigel P. Buller, M.D.
1005	U.S. Provisional Application No. 61/567,458
1006	U.S. Provisional Application No. 61/723,446
1007	Walther, Thomas, et al., *Trans-catheter valve-in-valve implantation: in vitro hydrodynamic performance of SAPIEN + cloth trans-catheter heart valve in the Carpentier-Edwards Perimount valves,* 40 Euro. J. of Cardio-thoracic Surgery 1120-1126 (April 2011) ("**Walther**")
1008	U.S. Patent No. 9,393,110 B2 to Levi et al. ("**Levi**")
1009	Conradi, Lenard, et al., *Transcatheter aortic and mitral valve interventions: update 2010,* 2(4) Interventional Cardiology 513-523 (2010)
1010	U.S. Patent No. 7,510,575 B2 to Spenser et al. ("**Spenser**")
1011	WO 2006/005015 A2 to Spenser et al. ("**Spenser II**")
1012	Cribier, Alain, et al., *Technique of Transcatheter Aortic Valve Implantation with the Edwards-Sapien Heart Valve Using the Transfemoral Approach,* Herz, 34:347-56 (2009) ("**Cribier**")
1013	U.S. Patent No. 3,365,728 to Edwards et al.
1014	U.S. Patent No. 5,411,552 to Andersen et al.

Aortic Innovations, LLC, Exhibit 2129
Page 2129 - 10
IPR2023-01151, Edwards Lifesciences Corp. et al v. Aortic Innovations, LLC

Exhibit No.	Description
1015	U.S. Patent Pub. No. 2003/0153974 A1 to Spenser et al.
1016	Alkashkari, MD, et al., *Percutaneous Pulmonary Valve Implantation for RVOT Defects*, Cardiac Interventions Today, 21-29 (September/October 2010) ("Alkashkari")
1017	Cheung, Anson, et al., *Transapical Transcatheter Mitral Valve-in-Valve Implantation in a Human,* Annals of Thoracic Surgery, 87:e 18-20 (2009).
1018	PCT Publication No. WO 98/29057 to Letac et al.
1019	U.S. Patent No. 6,893,460 B2 to Spenser et al.
1020	Yuksel, Uygar, *Balloon-Expandable Transcatheter Aortic Valve Implantation,* Cardiac Interventions Today (Aug./Sept. 2009)
1021	Walther, Thomas, et al., *Transapical Minimally Invasive Aortic Valve Implantation,* 116 [suppl I] Circulation I-240—I-245 (September 11, 2007) ("Walther II")
1022	Smith, Craig R., et al., *Transcatheter versus Surgical Aortic-Valve Replacement in High-Risk Patients,* 364 N. Engl. J. Med. 23, 2187-2198 (June 9, 2011)
1023	Webb, John G. and Binder, Ronald K., *Transcatheter aortic valve implantation: The evolution of prostheses, delivery systems and approaches,* Archives of Cardiovascular Disease 105, 153-159 (March 16, 2012)
1024	Zajarias, Alan and Cribier, Alain G., *Outcomes and Safety of Percutaneous Aortic Valve Replacement,* 53 J. Am. College of Cardiology 20, 1829-1836 (May 19, 2009) ("Zajarias")
1025	Cribier, Alain, et al., *Percutaneous Transcatheter Implantation of an Aortic Valve Prosthesis for Calcific Aortic Stenosis,* 1006 Circulation 3006-3008 (December 10, 2002)

Exhibit No.	Description
1026	U.S. Patent No. 7,393,360 B2 to Spenser et al. ("Spenser Parent")
1027	Roselli, E.E., *Engineering transcatheter aortic valve devices: a surgeon's perspective*, 225 J. Engineering in Medicine, 207-219 (Mar. 1, 2011) ("Roselli")
1028	Tyagi, G.K., *Yarn structure and properties from different spinning techniques*, ("Tyagi")
1029	Kothari, V K, *Hairiness properties of polyester-cotton blended yarns*, 29 Indian J. of Fibre & Textile Research 30-34 (Mar. 2004) ("Kothari")
1030	Cribier, Alain, et al., *Early Experience with Percutaneous Transcatheter Implantation of Heart Valve Prosthesis for the Treatment of End-Stage Inoperable Patients with Calcific Aortic Stenosis*, 43 J. of the Am. College of Cardiology 4, 698-703 (February 18, 2004)
1031	Akin, Jodi and Sharma, Pooja, "Chapter 8: The Edwards SAPIEN Transcatheter Aortic Heart Valve System," *Transcatheter Aortic Valve Implantation*, edited by Patrick W. Serruys, et al., CRC Press, 2010, 102-114.
1032	Press Release: Edwards Lifesciences Receives FDA Approval for First Catheter-Based Aortic Heart Valve in the U.S. (November 2, 2011)
1033	Press Release: FDA Approves Expanded Indication for Edwards Lifesciences' Transcatheter Valve (October 19, 2012)
1034	Andersen, Henning, et al., *Transluminal implantation of artificial heart valves. Description of a new expandable aortic valve and initial results with implantation by catheter technique in closed chest pigs*, European Heart Journal, 13:704-08 (1992)

Exhibit No.	Description
1035	U.S. Patent No. 5,957,949 to Leonhardt et al.
1036	Nietlispach, Fabian, et al., *Current Balloon-Expandable Transcatheter Heart Valve and Delivery Systems,* Catheterization and Cardiovascular Interventions, 75:295-300 (2010)
1037	U.S. Patent Application Publication No. US 2009/0281619 A1 to Le et al.
1038	Press Release: Edwards Lifesciences Receives CE Mark for Edwards SAPIEN Transcatheter Heart Valve (Sept. 5, 2007)
1039	Amendment with RCE for Patent Application No. 17/213,251 filed July 27, 2021
1040	SAPIEN Instructions For Use
1041	Saia, Francesco, et al., *In-hospital and thirty-day outcomes of the SAPIEN 3 Ultra balloon-expandable transcatheter aortic valve: the S3U registry,* EuroIntervention 15:1240-1247 (2020)
1042	Press Release: Edwards SAPIEN XT Transcatheter Valve and Delivery Systems Receive CE Mark (March 2, 2010)
1043	Kainuma, Satoshi, et al., *Transcatheter aortic valve implantation: first trans-iliac experience in Japan,* General Thoracic Cardiovascular Surgery 59:273-276 (2011)
1044	Craido, Frank, *Iliac Arterial Conduits for Endovascular Access: Technical Considerations,* J. Endovasc. Ther. 14:347-351 (2007)
1045	U.S. Patent No. 7,585,321 B2 to Cribier et al. ("Cribier '321")
1046	Preliminary Amendment for Patent Application No. 17/096,253 filed November 30, 2020

Exhibit No.	Description
1047	Piazza, Nicolo, et al., *Anatomy of the Aortic Valvar Complex and Its Implications for Transcatheter Implantation of the Aortic Valve*, Cir Cardiovascular Intervention 1:74-81 (2008).
1048	WO 2011/051043 A1 to Essinger et al.
1049	Excerpts from the prosecution history of U.S. Patent No. 10,792,172
1050	Complaint from *Edwards Lifesciences Corp. v. Aortic Innovations, LLC,* IPR2021-01584 (Filed Sept. 28, 2021)
1051	U.S. Patent No. 6,730,118 B2 to Spenser et al.
1052	PCT Publication No. WO 2006/124649 A3 to Nguyen et al.
1053	U.S. Patent Pub. No. 2002/0052649 A1 to Greenhalgh
1054	U.S. Patent Pub. No. 2011/0098802 to Braido et al.
1055	Excerpts from the prosecution history of U.S. Patent No. 10,857,011
1056	Excerpts from the prosecution history of U.S. Patent No. 10,881,538
1057	U.S. Patent No. 7, 524,331 B2 to Birdsall ("Birdsall")
1058	Reserved
1059	Declaration of Sylvia D. Hall-Ellis PhD

Exhibit No.	Description
1060	Walther, Thomas, et al., *Trans-catheter valve-in-valve implantation: in vitro hydrodynamic performance of SAPIEN + cloth trans-catheter heart valve in the Carpentier-Edwards Perimount valves*, 40 Euro. J. of Cardio-thoracic Surgery 1120-1126 (November 2011), obtained from the University of California Los Angeles Library
1061	European Journal of Cardio-thoracic Surgery MARC Record from the OCLC Database
1062	Library of Congress subject heading sh85059711
1063	Library of Congress subject heading sh85099890
1064	Library of Congress subject heading sh85023143
1065	Azadani, Ali N., *Transcatheter Heart Valves for Failing Bioprostheses: State-of-the-Art Review of Valve-in-Valve Implantation*, Cir Cardiovascular Intervention 4:621-628 (2011).
1066	Cribier, Alain, et al., *Technique of Transcatheter Aortic Valve Implantation with the Edwards-Sapien Heart Valve Using the Transfemoral Approach*, Herz, 34:347-56 (2009), obtained from the British Library
1067	Herz MARC Record from the British Library
1068	Library of Congress subject heading sh2009118412
1069	Herz MARC Record from the OCLC Database
1070	Curriculum Vitae of Sylvia D. Hall-Ellis PhD

Petitioners Edwards Lifesciences Corp. and Edwards Lifesciences LLC ("Petitioner") request *inter partes* review ("IPR") of claims 1-4 ("the challenged claims") of U.S. Patent No. 10,987,236 ("the '236 patent"), purportedly assigned to Aortic Innovations, LLC ("Patent Owner").

I. SUMMARY OF THE ARGUMENT

The '236 patent describes endograft devices for repairing aortic aneurysms and replacing defective aortic heart valves. The majority of the embodiments comprise multi-component structures extending into the patient's ascending aorta and aortic arch.[1]

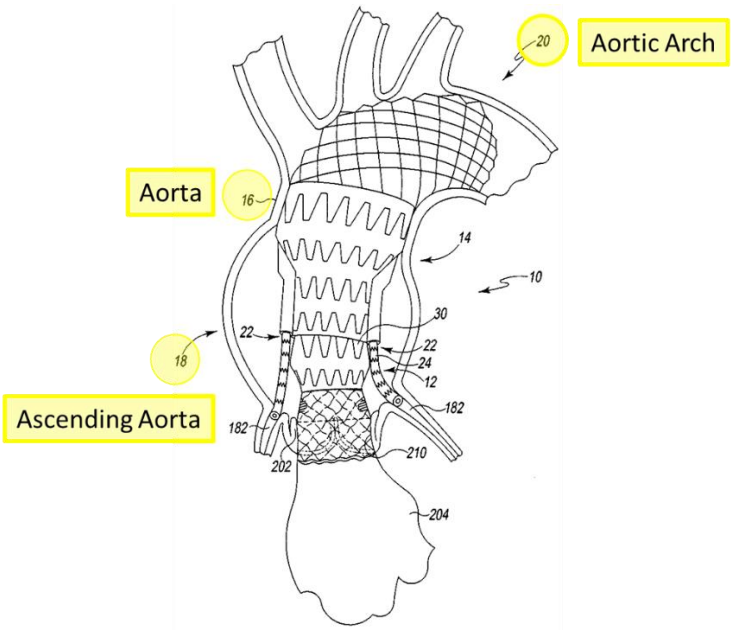

Fig. 2

[1] Color and labels added to figures unless otherwise noted.

The challenged claims, however, describe only the heart-valve component. Petitioner recently filed IPR Petitions against Patent Owner's U.S. Patent Nos. 10,792,172, 10,857,011, 10,966,846, 10,881,538, and 11,129,735 ("IPR Patents"). The '236 patent shares a common specification with the IPR patents. Like the IPR patents, the '236 patent claims a valve assembly having four principal elements: (1) a metallic outer frame [red], (2) an inner frame that includes a polymeric graft covering [blue], (3) stitches securing the inner frame to the outer frame [orange], and (4) non-metallic fibers positioned radially outwardly of the outer frame [green].

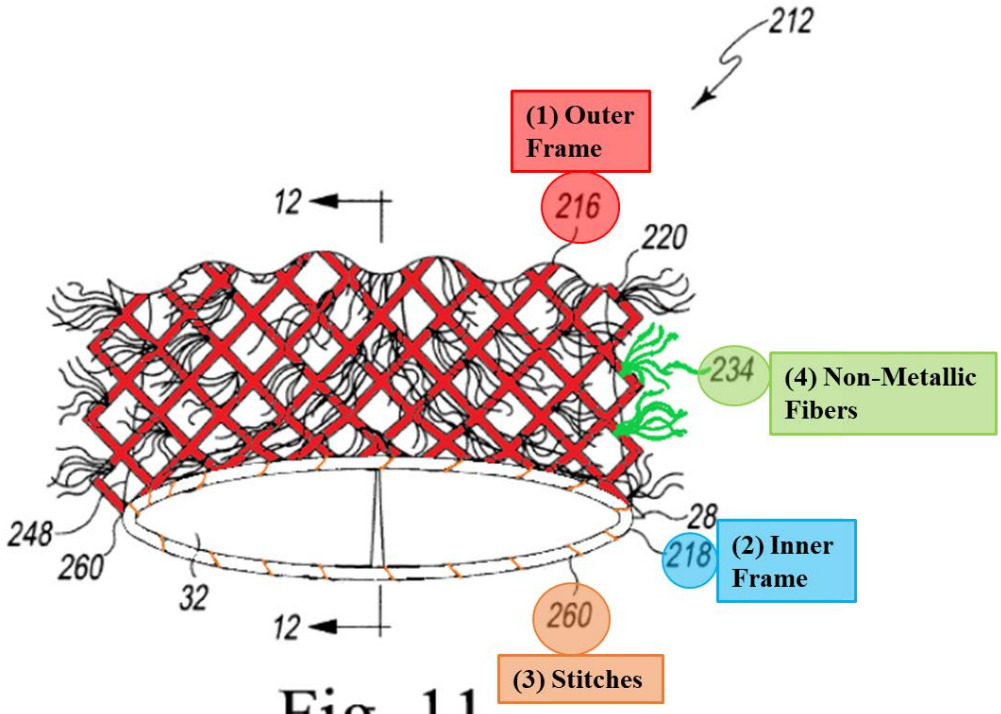

Fig. 11

The prior art discussed below discloses and renders obvious all of the claimed limitations, which were well known in the field by November 2012, the ’236 patent’s priority date (“Critical Date”).

Patent Owner does not make or sell heart valves that practice the ’236 patent. Rather, the ’236 patent is part of a calculated attempt by Patent Owner to secure claims covering Petitioner’s commercially successful SAPIEN 3 Ultra transcatheter heart valve. During prosecution of several related patents, Patent Owner argued that Petitioner’s SAPIEN 3 Ultra was covered by the claims. Patent Owner also recently filed suit against Petitioner asserting that the SAPIEN 3 Ultra infringes the ’236 patent (“the Litigation”). However, in its effort to snare SAPIEN 3 Ultra, Patent Owner broadened its patent claims so far that they cover the prior art.

The ’236 patent claims a dual-frame valve that must include a metallic “outer frame” [red] and an “inner frame” [blue]:

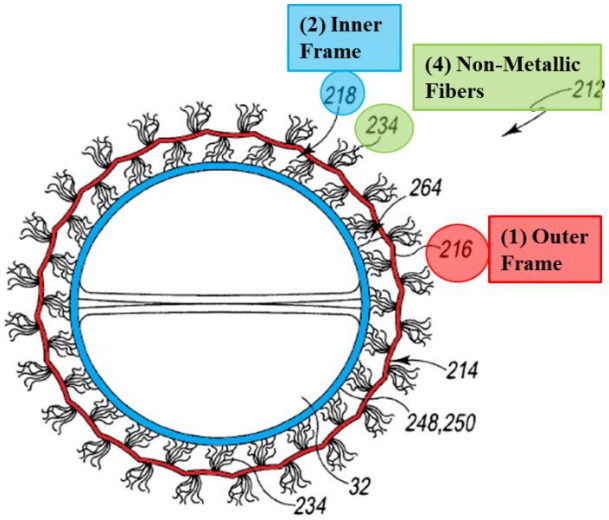

Fig. 13

In contrast, SAPIEN 3 Ultra has only one frame, not inner and outer frames:

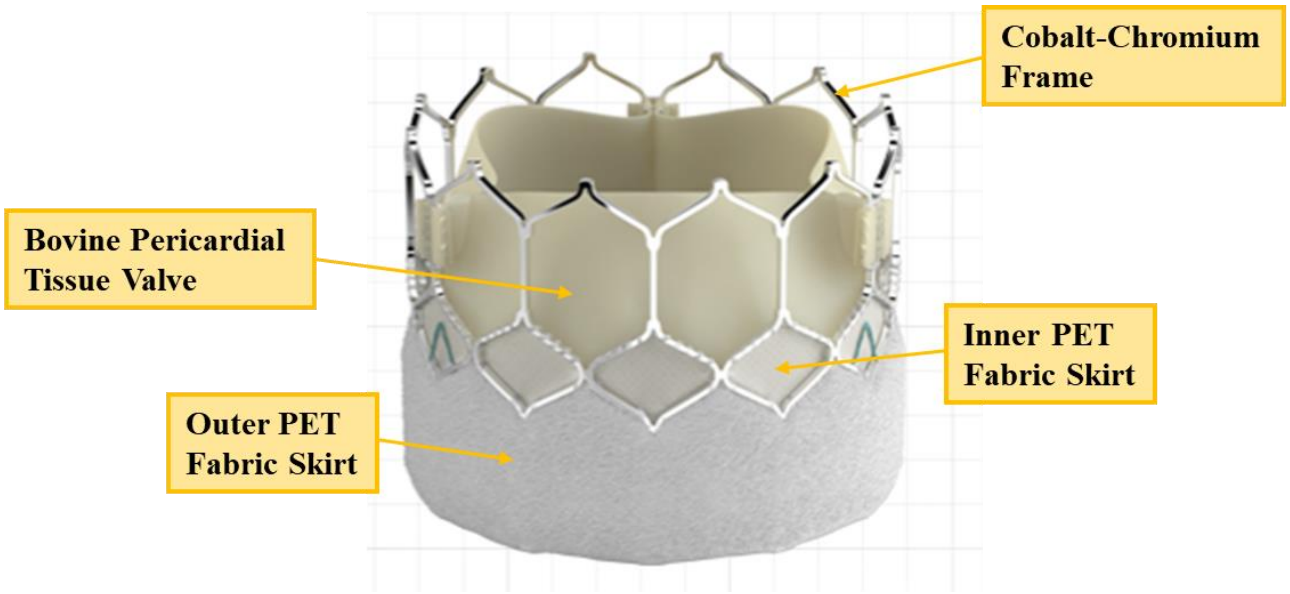

In an attempt to capture SAPIEN 3 Ultra, Patent Owner argued during prosecution of the ’236 patent family that the limitations in claim 1 requiring “an outer frame” and “inner frame” that includes a polymeric “graft covering” are satisfied by a valve

that has ***only*** one frame and a polymeric graft covering. Patent Owner also argued that an outer skirt satisfied the limitation requiring non-metallic fibers positioned radially outwardly of the outer frame. But Petitioner's prior-art publications and patents describe earlier SAPIEN heart valves having precisely these features.

For example, Petitioner's SAPIEN Transcatheter Heart Valve (a predecessor to SAPIEN 3 Ultra) was one of the world's first THVs. Petitioner received regulatory approval for SAPIEN in Europe in 2007 and the United States in 2011, both before the Critical Date. **Cribier**, a publication relied on herein, discloses that SAPIEN includes: (1) a metallic "outer" frame, (2) a "polymeric graft covering," and (3) stitches securing the graft covering to the outer frame.

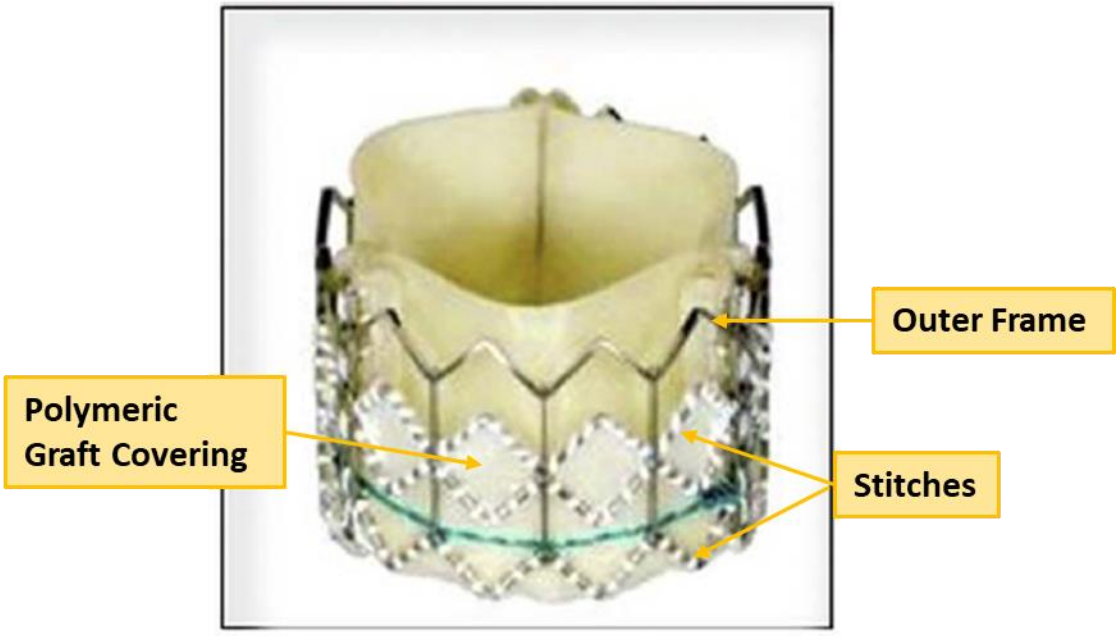

Edwards SAPIEN® THV
23 mm, 26 mm

Petitioner also modified SAPIEN to include an outer cloth comprising (4) an outer seal including non-metallic fibers positioned radially outwardly of the outer frame. **Walther** describes and pictures this modified SAPIEN.

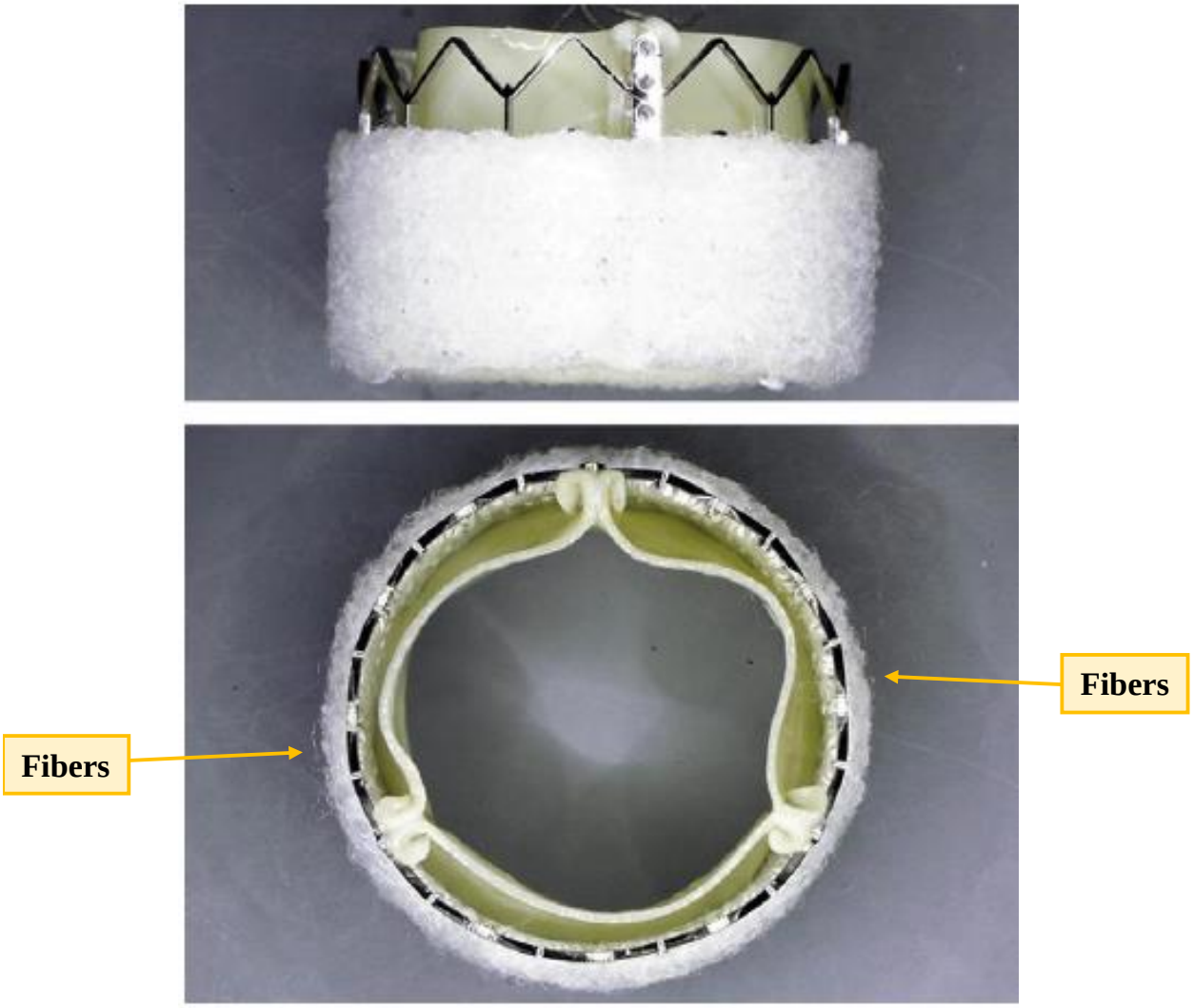

Fig. 1. Cloth valve.

Walther discloses implanting the modified SAPIEN within a surgical valve where the fibrous outer cloth reduces leaks around the SAPIEN, known as paravalvular leakage ("PVL"), and increases fit between SAPIEN and the surgical valve.

Petitioner also filed patent applications in the early 2000s disclosing THVs like SAPIEN having an outer seal for reducing PVL. **Spenser** discloses a heart valve configured for endovascular delivery that includes a sealing material, or cuff portion, positioned externally to the outer frame.

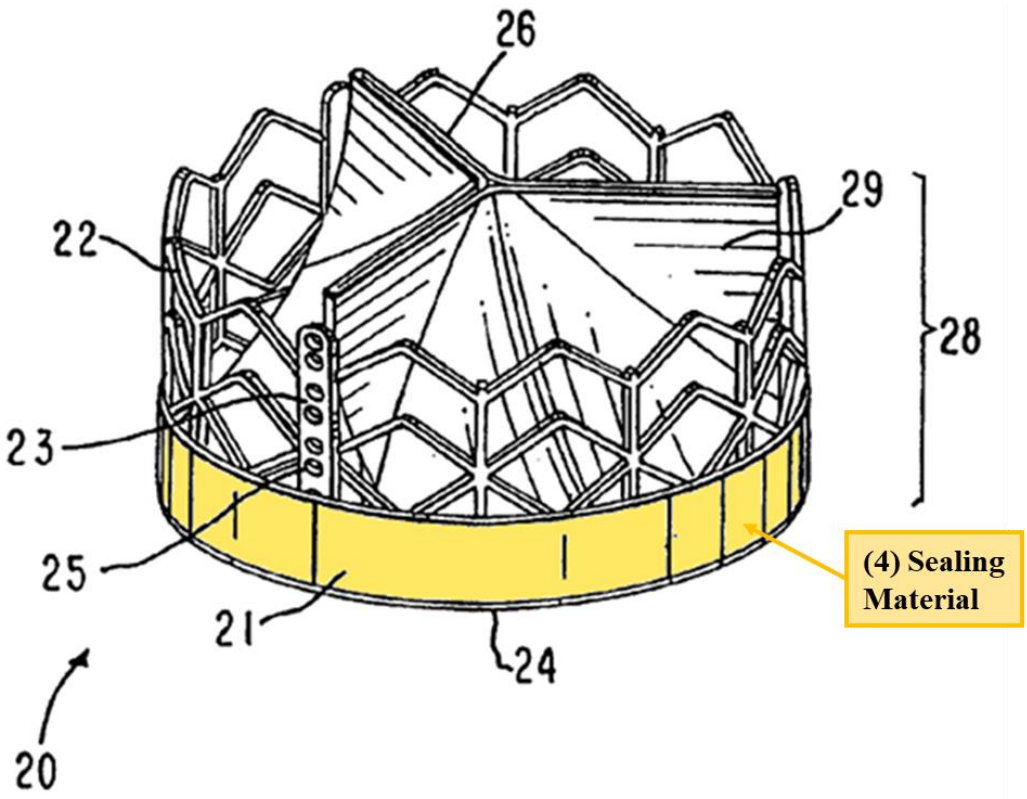

Spenser II also discloses a heart valve having a "compressible material" that "may resemble a cloth or fabric having small fibers extending from the surface of the material." In fact, during prosecution of the '236 patent, Patent Owner admitted that Spenser II "appears to teach a band with fibers emanating therefrom in FIG 22."

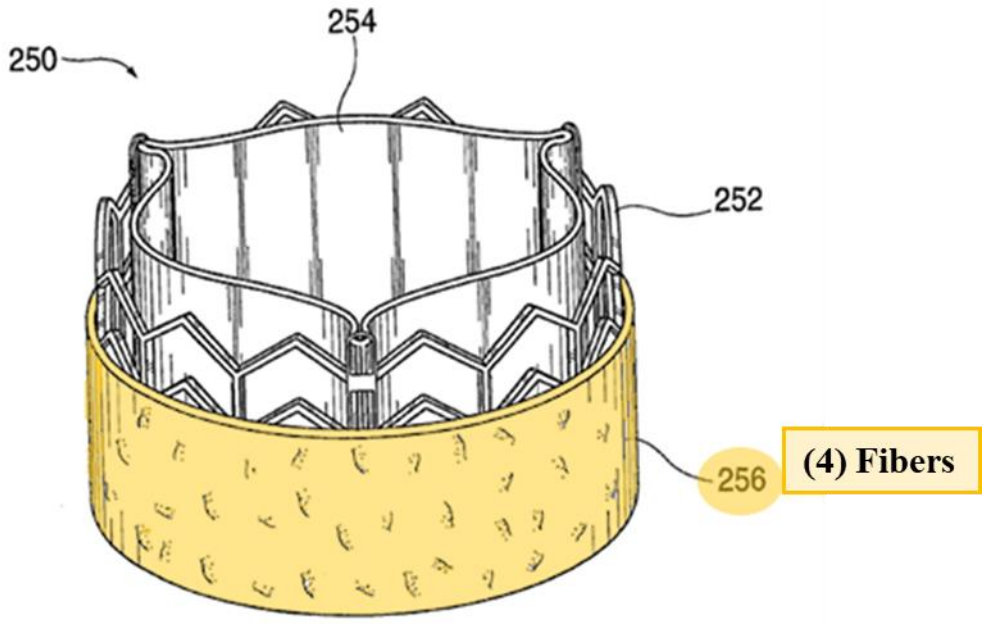

FIG. 22

Spenser II's compressible material prevents PVL by sealing against the patient's native tissue.

Likewise, **Levi** discloses a heart valve having a "polymeric graft covering" and fibrous outer skirt for sealing against the native annulus and leaflets to reduce PVL.

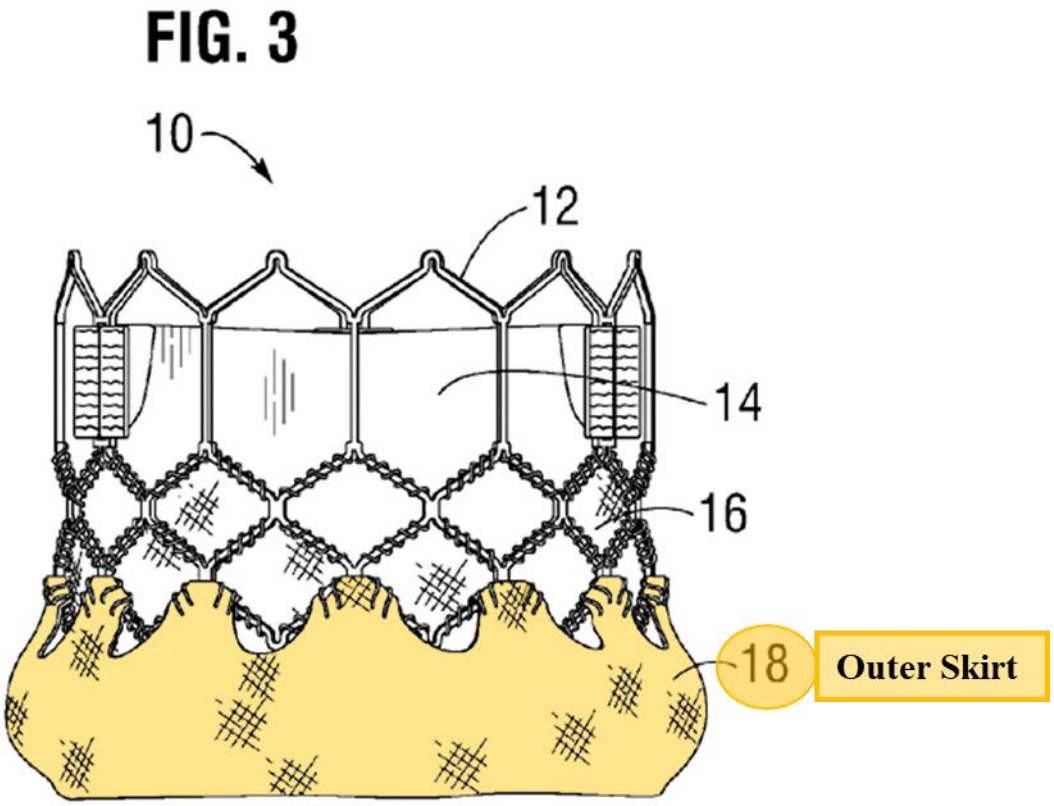

This prior art demonstrates that Petitioner and persons of ordinary skill in the art (POSITAs) disclosed the claimed heart valves before the Critical Date. Unfortunately, the Examiner of the ’236 patent did not apply any of the prior art references relied on herein during prosecution, nor was she aware of all of the prior art. Cribier, Walther, and Spenser were not of record during prosecution. Because Petitioner’s prior inventions and disclosures anticipate or render obvious the challenged claims, the Board should institute this IPR and cancel the challenged claims.

II. ANATOMY AND BACKGROUND

The human heart has two upper chambers (left and right atriums) and two lower chambers (left and right ventricles). (Ex. 1003, ¶46.) The aortic valve connects the left ventricle with the aorta on the left side of the heart. (*Id.*) The aortic valve includes three leaflets that coapt and expand to operate as a one-way valve that regulates blood flow from the left ventricle into the aorta and prevents backflow of blood from the aorta to the left ventricle. (*Id.*)

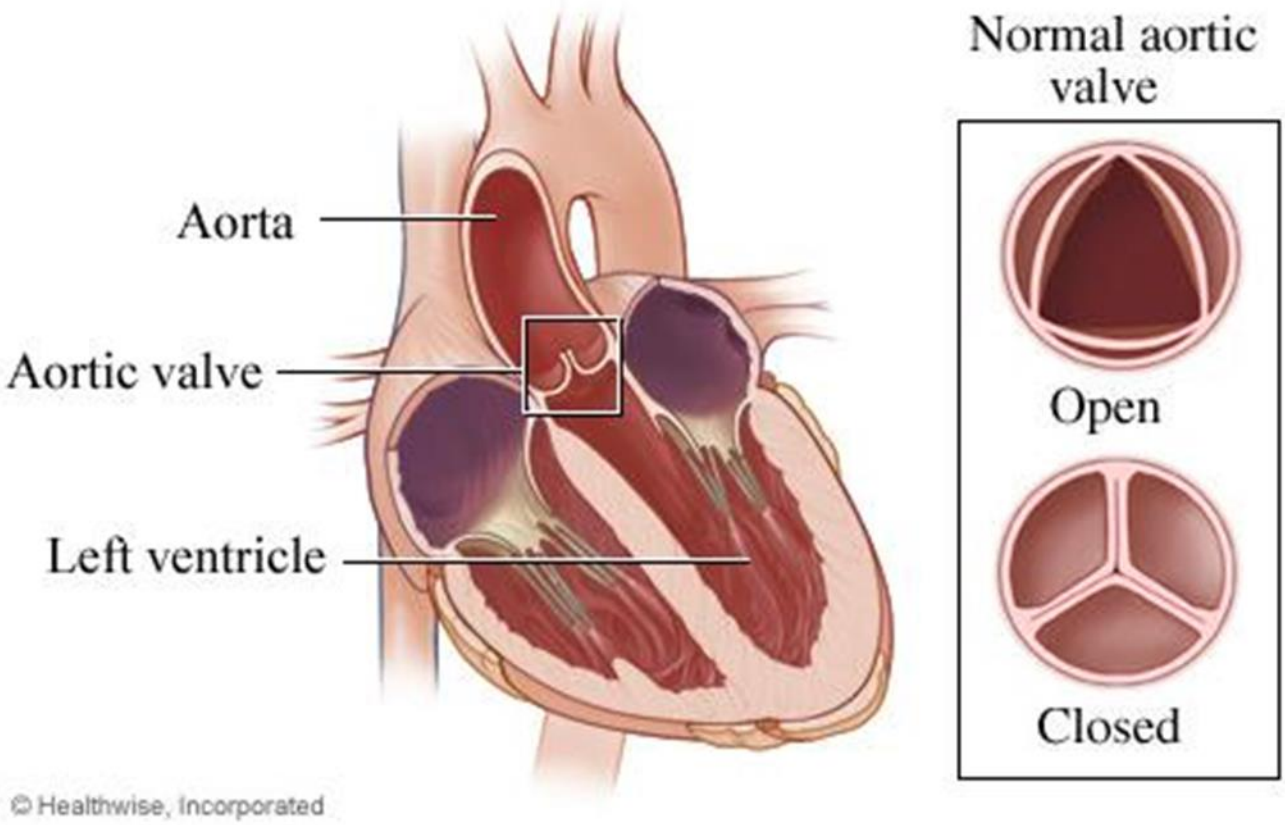

Aortic stenosis occurs when the aortic valve's opening narrows, often by excessive buildup of calcium deposits on the valve. (*Id.*, ¶47) Aortic regurgitation

occurs when the aortic leaflets fail to coapt properly, allowing blood to flow backward from the aorta into the left ventricle.[2] (*Id*.)

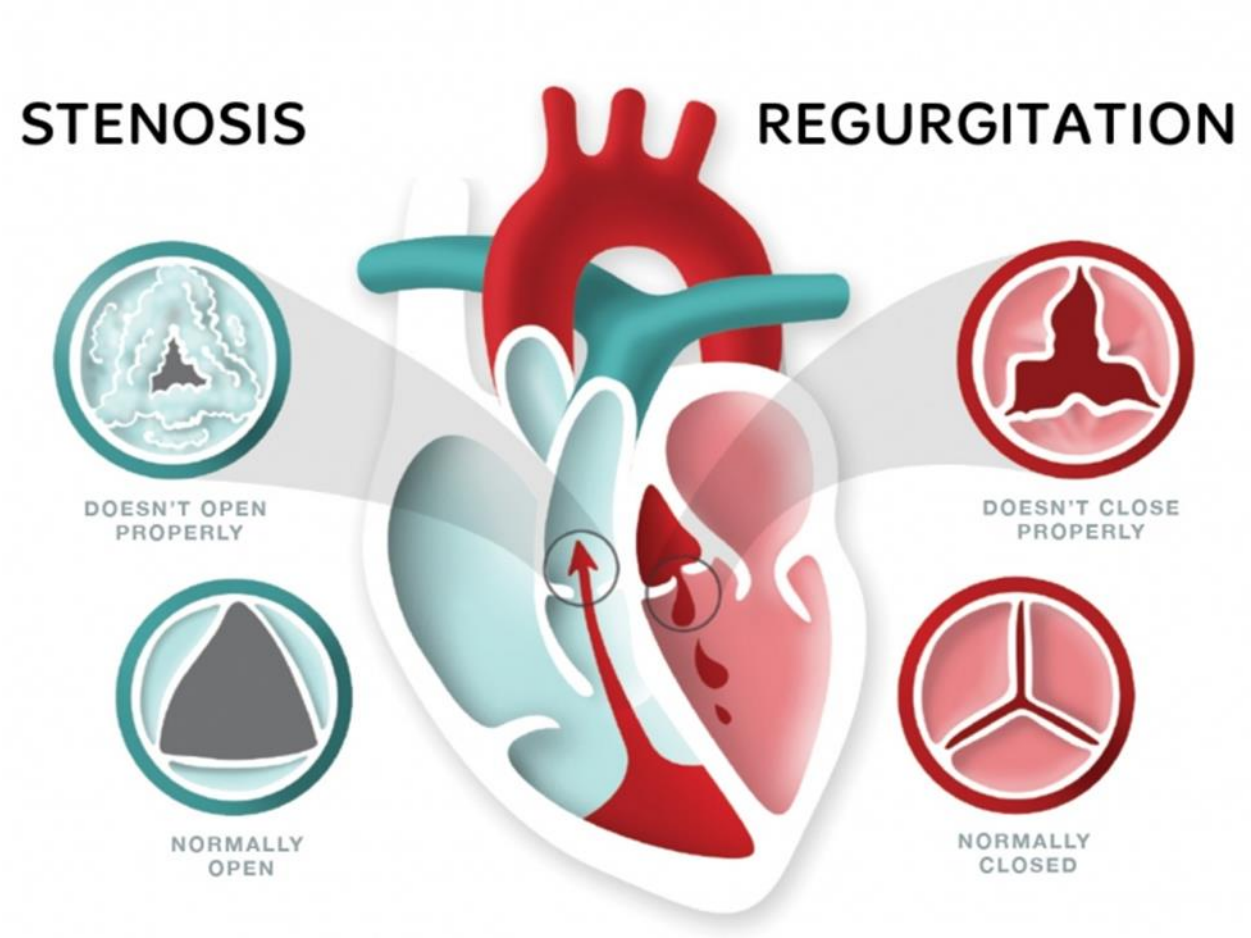

A common treatment for aortic stenosis and regurgitation is replacement of the diseased native valve with a prosthetic valve. (*Id*., ¶48.) An effective prosthetic

[2] The image provided illustrates stenosis and regurgitation in two different heart valves; however, POSITAs would understand that both conditions could affect the aortic valve. (Ex. 1003, ¶47.)

aortic valve must create an effective seal between the valve and the patient's native aortic tissue. (*Id*.) Without such a seal, blood can leak between the prosthetic valve and native tissue, causing PVL.[3] (*Id*.)

To avoid the risks of open-heart surgery, Petitioner developed minimally invasive transcatheter heart valves ("THVs") that could be implanted through the patient's vasculature via a catheter. (*Id*., ¶49.) Unlike surgical valves, which required a surgeon to suture a sewing ring to the patient's tissue, THVs sealed against the patient's tissue by pressing the exterior of the THV against the diseased native leaflets and surrounding tissue, as shown in the illustration of Petitioner's SAPIEN THV below:

[3] "Paraprosthetic," "perivalvular," and "paravalvular" leakage are used interchangeably in the prior art to mean leaks around the prosthetic valve. (Ex. 1003, ¶48, n.1.)

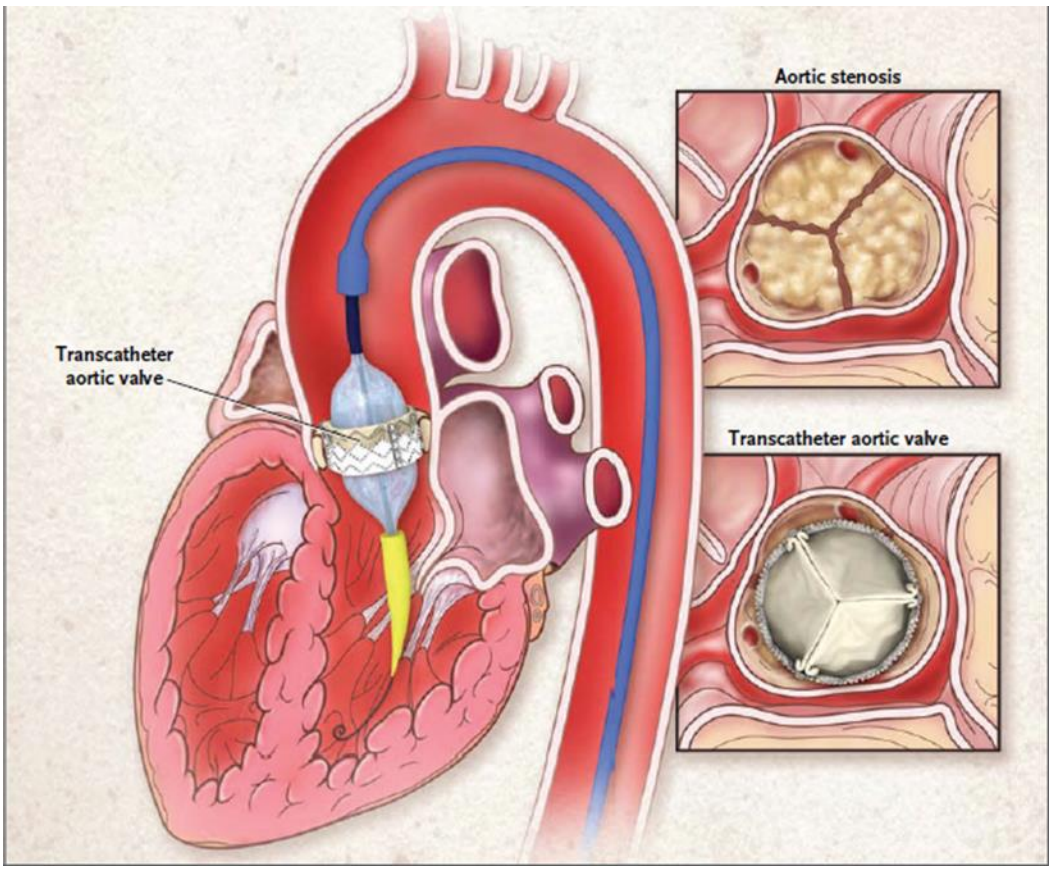

(*Id*.; Ex. 1022, 2189, Fig. 1.) Physicians could implant THVs in severely ill patients not eligible for open-heart surgery, and THVs quickly became highly successful. (Ex. 1003, ¶49.) Despite their success, however, the potential for PVL remained a concern. (*Id*.) As discussed in detail below, this concern motivated those in the art, including Petitioner, to develop methods for minimizing PVL by creating more effective outer seals.

III. STATE OF THE ART

Petitioner was founded in 1958. Petitioner's earliest work related to surgically implantable heart valves. One of Petitioner's first commercial valves, the Starr-

Edwards valve, included a sewing ring 12 that formed a seal between the valve and tissue to prevent PVL:

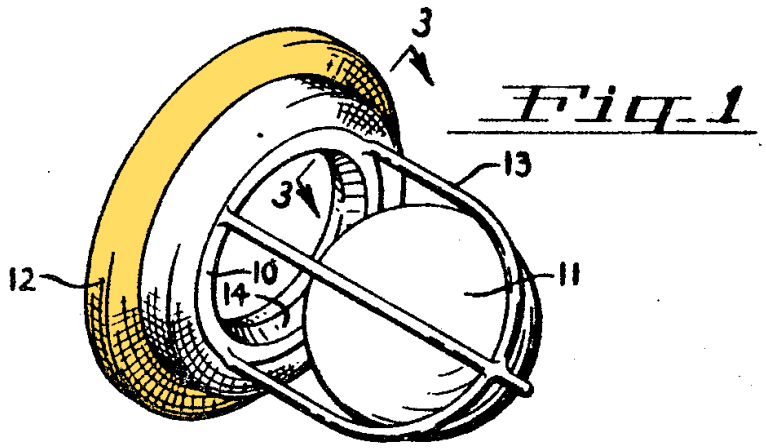

(Ex. 1013, 1:38-46 Fig. 1; Ex. 1003, ¶54.)

In 1989, Dr. Henning Andersen conceived of the first THV. The balloon-expandable valve included a wire stent and was implanted with a catheter. Dr. Andersen's work led to U.S. Patent 5,411,552, which was filed in 1994, and discloses a THV having a metallic outer frame (2, 3) and graft covering (24):

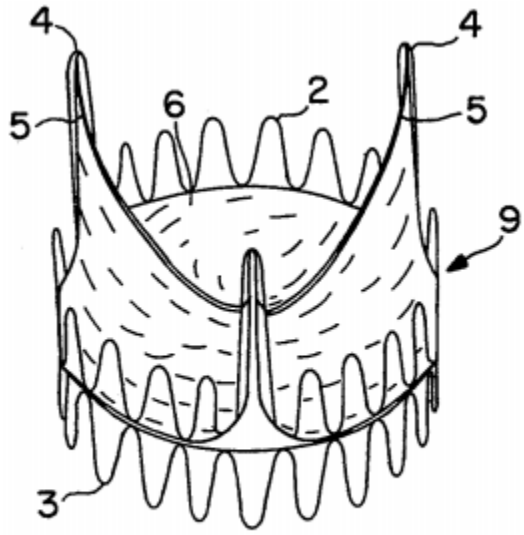

FIG. 2

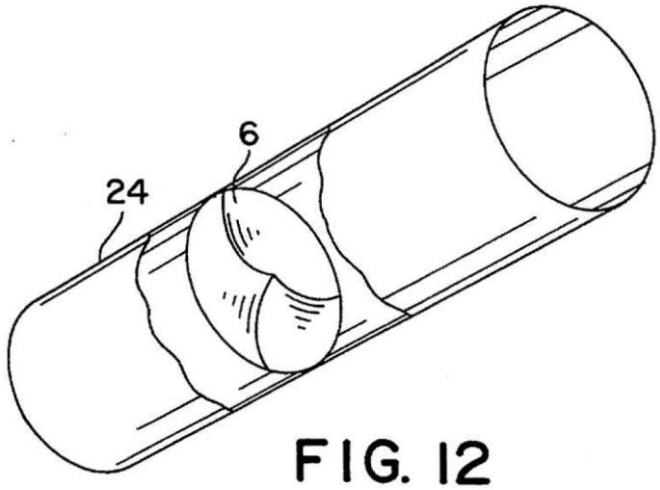

FIG. 12

(Ex. 1014, 4:3-17, 5:9-28, Figs. 2, 11-12; Ex. 1003, ¶¶58-59.)

Shortly thereafter, POSITAs began adding outer seals to THVs to reduce PVL. In 1996, Dr. Alain Cribier filed a patent application on a THV having an internal cover (19′) that is "rolled up to be applied to the external wall of the stent" to form an outer seal (19″) [yellow]:

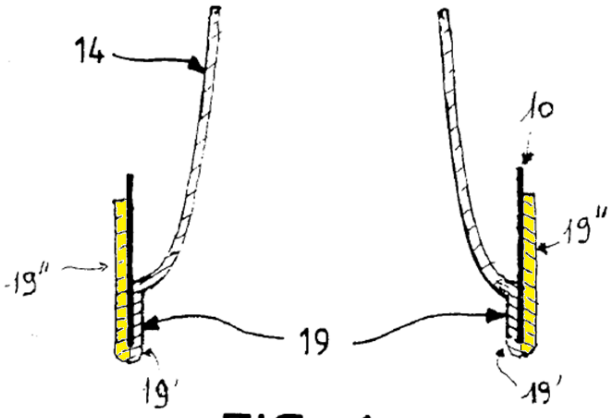

FIG_6d

(Ex. 1018, 22:11-26, Fig. 6d.) The sealing material (19″) presses against the patient's native diseased tissue and prevents blood from leaking through and around the device. (*Id.*)

Similarly, in 2001, Percutaneous Valve Technologies ("PVT"), a company founded by Dr. Cribier, filed a patent application on a THV that disclosed an outer seal, or "cuff portion," highlighted in yellow below, and wrapped around the support stent's inlet:

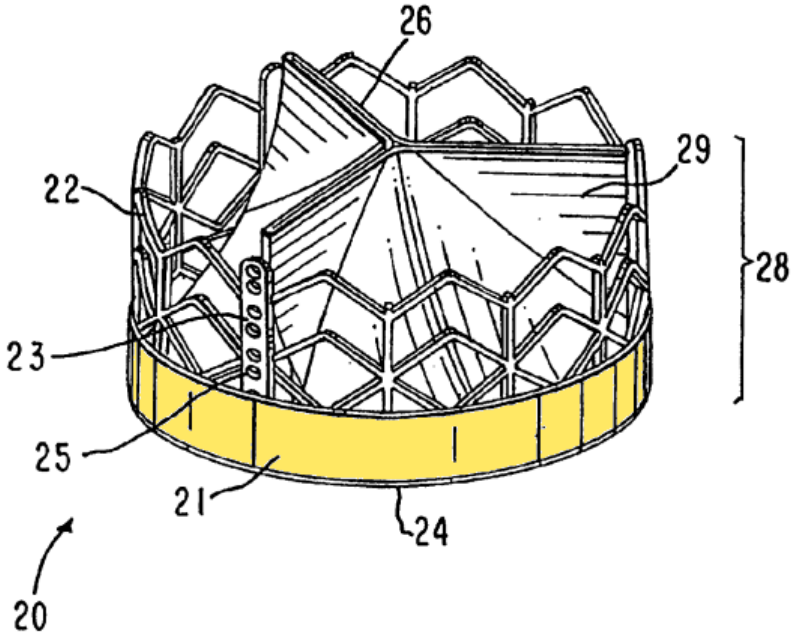

(Ex. 1019, 9:19-22, Fig. 1.) The cuff portion helped prevent PVL. (*Id.*, 8:47-50; Ex. 1003, ¶65.) **Spenser**, relied on herein, is a continuation-in-part of the 2001 patent application and includes the above embodiment. (Ex. 1010, 13:22-25, Fig. 1.)

In April 2002, Dr. Cribier performed the first-in-human implantation of a THV in the aortic valve position. (Ex. 1025, 3006.) The THV included a metallic balloon-expandable stent that was crimped onto a delivery balloon and endovascularly delivered through the right femoral vein:

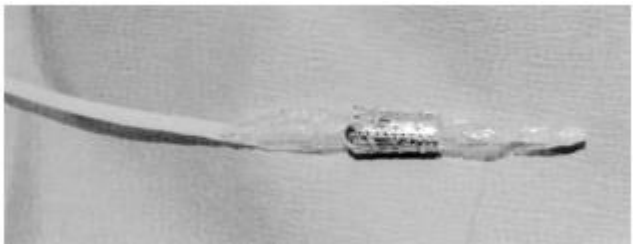

(*Id.*, 3006-3007, Fig. 1.)

In 2004, Petitioner acquired PVT and began developing the Cribier-Edwards THV, which included (1) a metallic "outer" frame, (2) a polymeric graft covering, and (3) stitches securing the graft covering to the outer frame:

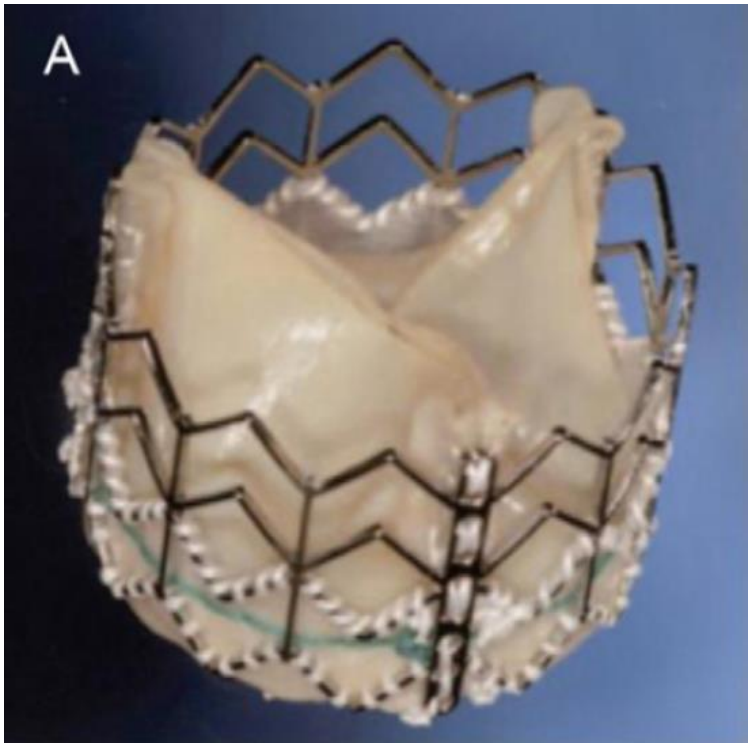

(Ex. 1023, 154, Fig. 3A (excerpt); Ex. 1003, ¶69.)

Petitioner also collaborated with physicians to modify the Cribier-Edwards THV to include an external fabric cuff designed "to provide a better seal…[and] minimize[e] paraprosthetic leak." (Ex. 1017, 2, Fig. 2.)

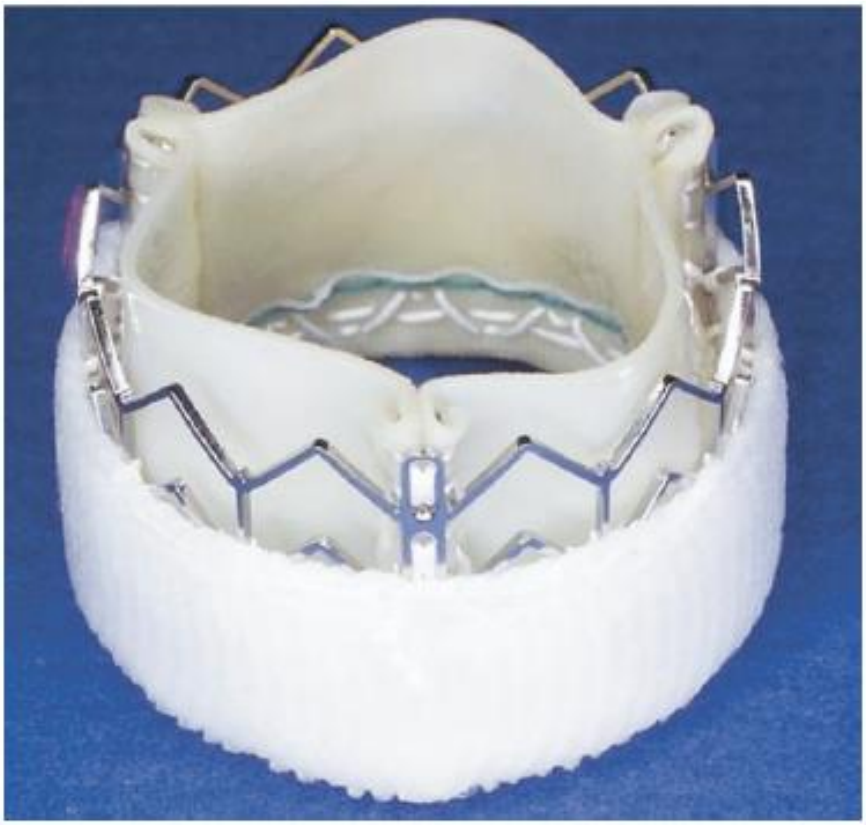

Fig 2. The fabric cuff surrounding the Cribier-Edwards transcatheter valve may provide a better seal for valve-in-valve applications (photograph courtesy of Edwards Lifesciences LLC, Irvine, CA).

In 2004, Petitioner filed **Spenser II**, which discloses a THV having "a layer of compressible material 256 … disposed along an outer surface of the stent structure 252" to prevent PVL:

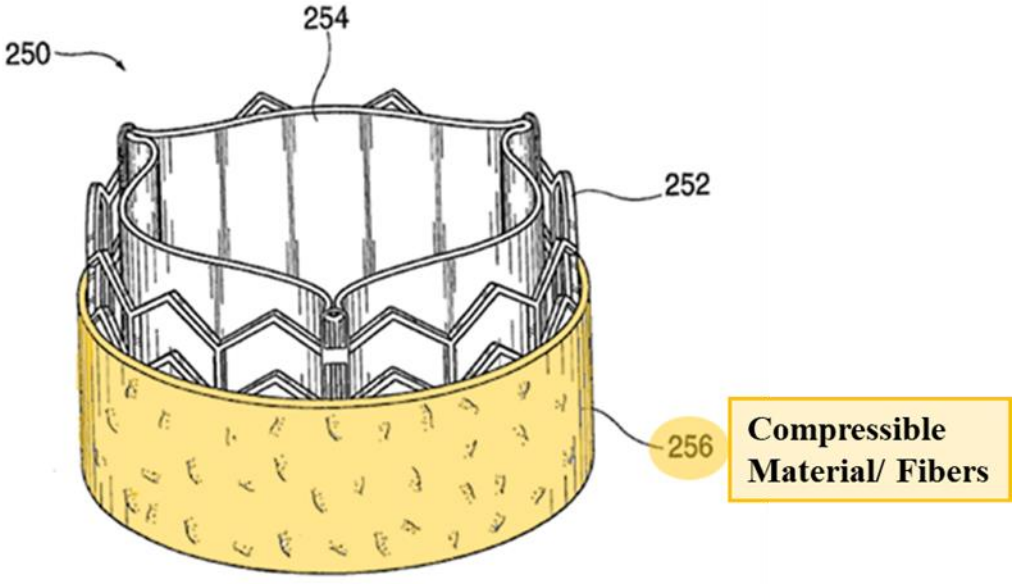

FIG. 22

(Ex. 1011, [00145], Fig. 22; Ex. 1003, ¶70.) The compressible material "may resemble a cloth or fabric having small fibers extending from the surface of the material" and formed a mechanical seal with the native tissue to prevent PVL. (*Id.*)

By 2007, Petitioner had modified the Cribier-Edwards valve to create SAPIEN. SAPIEN was one of the world's first commercially available THVs and the subject of a large clinical trial, the results of which were published in The New England Journal of Medicine in 2010. (Ex. 1022.). SAPIEN addressed a long-felt need in the industry for an aortic replacement valve that did not require open-heart surgery. (Ex. 1003, ¶73; *see e.g.*, Ex. 1012, 355-56; Ex. 1022, 2188; Ex. 1027, 207-208.) The FDA approved SAPIEN for use in patients in 2011. (Exs. 1032-1033.)

Walther, a 2011 publication referenced herein, discloses implanting SAPIENs having a fibrous outer cloth into existing surgical valves:

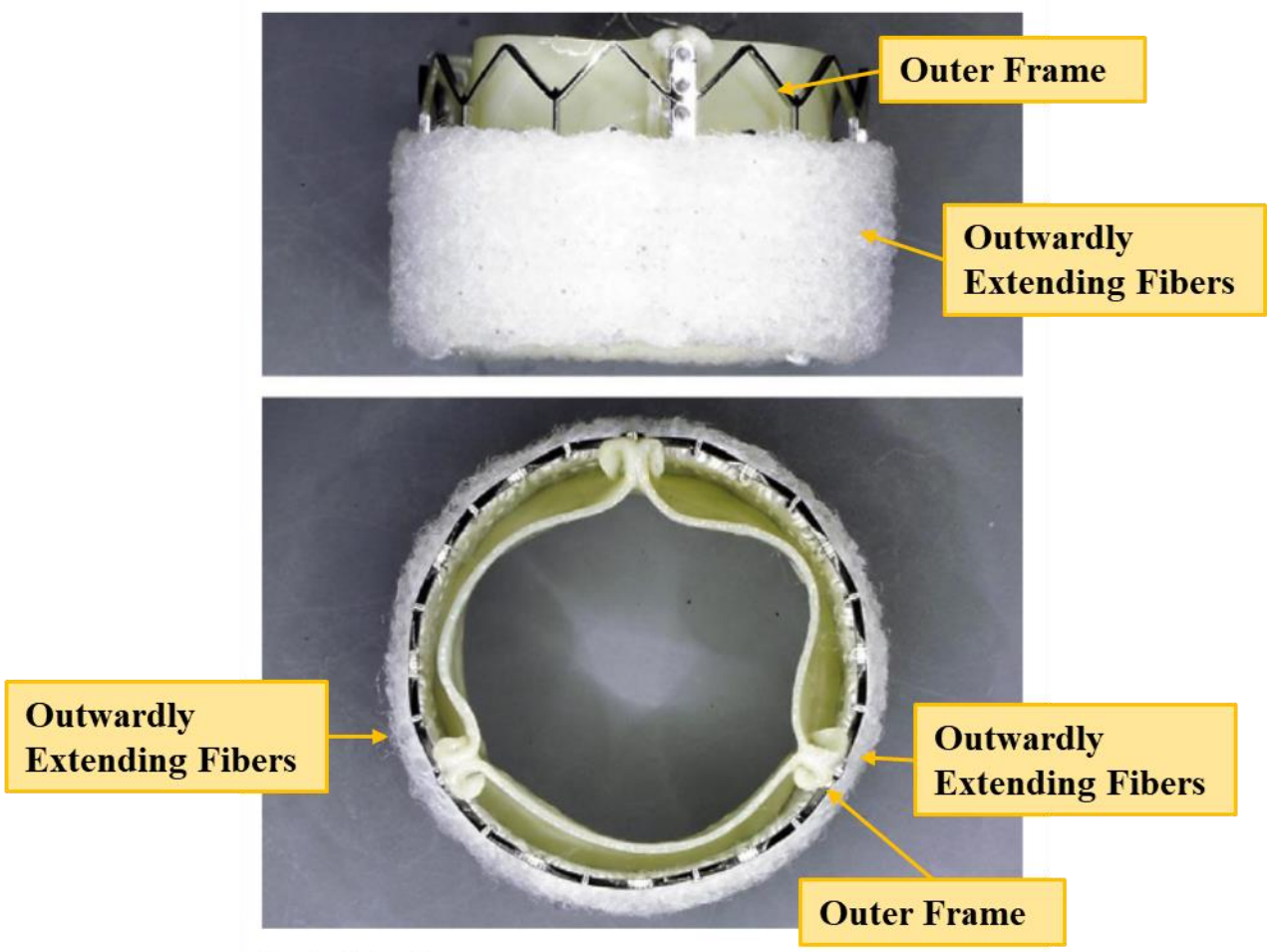

Fig. 1. Cloth valve.

(Ex. 1007, 1120-21, Fig. 1.) The "addition of an outer cloth to the SAPIEN™ valve [was] designed to reduce [PVL] by creating a seal between the two valves." (*Id.*) Thus, like THVs implanted in native valves, Walther's outer cloth created a seal by pressing against the leaflets of the previously implanted surgical valve.

Similarly, **Levi**, a patent filed by Petitioner in 2010, discloses an outer skirt of woven PET fabric secured to the exterior surface of the frame:

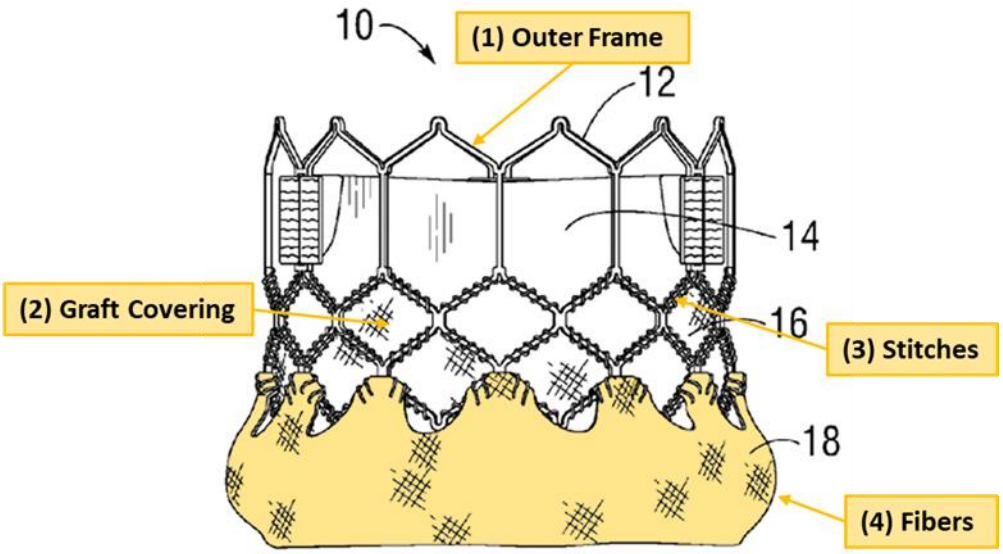

(Ex. 1008, 13:49-14:14, Fig. 3.) Levi's outer skirt forms "a good fluid-tight seal between the valve and the native annulus." (*Id.*)

POSITAs also used fibrous outer seals to prevent PVL in non-aortic valve procedures as well. For example, Birdsall, a patent filed in 2006 discloses the use of a fibrous outer seal in a prosthetic valve implanted within a vascular conduit. (Ex. 1057, Abstract.) Birdsall's valve may be covered with a "barrier material 308" that "comprises directionally oriented microfibers . . . extending outward" that "contact the interior wall of the conduit and form a barrier that prevents blood from flowing

around stented valve 310, between the outer surface of the stented valve and the inner wall of the conduit":

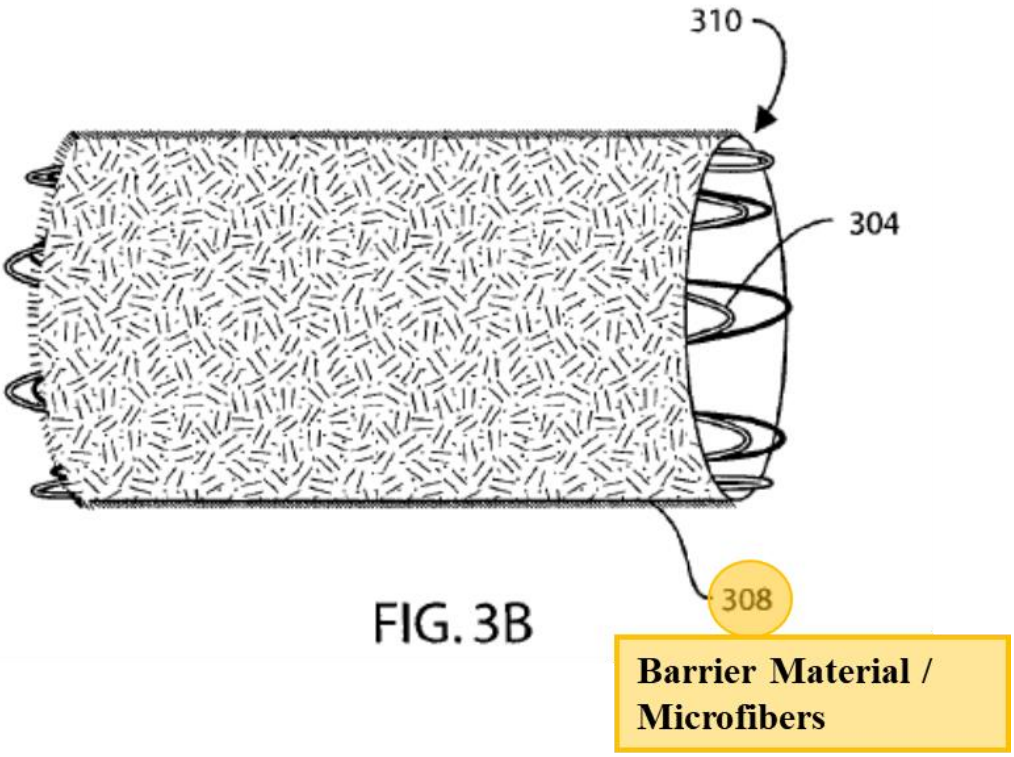

FIG. 3B

(*Id.*, 6:9-33, Fig. 3B.)

The above references show that the challenged claims merely combine known heart-valve features according to known techniques to yield predictable results. The claims do not describe any new heart-valve features or combine the known features in a nonobvious way. Therefore, the challenged claims are unpatentable.

IV. THE ’236 PATENT

A. Overview

The ’236 patent describes a “transcatheter aortic valve assembly” having a “dual-frame” for replacing an aortic heart valve. (Ex. 1001, 11:61-12:21.) The “dual-frame” includes a “self-expanding outer frame 216” [red] and a “balloon-expandable inner frame 218 [blue] that is secured to the self-expanding outer frame 216 and houses the valve 32”:

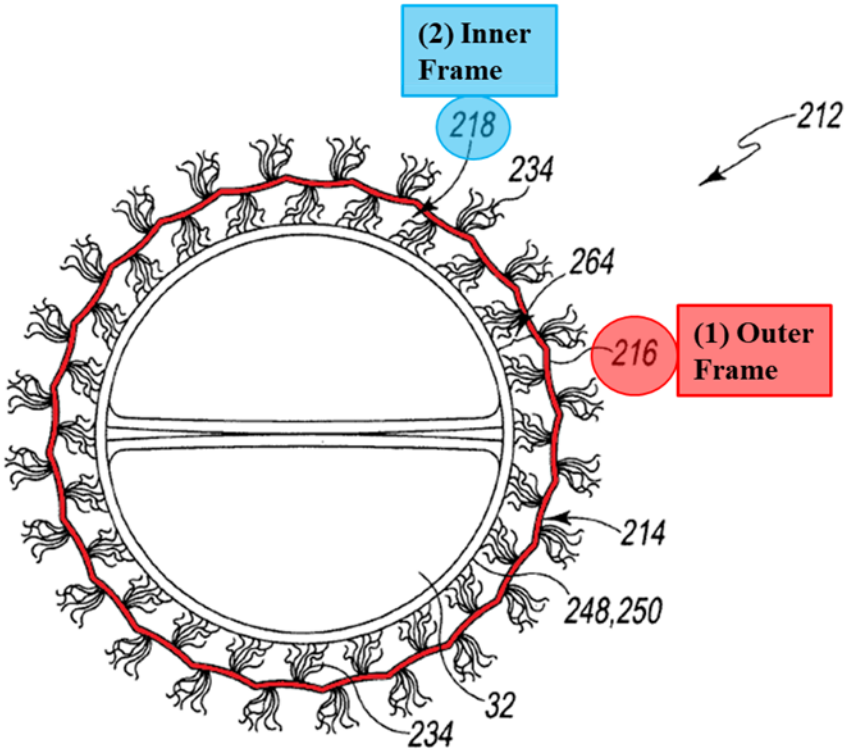

Fig. 13

(*Id.*, 12:9-12, Fig. 13.)

The metallic or polymeric outer frame [red] defines an "open-cell stent configuration." (*Id.*, 12:12-18, 13:17-20, Fig. 9.) The outer frame includes radially extending collagen fibers [green] attached to the frame to aid in preventing PVL and migration of the valve. (*Id.*, 12:43-46.) The metallic or polymeric inner frame [blue] is a "balloon-expandable tubular stent." (*Id.*, 13:41-51.) Stitches [orange] secure the inner frame to the outer frame. (*Id.*, 14:6-8.)

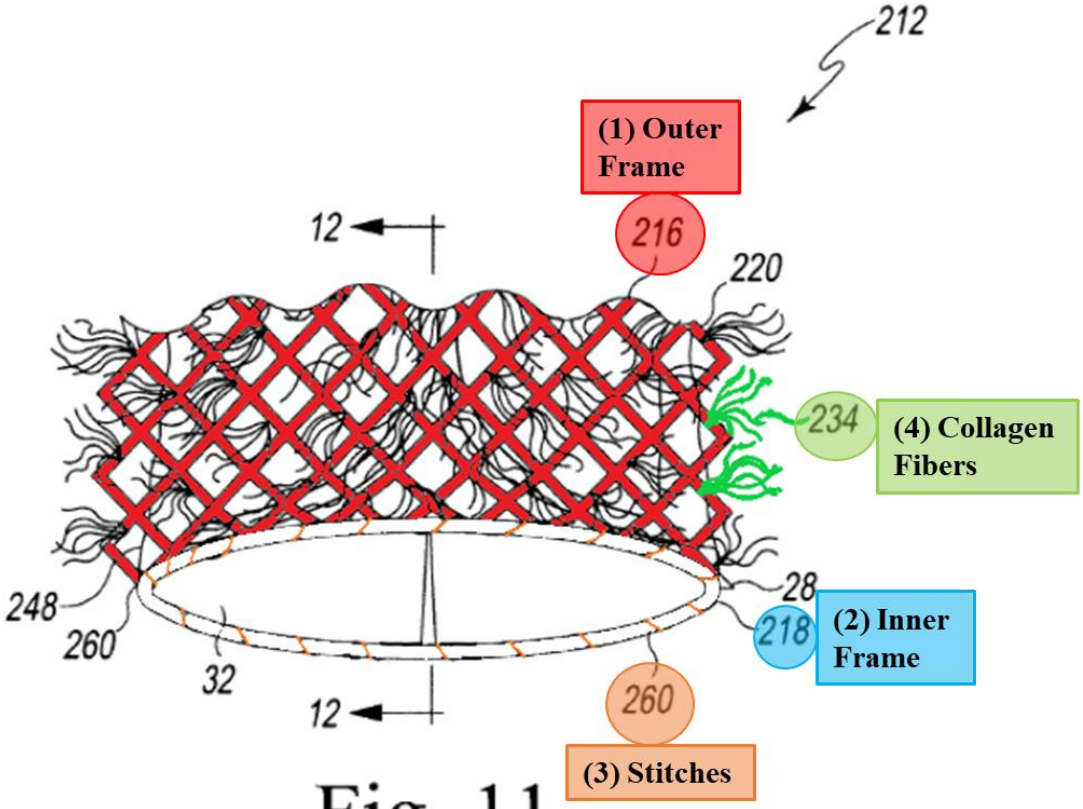

Fig. 11

B. Prosecution History

The examiner issued a single, non-final office action that included a single prior-art-based rejection. (Ex. 1002, 104-108.) None of the references asserted herein were applied in the Examiner's rejection. (*See id.*)

C. The Critical Date

The '236 patent claims priority to two provisional applications: application No. 61/567,458 ("the '458 provisional"), filed December 6, 2011; and application No. 61/723,446 ("the '446 provisional"), filed on November 7, 2012. (Ex. 1001.) During prosecution of U.S. Patent No. 10,792,172 (the "'172 patent"), which is a parent to the '236 patent, Patent Owner stated that the '172 patent's "effective filing date . . . is believed to be based on Provisional Patent Application No. 61/723,446, filed on November 7, 2012." (Ex. 1049, 274.) Additionally, in the Litigation, Patent Owner concedes that it did not file any patent applications describing outwardly extending fibers until 2012. (Ex. 1050, 9.)

Patent Owner is correct that the '236 patent is not entitled to a priority date of December 6, 2011 because the '458 provisional does not adequately support or enable the '236 patent's claims. *New Railhead Mfg., L.L.C. v. Vermeer Mfg. Co.*, 298 F.3d 1290, 1294 (Fed. Cir. 2002). Patent Owner first added the disclosure of outwardly extending fibers in the November 2012 provisional. (Ex. 1006, [0024].).

V. STATEMENT AND RELIEF REQUESTED

A. IPR Grounds

Petitioner asserts the following grounds of unpatentability:

Ground	Claims Challenged	Pre-AIA 35 U.S.C. §	References
1	1-4	103	Cribier + Walther
2	1-4	103	Spenser + Walther
3	1-4	103	Spenser + Spenser II
4	1-4	102(e)	Levi
5	1-4	103	Levi
6	1-4	103	Levi + Walther
7	1-4	103	Levi + Spenser II

B. The Asserted References Are Prior Art

The Critical Date of the ’236 patent is November 7, 2012. (*Supra* §III.C.) The following references are prior art under pre-AIA §102(b):

(1) Cribier (Ex. 1012) published in August 2009 and was publicly available by at least August 28, 2009 (Ex. 1059, ¶¶58-65);

(2) Walther (Ex. 1007) published online on April 3, 2011 and in print on November 1, 2011 and was publicly available online on or shortly after

April 3, 2011 and in print on or shortly after November 1, 2011 (Ex. 1059, ¶¶47-57; *see also* Ex. 1065, n. 39);

(3) Spenser (Ex. 1010) issued on March 31, 2009; and

(4) Spenser II (Ex. 1011) published on January 12, 2006.

Levi (Ex. 1008) was filed on Oct. 5, 2011 and published on May 17, 2012, and is prior art under pre-AIA §102(e).

C. <u>The Asserted References Are Analogous Art</u>

The asserted references are analogous art that is usable in an obviousness combination. *Unwired Planet, LLC v. Google Inc.*, 841 F.3d 995, 1000 (Fed. Cir. 2016). Each reference is from the same field as the ’236 patent, e.g., minimally invasive devices for replacing heart valves. (Ex. 1003, ¶36.) The references are also pertinent to the problem the inventor was focused on, e.g., treating aortic regurgitation or stenosis through a minimally invasive procedure. (*Id*.) As analogous art, a POSITA is presumed to have been aware of these references. *In re Nilssen*, 851 F.2d 1401, 1403 (Fed. Cir. 1988).

VI. <u>LEVEL OF ORDINARY SKILL</u>

A POSITA in November 2012 would have been an interventional cardiologist with a working knowledge of heart valve designs and endovascular prostheses. This

POSITA would, where necessary, work with a medical device engineer to experiment with or manufacture a prosthetic heart valve. (Ex. 1003, ¶45.)

VII. CLAIM CONSTRUCTION

The claim terms should receive their ordinary and customary meaning as understood by a POSITA at the time of filing and in accordance with the specification and the prosecution history. 37 C.F.R. §42.100(b); *see Phillips v. AWH Corp.*, 415 F.3d 1303 (Fed. Cir. 2005) (establishing standard).

VIII. PROPOSED GROUNDS FOR UNPATENTABILITY

A. Ground 1: Claims 1-4 Obvious Over Cribier and Walther

Walther discloses modified SAPIENs having fibrous outer sealing cloths:

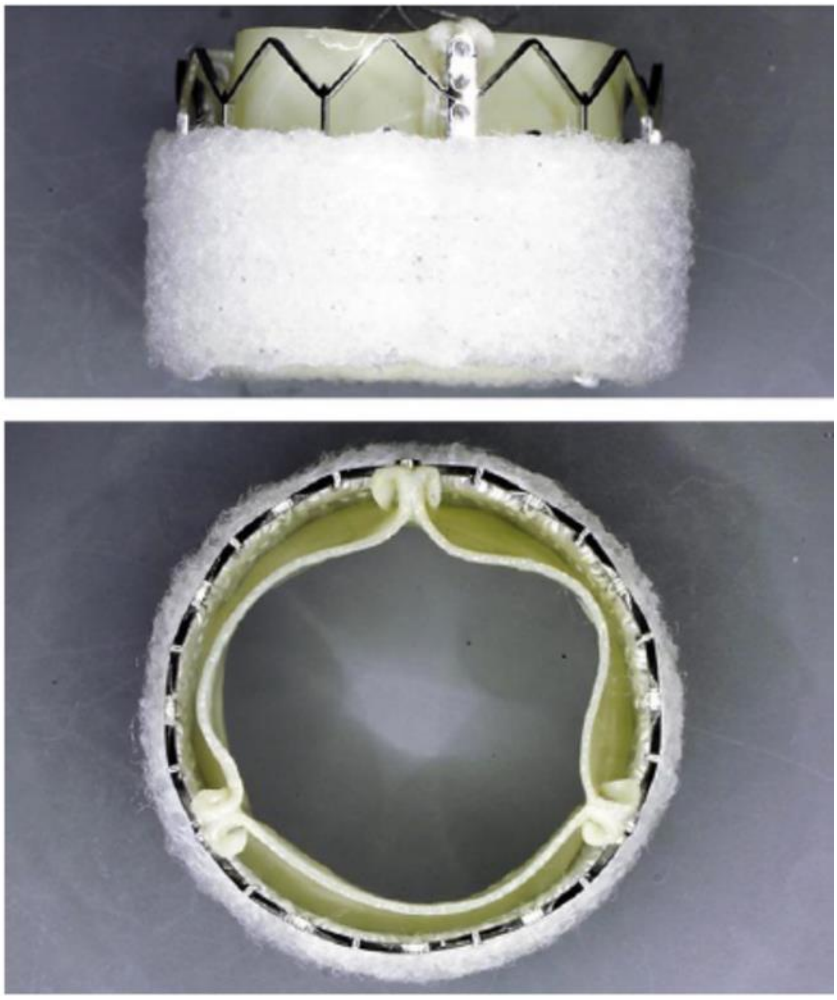

Fig. 1. Cloth valve.

(Ex. 1007, 1120-21, Figs. 1-3.) Walther's modified SAPIENs were "identical" to SAPIEN except for the outer cloth. (*Id.*, 1120.)

Cribier describes endovascularly delivering SAPIEN and includes additional details about the valve. (Ex. 1012.) Thus, Cribier combined with Walther discloses all the limitations in claims 1-4 and renders the claims obvious. (Ex. 1003, ¶97.)

1. Claim 1

Cribier and Walther render claim 1 obvious. (Ex. 1003, ¶¶98-147.)

a. Preamble

Cribier discloses a "transcatheter aortic valve assembly." (*Id.*, ¶100.) Cribier describes methods of "transcatheter aortic valve implantation with the Edwards-Sapien® heart valve using the transfemoral approach." (Ex. 1012, 347-355, Fig. 1.) SAPIEN is a "valve assembly." (*Id.*, 348.)

Similarly, Walther discloses SAPIEN with an outer cloth stitched to its perimeter. (Ex. 1007, 1120-21, Fig. 1.) Walther's cloth-covered valve is identical to SAPIEN except for the outer cloth. (*Id.*) Walther discloses delivering the modified SAPIENs through a catheter (the Ascendra system) and, thus, Walter also discloses a "transcatheter aortic valve assembly." (*Id.*, 1121; Ex. 1003, ¶102.) Notably, while the '236 patent discloses that the valve is compressible and expandable, which is necessary for transcatheter deployment, the '236 patent does not disclose any sizing for the catheter or the compressed valve. (Ex. 1003, ¶102.)

b. <u>Outer Frame</u>

Cribier discloses "an outer frame formed from a metallic material." (Ex. 1003, ¶¶103-104.)

Cribier discloses that SAPIEN includes "a tubular slotted stainless-steel" stent. (Ex. 1012, 348.) The stent surrounds the other valve components, making it an "outer frame":

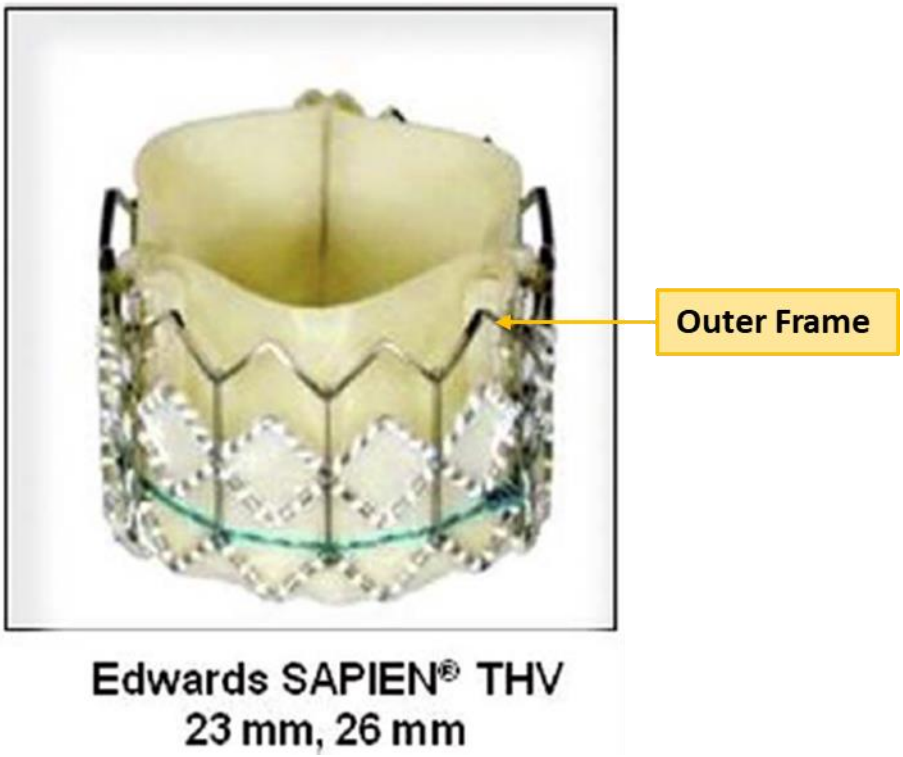

(*Id*., Fig. 1; Ex. 1003, ¶104.)

c. <u>Inner Frame</u>

Cribier discloses "an inner frame that engages a prosthetic heart valve having prosthetic leaflets, wherein the inner frame includes a cylindrically extending

polymeric inner graft covering extending at least partially radially outwardly of the prosthetic heart valve and radially inwardly of the outer frame for providing sealing to the prosthetic heart valve." (Ex. 1003, ¶¶105-110.)

During prosecution, Patent Owner argued that an inner graft covering ***alone*** satisfies the limitation "an inner frame…wherein the inner frame ***includes*** a cylindrically polymeric inner extending graft covering." For example, Patent Owner attempted to distinguish prior art on the ground that it allegedly did not include a "graft forming the inner frame." (Ex. 1002, 187). Similarly, during prosecution of a related patent having the same limitation, Patent Owner argued that Petitioner's SAPIEN 3 Ultra product is "covered by the claimed invention" because it "includes an inner frame that is a graft." (Ex. 1046, 21-22.) Patent Owner made the same allegations in the Litigation, despite SAPIEN 3 Ultra not having both outer and inner frames.[4] (Ex. 1050, 43-44.) Patent Owner also argued the claimed inventions improved upon the art "by having an inner frame that is a graft covering around the heart valve[.]" (Ex. 1046, 9.)

[4] Petitioner preserves alternative arguments that the '236 patent does not describe an inner frame that is a graft covering, and that a graft covering cannot be an inner frame.

Cribier discloses that SAPIEN includes an inner "(PET) fabric cuff," which is a polymeric graft covering:

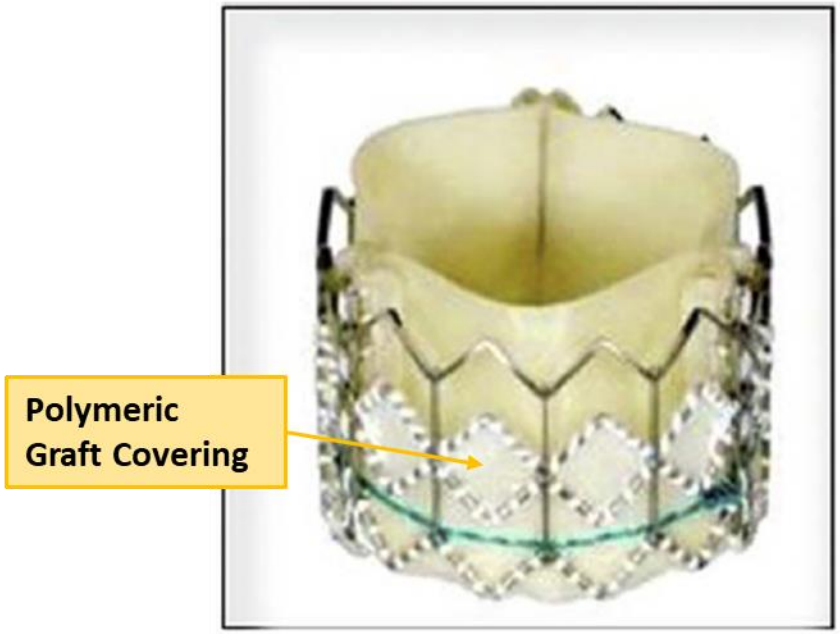

Edwards SAPIEN® THV
23 mm, 26 mm

(Ex. 1012, 348, Fig. 1.) The fabric cuff cylindrically extends at least partially radially outwardly of the prosthetic heart valve and radially inwardly of the outer frame. (*Id*.) Based on Patent Owner's statements during the related prosecution, SAPIEN's fabric cuff meets the "inner frame" limitation. (Ex. 1003, ¶109.)

Cribier also discloses that SAPIEN includes a "tissue valve" comprised of "prosthetic leaflets." (Ex. 1012, 348.) SAPIEN's fabric cuff "engages" the leaflets along the green suture line (above). (Ex. 1012, Fig. 1; Ex. 1003, ¶109.) The fabric cuff provides sealing to the prosthetic valve. (Ex. 1003, ¶110; *see also* Ex. 1023, 154

(SAPIEN included a "higher sealing cuff…to reduce paravalvular leaks."); Ex. 1024, 1830 (same); Ex. 1027, 213 (same).) If the cuff did not provide sealing to the valve, blood could leak around the valve and undermine its efficacy. (Ex. 1003, ¶110.)

d. <u>Stitching</u>

Cribier discloses that "the outer frame is secured to the inner graft covering by stitching." (Ex. 1003, ¶¶111-112.)

White stitches secure SAPIEN's fabric cuff to the frame:

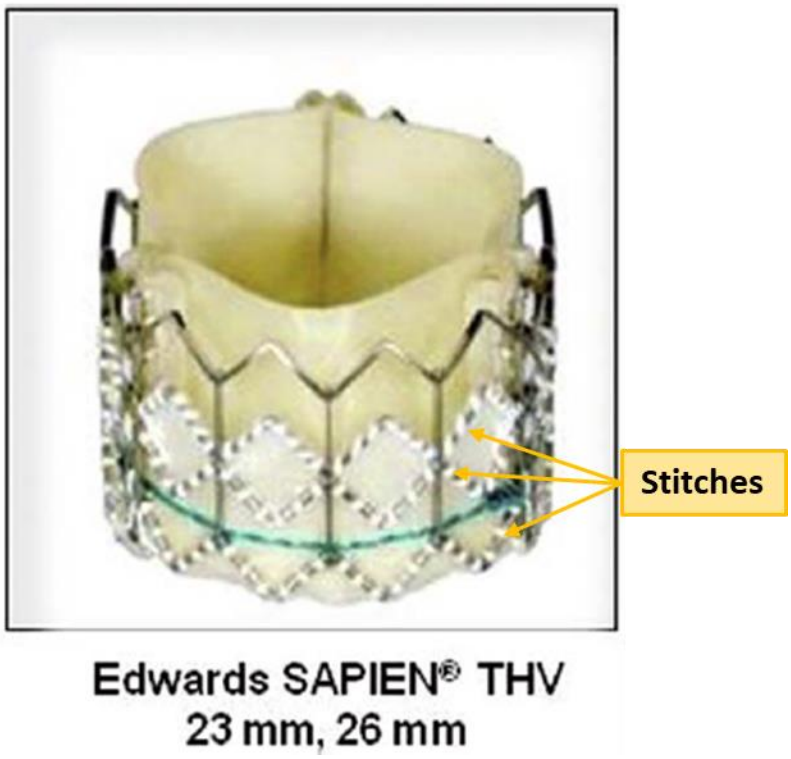

(Ex. 1012, 348, Fig. 1; Ex. 1003, ¶112.)

e. <u>First Portion of Fibers</u>

Cribier and Walther render obvious "a first portion of fibers positioned radially outwardly of the outer frame that is configured to form a first sealing interface against the annulus and native valve leaflets of the patient when the first portion of fibers is compressed thereagainst, wherein the first portion of fibers extend radially outwardly of the outer frame, wherein the first portion of fibers is non-metallic." (Ex. 1003, ¶¶113-130.)

Walther's outer PET cloth is positioned radially outwardly of the outer frame:

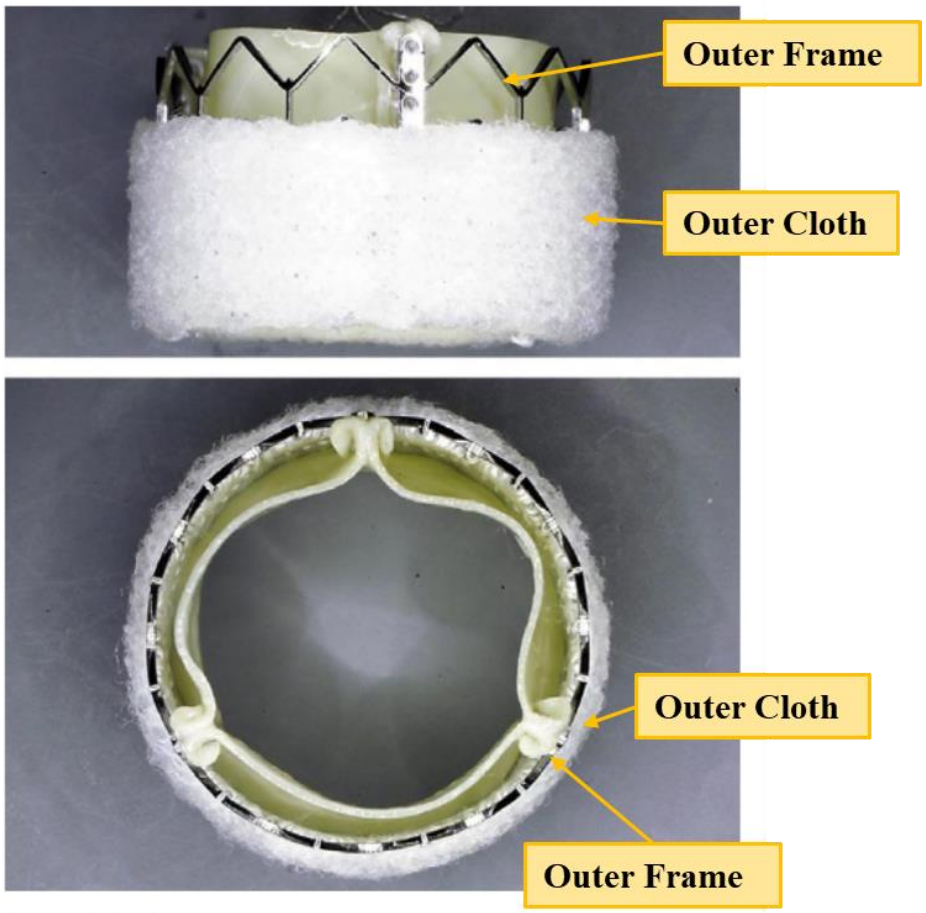

Fig. 1. Cloth valve.

(Ex. 1007, 1121, Fig. 1.) The outer cloth is formed from nonmetallic, PET fibers that extend radially outwardly of the outer frame:

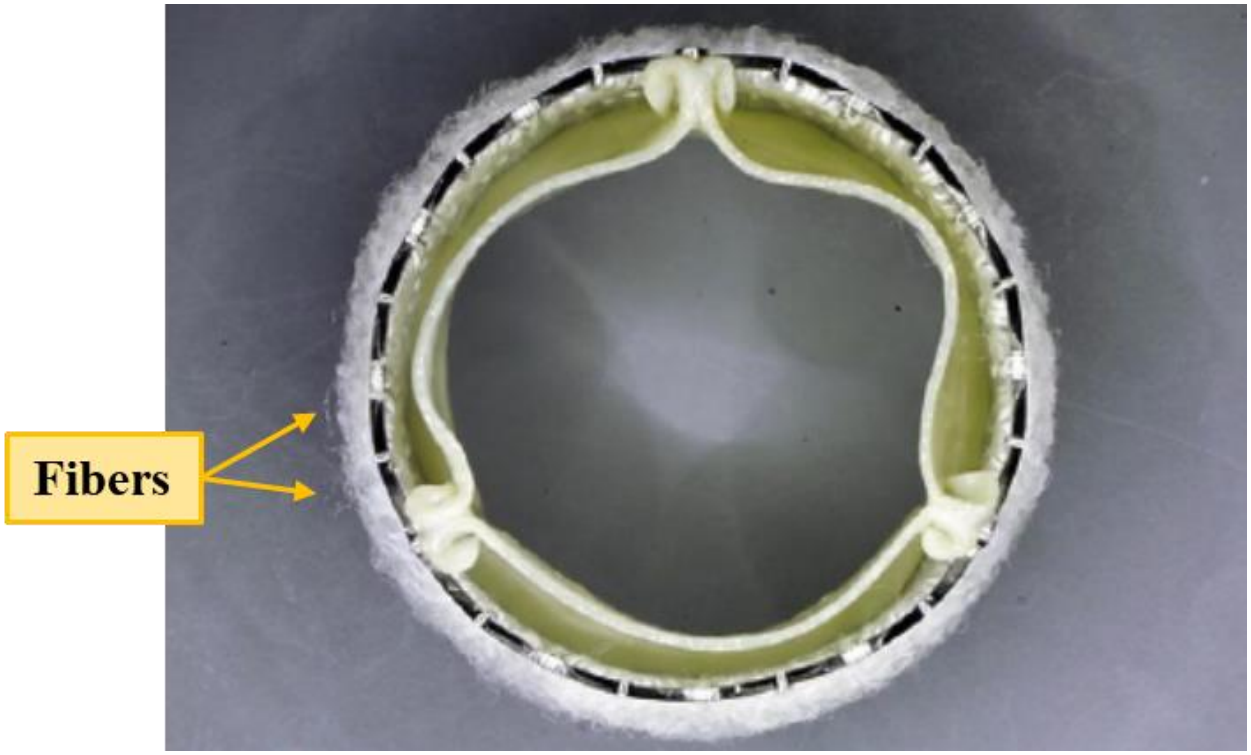

(Ex. 1007, 1121, Fig. 1 (excerpt); Ex. 1003, ¶115.) The PET fibers are the "first portion of fibers" required by claim 1. (Ex. 1003, ¶¶115-117.)

Walther's outer fibers are configured to form a sealing interface against the patient's annulus and native valve leaflets when compressed thereagainst. (*Id.*, ¶¶118-120.) Walther describes implanting the cloth-covered SAPIEN within a surgical valve. (Ex. 1007, 1120-1121.) The fibrous outer cloth "is designed to reduce paravalvular leak by creating a seal between the two valves…" by compressing the radially extending fibers against the surgical valve's annulus and leaflets:

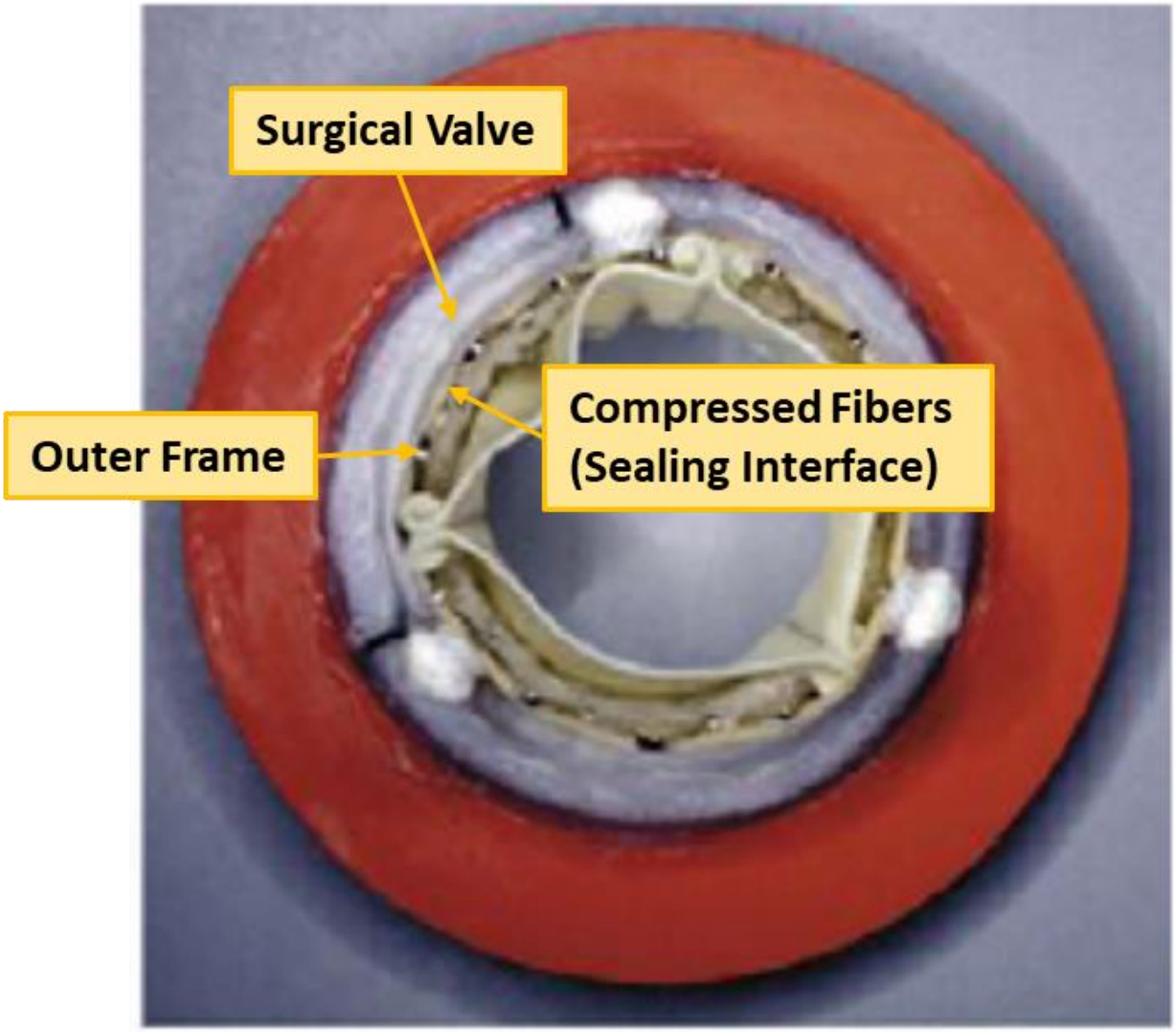

(*Id.*, 1120-1121, Fig. 2. (excerpt))

A POSITA would have understood that expanding Walther's cloth-covered SAPIEN in a patient's native aortic valve would form a first sealing interface against the annulus and native valve leaflets of the patient when the first portion of fibers is compressed thereagainst. (Ex. 1003, ¶118.) Cribier discloses that SAPIEN presses against the aortic valve's annulus and native leaflets upon implantation. Cribier

states that SAPIEN is "advanced to the native aortic valve…positioned across the aortic annulus, and delivered by balloon inflation[.]" (Ex. 1012, 347.) Cribier instructs that "before deployment, one third to half of the stented prosthesis needs to rest above the annulus and the remainder in the LVOT [left ventricular outflow tract] in order to minimize perivalvular leaks and avoid coronary occlusion." (*Id.*, 353.) Consistent with the understanding in the art, the '236 patent identifies the annulus as the point where the leaflets begin. (Ex. 1001, 1:58-60, Fig. 2; Ex. 1003, ¶119; *see also* Ex. 1047, 76 ("[T]he annulus described by surgeons is usually the semilunar crown-like structure demarcated by the hinges of the [aortic] leaflets.").) When expanded in this position, SAPIEN presses against and replaces the patient's native aortic leaflets, as illustrated below:

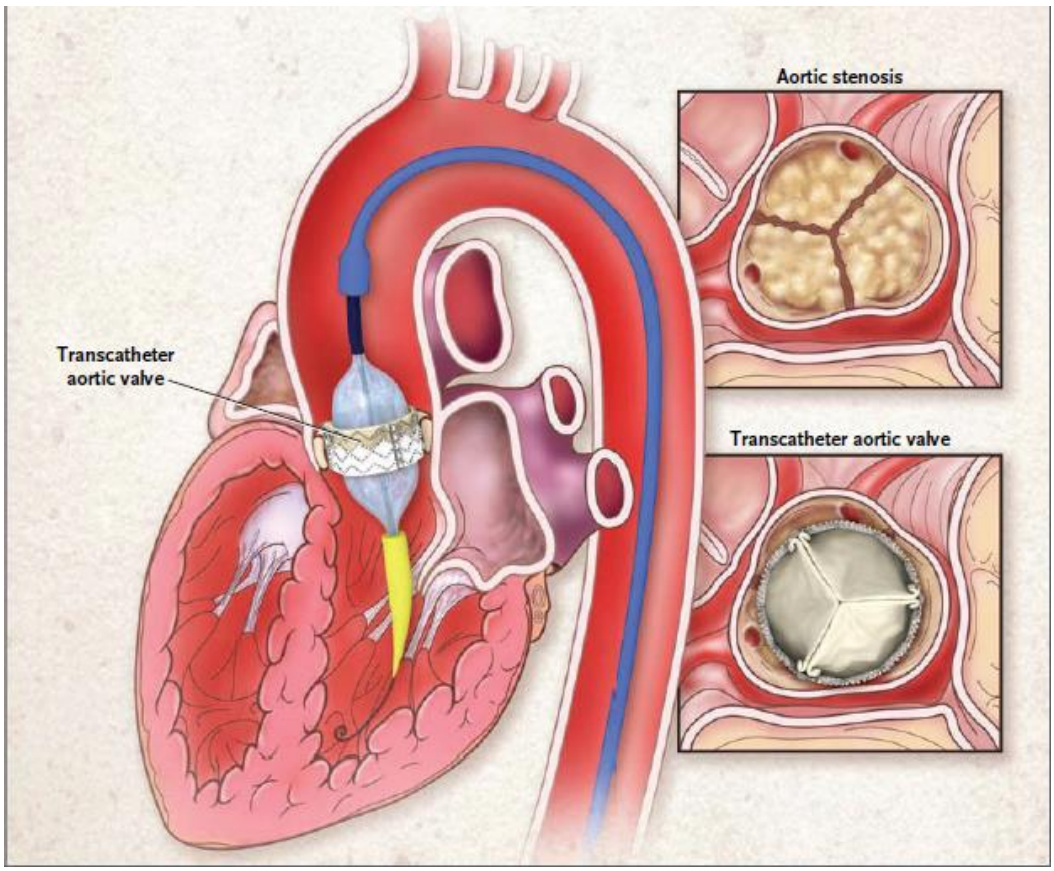

(Ex. 1022, 2189, Fig. 1; Ex. 1003, ¶119.) Some publications even describe SAPIEN as "crush[ing] the leaflets of the native valve against the wall." (Ex. 1047, 74.)

Expanding Walther's cloth-covered SAPIEN in a native aortic valve would press Walther's fibers against the patient's annulus and native leaflets to form a sealing interface. (Ex. 1003, ¶121.) Walther's outer cloth covers approximately two-thirds of SAPIEN's frame:

(Ex. 1007, Fig. 1 (excerpt).) If one-third to half the cloth-covered SAPIEN rested above the annulus and the remainder in the LVOT, the central fibers would press against the annulus and the fibers "above the annulus" would press against the leaflets:

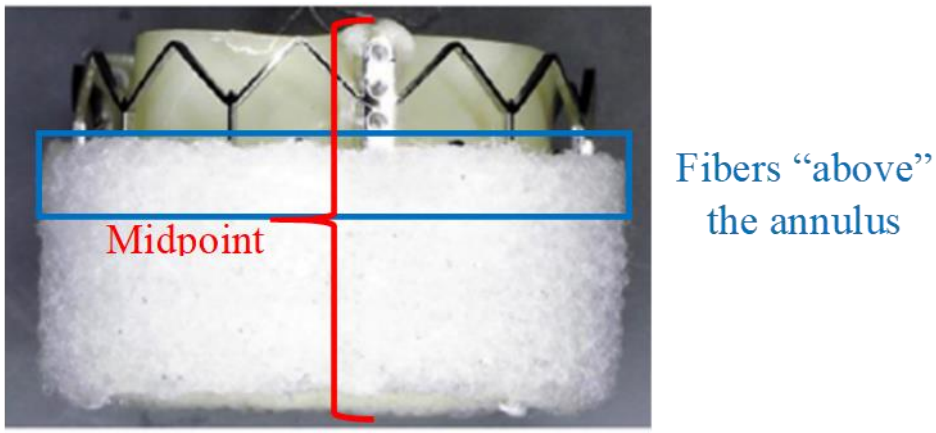

(Ex. 1003, ¶121; Ex. 1047, 74.) In fact, Patent Owner admitted during prosecution of a related patent that an outer seal covering two frame rows would press against the leaflets. (Ex. 1046, 25.)

While Walther describes expanding the cloth-covered SAPIEN in a surgical valve, POSITAs would have found it obvious to deploy the valve within a patient's native valve so that the outer cloth forms a sealing interface with the annulus and native leaflets. (Ex. 1003, ¶122.) By November 2012, POSITAs well understood that PVL could occur with SAPIEN. (*See e.g.*, Ex. 1012, 354 (describing PVL with SAPIEN; Ex. 1022, 2194 (same); Ex. 1003, ¶124.) Thus, POSITAs would have been motivated to apply Walther's known technique for reducing PVL (adding an outer cloth to SAPIEN) to a known device (SAPIEN), which was ready for improvement and, as discussed below, would yield predictable results. *See KSR Int'l Co. v. Teleflex, Inc.*, 550 U.S. 398, 416 (2007); (Ex. 1003, ¶124.)

POSITAs would have reasonably expected success in deploying the cloth-covered SAPIEN in a patient's native aortic valve. (Ex. 1003, ¶125.) Walther describes the successful balloon deployment of the cloth-covered SAPIEN and concludes that the valve "demonstrated excellent hydrodynamic performance" and that an in-patient procedure "is feasible." (Ex. 1007, 1125; Ex. 1003, ¶125.) Moreover, the surgical valves described in Walther are designed to replace and simulate the native aortic valve and POSITAs would have expected Walther's cloth-covered SAPIEN to perform similarly in either environment. (Ex. 1003, ¶125.)

Consequently, POSITAs would have reasonably expected success in implanting the cloth-covered SAPIEN within a patient's native aortic valve. (*Id.*)

f. <u>Second Portion of Fibers</u>

Cribier and Walther render obvious "a second portion of fibers carried by the outer frame that is configured to form a second sealing interface against the outer frame when the second portion of fibers is compressed thereagainst, wherein the second portion of fibers is non-metallic." (Ex. 1003, ¶¶131-134.)

Walther's outer cloth includes outwardly extending fibers (discussed in the prior section) that extend from the outward-facing surface of the cloth and inwardly facing fibers on the inward-facing surface of the cloth that form a sealing interface against the outer frame:

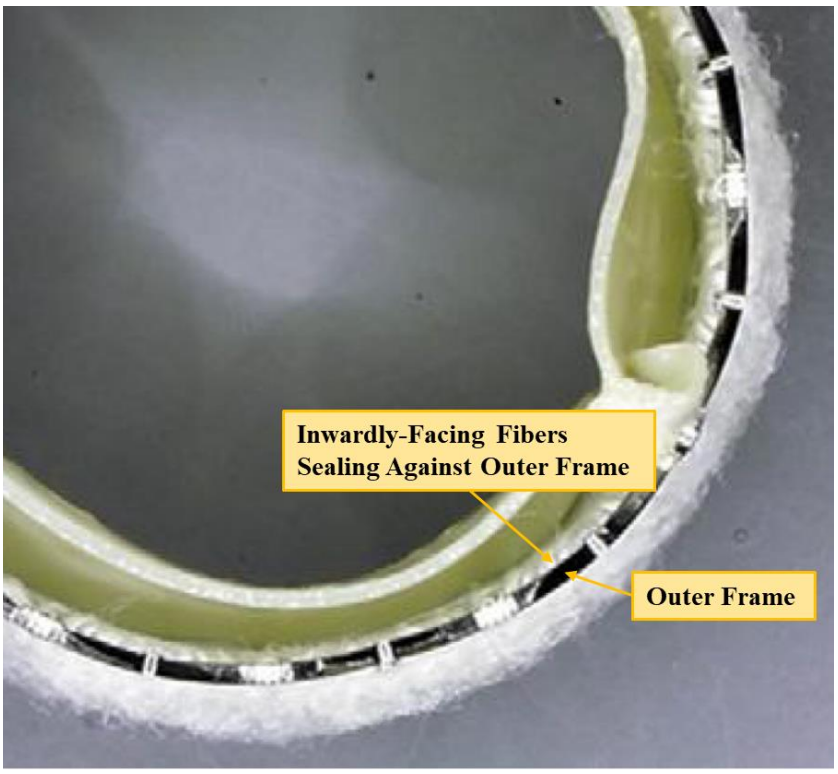

(Ex. 1007, Fig. 1 (excerpt); Ex. 1003, ¶132.) As shown above, some of the inwardly-facing fibers are pressed through the open cells of the outer frame and extend radially inwardly of the outer frame. (Ex. 1007, Fig. 1 (excerpt); Ex. 1003, ¶132.) The inwardly-facing fibers that do not pass through the open cells of the outer frame instead press against and form a sealing interface with the outer frame. (Ex. 1003, ¶132.) The inwardly-facing, nonmetallic, PET fibers are the "second portion of fibers" required by claim 1. (*Id.*)

Walther's outer cloth is "stitched onto the perimeter of each SAPIEN valve," and carried by the outer frame:

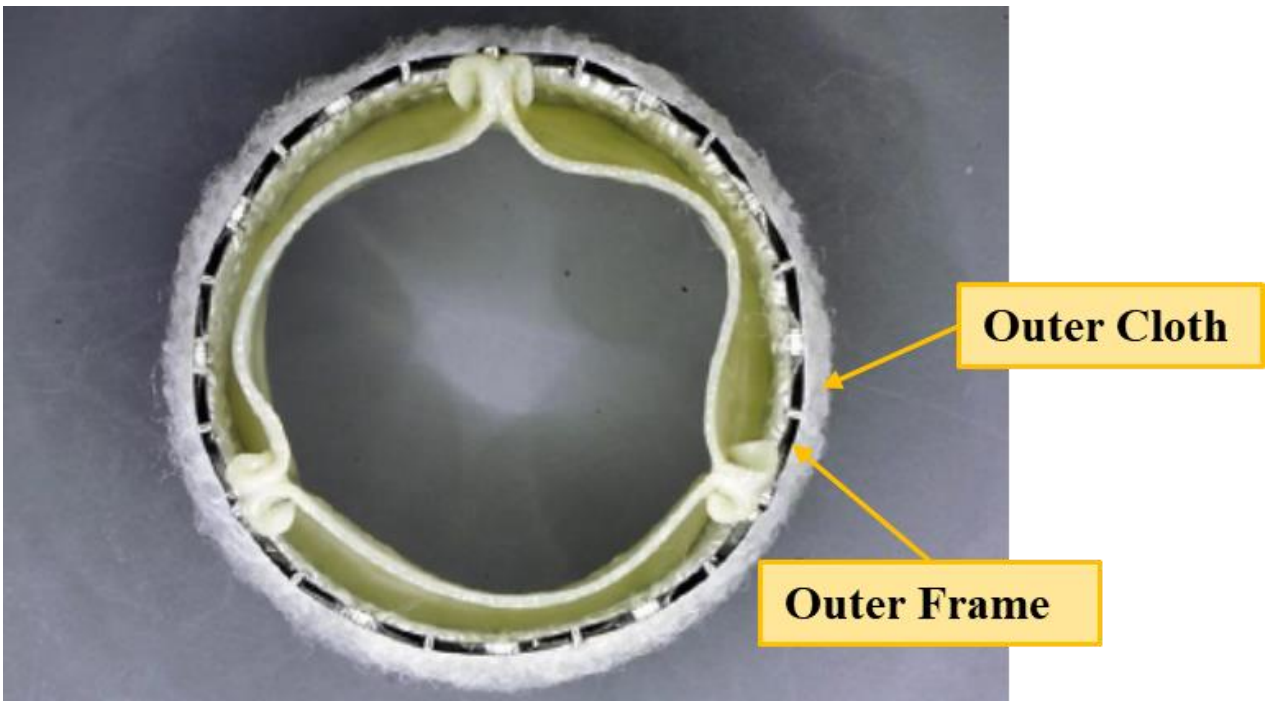

(Ex. 1007, 1121, Fig. 1 (excerpt); Ex. 1003, ¶133.) Moreover, as shown above, the inwardly-facing fibers are compressed against the outer frame and form a sealing interface with the frame when the frame is expanded. (Ex. 1003, ¶134.) The fibers must form a sealing interface with the frame in the expanded state because Walther discloses that the cloth prevents PVL, which could not happen if blood could leak between the cloth and expanded frame. (*Id.*)

g. <u>First and Second Portions in Overlapping Radial Alignment</u>

Cribier and Walther render obvious "wherein the first portion of fibers and the second portion of fibers are in overlapping radial alignment." (Ex. 1003, ¶¶135-137.)

Walther's first and second portion of fibers are interwoven and part of a single PET cloth, as illustrated in Figure 1 below, and, therefore, are in overlapping radial alignment:

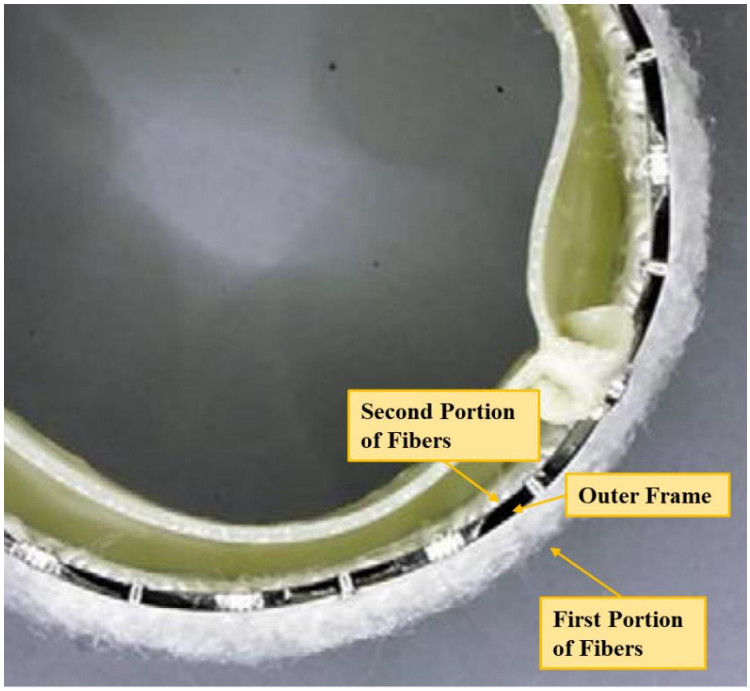

(Ex. 1007, Fig. 1; Ex. 1003, ¶¶136-137.)

h. <u>First Sealing Interface in Overlapping Radial Alignment with Leaflets</u>

Cribier and Walther render obvious "wherein the transcatheter aortic valve is configured to be positioned in a patient so that the first sealing interface is in overlapping radial alignment with native valve leaflets of the aorta to seal thereagainst." (Ex. 1003, ¶138.)

As explained in the above section "First Portion of Fibers," Walther's cloth-covered SAPIEN is configured to be positioned in a patient so that the first sealing interface is in overlapping radial alignment with native valve leaflets of the aorta to seal thereagainst. (*Supra* §VIII.A.e.) POSITAs would have been motivated, and expected success, in implanting Walther's cloth-covered SAPIEN in a patient for the reasons previously provided. (*Id.*)

i. <u>Free of an Outer Graft Covering</u>

Cribier and Walther render obvious "wherein the valve assembly is free of an outer graft covering between the first portion of fibers and the outer frame." (Ex. 1003, ¶¶139-141.)

Walther discloses that the outer cloth, which is stitched to the valve's perimeter, was the only modification made to SAPIEN. (Ex. 1007, 1120.) Walther does not state that the outer cloth includes a "graft covering" and the cloth does not include any visible graft covering:

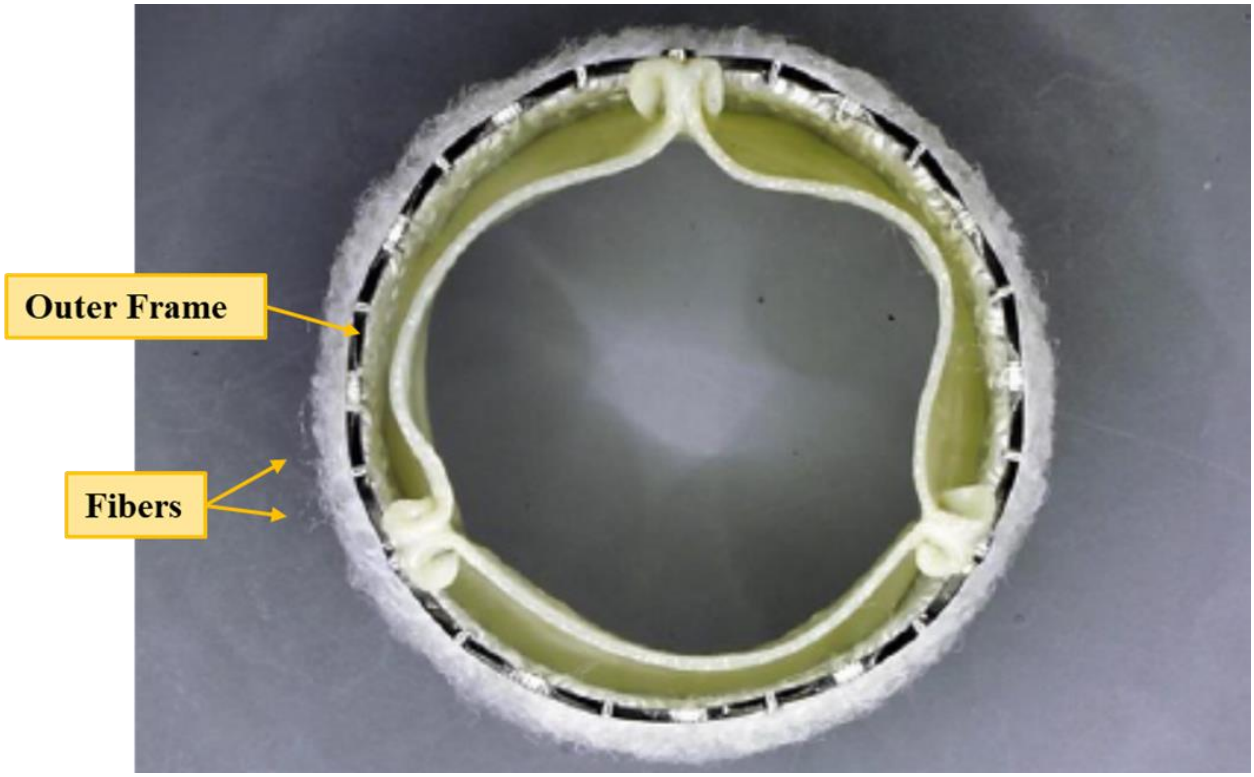

(Ex. 1007, Fig. 1 (excerpt); Ex. 1003, ¶140.) SAPIEN does not include a "graft covering" on the exterior of the frame:

Edwards SAPIEN® THV
23 mm, 26 mm

(Ex. 1012, Fig. 1; Ex. 1003, ¶140.) Thus, a POSITA would have understood that Walther's cloth-covered SAPIEN is free of an outer graft covering between the first portion of fibers and the outer frame. (Ex. 1003, ¶140.)

j. <u>Radially Compressed and Expanded Orientation</u>

Cribier and Walther disclose the claimed valve assembly that "has a radially compressed orientation and a radially expanded orientation." (Ex. 1003, ¶¶142-143.) Cribier discloses that SAPIEN is "***compressed*** using a crimping tool over the delivery balloon catheter to symmetrically reduce its overall diameter from its

expanded size to its 'mounted' size.'" (Ex. 1012, 348 (emphasis added).) Similarly, Walther discloses that the cloth-covered SAPIENs were crimped onto a balloon and then expanded within surgical valves. (Ex. 1007, 1122, Fig. 4.)

k. Balloon Expandable

Cribier and Walther disclose "wherein the valve assembly is balloon expandable to the radially expanded orientation." (Ex. 1003, ¶¶144-145.) Cribier and Walther disclose "balloon-expandable" valve assemblies. (Ex. 1012, 348; Ex. 1007, 1122.)

l. Compress Fibers to Form a Sealing Interface

Cribier and Walther render obvious "wherein expansion of the valve assembly is configured to compress the first portion of fibers and the second portion of fibers to form the respective first sealing interface and second sealing interface." (Ex. 1003, ¶¶146-147.)

As explained above, Walther's cloth-covered SAPIEN is configured, upon expansion of the valve, to (1) compress the first portion of fibers against the annulus and leaflets to form a first sealing interface upon expansion of the valve, and (2) compress the second portion of fibers against the frame to form a second sealing interface. (*Supra* §§VIII.A.1.e-f.)

2. Claim 2

Cribier and Walther render obvious the "valve assembly according to claim 1, wherein the inner graft covering extends to the proximal inflow end of the outer frame, wherein, stitching extending between the inner graft covering and through the outer frame secures the inner graft covering to the proximal inflow end of the outer frame." (Ex. 1003, ¶¶148-149.)

Cribier shows that SAPIEN's inner PET fabric cuff (i.e., inner graft covering) extends to the proximal inflow end of SAPIEN's outer frame:

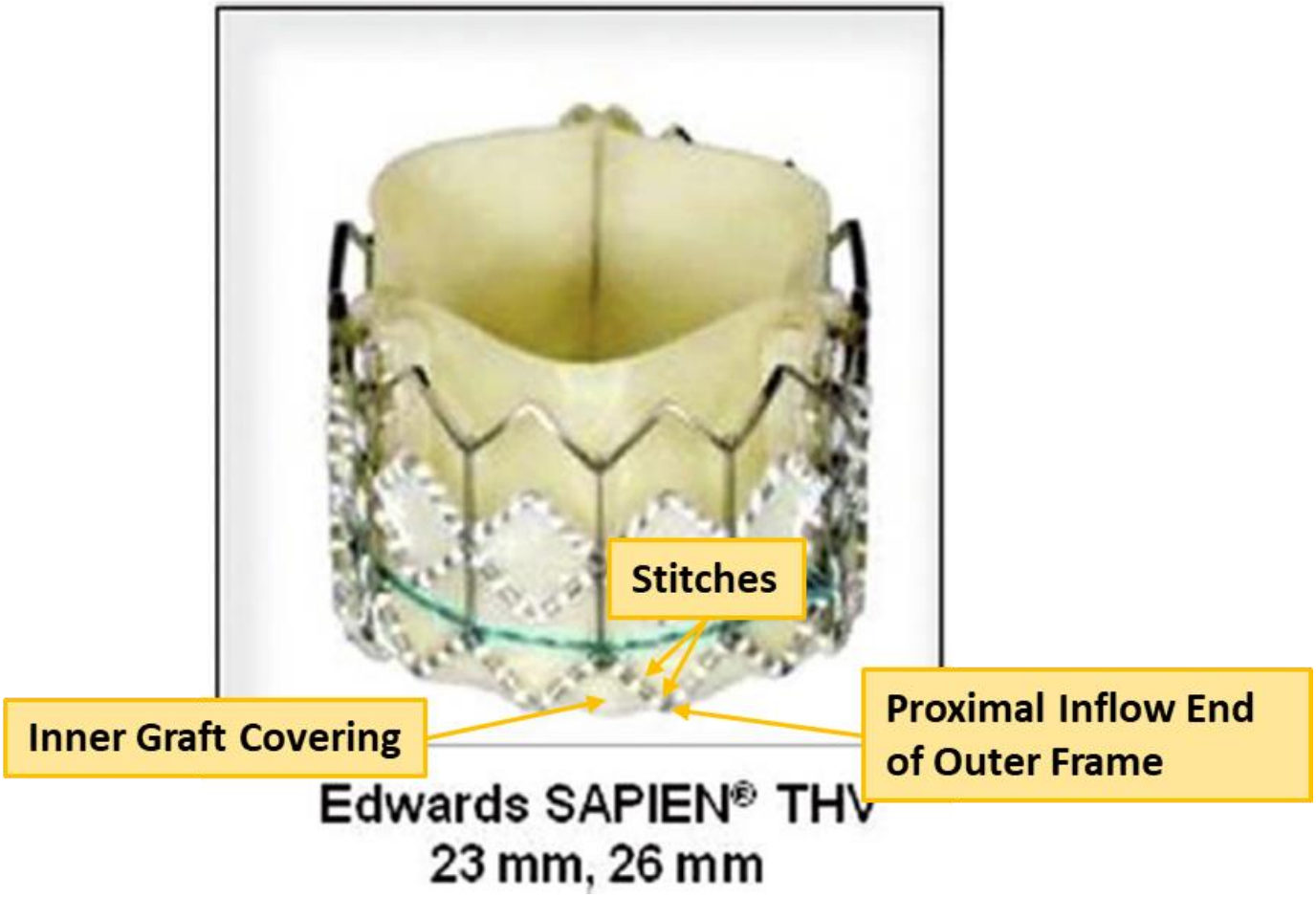

(Ex. 1012, 348, Fig. 1; Ex. 1003, ¶149.) As shown above, white stitches extend between the fabric cuff and through the outer frame to secure the fabric cuff to the proximal inflow end of the outer frame. (*See* Ex. 1012, Fig. 1; Ex. 1003, ¶149.)

3. <u>Claim 3</u>

Cribier and Walther render obvious the "valve assembly of claim 1, wherein the first portion of fibers defines an opening extending through a thickness thereof that is created by spacing formed between adjacent fibers." (Ex. 1003, ¶¶150-154.)

Walther's cloth-covered SAPIEN includes radially extending fibers (i.e., first portion of fibers). (*Supra* §VIII.A.1.e.) A POSITA would have understood that small openings inherently exist between the radially extending fibers formed by spacing between the adjacent fibers. (*See* Ex. 1007, Fig. 1; Ex. 1003, ¶152.) As shown below, the fibers are dense enough to prevent blood from flowing through the fibers, but still loose enough to create small gaps. (Ex. 1003, ¶153.) These small gaps define a plurality of "opening[s] extending through a thickness" of the radially extending fibers.

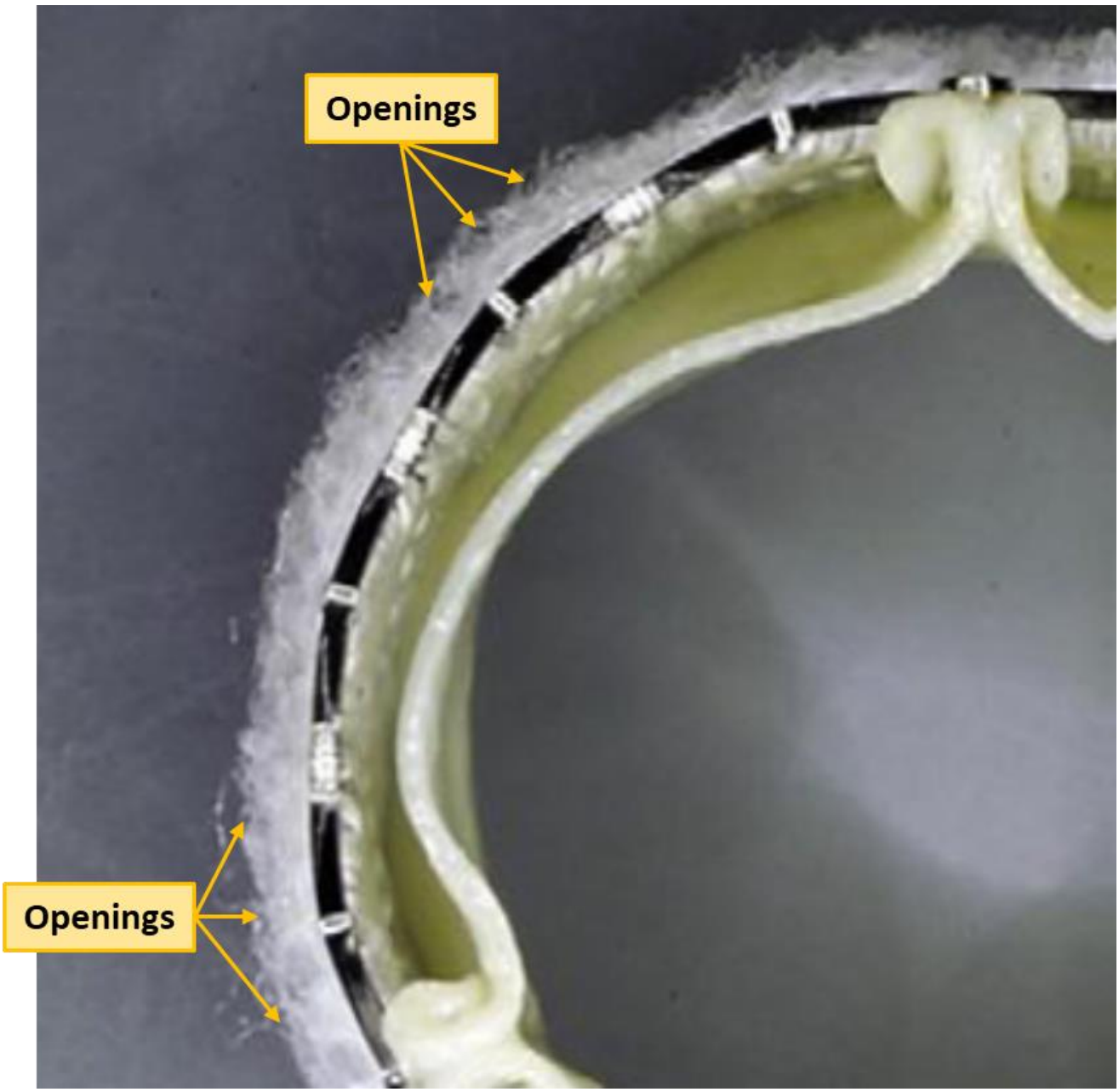

(Ex. 1007, Fig. 1 (excerpt); Ex. 1003, ¶152.)

If Walther does not disclose this limitation, a POSITA would have found it obvious to select different cloths having less density and larger gaps. (Ex. 1003, ¶154.) POSITAs would have had access to a range of suitable cloths having varying

thicknesses and densities and could have selected a cloth with a lower density of radially extending fibers such that even larger openings existed between the fibers. (*Id.*) A POSITA would have been motivated to select such a cloth to reduce the crimped profile of the device while still achieving the reduction in PVL provided by the fibers. (*Id.*)

Additionally, the ’236 patent does not claim or disclose how to size or arrange the fibers to provide such an opening. (*Id.*, ¶151.) For example, the ’236 patent never discloses the length or width of the fibers, the density of the fibers, or any particular arrangement of the fibers. (*Id.*) Consequently, Patent Owner cannot argue that the selection of materials and adaptation of the cloth-covered SAPIEN to provide such an opening would have been beyond the skill of a POSITA. *See e.g., Smith & Nephew, Inc. v. Rea*, 721 F.3d 1371, 1380-81 (Fed. Cir. 2013) (“[A] an unclaimed and undisclosed feature . . . cannot be the basis for finding [a] patent to be non-obvious over the prior art.”); *see also E.I. du Pont de Nemours & Co. v. Phillips Petroleum Co.*, 849 F.2d 1430, 1433 (Fed. Cir. 2013) (“[N]o principle of law . . . would authorize us to read into a claim an element which is not present, for the purpose of making out a case of novelty . . . ."); *TorPharm, Inc. v. Ranbaxy Pharms., Inc.*, 336 F.3d 1322, 1331 (Fed. Cir. 2003) (“[N]onobviousness is assessed by

reference to the claimed invention, and not by reference to properties that cannot ultimately be derived from the claims.”).

4. <u>Claim 4</u>

Cribier and Walther render obvious the “valve assembly of claim 1, wherein the second portion of fibers defines an opening extending through a thickness thereof that is created by spacing formed between adjacent fibers, wherein the opening extends to the outer frame.” (Ex. 1003, ¶¶155-158.)

Like Walther’s fibers on the outward-facing surface, the inwardly-facing fibers (i.e., second portion of fibers) inherently have small openings between the fibers formed by spacing between the adjacent fibers. (*See* Ex. 1007, Fig. 1; Ex. 1003, ¶157.) As explained in claim 3, the fibers are dense enough to prevent blood from flowing through the fibers, but still loose enough to create small gaps. (Ex. 1003, ¶157.)

If Walther does not disclose this limitation, a POSITA would have found it obvious to select different cloths having less density and larger gaps for the reasons provided in claim 3. (*Supra* §VIII.A.3; Ex. 1003, ¶158.)

B. Grounds 2-3: Claims 1-4 Obvious Over Spenser and Walther or Spenser II

Spenser describes heart valve assemblies similar to SAPIEN including the Figure 44a embodiment below:

FIG. 44a

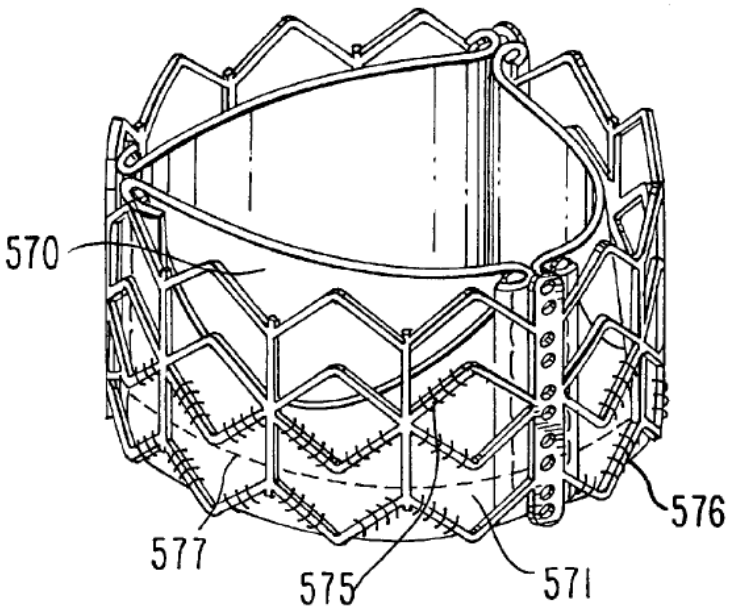

(Ex. 1010, Fig. 44a; *see also* Ex. 1040, 6 (identifying Spenser).)

Walther discloses cloth-covered SAPIENs. (*Supra* §VIII.A.1.)

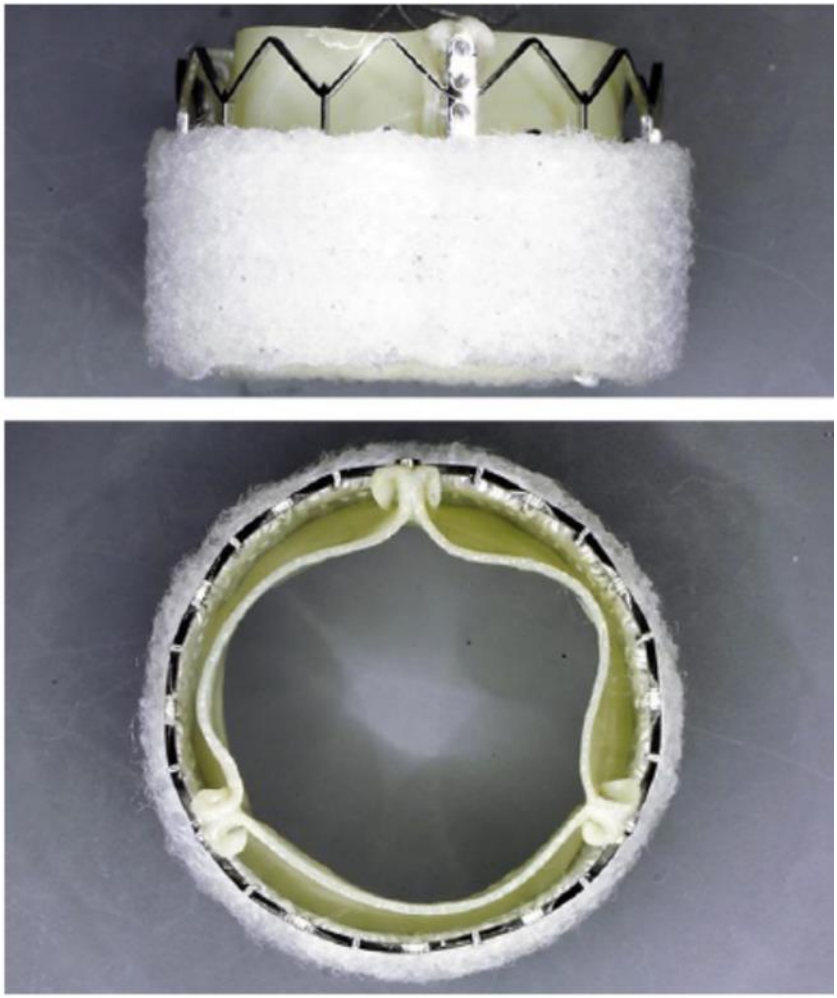

Fig. 1. Cloth valve.

Spenser II discloses heart valves having a fibrous layer of "compressible material…disposed along the outer surface of the stent structure" to reduce PVL:

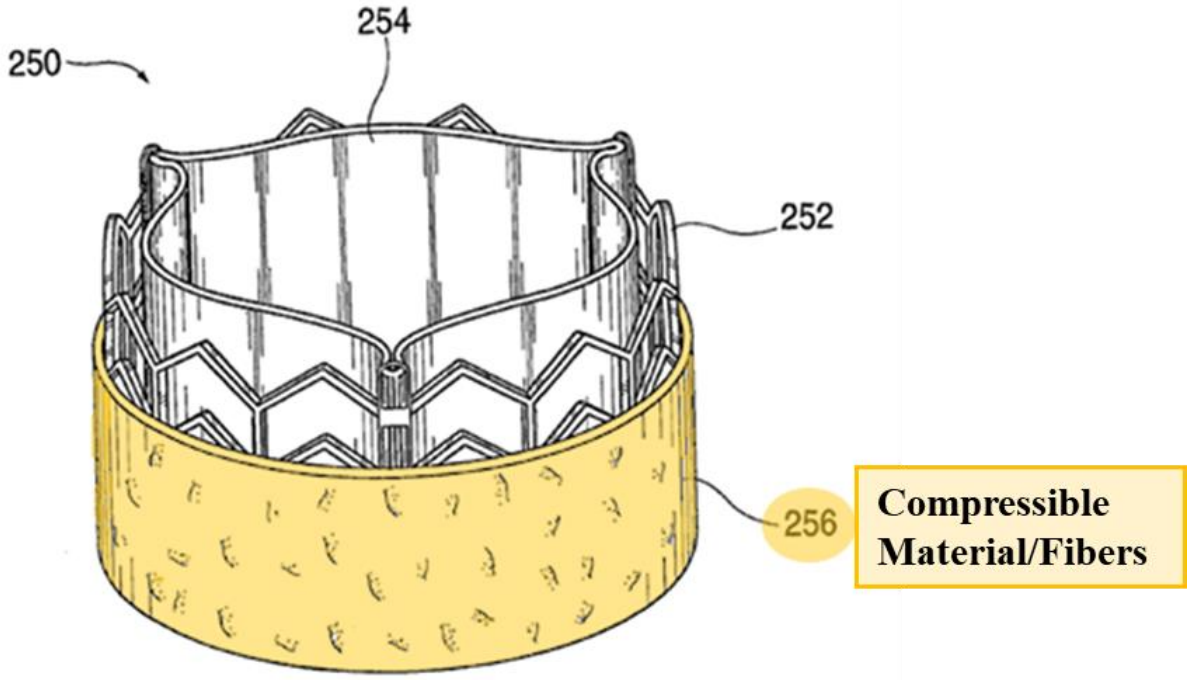

FIG. 22

(Ex. 1011, [00144]-[00145], Fig. 22.)

A POSITA would have been motivated, and found it obvious, to combine Walther's outer cloth or Spenser II's outer compressible material with Spenser's Figure 44a. (Ex. 1003, ¶163.) Thus, claims 1-4 are obvious over Spenser in combination with Walther or Spenser II. (*Id.*)

1. <u>Claim 1</u>

Spenser and Walther or Spenser II render claim 1 obvious. (Ex. 1003, ¶¶164-212.)

a. <u>Preamble</u>

Spenser discloses a "transcatheter aortic valve assembly." (Ex. 1010, 1:13-15, 2:6-12, 5:17-25, 5:65-6:3, 17:19-18:43; Ex. 1003, ¶166.).) Spenser discloses that "[a]n aspect of the present invention deals with the possibility of ***implanting the valve percutaneously***… ***via a large blood vessel such as the femoral artery***[.]" (Ex. 1010, 2:6-12 (emphases added).) Spenser describes delivering the valves through a catheter. (*Id.*, 5:17-6:36, 17:19-18:43.)

Walther and Spenser II also disclose "transcatheter aortic valve" assemblies. (*Supra* VIII.A.1.a; Ex. 1011, [0009], [0014], [0017], [0087], [00144]-[00145]; Ex. 1003 ¶167.)

b. <u>Outer Frame</u>

Spenser discloses this limitation. (Ex. 1003, ¶¶168-170.) Figure 44a illustrates "an implantable prosthetic valve" that includes "frame 575":

FIG. 44a

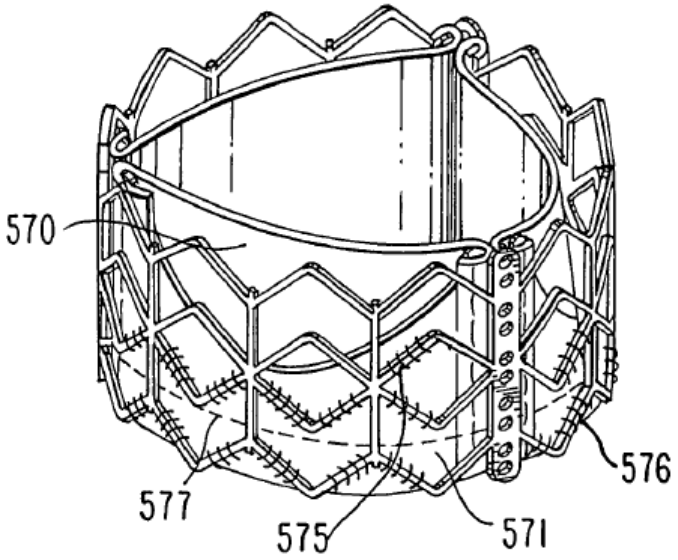

(Ex. 1010, 19:5-13, 26:30-34.) The frame may be made from metallic materials and surrounds the other valve components, making it an "outer frame." (*Id.*, 12:28-31, 28:16-19, Fig. 44a-44b; Ex. 1003, ¶170.)

c. <u>Inner Frame</u>

Spenser discloses this limitation. (Ex. 1003, ¶¶171-174.) Spenser's Figure 44a includes "additional pieces of PET" for "sealing and protecting the pericardium." (Ex. 1010, 26:30-34, Figs. 44a-44c.) The "pericardium" includes prosthetic leaflets 570, and the PET is a polymeric "graft covering." (*Id.*, 26:30-54; Ex. 1003, ¶172.)

PET 571 [blue] is positioned "between the leaflets [570 yellow] and frame [575 red]" and engages the leaflets[5]:

FIG. 44b

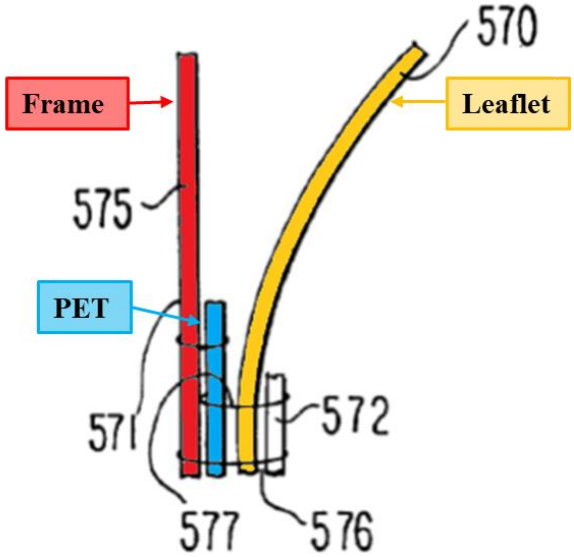

(Ex. 1010, 26:30-54, Fig. 44b.) PET 571 is "cylindrically extending" and extends radially outwardly of the prosthetic heart valve 570 and radially inwardly of the outer frame 575 for providing sealing to the heart valve:

[5] In Fig. 44b, the lead lines for 571 and 575 point to the outer frame [red]. This is a drafter's error. The lead line for the outer PET layer 571 should point to the middle layer [blue]. (Ex. 1010, 26:40-42; Ex. 1003, ¶173 n.4.)

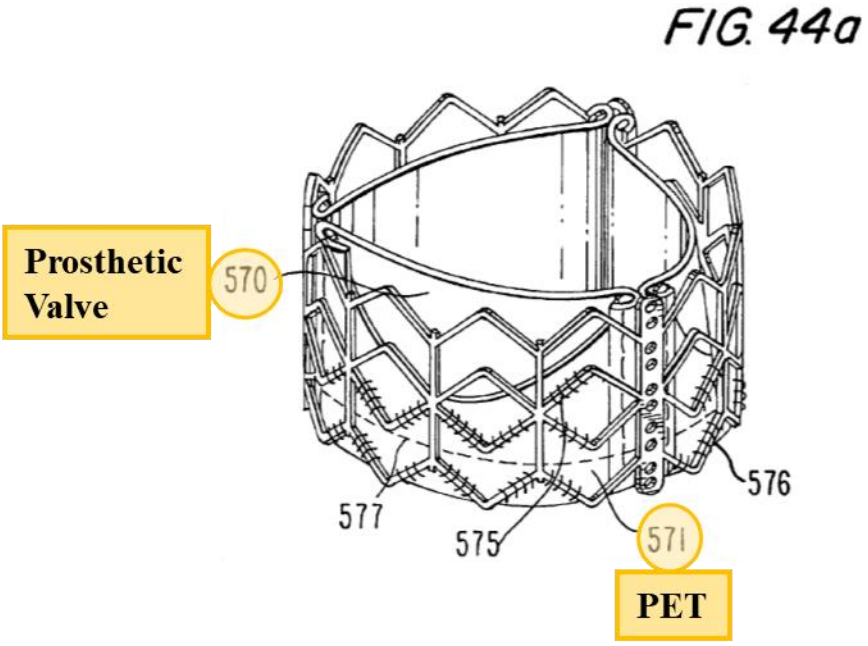

(*Id.*, 26:30-34, Fig. 44a-b.) Thus, based on Patent Owner's statements during related prosecution (*supra* §VIII.A.1.c), PET 571 satisfies the "inner frame" limitations. (Ex. 1003, ¶174.)

d. <u>Stitching</u>

Spenser discloses this limitation. (Ex. 1003, ¶¶175-177.) Spenser's inner graft covering is secured to the frame with stitches from sutures 576 and 578:

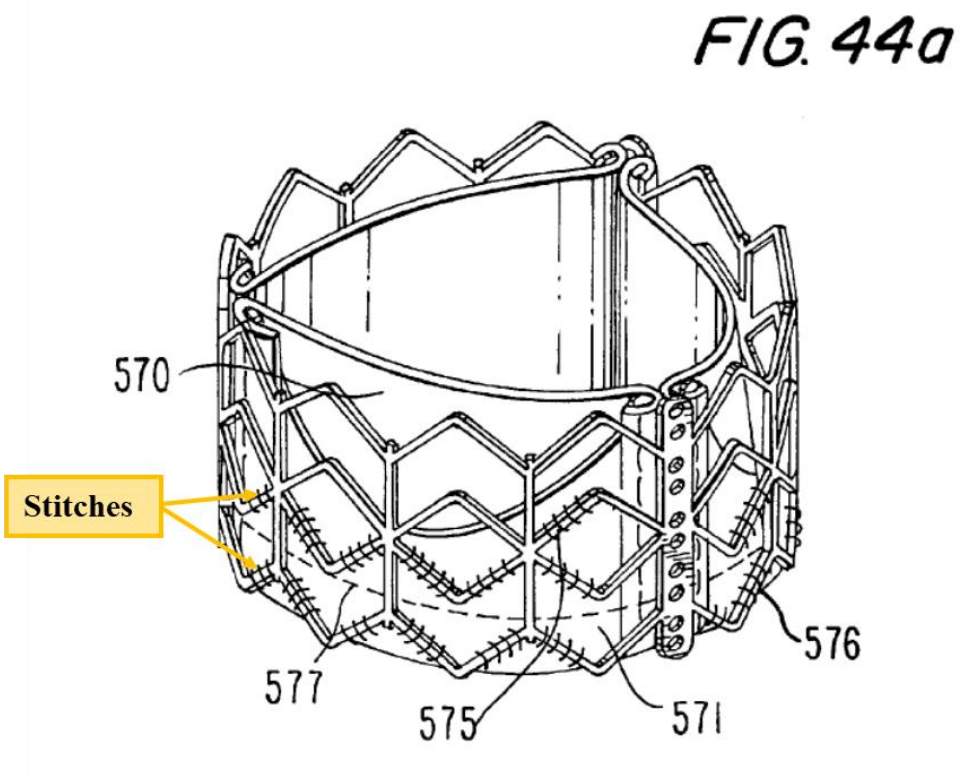

(Ex. 1010, 26:45-47, Figs. 44a-44c; *see also id.* claims 10, 30.)

e. <u>First Portion of Fibers</u>

i. <u>Walther</u>

Walther discloses this limitation as explained in Ground 1. (*Supra* §VIII.A.1.e.) A POSITA would have been motivated to combine Walther's outer cloth with Spenser's Figure 44a because Walther expressly discloses combining the outer cloth with a similar (if not identical) heart valve (SAPIEN). (Ex. 1007, 1120-1121; Ex. 1003, ¶180.) Additionally, Spenser suggests the addition of an outer cloth

to Figure 44a by disclosing a similar valve (*see* below) having an outer cuff portion 21 for sealing around the valve:

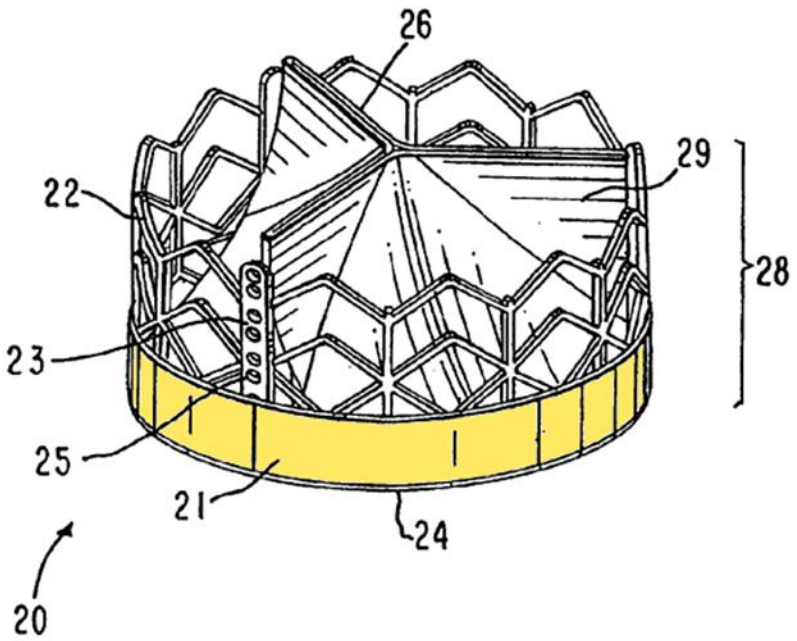

(Ex. 1010, 13:22-25, Fig. 1.) Adding Walther's outer cloth to Figure 44a would have merely entailed applying a known technique (attaching an outer cloth) to a known device (Figure 44a) ready for improvement (enhanced sealing). *KSR Int'l Co.*, 550 U.S. at 416.

A POSITA would have reasonably expected success in combining Walther's outer cloth with Figure 44a because Walther discloses how to combine the cloth with a similar heart valve, provides images of the combination, and concludes that the cloth-covered valve "demonstrated excellent hydrodynamic performance." (*See* Ex. 1007, 1125; Ex. 1003, ¶180.)

A POSITA would have understood that Walther's outer cloth is "configured to form a first sealing interface against the annulus and native valve leaflets of the patient when the first portion of fibers is compressed thereagainst" as explained in Ground 1. (*Supra* §VIII.A.1.e.) Further, like SAPIEN, Spenser's Figure 44a is configured to press against the annulus and native leaflets of the patient. (Ex. 1003, ¶181.)

Spenser's Figure 4 (below) shows the valve deployed "in a natural aortic valve position in accordance with the present invention":

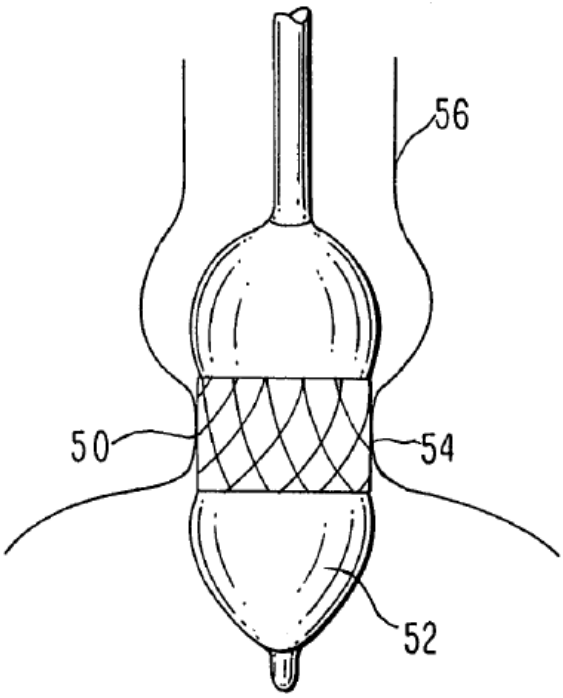

(Ex. 1010, 8:66-67, 14:15-20, Fig. 4; *see also id.*, 5:17-6:36, 17:19-18:43, Figs. 17a-17b.) As shown, the valve presses against the patient's aortic annulus. (Ex. 1003, ¶181.) Although not shown in Figure 4, POSITAs would have understood that the

valve also presses against the patient's native aortic leaflets, which are attached to the annulus and extend distally therefrom. (Ex. 1003, ¶180.)

Walther's outer cloth would cover at least the two proximal rows of Figure 44's outer frame, as illustrated by the comparison of Walther's Figure 1 (left) and Spenser's Figure 44a (right) below:

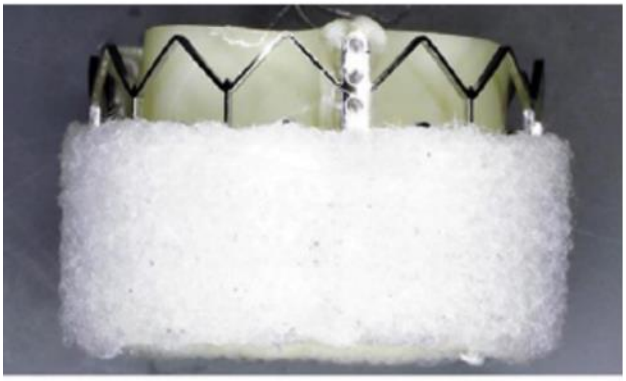

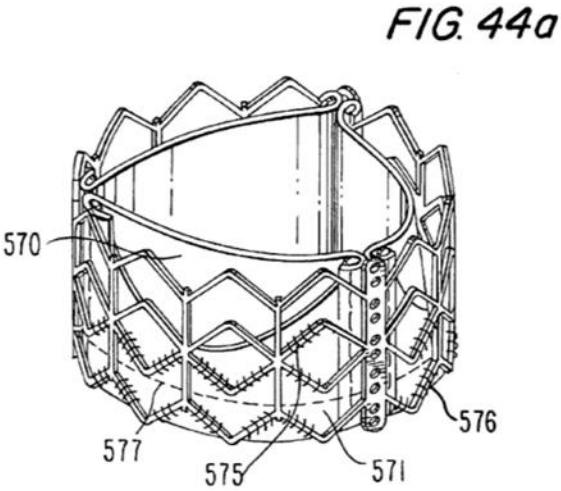

(Ex. 1007, Fig. 1; Ex. 1010, Fig. 44a; Ex. 1003, ¶182.) As illustrated by Spenser's Figure 4 and understood by a POSITA, expanding Figure 44a would cause at least a portion of the proximal two rows to press against the patient's annulus and native aortic leaflets. (Ex. 1003, ¶182.) Thus, expansion of Figure 44a would press the outwardly extending fibers of Walther's outer cloth against the patient's native annulus and aortic leaflets, forming a sealing interface thereagainst. (*Id.*)

A POSITA would have been motivated to, and expected success in, deploying the combination of Figure 44a with Walther's outer cloth in a patient's native valve

for the same reasons a POSITA would have been motivated to, and expected success in, deploying Walther's cloth-covered SAPIEN in a patent. (*Supra* §VIII.A.1.e.)

ii. <u>Spenser II</u>

Spenser II also discloses this limitation. (Ex. 1003, ¶187.) Spenser II discloses, "[t]o reduce or prevent paravalvular leakage, a layer of compressible material 256 is disposed along an outer surface of the stent structure 252":

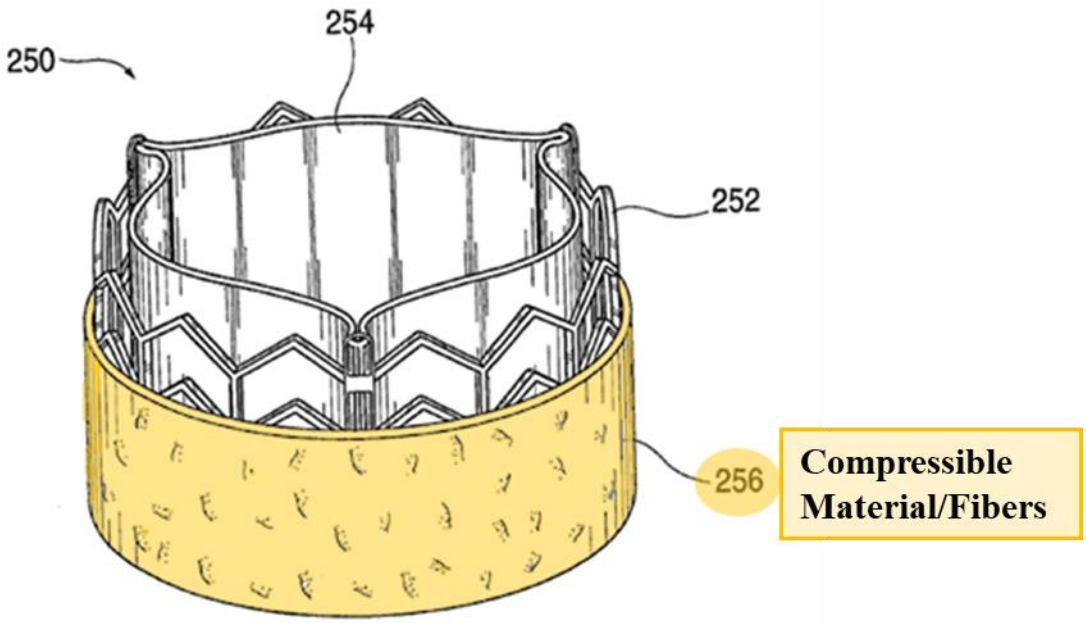

FIG. 22

(Ex. 1011, [00145], Fig. 22.) The compressible material "***may resemble a cloth or fabric having small fibers extending from the surface of the material***." (*Id.* (emphasis added).) The fibers extending outwardly from the compressible material are a "first portion of fibers" required by claim 1. (Ex. 1003, ¶187.) In a preferred

embodiment, the compressible material is formed of PET fibers, which are "non-metallic." (Ex. 1011, [00145]; Ex. 1003, ¶187.)

Spenser II's compressible material expands upon implantation in the patient's heart valve and "fills the gaps between the stented valve and the surrounding tissue," which "creates a mechanical seal that prevents paravalvular leakage." (Ex. 1011, [00145].) Thus, Spenser II's compressible material (i.e., first portion) is "configured to form a first sealing interface against the annulus and native valve leaflets of the patient when the first portion of fibers is compressed thereagainst." (Ex. 1003, ¶188.) Moreover, when added to Spenser's Figure 44a, the compressible material would cover the bottom two rows of grids formed by the frame, as shown in the below comparison of Spenser II's Figure 22 (left) and Spenser's Figure 44a (right):

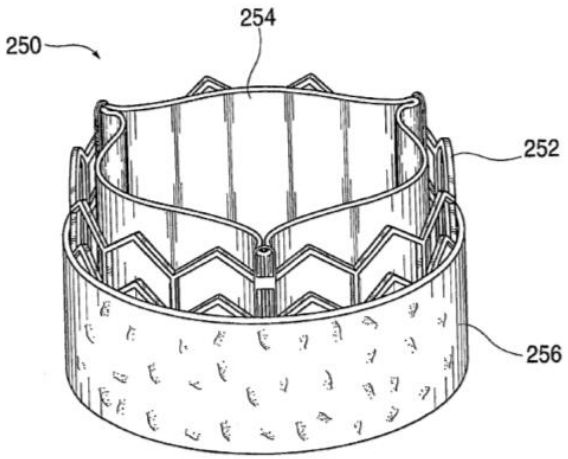

FIG. 22

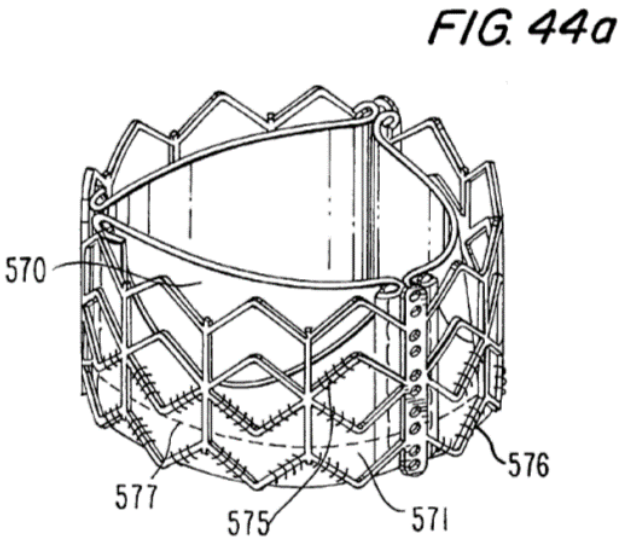

(Ex. 1010, Fig. 44a; Fig. 1011, Fig. 22; Ex. 1003, ¶188.) As explained in the preceding section, expanding Spenser's Figure 44a within a patient's native aortic valve would cause at least a portion of the proximal two rows of the frame to press against the native annulus and aortic leaflets. (*Supra* §VIII.B.1.e.i.) Thus, expansion of Figure 44a would press the outwardly extending fibers of Spenser II's compressible material against the patient's native annulus and aortic leaflets, forming a sealing interface thereagainst. (Ex. 1003, ¶188.)

A POSITA would have been motivated to combine Spenser II's compressible material with Spenser's Figure 44a for several reasons. Spenser and Spenser II describe similar valves, share three common inventors, and Spenser II explicitly references Spenser's parent application: U.S. Publication No. 2003/0153974 (Ex. 1015). (*See, e.g.*, Ex. 1010, Abstract, 2:5-15; Ex. 1011, [0001], [0009]-[0014]; Ex. 1003, ¶189.) Given this overlap, POSITAs would have reasonably anticipated that the teachings in Spenser II would apply to Spenser. (Ex. 1003, ¶189.)

Also, PVL was known to occur with SAPIEN, which is similar (if not identical) to Figure 44a. (*Id.*, ¶190.) POSITAs would have been motivated to combine Spenser II's compressible material with Figure 44a to "address leaks that can occur around the implanted valve" and "to encourage coagulation of blood to further fill the gaps and prevent leakage." (Ex. 1011, [0010], [0145]; Ex. 1003,

¶190.) Moreover, adding the compressible material to Figure 44a would have merely entailed the combination of known elements (Figure 44a and compressible material) according to known methods (stitching or otherwise attaching) to yield the predictable result of reducing PVL. *KSR*, 550 U.S. at 416; (Ex. 1003, ¶190.)

POSITAs would have reasonably expected success in combining Spenser II's compressible material with Figure 44a because the valve assemblies share many common features, including similar balloon-expandable stents and a three-leaflet prosthetic valve. (*See, e.g.*, Ex. 1010, 2:5-15; 12:28-36, 13:26-54, 19:5-13; Ex. 1011, [0011]-[0015], [00144]; Ex. 1003, ¶191.) Moreover, Spenser discloses valves having a sealing material positioned around its inlet, which would have given POSITAs confidence that other sealing structures, such as Spenser II's compressible material, could be successfully added to Spenser's valves at the inlet. (Ex. 1010, 13:22-25, Fig. 1; Ex. 1003, ¶191.)

f. <u>Second Portion of Fibers</u>

i. <u>Walther</u>

Walther discloses this limitation as explained in Ground 1. (*Supra* §VIII.A.1.f.) POSITAs would have been motivated to combine Walther's outer cloth with Spenser's Figure 44a with a reasonable expectation of success as explained in the previous section. (*Supra* §VIII.B.1.e.i.)

Walther's outer cloth is stitched to and carried by SAPIEN's outer frame. (*Supra* §VIII.A.1.f.) POSITAs would have been motivated to stitch Walther's outer cloth to Figure 44a's frame because Walther describes this method of attachment and stitching is simple and would have been known to POSITAs. (Ex. 1003, ¶194.) The combination of Walther's outer cloth with Figure 44a would therefore include a second portion of fibers "carried by the outer frame." (*Id.*) The second portion of fibers of Walther's outer cloth would be "configured to form a second sealing interface against the outer frame when the second portion of fibers is compressed thereagainst" as explained in Ground 1. (*Supra* §VIII.A.1.f.)

ii. <u>Spenser II</u>

Spenser II also discloses this limitation. (Ex. 1003, ¶195.) Spenser II's compressible material "is disposed along an outer surface of the stent structure 252" and, thus, is "carried by the outer frame":

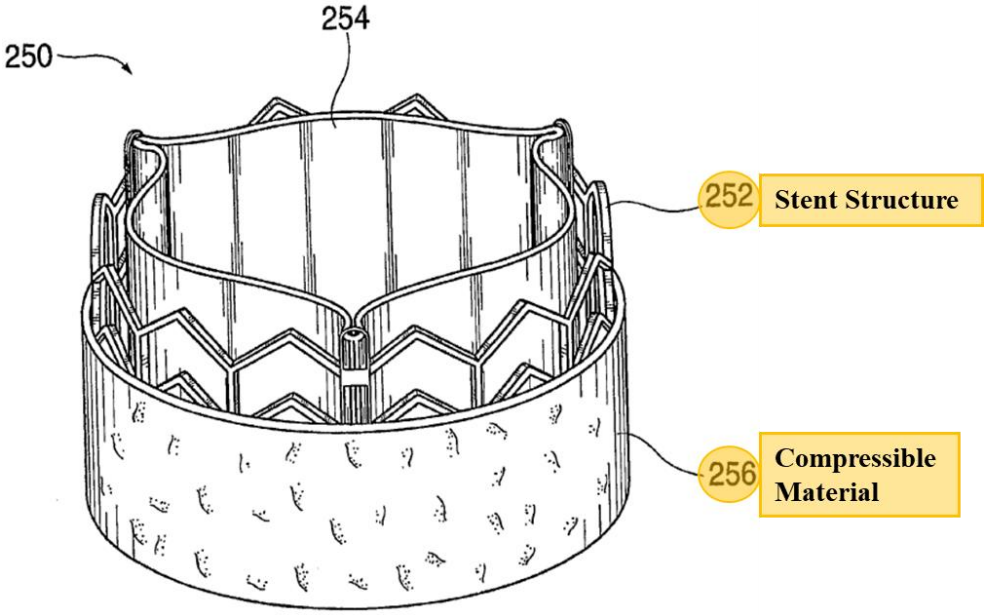

FIG. 22

(Ex. 1011, [00145], Fig.22; Ex. 1003, ¶195.) The compressible material "may resemble a [PET] cloth or fabric having small fibers extending from the surface of the material." (Ex. 1011, [00145].) The material has an outward-facing surface (i.e., a first portion), discussed in the previous section, and an inward-facing surface also formed of non-metallic fibers. (*Id.*, Fig. 22; Ex. 1003, ¶195.) The inward-facing fibers are the "second portion of fibers" required by claim 1. As shown in Figure 22 above, the inwardly-facing fibers are compressed against the outer frame and form a sealing interface with the frame when the frame is expanded. (Ex. 1003, ¶195.) The fibers must form a sealing interface with the frame in the expanded state because Spenser II discloses that the cloth prevents PVL, which could not happen if blood could leak between the cloth and expanded frame. (*Id.*)

g. First and Second Portions in Overlapping Radial Alignment

i. Walther

Walther discloses this limitation as explained in Ground 1. (*Supra* §VIII.A.1.g.)

ii. Spenser II

Spenser II also discloses this limitation. (Ex. 1003, ¶198.) Spenser II discloses that its compressible material "may resemble a [PET] cloth or fabric having small fibers extending from the surface of the material." (Ex. 1011, [00145].) As explained above, a POSITA would understand that such a PET cloth or fabric would include fibers on both its outward-facing surface (a first portion) and on its inward-facing surface (a second portion). (*Supra* §VIII.B.1.e-f.) Because the two portions of fibers are part of a single PET cloth disposed along the exterior of the outer frame, a POSITA would understand that the two portions of fibers, located on opposite surfaces of the compressible material, are in overlapping radial alignment. (Ex. 1003, ¶198.)

h. First Sealing Interface in Overlapping Radial Alignment with Leaflets

Spenser and Walther or Spenser II render this limitation obvious. (Ex. 1003, ¶¶199-201.)

As explained in the "First Portion of Fibers" section, Walther's outer cloth and Spenser II's compressible material, in combination with Spenser's Figure 44a, are configured to be positioned in a patient so that the first sealing interface is in overlapping radial alignment with native valve leaflets of the aorta to seal thereagainst. (*Supra* §VIII.B.1.e.) A POSITA would have been motivated, and expected success, in combining Walther's outer cloth or Spenser II's compressible material with Figure 44a for the reasons previously provided. (*Id.*)

i. <u>Free of an Outer Graft Covering</u>

Spenser and Walther or Spenser II render this limitation obvious. (Ex. 1003, ¶¶202-206.)

i. <u>Walther</u>

Walther's outer cloth is "free of an outer graft covering between the first portion of fibers and the outer frame." (*Supra* §VIII.A.1.i.) Likewise, Spenser's Figure 44a does not include any "outer graft covering" on the exterior of the outer frame 575:

FIG. 44a

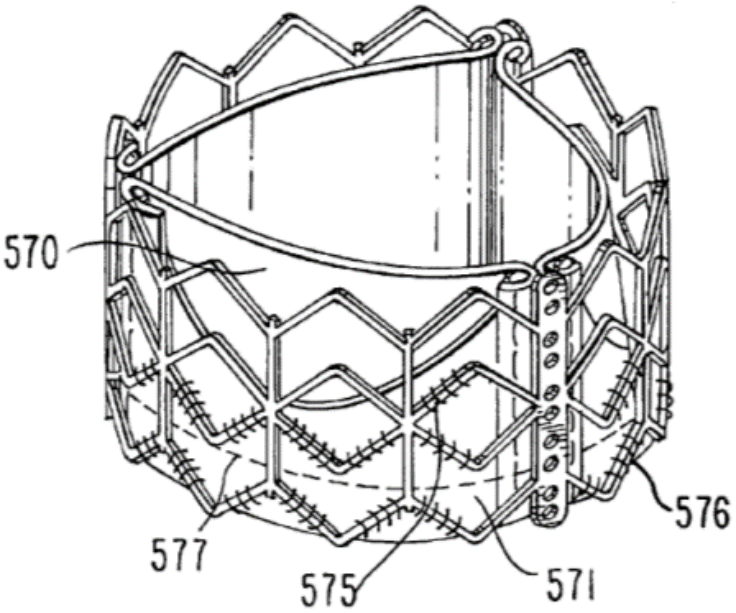

(Ex. 1010, Fig. 44a; Ex. 1003, ¶203.) Therefore, the combination of Walther's outer cloth with Figure 44a would have no "outer graft covering" between the outer cloth's first portion of fibers and the outer frame. (Ex. 1003, ¶203.)

ii. <u>Spenser II</u>

Spenser II's compressible material is "free of an outer graft covering between the first portion of fibers and the outer frame." (*Id.*, ¶205.) Spenser II discloses that the compressible material, which "may resemble a cloth or fabric having small fibers extending from the surface of the material," is "disposed along an outer surface" of the stent. (Ex. 1011, [00145].) Spenser II does not disclose or suggest any "outer graft covering" between the outwardly extending fibers of the outward-facing

surface of the compressible material (i.e., first portion) and the stent. (Ex. 1003, ¶205.) Therefore, a POSITA would understand that there is no such "outer graft covering" between the fibers of the compressible material and the outer frame. (*Id.*) Moreover, Spenser's Figure 44a does not include any "outer graft covering" on the exterior of the outer frame 575. (*Supra* §VIII.B.1.i.i.) Therefore, the combination of Spenser II's compressible material with Figure 44a would have no "outer graft covering" between the compressible material's first portion of fibers and the outer frame. (Ex. 1003, ¶205.)

j. <u>Radially Compressed and Expanded Orientation</u>

Spenser, Walther, and Spenser II disclose this limitation. (Ex. 1003, ¶¶207-208.) Walther discloses this limitation as explained in Ground 1. (*Supra* §VIII.A.1.j.) Spenser teaches that its prosthetic valve "has the ability to change its diameter from about 4 mm [compressed orientation] to about 25 mm [expanded orientation]." (Ex. 1010, 27:67-28:2.) Spenser II discloses valves that comprise "an expandable stent structure" that may be "adapted for radial expansion using a balloon catheter." (Ex. 1011, [00144].)

k. <u>Balloon Expandable</u>

Spenser and Walther or Spenser II render this limitation obvious. (Ex. 1003, ¶¶209-210.)

Spenser discloses that the valve assembly depicted in Figure 44a "resembles the valve shown in Fig. 43." (Ex. 1010, 26:34-35.) The valve shown in Figure 43 may be "inflated by a balloon . . . [such that] the frame is expanded to the full diameter." (*Id.*, 1010, 26:19-22; *see also id.*, 12:4-8, 14:10-14, 17:19-18:43 (balloon-expandable assemblies).) A POSITA would therefore have understood that Figure 44a is balloon expandable. (Ex. 1003, ¶210.) A POSITA would have further understood that Figure 44a would remain balloon expandable after adding either Walther's outer cloth or Spenser II's outer compressible material, as both references explicitly disclose that the outer cloth/compressible material may be added to a balloon-expandable valve. (*See* Ex. 1007, 1122 (cloth-covered SAPIEN was balloon expandable); Ex. 1011, [00144] (valve "adapted for radial expansion using a balloon catheter").)

l. <u>Compress Fibers to Form a Sealing Interface</u>

i. <u>Walther</u>

As explained in Ground 1, Walther's cloth-covered SAPIEN is configured, upon expansion of the valve, to (1) compress the first portion of fibers against the annulus and leaflets to form a first sealing interface upon expansion of the valve, and (2) compress the second portion of fibers against the frame to form a second sealing interface. (*Supra* §§VIII.A.1.e-f.) Walther's outer cloth would behave in the same

way if it were added to Figure 44a because Figure 44a and SAPIEN are similar, if not identical. (Ex. 1003, ¶212.)

ii. <u>Spenser II</u>

As explained above, Spenser II's compressible material, in combination with Spenser's Figure 44a, is configured, upon expansion of the valve, to (1) compress the first portion of fibers against the annulus and leaflets to form a first sealing interface upon expansion of the valve, and (2) compress the second portion of fibers against the frame to form a second sealing interface. (*Supra* §§VIII.B.1.e-f.)

2. <u>Claim 2</u>

Spenser discloses this limitation. (Ex. 1003, ¶¶214-215.) Spenser discloses that a "[b]ottom attachment suture 576, connects the three layers, the leaflet and both PET layers [571, 572] to the frame and forms a strong sealing line." (Ex. 1010, 26:45-47, Figs. 44a-44c; *see also id.* claims 10, 30.)

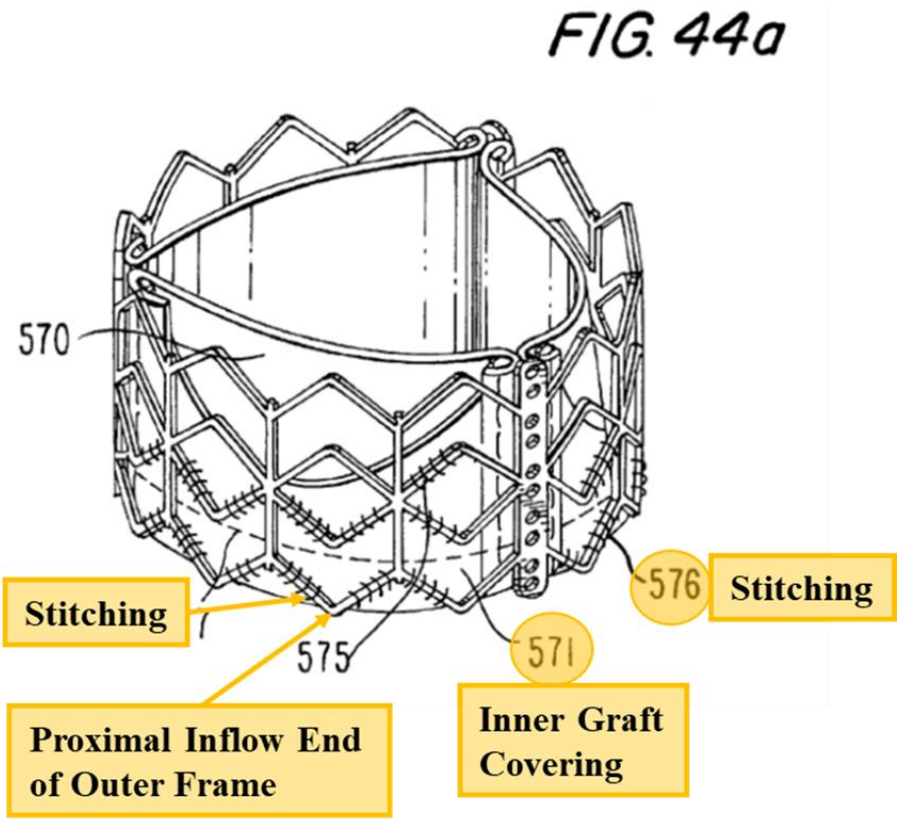

Figures 44a (above) and 44b (below) illustrate that PET 571 (i.e., inner graft covering) extends to the proximal inflow end of the outer frame, and that bottom sutures 576 extend between PET 571 and through the outer frame to secure PET 571 to the proximal inflow end of the outer frame:

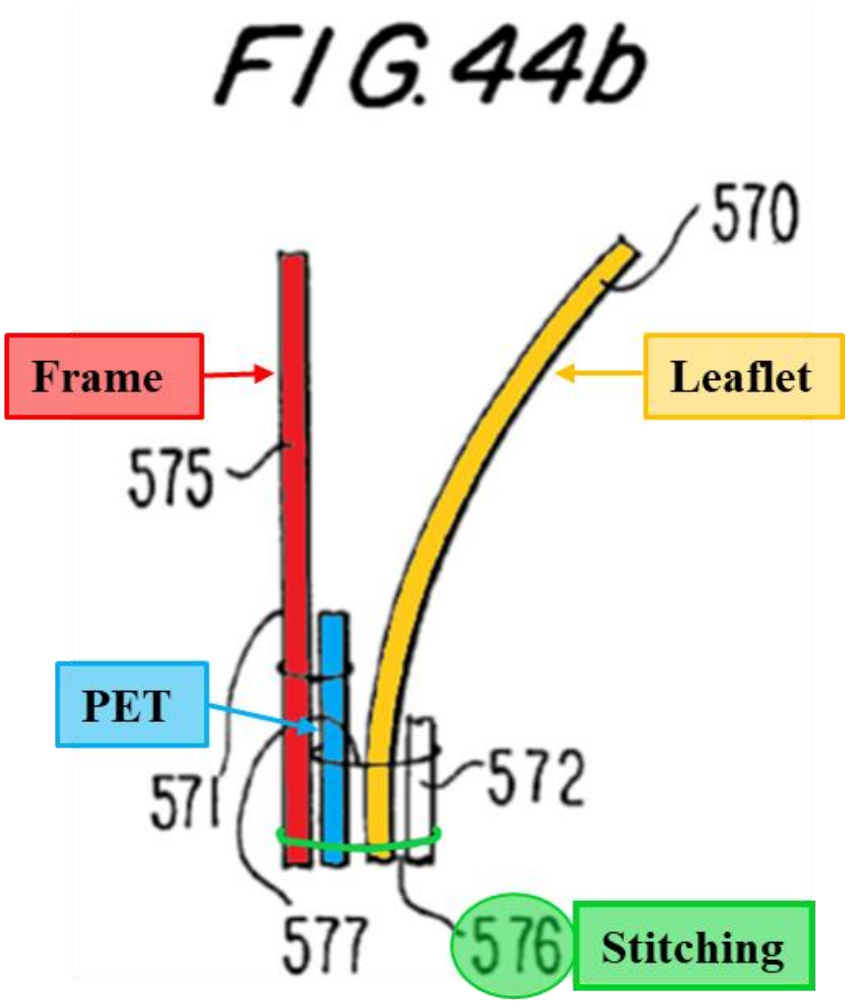

(*Id.*, Figs. 44a, 44b; Ex. 1003, ¶215.)

3. <u>Claim 3</u>

Spenser and Walther or Spenser II render this claim obvious. (Ex. 1003, ¶¶216-219.)

a. <u>Walther</u>

Walther's outer cloth discloses this limitation, or renders it obvious, as explained in Ground 1. (*Supra* §VIII.A.3.)

b. <u>Spenser II</u>

Spenser II also discloses this limitation or renders it obvious. (Ex. 1003, ¶218.) Spenser II discloses that the compressible material "may resemble a cloth or fabric having small fibers extending from the surface of the material." (Ex. 1011, [00145].) A POSITA would have understood that small openings inherently exist between the radially extending fibers formed by spacing between the adjacent fibers. (*See* Ex. 1007, Fig. 1; Ex. 1003, ¶218.) These small openings define a plurality of "opening[s] extending through a thickness" of the radially extending fibers.

If Spenser II does not disclose this limitation, a POSITA would have found it obvious to select different cloths having less density and larger gaps. (Ex. 1003, ¶219.) POSITAs would have had access to a range of suitable cloths having varying thicknesses and densities and could have selected a cloth with a lower density of extending fibers such that even larger openings existed between the fibers. (*Id.*) A POSITA would have been motivated to select such a cloth to reduce the crimped profile of the device while still achieving the reduction in paravalvular leakage and coagulation of blood provided by the fibers. (*Id.*) In addition, as explained in Ground 1, the '236 patent does not contain any disclosure regarding how to size or arrange the fibers to provide such an opening. (*Supra* §VIII.A.3.) Consequently, Patent

Owner cannot argue that the adaption of Walther's outer cloth to provide such an opening would have been beyond the skill of a POSITA. (*Id.*)

4. Claim 4

Spenser and Walther or Spenser II render this claim obvious. (Ex. 1003, ¶¶220-223.)

i. Walther

Walther discloses this limitation, or renders it obvious, as explained in Ground 1. (*Supra* §VIII.A.4.)

ii. Spenser II

Spenser II also discloses this limitation or renders it obvious. (Ex. 1003, ¶222.) Like Spenser II's outwardly extending fibers, the inwardly-facing fibers (i.e., second portion of fibers) inherently have small openings between the fibers formed by spacing between the adjacent fibers. (Ex. 1003, ¶222.) As explained in claim 3, the fibers are dense enough to prevent blood from flowing through the fibers, but still loose enough to create small gaps. (*Id.*)

If Spenser II does not disclose this limitation, a POSITA would have found it obvious to select different cloths having less density and larger gaps for the reasons provided in claim 3. (*Supra* §VIII.B.3; Ex. 1003, ¶223.)

C. Grounds 4-7: Claims 1-4 Anticipated or Obvious in View Levi Alone or With Walther or Spenser II

Levi discloses a valve having an outer skirt of woven PET fabric secured to the exterior surface of an outer frame. (Ex. 1008, 13:50-66.)

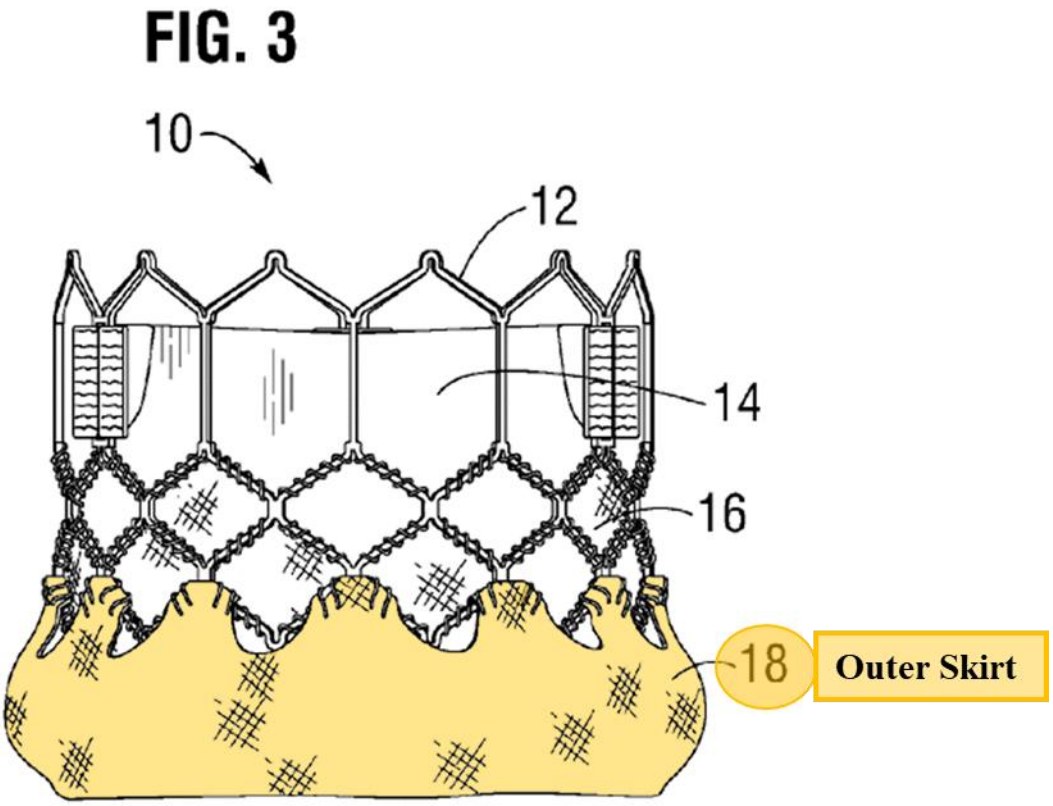

(*Id.*, Fig. 3.) Levi discloses or suggests every limitation of claims 1-4 and anticipates the claims or renders them obvious. However, if Levi does not disclose or suggest first and second portions of fibers, Walther and Spenser II do. A POSITA would have found it obvious to substitute Walther's outer cloth or Spenser II's

compressible material for Levi's outer skirt. (Ex. 1003, ¶225.) Therefore, Levi combined with Walther or Spenser II renders claims 1-4 obvious. (*Id.*)

1. Claim 1

Levi anticipates claim 1 or renders it obvious alone or with Walther or Spenser II. (Ex. 1003, ¶¶226-274.)

a. Preamble

Levi discloses a "transcatheter aortic valve assembly." (Ex. 1008, 1:16-18, 5:52-56; Ex. 1003, ¶228.) Levi discloses "collapsible transcatheter heart valves [which] can be percutaneously introduced in a compressed state on a catheter and expanded in the desired position by balloon inflation or by utilization of a self-expanding frame or stent." (Ex. 1008, 1:57-2:7; *see also id.*, 5:53-56, 6:46-49, 7:10-12, 14:60-64; Ex. 1051, 5:14-67, 28:37-48, Fig. 4.)

b. Outer Frame

Levi discloses this limitation. (Ex. 1003, ¶¶229-230.) Levi discloses an expandable metal frame that surrounds the other valve components, making it an "outer frame":

FIG. 11

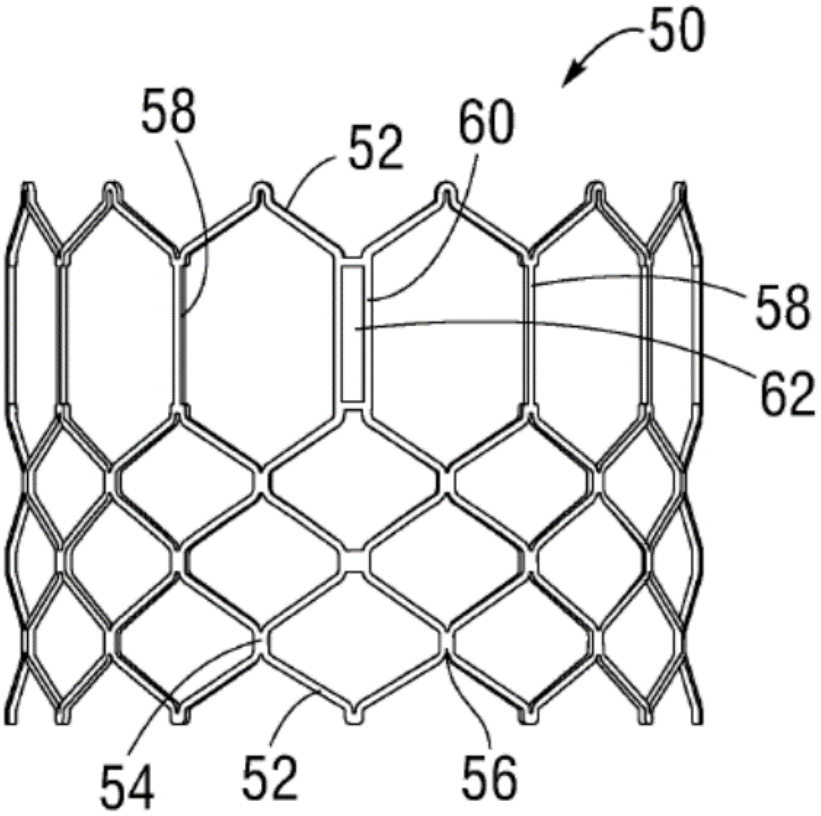

(Ex. 1008, 6:17-24, Fig. 11; Ex. 1003, ¶230.)

c. <u>Inner Frame</u>

Levi discloses this limitation. (Ex. 1003, ¶¶231-232.) Levi discloses an "inner skirt 16 … to assist in forming a good seal between the valve and the native annulus by blocking the flow of blood through the open cells of frame 12 below the lower edge of the leaflets." (Ex. 1008, 9:7-11.) The inner skirt is constructed of "a tough, tear resistant material such as polyethylene terephthalate (PET)." (*Id.*, 9:11-16.) PET

is a "polymeric graft covering." (Ex. 1003, ¶232.) The inner skirt is engaged to the valvular structure "via one or more thin PET reinforcing strips." (Ex. 1008, 9:25-29.) The "valvular structure 14 can comprise three leaflets 40, collectively forming a leaflet structure." (Ex. 1008, 5:59-62, Fig. 2.) The leaflets of the valvular structure are "prosthetic leaflets." (Ex. 1003, ¶ 232.) Levi's inner skirt 16 [yellow] cylindrically extends at least partially radially outwardly of prosthetic valvular structure 14 [blue] and radially inwardly of the outer frame 12 [red]:

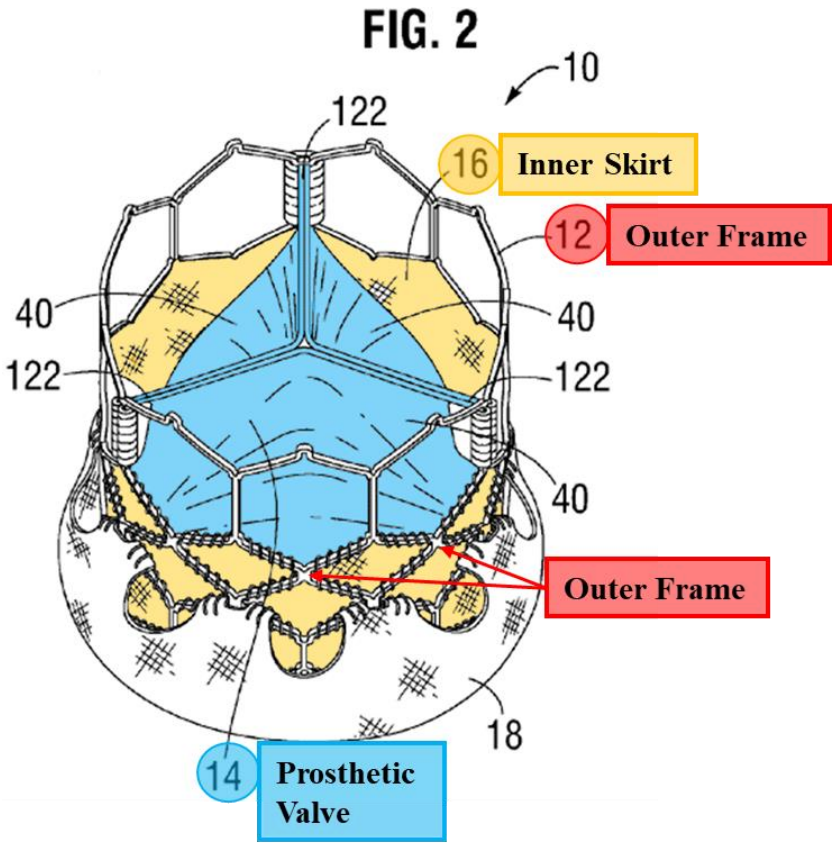

(Ex. 1008, Fig. 2; Ex. 1003, ¶232.)

d. <u>Stitching</u>

Levi discloses this limitation. (Ex. 1003, ¶¶233-234.) Levi's inner skirt 16 is secured to the outer frame 12 via a plurality of sutures 70:

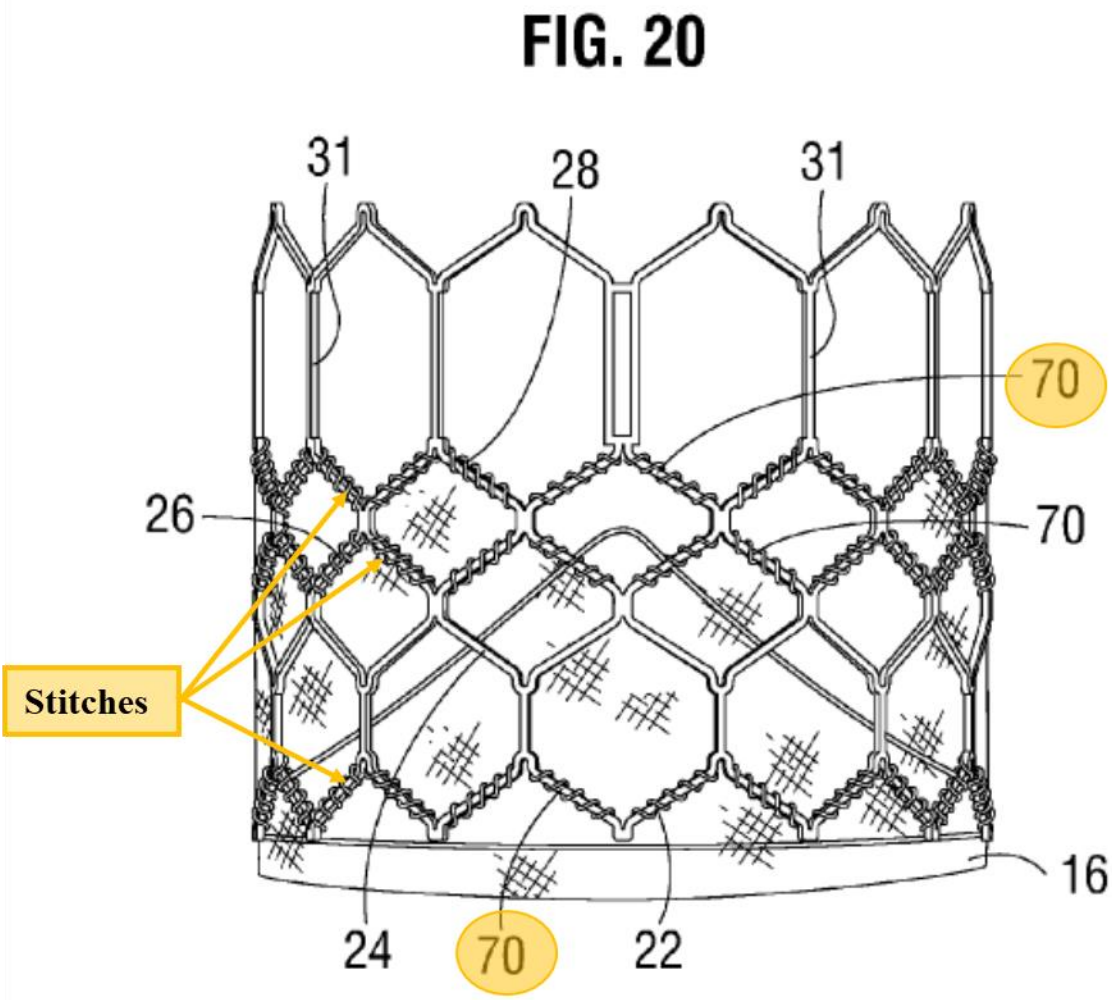

(Ex. 1008, 9:24-25, 10:11-30, Figs. 20, 39.)

e. **First Portion of Fibers**

i. **Levi**

Levi discloses this limitation in two ways. (Ex. 1003, ¶237.) Levi discloses an outer skirt of woven PET fabric [yellow] secured to the exterior surface of the frame. (Ex. 1008, 13:50-53, 13:62-66.)

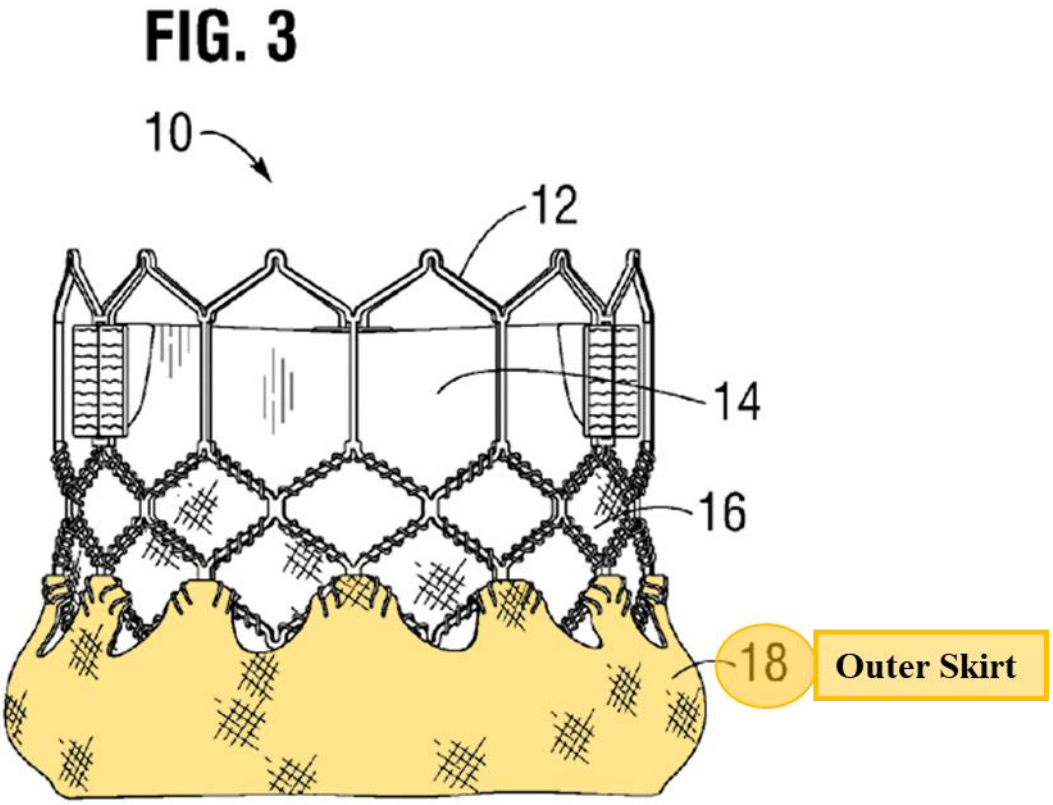

(*Id.*, Fig. 3.) The non-metallic, PET fibers that comprise the portion of the outer skirt that is positioned radially outwardly of the frame is the "first portion of fibers" required by claim 1. (*See id*, 9:52-56, 13:50-53; Ex. 1003, ¶237.) These fibers "extend radially outwardly of the outer frame" because Levi teaches that the outer

skirt, and thus its fibers, "bulge outwardly" from the outer frame. (Ex. 1008, 9:52-56, 13:62-14:2; Ex. 1003, ¶237.)

Alternatively, a POSITA would have understood that the outer surface of Levi's outer skirt would not be entirely smooth, but would necessarily have fibers, or strands, that extend radially outwardly from the surface of the woven PET fabric. (Ex. 1003, ¶238.) A POSITA would have known that textile polyester yarn, such as PET yarn, exhibits a property known as "hairiness," which describes the "amount and length of fibre ends and loops protruding from the body of the yarn." (Ex. 1028, 124.) The hairiness of yarn can be influenced by a number of factors, and a POSITA would have known that polyester fabrics, such as PET, would exhibit some level of hairiness. (*See id.*; *see also* Ex. 1029, 32 (disclosing that 100% polyester yarn included between 50 and 150 hairs per meter).) Therefore, even if the bulging fabric of the outer skirt does not itself constitute a "first portion of fibers," a POSITA would have nonetheless understood that Levi's outer skirt includes a "first portion of fibers" protruding outwardly from the surface of the outer skirt that "extend radially outwardly of the outer frame." (Ex. 1003, ¶238.)

Levi's outer skirt is constructed with excess material that bulges radially outwardly as the frame expands. (Ex. 1008, 13:62-14:2.) The excess material allows the outer skirt to "fill in gaps between the frame 12 and the surrounding native

annulus to assist in forming a good fluid-tight seal between the valve and the native annulus." (*Id.*, 14:3-7.) When the outer skirt "form[s] a good fluid-tight seal between the valve and the native annulus," the fibers of the outer skirt would also seal against the native aortic leaflets, which are attached to the native annulus and extend distally therefrom. (Ex. 1003, ¶239.) Patent Owner has previously admitted that Levi's outer skirt would "extend[] into crevices created by the native leaflets." (Ex. 1046, 21.) Therefore, both the fibers that comprise Levi's outer skirt ***and*** the small fibers projecting outwardly from the skirt are "first portion of fibers" that are "configured to form a first sealing interface against the annulus and native valve leaflets of the patient" when the outer skirt is pressed thereagainst. (Ex. 1003, ¶¶237-239.)

ii. <u>Walther or Spenser II</u>

Walther's outer cloth and Spenser II's compressible material satisfy this limitation as explained in Grounds 1-3. (*Supra* §§VIII.A.1.e, VIII.B.1.e.) A POSITA would have found it obvious to replace Levi's bulging outer PET skirt with Walther's outer cloth or Spenser II's compressible material. (Ex. 1003, ¶¶241, 248.) POSITAs would have known that Levi's outer skirt, Walther's outer cloth, and Spenser II's compressible material were interchangeable. (Ex. 1003, ¶¶241, 248.) While the specific materials have slightly different constructions, they were all designed for use with balloon-expandable heart valves to prevent PVL and could

sufficiently compensate for any elongating or foreshortening of the valve frame during compression and expansion. (*Id.*; Ex. 1007, 1122; Ex. 1011, [00144], Ex. 1008, 6:17-28.)

Moreover, a finite number of methods to address PVL existed in November 2012. (Ex. 1003, ¶¶242, 249.) Walther, Spenser II, and Levi disclose three such methods. (*Id.*) POSITAs would have found it obvious to select any one of these finite, predictable solutions and, as discussed below, would have reasonably expected success in doing so. (*Id.*) Further, POSITAs would have found it obvious to try each material because the different constructions provide unique potential advantages. (*Id.*) For example, Walther discloses that its fibrous outer cloth promotes tissue ingrowth. (Ex. 1007, 1120.) Spenser II's compressible material "may be adapted to encourage coagulation of blood to further fill the gaps and prevent leakage." (Ex. 1011, [00145].) Ultimately, the combination of Levi with Walther or Spenser II would have merely entailed substitution of one known element (outer cloth/compressible material) for another (Levi's outer skirt) to yield the predictable results of reducing PVL. *See KSR*, 550 U.S. at 416; (Ex. 1003, ¶¶241, 248.)

A POSITA would have reasonably expected success in substituting Walther's outer cloth or Spenser II's compressible material for Levi's outer skirt. (Ex. 1003, ¶¶243-246, 250-251.) The valve frames in Walther, Spenser II, and Levi share many

Aortic Innovations, LLC, Exhibit 2129
Page 2129 - 106
IPR2023-01151, Edwards Lifesciences Corp. et al v. Aortic Innovations, LLC

common features, including being balloon-expandable and formed of rows of open cells that are interconnected by metal struts. (*Id.*) Further, Walther discloses that the cloth-covered SAPIEN valves displayed "excellent hydrodynamic performance" and that in-patient implantation of the valve "is feasible," suggesting that other cloth-covered valves would achieve similar success. (Ex. 1007, 1125; Ex. 1003, ¶¶243-246, 250-251.)

Moreover, Levi suggests adding other components, like an outer skirt or seal, to the inflow portion of the outer frame, stating "if additional components are mounted to that portion of the valve, such as an outer skirt 18, the reduced profile of that portion of the valve can help offset or minimize the increase in diameter caused by the additional component." (Ex. 1008, 16:41-45.) Levi also discloses methods to reduce the frame's diameter at the inlet, or to modify the leaflets to reduce the frame size, to create room for an outer seal. (*Id.*, 16:24-17:18.) POSITAs would have understood they could utilize one or more of these methods to add Walther's outer cloth or Spenser II's compressible material to Levi's frame instead of the outer skirt. (Ex. 1003, ¶¶244-246, 251.)

When substituted for Levi's outer skirt, Walther's outer cloth or Spenser II's compressible material would be configured to form a first sealing interface against the annulus and native valve leaflets of the patient when the first portion of fibers is

compressed thereagainst for the reasons previously discussed. (*Supra* §§VIII.A.1.e, VIII.B.1.e, VIII.C.1.e.i.)

f. <u>Second Portion of Fibers</u>

i. <u>Levi</u>

Levi discloses this limitation in two ways. (Ex. 1003, ¶253.) First, Levi's outer skirt, which is comprised of non-metallic, PET fibers, includes "an upper edge 162 defining a plurality of alternating projections 164 and notches 166." (Ex. 1008, 13:53-55.)

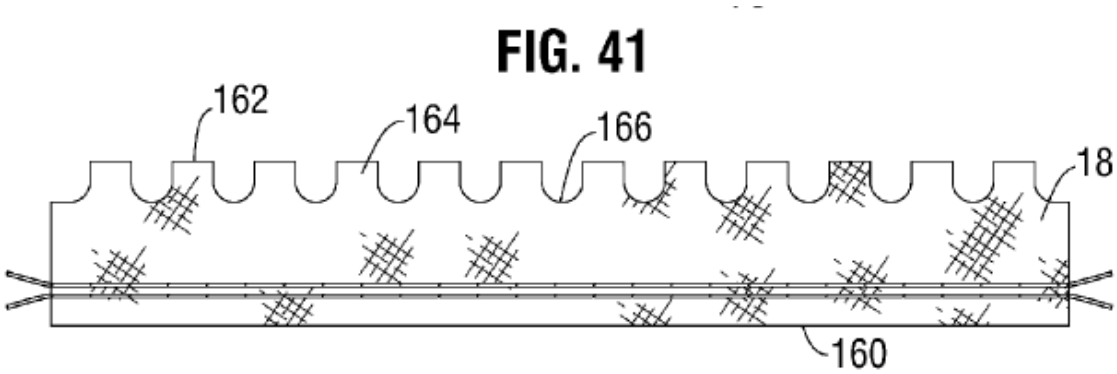

(*Id.*, Fig. 41.) "As shown in Figure 43, each projection 164 can be sutured to the second rung II of struts 24 of the frame 12." (*Id.*, 13:58-59.) "The corners 162 of the projections 164 can be folded over [the] respective struts of rung II and secured with sutures 168." (*Id.*, 13:60-61.)

FIG. 42

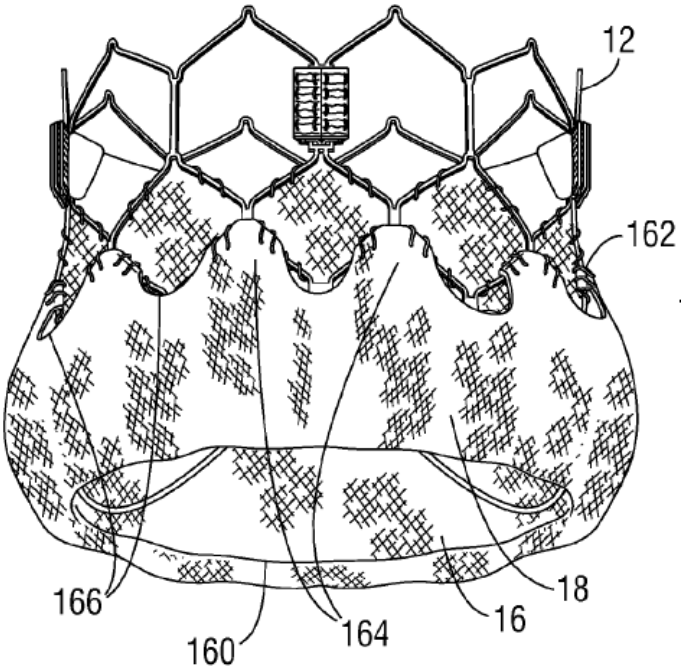

(*Id.*, Fig. 42.) The non-metallic fibers that comprise the corners 162 that are wrapped around the struts and reside on the interior of the frame are the "second portion of fibers" required by claim 1. (Ex. 1003, ¶254.) As shown, the corners are sutured to and "carried by" the outer frame. (*Id.*) Likewise, the corners are configured to "form a second sealing interface against the outer frame when the second portion of fibers is compressed thereagainst." (*Id.*) As the outer skirt bulges outward, the outer skirt pulls upon the corners and compresses the fibers forming the corners against the outer frame. (*Id.*) This compression creates a sealing interface between the corners of the outer skirt and frame. (*Id.*) It also helps create the sealing interface between

the outer skirt and the patient's native tissue by holding the skirt against the frame. (*Id.*)

Alternatively, the interior surface of the outer skirt has small fibers extending from its surface just like the outer surface. (*Supra* §VIII.C.1.e.) As explained previously, the outer skirt is "carried by" the frame and forms a seal between the valve and native tissue. (*Id.*) When the valve is expanded to form the outer seal, the interior surface of the outer skirt is compressed against the outer frame. (Ex. 1003, ¶255.) The small fibers extending from the interior surface of the outer skirt therefore "form a second sealing surface against the outer frame when the second portion of fibers is compressed thereagainst." (*Id.*)

ii. <u>Walther or Spenser II</u>

Alternatively, Walther and Spenser II disclose this limitation as explained in Grounds 1-3. (*Supra* §§VIII.A.1.f, VIII.B.1.f.) POSITAs would have been motivated to substitute Walther's outer cloth or Spenser II's compressible material for Levi's outer skirt with a reasonable expectation of success as explained in the previous section. (*Supra* §VIII.C.1.e.ii.)

Further, Levi's outer skirt is stitched to and carried by Levi's outer frame. (*Supra* §VIII.C.1.f.i.) A POSITA would have been motivated to stitch Walther's outer cloth or Spenser II's compressible material to Levi's frame because Levi

describes this method of attachment and stitching is simple and would have been known to POSITAs. (Ex. 1003, ¶257.) The combination of Walther's outer cloth or Spenser II's compressible material with Levi's valve would therefore include a second portion of fibers "carried by" the outer frame. (*Id*.) The second portion of fibers of Walther's outer cloth or Spenser II's compressible material would be "configured to form a second sealing interface against the outer frame when the second portion of fibers is compressed thereagainst" as explained in Grounds 1-3. (*Supra* §§VIII.A.1.f, VIII.B.1.f.)

g. <u>First and Second Portions in Overlapping Radial Alignment</u>

Levi discloses this limitation in two ways. (Ex. 1003, ¶259.) As described above, the fibers that comprise the corners are wrapped around the struts and oppose the fibers in the rest of the outer skirt. (*Supra* §VIII.C.1.f.i.) Thus, the fibers in the corners and the outer skirt are in overlapping radial alignment. (Ex. 1003, ¶259.)

Alternatively, the outer skirt is made of woven PET fibers. (*Supra* §VIII.C.1.e.i.) Thus, the small fibers extending from the outer and inner surfaces of the skirt are in overlapping radial alignment with each other. (Ex. 1003, ¶259.)

Alternatively, Walther and Spenser II disclose this limitation as explained in Grounds 1-3. (*Supra* §§VIII.A.1.g, VIII.B.1.g.)

h. First Sealing Interface in Overlapping Radial Alignment with Leaflets

Levi discloses this limitation. (Ex. 1003, ¶262.) Levi's valve "is adapted to be implanted in the native aortic annulus" and, when the frame is expanded, the outer skirt will "fill in gaps between the frame 12 and the surrounding native annulus to assist in forming a good fluid-tight seal between the valve and the native annulus." (Ex. 1008, 5:52-54, 14:3-7.) A POSITA would understand that to "fill in gaps between the frame 12 and the surrounding native annulus," the fibers of the outer skirt (i.e., first portion) would be positioned in radially overlapping alignment with the patient's native valve leaflets, which are attached to the native annulus and extend distally therefrom. (Ex. 1003, ¶262.)

Alternatively, if Levi's outer skirt was replaced with Walther's outer cloth or Spenser II's compressible material, a POSITA would understand that the fibers of the outer cloth/compressible material, rather than the outer skirt, would be positioned to radially overlap with the patient's native leaflets. (*Id.*, ¶263.)

i. Free of an Outer Graft Covering

Levi discloses this limitation. (Ex. 1003, ¶264.) Levi's valve is free of an "outer graft covering" between the fibers of the outer skirt and the outer frame. (Ex. 1003, ¶265.) Levi teaches that the outer skirt is sutured to the exterior of the outer

frame. (Ex. 1008, 13:58-61.) Levi does not include any "outer graft covering" on the exterior of the outer frame:

FIG. 20

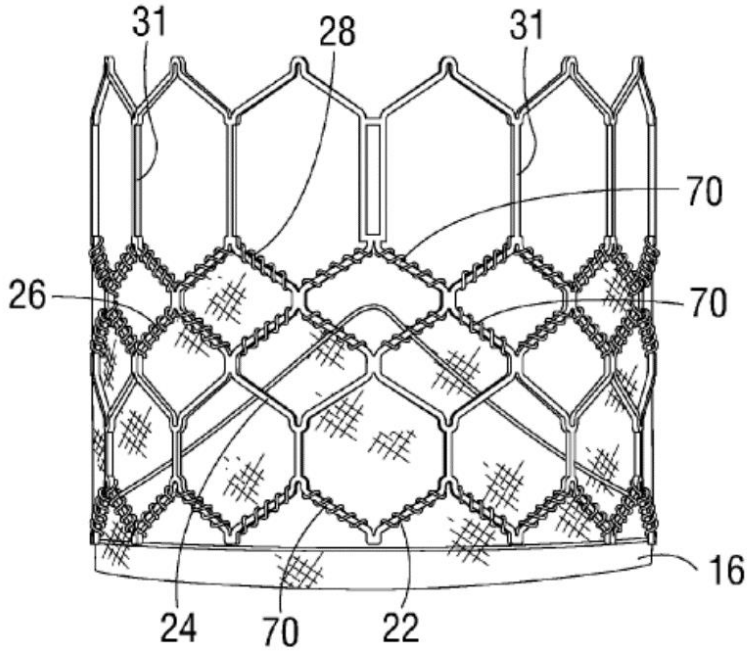

(*Id.*, Fig. 20; Ex. 1003, ¶265.) Therefore, POSITAs would have understood that when the outer skirt is stitched to the exterior of the outer frame, there would be no "outer graft covering" between the fibers of the outer skirt (i.e., first portion) and the outer frame. (Ex. 1003, ¶265.)

Alternatively, Levi and Walther or Spenser II render this limitation obvious. (Ex. 1003, ¶266.) POSITAs would have understood that when Levi's outer skirt is replaced with Walther's outer cloth or Spenser II's compressible material, there

would be no "outer graft covering" between the radially extending fibers of the outer cloth/compressible material (i.e., first portion) and the outer frame because Levi does not include any "outer graft covering" on the exterior of the outer frame. (Ex. 1003, ¶266; *supra* §§VIII.A.1.i, VIII.B.1.i.)

j. Radially Compressed Expanded Orientation

Levi, Walther, and Spenser II disclose this limitation. (Ex. 1003, ¶¶267-268.)

Walther discloses this limitation as explained in Ground 1. (*Supra* §VIII.A.1.j.) Spenser II discloses this limitation as explained in Grounds 2-3. (*Supra* §VIII.B.1.j.) Levi discloses that its valve is "radially collapsible and expandable." (Ex. 1008, Abstract.) Levi teaches that "[w]hen constructed of a plastically-expandable material, the frame 12 (and thus the valve 10) ***can be crimped to a radially compressed*** state on a delivery catheter and then ***expanded*** inside a patient by an inflatable balloon or equivalent expansion mechanism." (*Id.*, 6:20-24 (emphases added).)

k. Balloon Expandable

Levi discloses this limitation or renders it obvious in combination with Walther or Spenser II. (Ex. 1003, ¶¶269-271.)

Levi discloses that "the frame 12 (and thus the valve 10) can be crimped to a radially compressed state on a delivery catheter and then expanded inside a patient

by an inflatable balloon." (Ex. 1008, 6:17-28.) Alternatively, if Levi's outer skirt was replaced with Walther's outer cloth or Spenser II's compressible material, a POSITA would have understood that the resulting valve would remain balloon expandable because both Walther and Spenser II disclose that the outer cloth/compressible material may be added to a balloon-expandable valve. (*See* Ex. 1007, 1122; Ex. 1011, [00144]; Ex. 1003, ¶271.)

l. Compress Fibers to Form a Sealing Interface

Levi discloses this limitation or renders it obvious in combination with Walther or Spenser II. (Ex. 1003, ¶¶272-274.)

As explained above, Levi's outer skirt is configured, upon expansion of the valve, to (1) compress the first portion of fibers against the annulus and leaflets to form a first sealing interface upon expansion of the valve, and (2) compress the second portion of fibers against the frame to form a second sealing interface. (*Supra* §§VIII.C.1.e-f.)

Alternatively, Walther and Spenser II disclose this limitation as explained in Grounds 1-3. (*Supra* §§VIII.A.1.l, VIII.B.1.l.) Therefore, when Walther's outer cloth or Spenser II's compressible material is added to Levi's valve, expansion of the valve within a patient's native aortic valve would be configured to (1) compress the outwardly extending fibers of the outward-facing surface of the outer

cloth/compressible material (i.e., first portion) against the patient's annulus and native leaflets to form a first sealing interface, and (2) compress the PET fibers of the inward-facing surface (i.e., second portion) against the valve's outer frame to form a second sealing interface. (Ex. 1003, ¶274.)

2. <u>Claim 2</u>

Levi discloses this limitation. (Ex. 1003, ¶§§275-276.)

Levi's inner skirt (i.e., inner graft covering) extends to the proximal inflow end of the outer frame:

FIG. 20

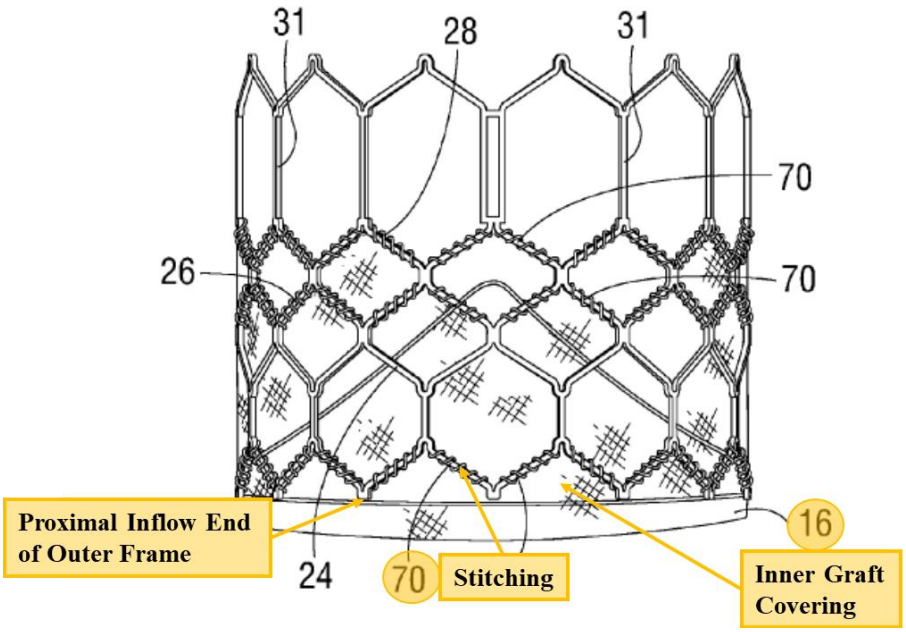

(Ex. 1008, Fig. 20.) As shown above, sutures 70 extend between the inner skirt and through the outer frame to secure the inner skirt to the proximal inflow end of the outer frame. (*See id.*; Ex. 1003, ¶276.)

3. <u>Claim 3</u>

Levi discloses this limitation or renders it obvious. (Ex. 1003, ¶277.) Levi's outer skirt (i.e., first portion of fibers) is constructed of "woven PET" fabric. (Ex. 1008, 13:50-53.) A POSITA would understand that woven PET fabric, including Levi's outer skirt, would include small gaps or spacing between the interwoven fibers of the fabric. (*See, e.g., id.*, 10:48-57 (discussing spacing between the woven fibers of the inner PET skirt); Ex. 1003, ¶278.) A POSITA would therefore understand that gaps existed between the woven PET fibers of Levi's outer skirt which define "opening[s] extending through a thickness" of the outer skirt (i.e., first portion). (Ex. 1003, ¶278.)

Alternatively, a POSITA would have understood that small fibers would extend from the outer surface of the outer skirt. (*Supra* §VIII.C.1.e.) A POSITA would have understood that the small fibers would occur at spaced intervals, thereby defining an opening extending through the thickness created by spacing formed between the small fibers. (Ex. 1003, ¶280.)

Moreover, POSITAs would have had access to a range of suitable PET fabrics having varying thicknesses and densities and could have selected a fabric with a lower density of woven fibers such that even larger openings existed between the fibers. (*Id.*, ¶279; *see* Ex. 1008, 10:48-57.) A POSITA would have been motivated to do so to facilitate further axial elongation of the outer skirt as the valve is expanded to provide a more uniform and predictable crimping profile. (Ex. 1003, ¶279; Ex. 1008, 10:35-57.)

Alternatively, Walther and Spenser II disclose this limitation as explained in Grounds 1-3. (*Supra* §§VIII.A.3, VIII.B.3.)

4. <u>Claim 4</u>

Levi discloses this limitation. (Ex. 1003, ¶283.) Just as Levi's outer skirt (first portion of fibers) would have defined openings, the corners of the outer skirt (second portion of fibers), which are made from the same PET and carried by the frame, would define an opening extending through a thickness thereof that is created by spacing formed between adjacent fibers. (*Id.*) Likewise, the fibers extending from the inner surface of the outer skirt would also define such an opening for the same reasons as the small fibers extending from the outer surface. (*Id.*; *supra* §VIII.C.3.) At least some of these openings would extend to the outer frame because the second

portion of fibers in the outer skirt directly abuts, and is compressed against, the outer frame when the valve is expanded. (Ex. 1003, ¶283.)

Alternatively, Walther and Spenser II disclose this limitation as explained in Grounds 1-3. (*Supra* §§VIII.A.4, VIII.B.4.)

IX. SECONDARY CONSIDERATIONS

Petitioner understands that Patent Owner does not practice the ’236 patent or sell any products covered by the ’236 patent. Therefore, Petitioner is not aware of any evidence of secondary considerations. (Ex. 1003, ¶¶286-287.) If Patent Owner identifies any evidence of secondary considerations, Petitioner respectfully requests an opportunity to respond.

X. THE BOARD SHOULD NOT DENY INSTITUTION UNDER 35 U.S.C. §325(D)

Walther, which describes the cloth-covered SAPIEN, was not of record during prosecution. Likewise, Cribier and Spenser, which describe SAPIEN, were not of record. Thus, the Examiner did not consider any reference (or combination of references) that disclosed Walther’s combination of a prosthetic heart valve having (1) a fibrous outer seal stitched to the exterior of a balloon-expandable stent frame and (2) an “inner graft covering” stitched to the interior of the stent frame. Because

Aortic Innovations, LLC, Exhibit 2129
Page 2129 - 119
IPR2023-01151, Edwards Lifesciences Corp. et al v. Aortic Innovations, LLC

Walther, Cribier, and Spenser were never before the Examiner, the Board should not exercise its discretion to deny institution under 35 U.S.C. §325(d).

Spenser's parent's publication, Publication No. 2003/0153974, was listed on an Information Disclosure Statement (IDS), but the publication does not disclose Spenser's Figure 44a relied on herein. (*Compare* Exs. 1010, 1026.)

Patent Owner also characterized Levi and Spenser II in a Preliminary Amendment. Patent Owner attempted to distinguish the prior art on two primary grounds. First, Patent Owner argued adding an outer seal to a valve having an inner seal "undesirably increases the overall valve profile" such that a POSITA would not be motivated to do so. (Ex. 1002, 194.) As described above, this assertion is incorrect. (*Supra* §§VIII.A.1, VIII.B.1, VIII.C.1.) Moreover, the '236 patent does not describe methods to reduce the valve profile and, therefore, Patent Owner cannot rely on this argument to distinguish the prior art. *See e.g., Smith & Nephew, Inc. v. Rea*, 721 F.3d 1371, 1380-81 (Fed. Cir. 2013) ("[A]n unclaimed and undisclosed feature . . . cannot be the basis for finding [a] patent to be non-obvious over the prior art."); *see also E.I. du Pont de Nemours & Co. v. Phillips Petroleum Co.*, 849 F.2d 1430, 1433 (Fed. Cir. 1988) ("[N]o principle of law . . . would authorize us to read into a claim an element which is not present, for the purpose of making out a case of novelty . . . ."); *TorPharm, Inc. v. Ranbaxy Pharms., Inc.*, 336 F.3d 1322, 1331 (Fed.

Cir. 2003) ("[N]onobviousness is assessed by reference to the claimed invention, and not by reference to properties that cannot ultimately be derived from the claims.").

Second, Patent Owner argued that "one would not look to stent graft seals to modify" a heart valve. (Ex. 1002, 197.) This argument is irrelevant because Petitioner does not rely on stent grafts for any combinations.

Regarding Levi, Patent Owner ***admitted*** that Levi "appears to teach an inner and outer seal in FIG. 42." (Ex. 1002, 186-187.) However, Patent Owner also included attorney argument that Levi's "seal . . . had a relatively short height so that the sealing aspects would be below the native leaflets or extending into crevices created by the native leaflets, but not radially overlapping with the leaflets at a most narrow spot of the ascending aorta." (Ex. 1002, 194-195.) Yet, as admitted by Patent Owner, Levi's outer seal presses against the patient's native leaflets. (*Supra* §VIII.C.1.h.) Moreover, no claim requires the seal to press against the leaflets "at a most narrow spot of the ascending aorta." (Ex. 1002, 195.) Patent Owner also never addressed combining Levi with Walther or Spenser II as proposed herein.

Regarding Spenser II, patent owner ***admitted*** that Spenser II "appears to teach a thick band with fibers emanating therefrom in FIG. 22," but argued that "there is no graft forming the inner frame, thus the inner seal is missing." (Ex. 1002, 187.)

However, as explained herein, POSITAs would have found it obvious to combine Spenser II with Spenser or Levi, which explicitly disclose an inner frame that includes a graft covering. (*Supra* §VIII.B.1, VIII.C.1.) Patent Owner never addressed these combinations.

Patent Owner also included attorney argument that POSITAs would not add Spenser II's outer seal to a valve that included an inner seal due to concerns about increasing the crimped profile, restricting expansion and foreshortening of the valve, and because Spenser II already provides a method for addressing PVL. (*See* Ex. 1002, 196.) However, the '236 patent does not discuss the problems of crimped profile or restriction of the expansion or foreshortening of the valve, nor does it discuss how to address or solve them. For example, the '735 patent never discloses the length, width, or density of the collagen fibers or the valve's crimped diameter. Consequently, Patent Owner cannot argue that adapting a valve with an outer seal to account for increased crimped profile, expansion, and valve foreshortening would have been beyond POSITAs' skill. *See e.g., Smith & Nephew,* 721 F.3dat 1380-81; *see also E.I. du Pont de Nemours*, 849 F.2dat 1433; *TorPharm,* 336 F.3dat 1331 . Moreover, Walther demonstrates these arguments are unfounded. In the real world, POSITAs added an outer seal, similar to Spenser II's compressible material, to SAPIEN, which included an inner graft covering. (*Supra* §VIII.A.1.)

Patent Owner also included attorney argument that "Spenser [II] appears to include an outer graft covering between the fibers and the outer frame." (Ex. 1002, 196.) Patent Owner provided no support for this statement and did not cite to any portion of Spenser II that supposedly teaches such an "outer graft covering." (*Id.*) As explained herein, Spenser II contains no such disclosure. (*Supra* §VIII.B.1.i.ii; Ex. 1011, [00145].)

Consequently, the Board should not deny institution under §325(d) based on Patent Owner's statements in the Preliminary Amendment. S*ee Comcast Cable Commc'ns LLC v. Promptu Sys. Corp.*, IPR2018-00342, Paper 13 (PTAB July 19, 2018) (declining to deny institution under §325(d)).

XI. MANDATORY NOTICES UNDER 37 C.F.R. §42.8(A)(1)

The following mandatory notices are provided as part of this Petition.

A. Real Party-In-Interest (37 C.F.R. §42.8(b)(1))

Edwards Lifesciences Corp. and Edwards Lifesciences LLC are the real parties in interest.

B. Related Matters (37 C.F.R. §42.8(b)(2))

Petitioner has filed a Petition for *Inter Partes* Review of U.S. Patent No. 10,792,172 ("'172 patent"). *Edwards Lifesciences Corp. v. Aortic Innovations, LLC*, IPR2021-01527 (Filed Sept. 10, 2021). Petitioner has also filed a Petition for *Inter*

Partes Review of U.S. Patent No. 10,857,011 ("the '011 patent"). *Edwards Lifesciences Corp. v. Aortic Innovations, LLC,* IPR2021-01584 (Filed Sept. 28, 2021). Petitioner has also filed a Petition for *Inter Partes* Review of U.S. Patent No. 10,966,846 ("'the '846 patent"). *Edwards Lifesciences Corp. v. Aortic Innovations, LLC,* IPR2022-00034 (Filed Oct. 11, 2021). Petitioner has also filed a Petition for *Inter Partes* Review of U.S. Patent No. 10,881,538 ("the '538 patent"). *Edwards Lifesciences Corp. v. Aortic Innovations, LLC,* IPR2022-00193 (Filed Nov. 11, 2021). Petitioner has also filed a Petition for *Inter Partes* Review of U.S. Patent No. 11,129,735 ("the '735 patent"). *Edwards Lifesciences Corp. v. Aortic Innovations, LLC,* IPR2022-**** (Filed February 4, 2022). The '236 patent is part of the same patent family and shares a specification with the '172, '011,'846, '538, and '735 patents.

Patent Owner also recently filed suit against Petitioner alleging infringement of the '735 patent, '538 patent, the '846 patent, and '236 patents by Petitioner's SAPIEN 3 Ultra valve. *Aortic Innovations LLC v. Edwards Lifesciences Corp.,* Case No. 1:21-CV-01377 (D. Del., filed Sept. 28, 2021). When this Petition was filed, the Complaint, associated papers, and a Motion to Dismiss filed by Petitioner were the only documents filed in the case. The court has set a hearing on the Motion to Dismiss for March 10, 2022.

Petitioner is not aware of any other judicial or administrative matter that would affect, or be affected by, a decision in this proceeding.

C. Lead and Backup Counsel (37 C.F.R. §42.8(b)(3))

Petitioner provides the following designation of counsel, all of whom are included in Customer No. 20,995 identified in Petitioner's Power of Attorney.

Lead Counsel	Back-up Counsel
Craig S. Summers (Reg. No. 31,430) 2css@knobbe.com BoxEdwards21-5@knobbe.com Postal and Hand-Delivery Address: Knobbe, Martens, Olson & Bear, LLP 2040 Main Street, 14th Floor Irvine, CA 92614 Telephone: (949) 760-0404 Facsimile: (949) 760-9502	Joshua J. Stowell (Reg. No. 64,096) 2jys@knobbe.com Brian C. Barnes (Reg. No. 75,805) 2bcb@knobbe.com Postal and Hand-Delivery Address: Knobbe, Martens, Olson & Bear, LLP 2040 Main Street, 14th Floor Irvine, CA 92614 Telephone: (949) 760-0404 Facsimile: (949) 760-9502

D. Service Information Under 37 C.F.R. §42.8(b)(4)

Please address all correspondence to lead counsel and back-up counsel at the addresses shown above. Petitioner also consents to electronic service by email to BoxEdwards21-5@knobbe.com.

XII. FEES

The fee for this petition has been paid. Any additional fees may be charged to Deposit Account 11-1410.

XIII. GROUNDS FOR STANDING UNDER 37 C.F.R. §42.104

Petitioner certifies that the ’236 patent is available for IPR and that Petitioner is not barred or estopped from requesting IPR challenging the patent claims on the identified grounds.

XIV. CONCLUSION

For the reasons above, Petitioner has established a reasonable likelihood of prevailing in showing that the challenged claims are unpatentable as anticipated or obvious and, therefore, requests that the Board institute an *inter partes* review and cancel the claims.

Respectfully submitted,

KNOBBE, MARTENS, OLSON & BEAR, LLP

Dated: February 7, 2022

By: */Joshua J. Stowell/*
Craig S. Summers (Reg. No. 31,430)
Joshua J. Stowell (Reg. No. 64,096)
Brian C. Barnes (Reg. No. 75,805)
Customer No. 20,995

Attorneys for Petitioners
EDWARDS LIFESCIENCES CORP. AND
EDWARDS LIFESCIENCES LLC

CERTIFICATE OF COMPLIANCE

Pursuant to 37 C.F.R. §42.24(d), the undersigned certifies that the foregoing **PETITION FOR *INTER PARTES* REVIEW OF U.S. PATENT NO. 10,987,236**, exclusive of the parts exempted as provided in 37 C.F.R. §42.24(a), contains 13,462 words and therefore complies with the type-volume limitations of 37 C.F.R. §42.24(a).

Respectfully submitted,

KNOBBE, MARTENS, OLSON & BEAR, LLP

Dated: February 7, 2022

By: */Joshua J. Stowell/*
Craig S. Summers (Reg. No. 31,430)
Joshua J. Stowell (Reg. No. 64,096)
Brian C. Barnes (Reg. No. 75,805)
Customer No. 20,995

Attorneys for Petitioners
EDWARDS LIFESCIENCES CORP. AND
EDWARDS LIFESCIENCES LLC

CERTIFICATE OF SERVICE

I hereby certify that a true and correct copy of the foregoing **PETITION FOR *INTER PARTES* REVIEW OF U.S. PATENT NO. 10,987,236** and **EXHIBITS 1001 – 1070** are being served on, via Federal Express overnight mail on counsel of record for U.S. Patent 10,987,236 as addressed below:

Justin Nifong
NK Patent Law
4917 Waters Edge Drive, Suite 275
Raleigh, NC 27606

Dated: February 7, 2022 By: /Joshua J. Stowell/

Craig S. Summers (Reg. No. 31,430)
Joshua J. Stowell (Reg. No. 64,096)
Brian C. Barnes (Reg. No. 75,805)
Customer No. 20,995

Attorneys for Petitioners
EDWARDS LIFESCIENCES CORP. AND
EDWARDS LIFESCIENCES LLC

54011214.9