US010987236B1

(12) **United States Patent**
Shahriari

(10) **Patent No.: US 10,987,236 B1**
(45) **Date of Patent: *Apr. 27, 2021**

(54) **TRANSCATHETER AORTIC VALVE REPAIR HAVING IMPROVED PARAVALVULAR SEAL**

(71) Applicant: **Aortic Innovations, LLC**, Hilsboro Beach, FL (US)

(72) Inventor: **Ali Shahriari**, Boca Raton, FL (US)

(73) Assignee: **Aortic Innovations, LLC**, Hillsboro Beach, FL (US)

(*) Notice: Subject to any disclaimer, the term of this patent is extended or adjusted under 35 U.S.C. 154(b) by 0 days.

This patent is subject to a terminal disclaimer.

(21) Appl. No.: **17/131,869**

(22) Filed: **Dec. 23, 2020**

Related U.S. Application Data

(60) Continuation of application No. 17/060,557, filed on Oct. 1, 2020, now Pat. No. 10,888,441, which is a continuation of application No. 16/910,189, filed on Jun. 24, 2020, now Pat. No. 10,857,011, which is a continuation of application No. 16/808,137, filed on Mar. 3, 2020, now Pat. No. 10,792,172, which is a continuation of application No. 16/736,879, filed on Jan. 8, 2020, now Pat. No. 10,842,655, which is a continuation of application No. 16/042,286, filed on Jul. 23, 2018, now Pat. No. 10,555,823, which is a

(Continued)

(51) **Int. Cl.**

A61F 2/856	(2013.01)
A61F 2/24	(2006.01)
A61F 2/82	(2013.01)
A61F 2/962	(2013.01)
A61F 2/07	(2013.01)
A61F 2/06	(2013.01)

(52) **U.S. Cl.**
CPC ***A61F 2/856*** (2013.01); ***A61F 2/07*** (2013.01); ***A61F 2/2418*** (2013.01); ***A61F 2/82*** (2013.01); ***A61F 2/962*** (2013.01); *A61F 2002/061* (2013.01)

(58) **Field of Classification Search**
CPC A61F 2/856; A61F 2/07; A61F 2/2418; A61F 2/82; A61F 2/962; A61F 2002/061
See application file for complete search history.

(56) **References Cited**

U.S. PATENT DOCUMENTS

7,381,219 B2 6/2008 Salahieh et al.
7,921,678 B2 4/2011 Norris et al.
(Continued)

FOREIGN PATENT DOCUMENTS

WO 2006124649 11/2006
WO WO-2006124649 A2 * 11/2006 ..... A61F 2/2418
(Continued)

OTHER PUBLICATIONS

PATSPADE Search Report, dated Jan. 21, 2021, pp. 1-53, USA.
(Continued)

Primary Examiner — Jennifer Dieterle
Assistant Examiner — Tiffany P Shipmon
(74) *Attorney, Agent, or Firm* — NK Patent Law

(57) **ABSTRACT**

A transcatheter aortic valve replacement (TAVR) device includes a paravalvular seal that includes outwardly extending fibers that create a seal with the aortic annulus when the TAVR is deployed.

4 Claims, 19 Drawing Sheets

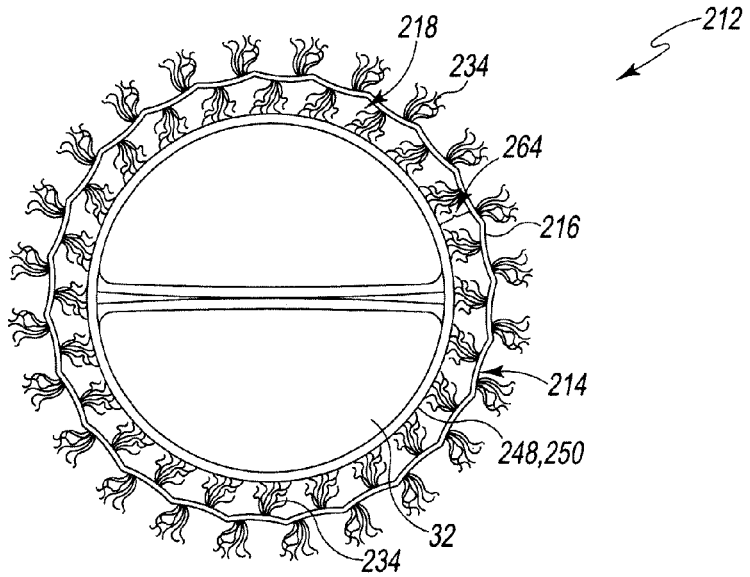

Related U.S. Application Data

continuation of application No. 14/614,628, filed on Feb. 5, 2015, now Pat. No. 10,028,848, which is a continuation of application No. 14/569,306, filed on Dec. 12, 2014, now Pat. No. 9,339,399, which is a division of application No. 13/706,896, filed on Dec. 6, 2012, now Pat. No. 8,940,040.

(60) Provisional application No. 61/723,446, filed on Nov. 7, 2012, provisional application No. 61/567,458, filed on Dec. 6, 2011.

(56) **References Cited**

U.S. PATENT DOCUMENTS

8,408,214	B2	4/2013	Spenser	
9,333,075	B2	5/2016	Biadillah et al.	
9,339,377	B2	5/2016	Quadri et al.	
9,370,418	B2	6/2016	Pintor et al.	
9,532,868	B2	1/2017	Braido	
10,258,464	B2	4/2019	Delaloye et al.	
10,792,172	B2	10/2020	Shahriari	
2002/0052649	A1*	5/2002	Greenhalgh	A61F 2/0063 623/1.35
2003/0153974	A1	8/2003	Spenser	
2004/0082989	A1	4/2004	Cook et al.	
2004/0256759	A1	12/2004	Hartley	
2006/0276813	A1	12/2006	Greenberg	
2008/0077236	A1	3/2008	Letac et al.	
2008/0188929	A1	8/2008	Schreck	
2008/0319521	A1	12/2008	Norris et al.	
2011/0009948	A1	1/2011	Huang et al.	
2011/0098802	A1*	4/2011	Braido	A61F 2/2442 623/1.26
2011/0218619	A1	9/2011	Benichou et al.	
2011/0319991	A1	12/2011	Hariton et al.	
2012/0123529	A1	5/2012	Levi et al.	
2013/0304196	A1	11/2013	Kelly	
2018/0311037	A1	11/2018	Morriss	

FOREIGN PATENT DOCUMENTS

WO	2006005015	1/2011
WO	9829057	5/2012
WO	2006005015	5/2012

OTHER PUBLICATIONS

Bobo, Donald E., Edwards Lifesciences Surgical Heart Valve Therapy, Dec. 9, 2011 presumed publication, slide 13.

Buller, Nigel, Declaration in IPR IPR2017-01293, Oct. 11, 2016.

Murgitroyd, Search Report dated Feb. 2, 2021, USA.

Edwards Lifesciences 2011 Annual Report, p. 6, USA, published 2011.

Al-Attar, Nawwar, Next generation surgical aortic biological prostheses : "sutureless valves", published Dec. 21, 2011, available at https://www.escardio.org/Journals/E-Journal-of-Cardiology-Practice/Volume-10/Next-Generation-Surgical-Aortic-Biological-Prostheses-Sutureless-Valves.

Kocher, Alfred, One-year outcomes of the Surgical Treatment of Aortic Stenosis Witha Next Generation Surgical Aortic Valve (TRITON) trial:A prospective multicenter study of rapid-deployment aortic valvereplacement with the Edwards Intuity Valve System, Jan. 2013, available at https://www.jtcvs.org/article/S0022-5223(12)01111-7/pdf.

* cited by examiner

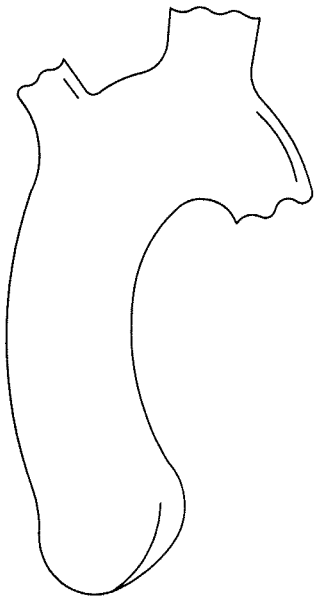

Fig. 1

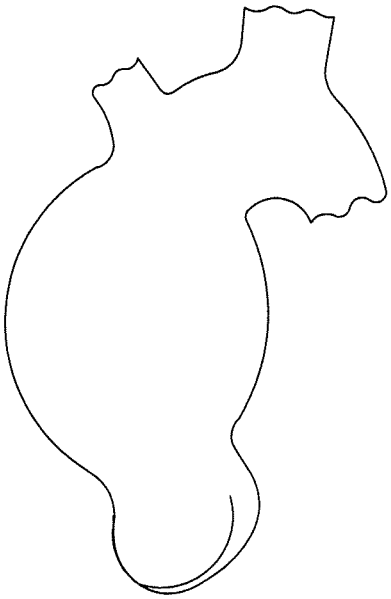

Fig. 1B

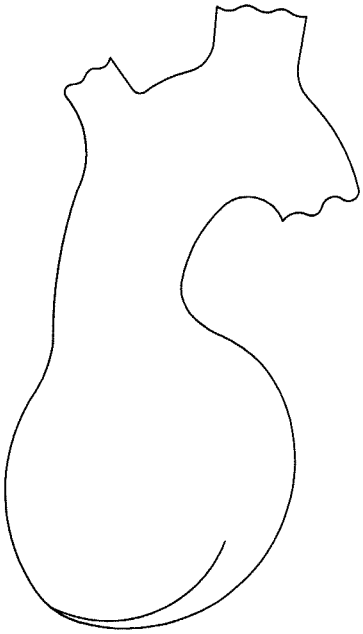

Fig. 1A

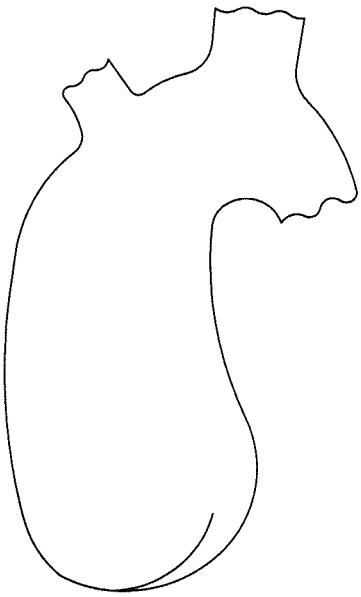

Fig. 1C

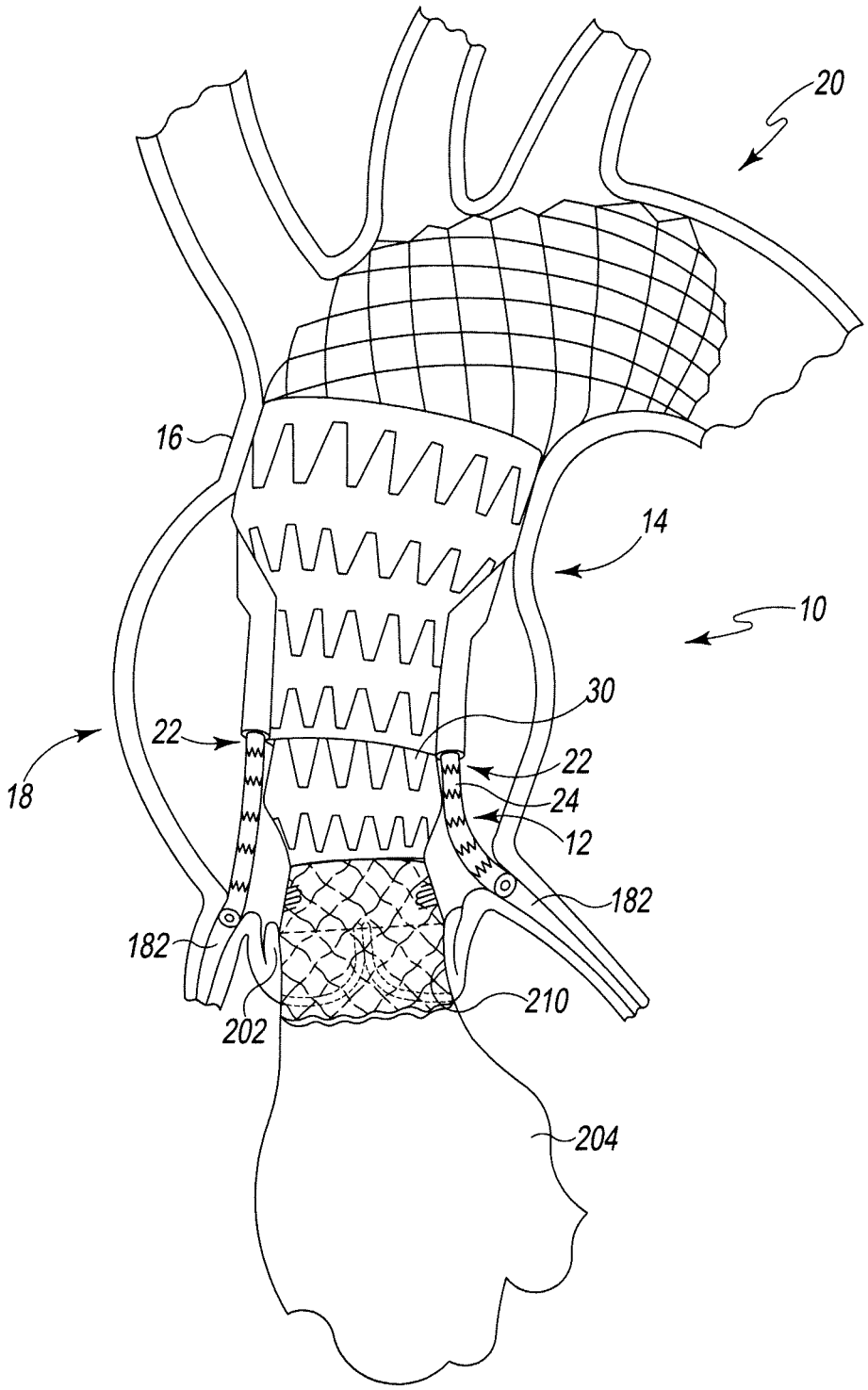

Fig. 2

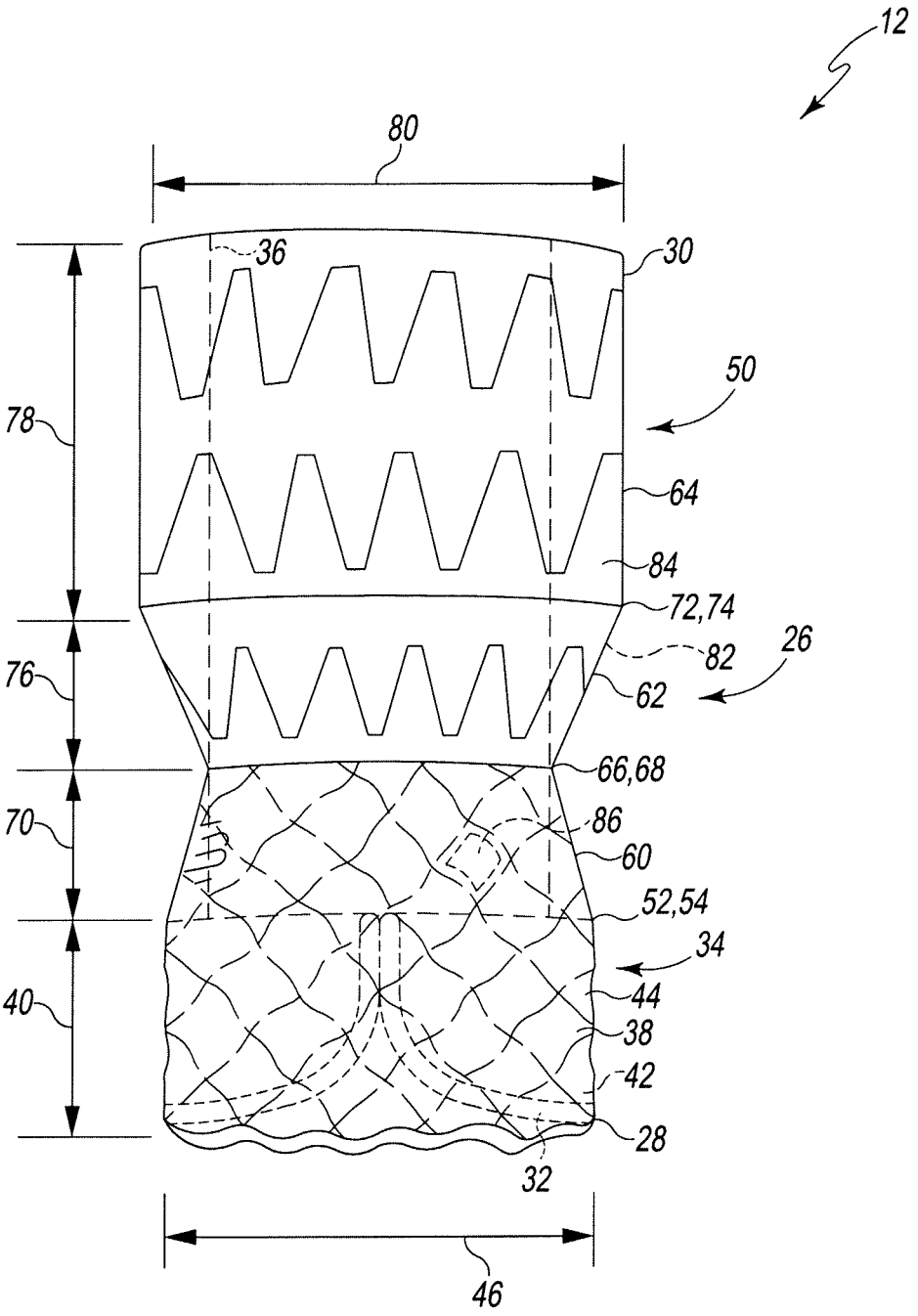
12
80
36
30
50
78
64
84
72,74
82
26
76
62
66,68
70
86
60
52,54
34
40
44
38
42
28
32
46

Fig. 3

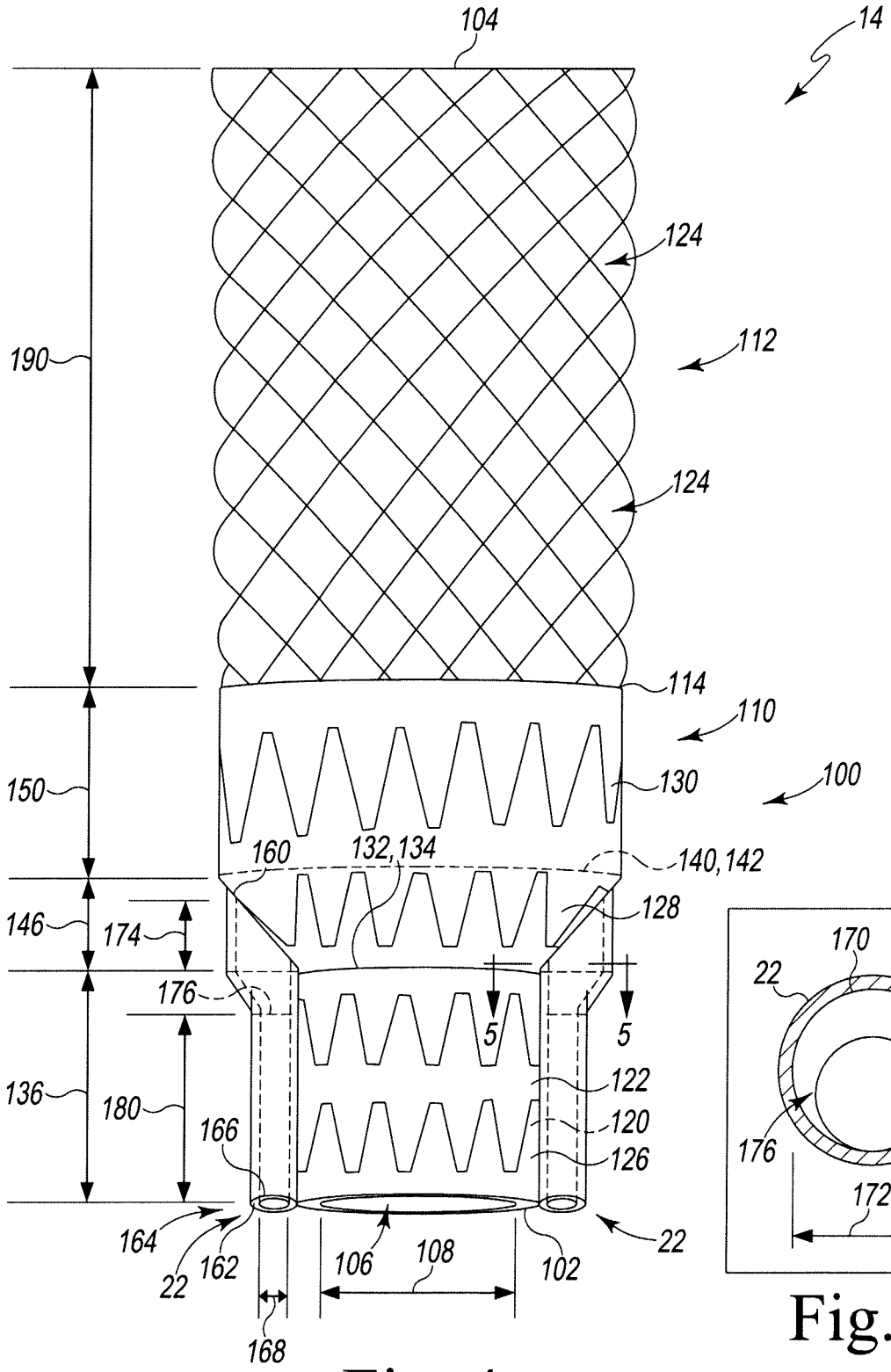
104
14
124
112
190
124
114
110
150
130
100
160
132,134
140,142
146
174
128
176
5
5
136
180
122
120
166
126
164
22
162
106
108
102
22
168

Fig. 4

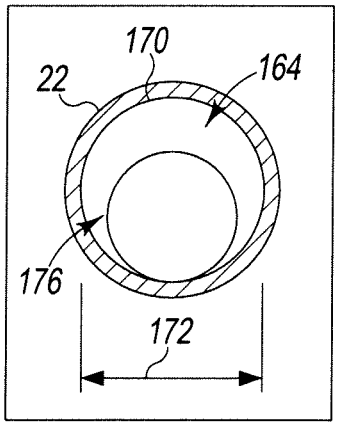
170
22
164
176
172

Fig. 5

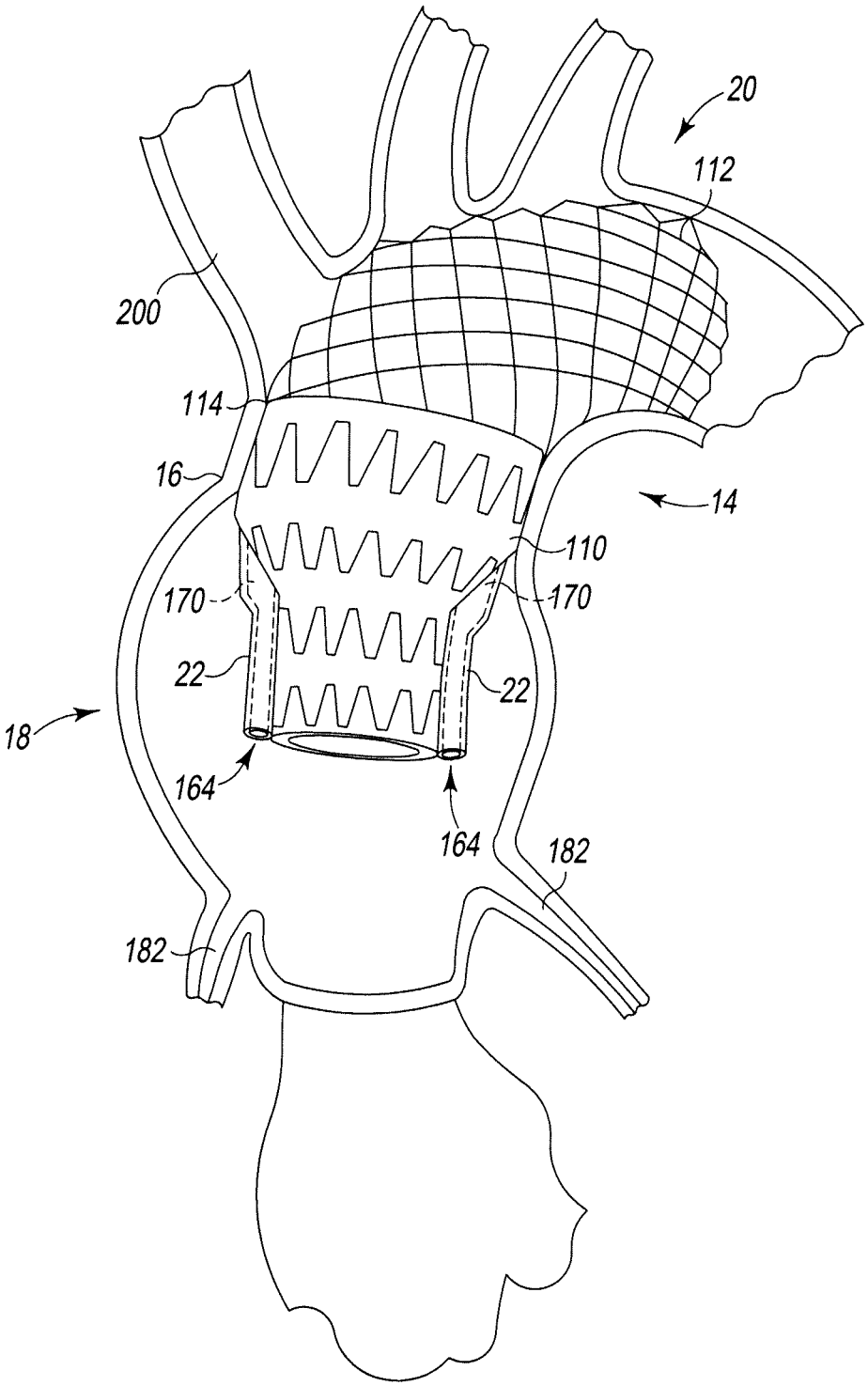

Fig. 6

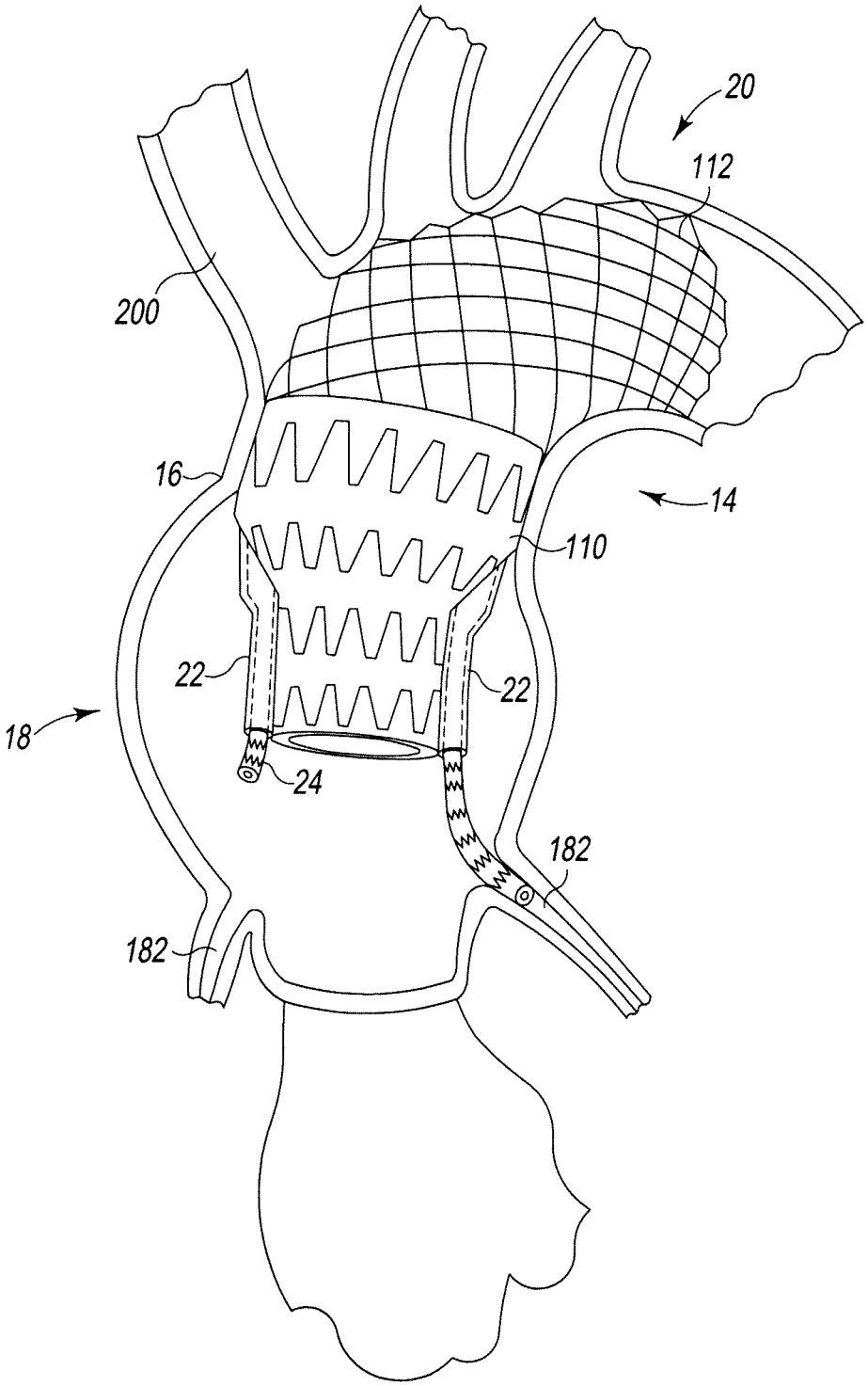

Fig. 7

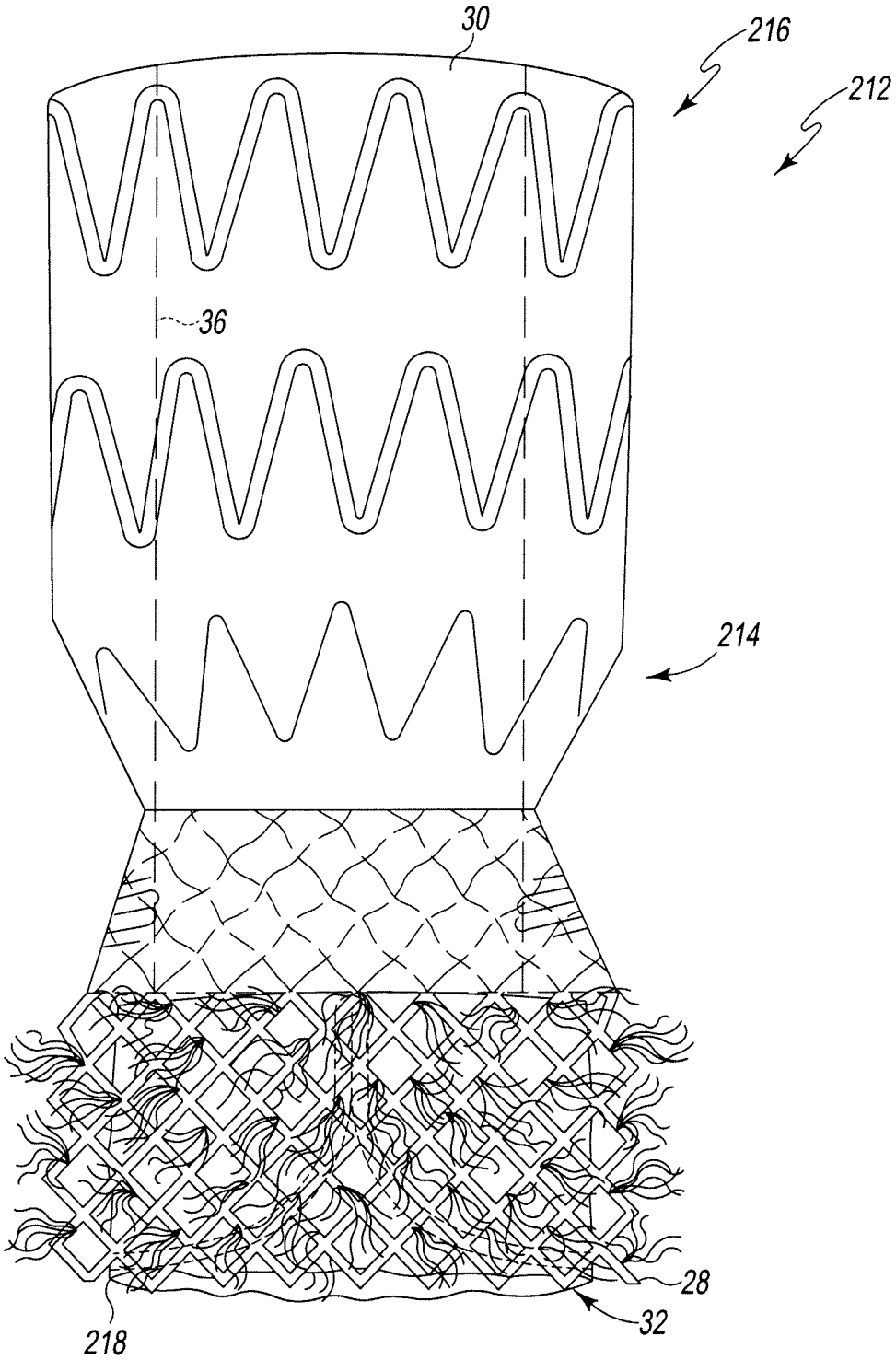

Fig. 8

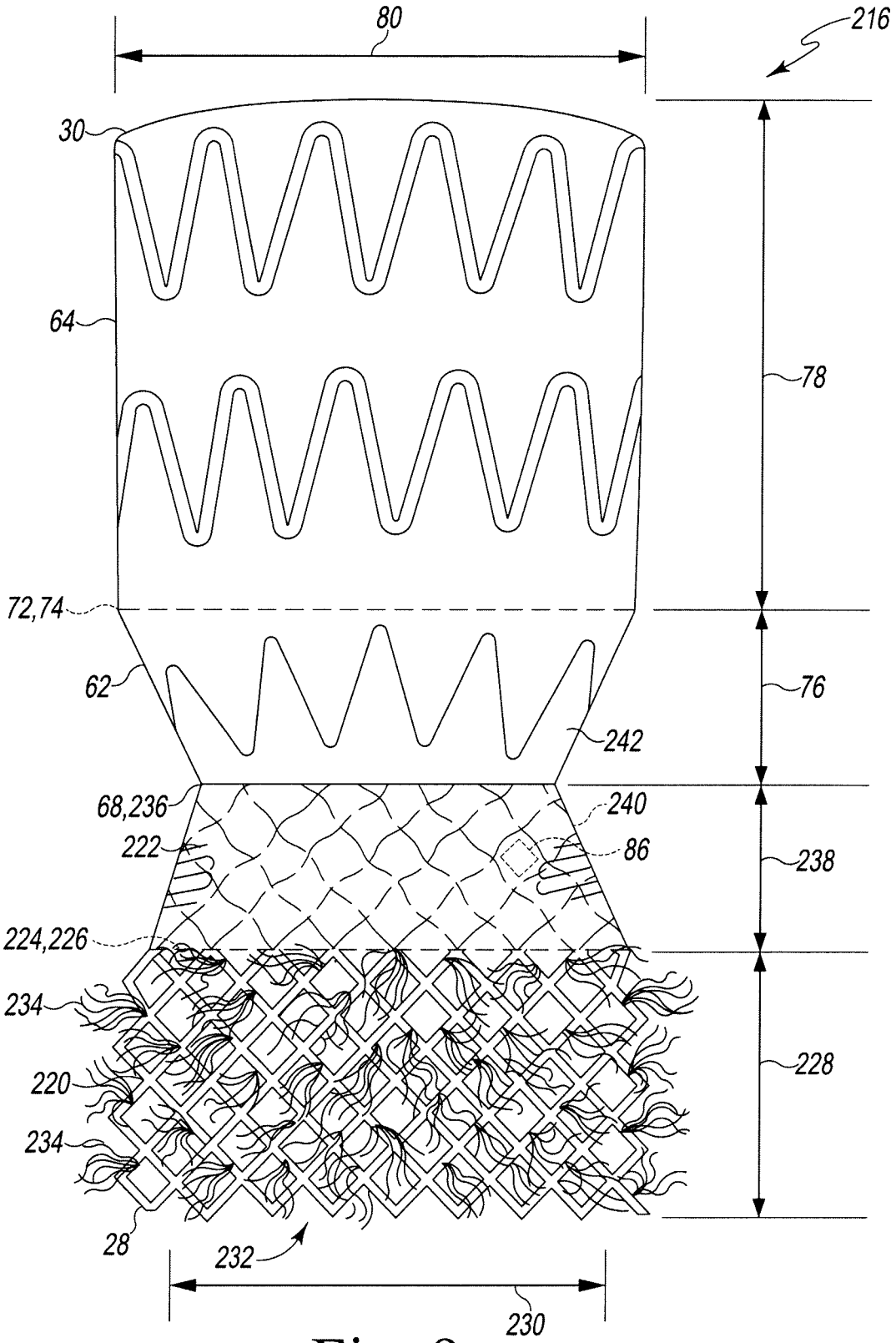
80
216
30
64
78
72,74
62
76
242
68,236
240
222
86
238
224,226
234
228
220
234
28
232
230

Fig. 9

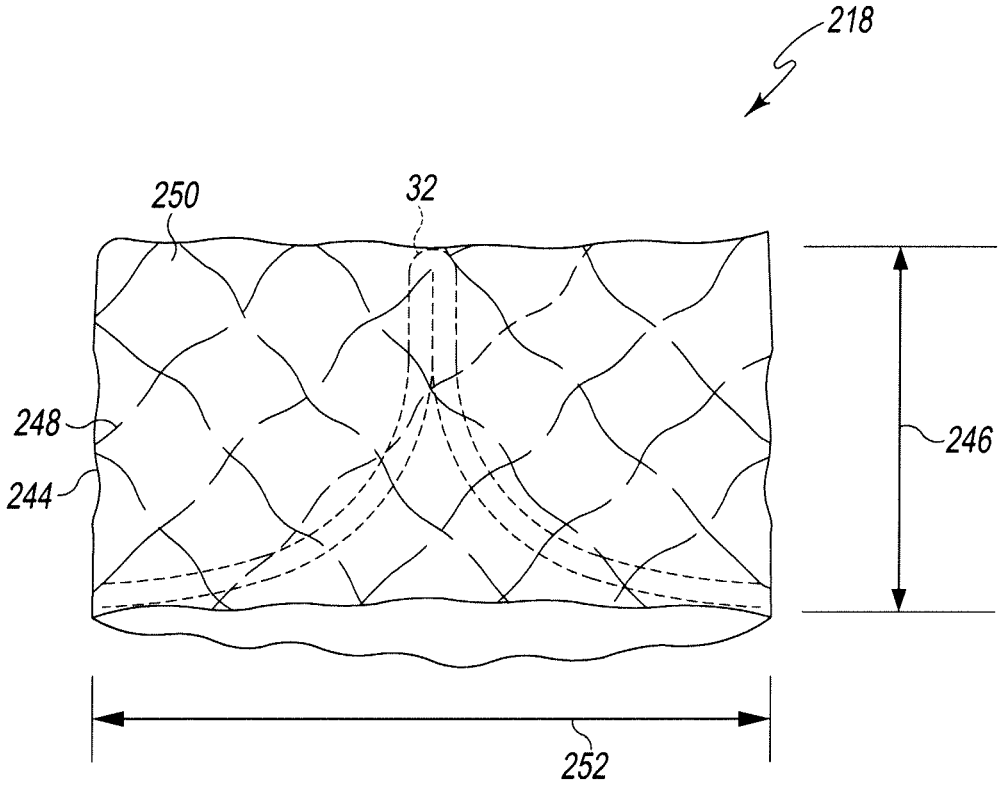

Fig. 10

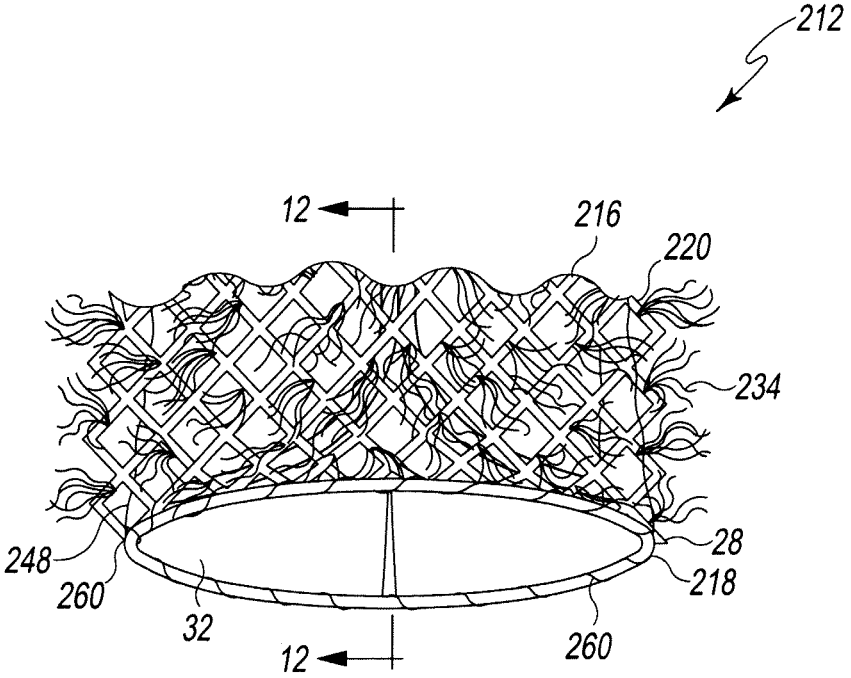

Fig. 11

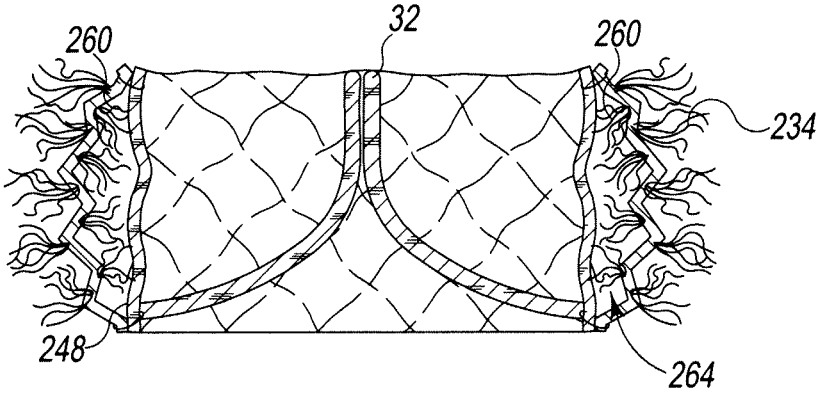

Fig. 12

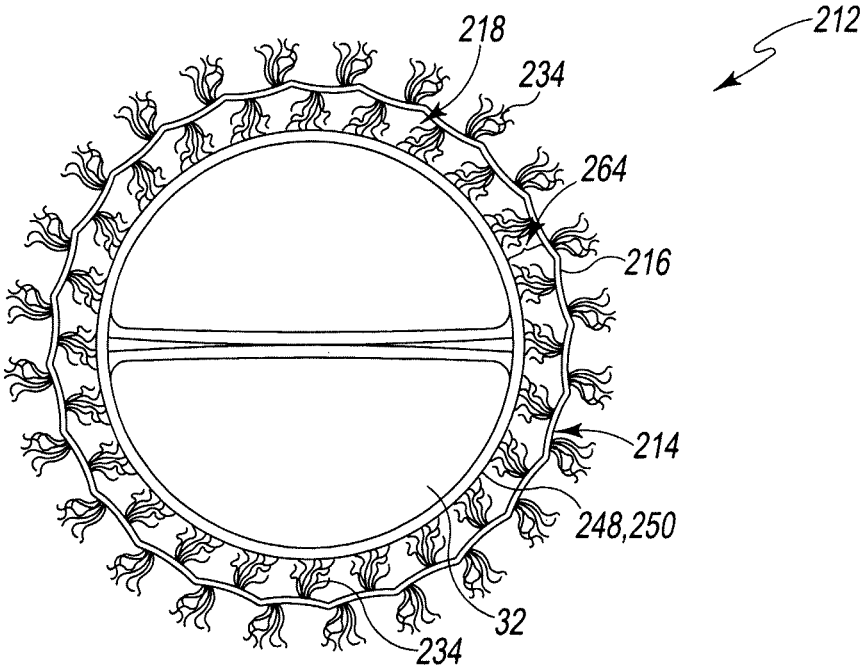
212
218
234
264
216
214
248,250
32
234

Fig. 13

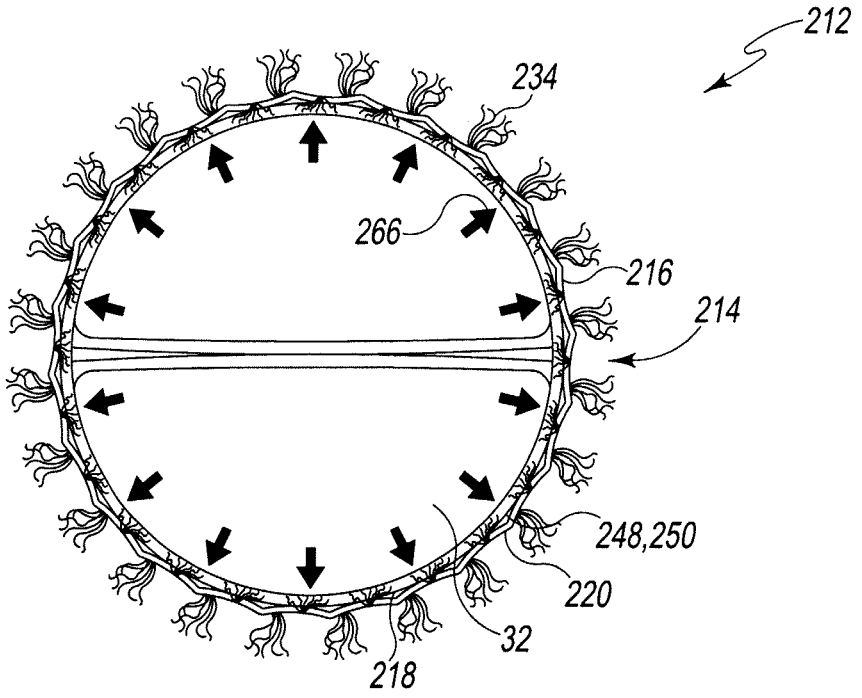
212
234
266
216
214
248,250
220
32
218

Fig. 14

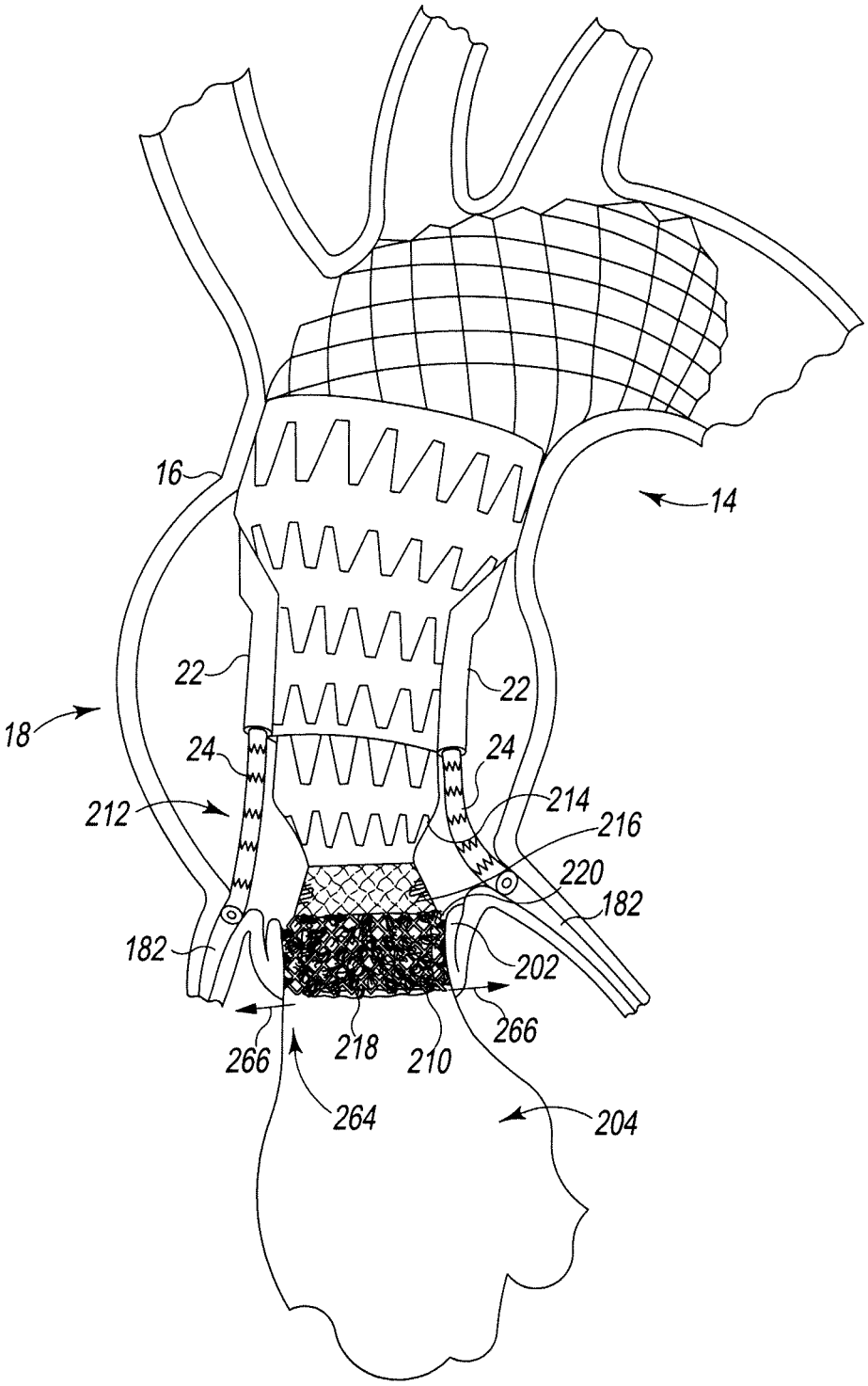
16
14
22
22
18
24
24
212
214
216
220
182
182
202
266
266
218
210
264
204

Fig. 15

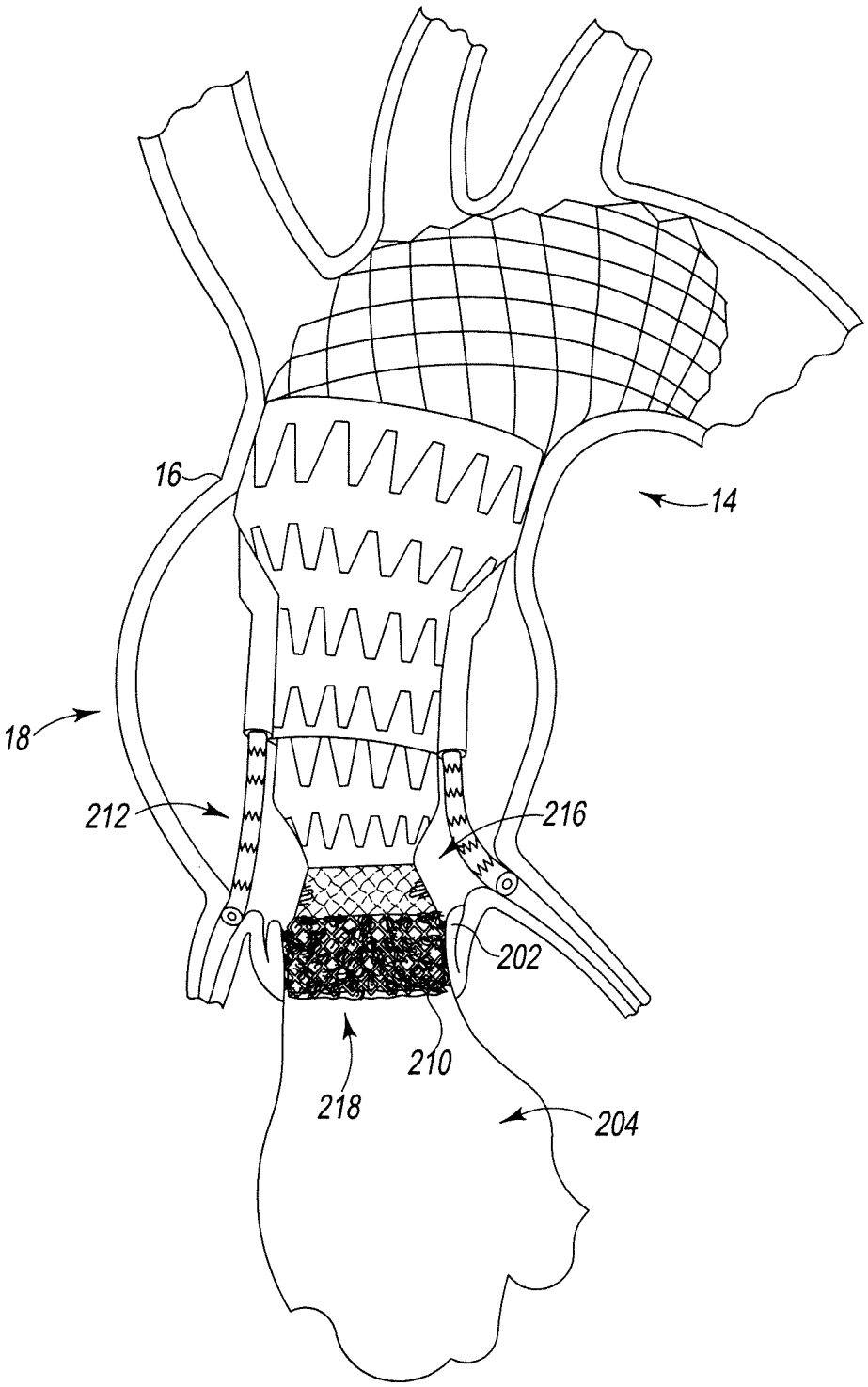

Fig. 16

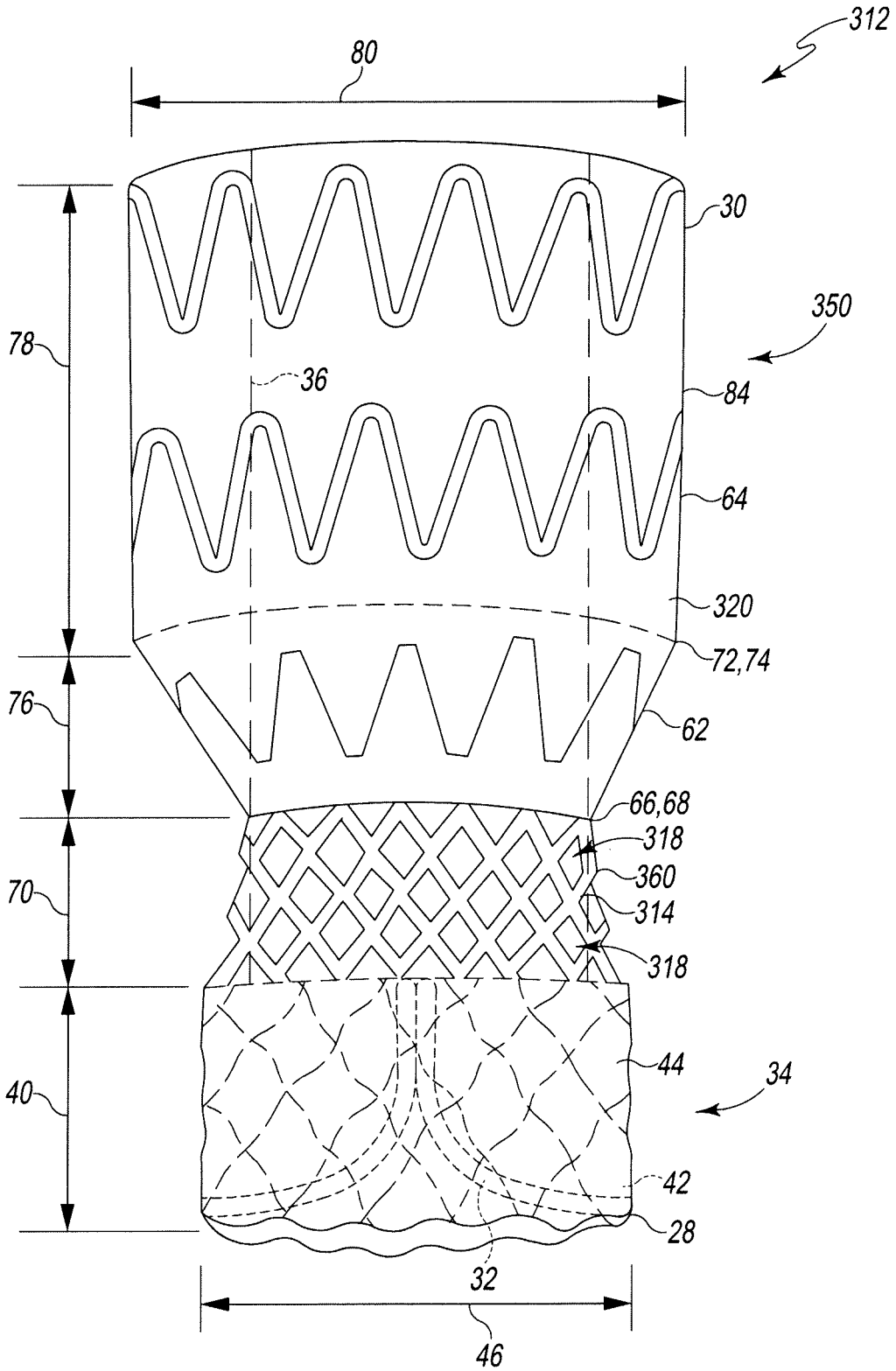
312
80
30
350
78
36
84
64
320
72,74
76
62
66,68
318
360
70
314
318
44
34
40
42
28
32
46

Fig. 17

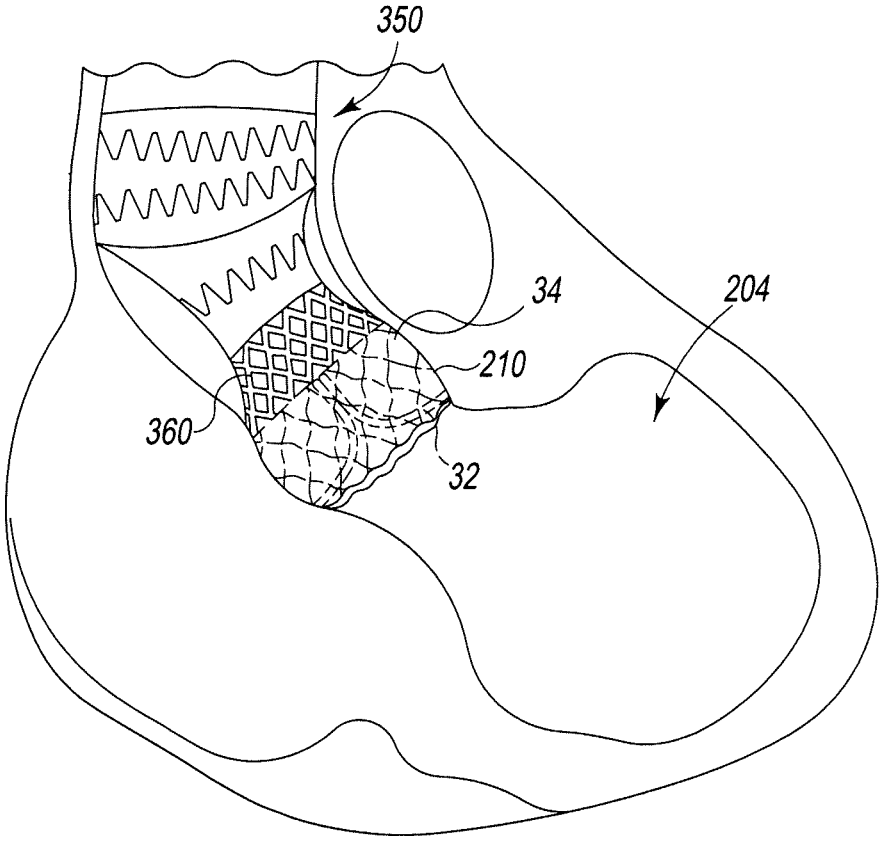

Fig. 18

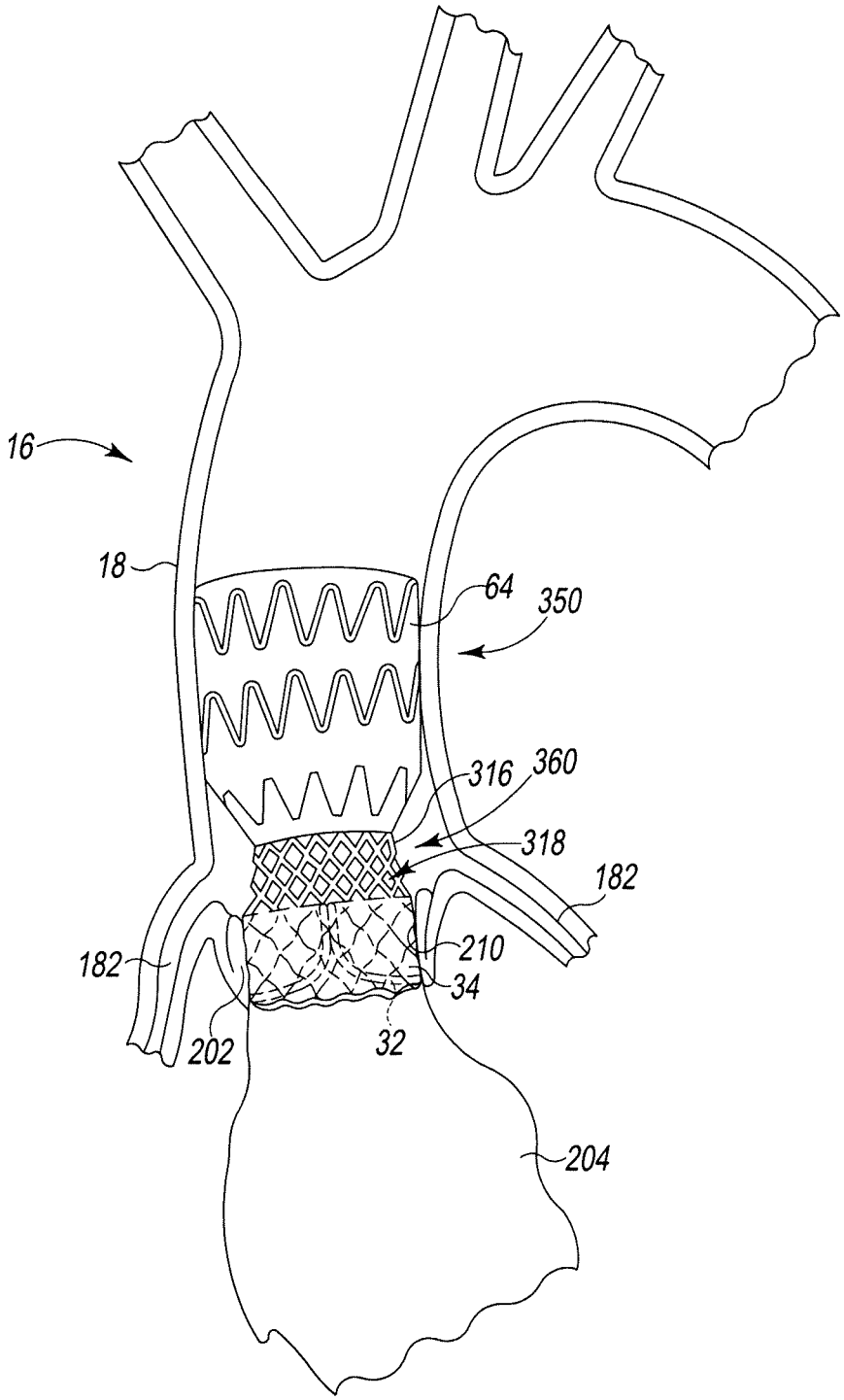

Fig. 19

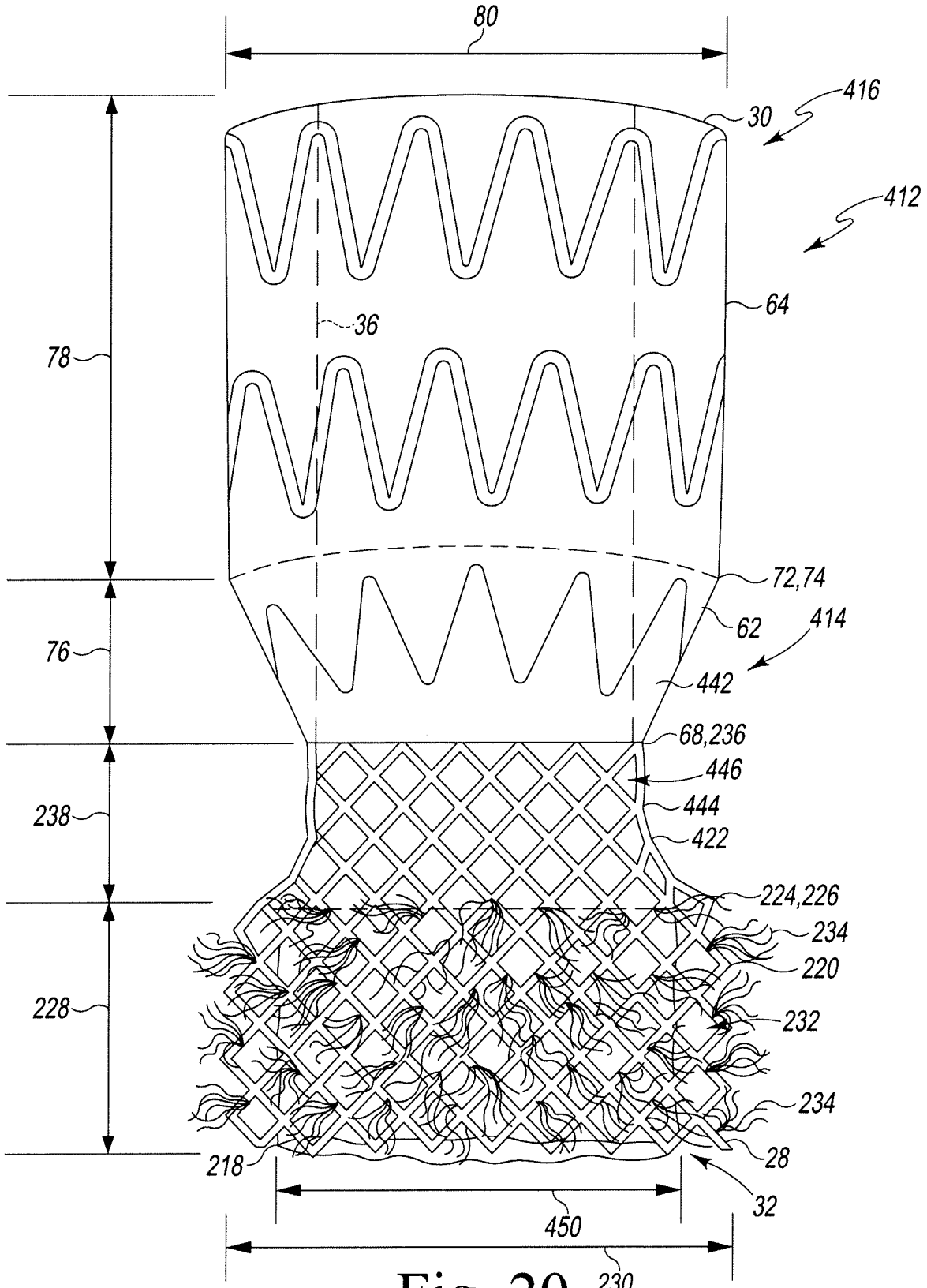
80
416
30
412
64
36
78
72,74
62
414
76
442
68,236
446
238
444
422
224,226
234
220
228
232
234
218
28
32
450
230

Fig. 20

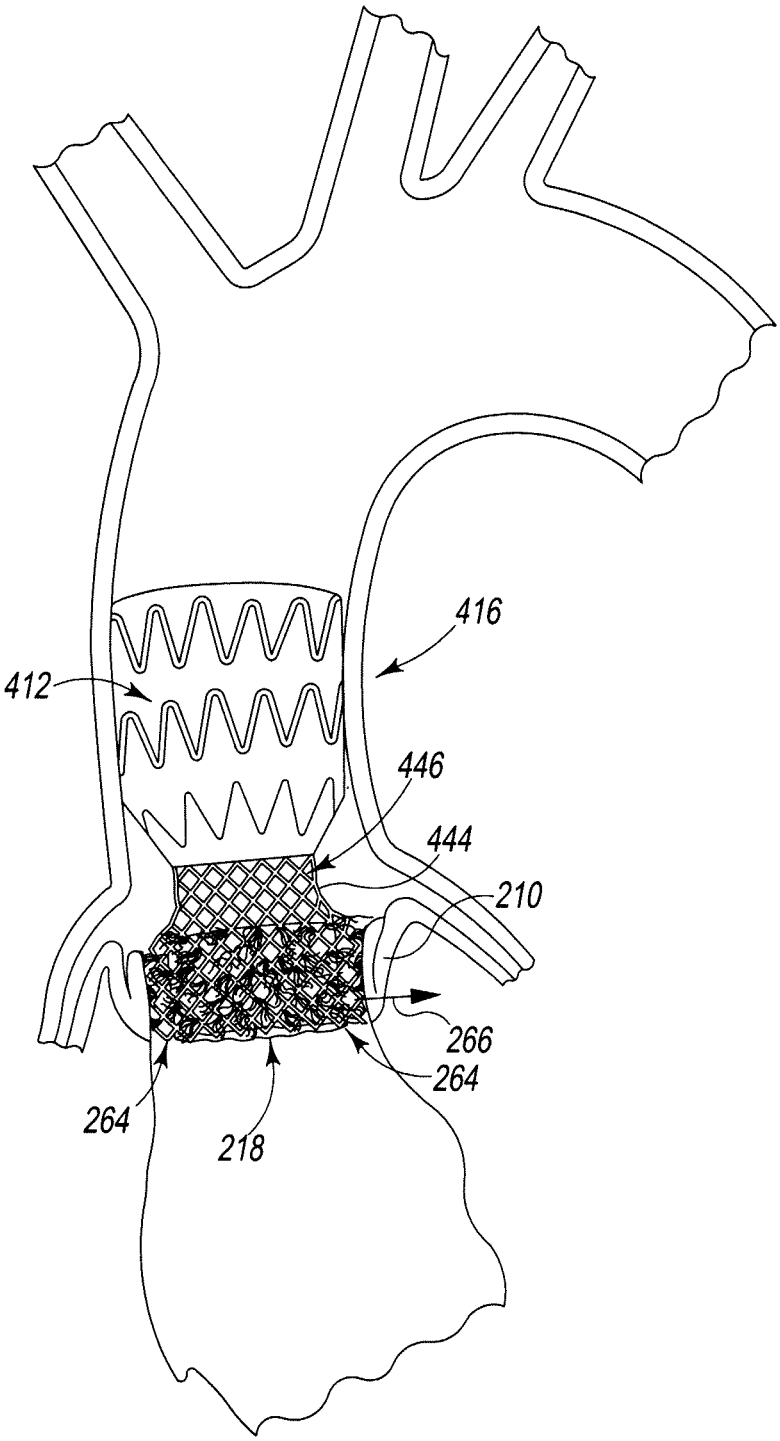

Fig. 21

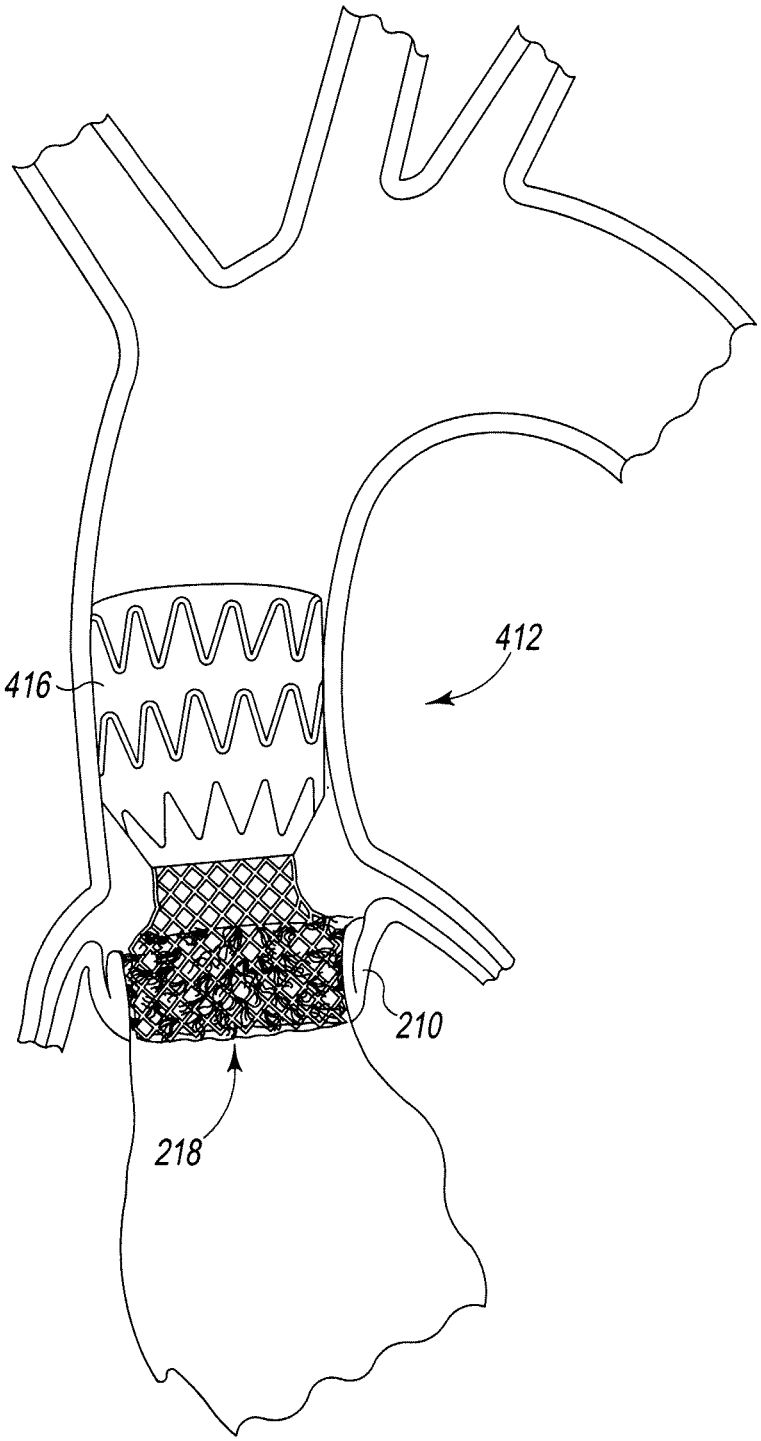

Fig. 22

TRANSCATHETER AORTIC VALVE REPAIR HAVING IMPROVED PARAVALVULAR SEAL

This application is a continuation of U.S. patent application Ser. No. 17/060,557 entitled "DEVICE FOR ENDOVASCULAR AORTIC REPAIR", which was filed on Oct. 1, 2020, which is a continuation of U.S. patent application Ser. No. 16/910,189 entitled "DEVICE FOR ENDOVASCULAR AORTIC REPAIR AND METHOD OF USING THE SAME", which was filed on Jun. 24, 2020, which is a continuation of U.S. patent application Ser. No. 16/808,137 entitled "HEART VALVE REPLACEMENT DEVICE FOR ENDOVASCULAR AORTIC REPAIR AND METHOD OF USING THE SAME", which was filed on Mar. 3, 2020 and issued as U.S. Pat. No. 10,792,172 on Oct. 6, 2020, which is a continuation of U.S. patent application Ser. No. 16/736,879 entitled "DEVICE FOR ENDOVASCULAR AORTIC REPAIR AND METHOD OF USING THE SAME", which was filed on Jan. 8, 2020, which is a continuation of U.S. patent application Ser. No. 16/042,286 entitled "DEVICE FOR ENDOVASCULAR AORTIC REPAIR AND METHOD OF USING THE SAME", which was filed on Jul. 23, 2018 and issued as U.S. Pat. No. 10,555,823 on Feb. 11, 2020, which is a continuation of U.S. patent application Ser. No. 14/614,628 entitled "Device for Endovascular Aortic Repair and Method of Using the Same", which was filed on Feb. 5, 2015 and issued as U.S. Pat. No. 10,028,848 on Jul. 24, 2018, which is a continuation of U.S. patent application Ser. No. 14/569,306 entitled "Device for Endovascular Aortic Repair and Method of Using the Same", which was filed on Dec. 12, 2014 and issued as U.S. Pat. No. 9,339,399 on May 17, 2016, which is a divisional of U.S. patent application Ser. No. 13/706,896 entitled "Device for Endovascular Aortic Repair and Method of Using the Same", which was filed on Dec. 6, 2012 and issued as U.S. Pat. No. 8,940,040 on Jan. 27, 2015, which claims the benefit under 35 U.S.C. § 119 to U.S. Provisional Application Ser. No. 61/567,458 entitled "Transcatheter Aortic Valve for Endovascular Aortic Repair", which was filed on Dec. 6, 2011. Application Ser. No. 13/706,896 also claims priority under § 119 to U.S. Provisional Application Ser. No. 61/723,446 entitled "Transcatheter Aortic Valve for Endovascular Aortic Repair", which was filed on Nov. 7, 2012. Each of the applications referenced herein are incorporated by reference in their entirety.

TECHNICAL FIELD

The present disclosure relates to a device and method of using same for endovascular aortic repair, including repair of aortic valve disease, aortic stenosis, ascending aortic aneurysms, aortic insufficiency, aortic regurgitation, ascending aneurysm, bicuspid valve disease, and/or Type A dissections.

BACKGROUND

The normal aortic root and the ascending aorta are composed of the aortic annulus, the sinuses of Valsalva, the sinutubular junction, and the tubular portion. The challenge facing practitioners of endovascular repair of ascending aortic aneurysms is that there is a very short proximal landing zone at the level of the sinutubular junction, there is variable coronary anatomy from patient to patient, and, in many cases, there is involvement of the aortic valve with either stenosis or insufficiency. Generally speaking, and as discussed in the article SURGERY INSIGHT: THE

DILATED ASCENDING AORTA—INDICATIONS FOR SURGICAL INTERVENTION, by James E. Davies and Thralf M. Sundt published in Nature Clinical Practice Cardiovascular Medicine (2007), the contents of which are incorporated herein by reference in its entirety, there are three basic types of involvement of the ascending aorta, designated as Type A, B, or C. These will be discussed in further detail below and are shown in FIGS. **1**A-**1**C, which have been reproduced from the referenced article.

Type A aneurysms are most commonly found in younger patients and patients with connective tissue disorders such as Marfan syndrome. The anatomical characteristics of Type A aneurysms are dilatation of the sinuses of Valsalva with or without dilatation of the aortic annulus. The sinutubular junction is most often dilated. The valve could be normal, stenotic or insufficient. An example of a Type A aneurysm is shown in FIG. **1**A.

The anatomical characteristics of Type B aneurysms are dilatation of the tubular portion. Initially the sinutubular junction may be normal or mildly dilated, however as the aneurysm grows, it stretches the sinutubular junction and may eventually lead to aortic insufficiency. The valve could be normal, stenotic or insufficient. The bulk of the aneurysm is at the level of the tubular aorta. An example of a Type B aneurysm is shown in FIG. **1**B.

The anatomical characteristics of Type C aneurysms are dilatation of the sinuses of Valsalva, sinutubular junction and the tubular portion of the aorta. The valve could be normal, stenotic or insufficient. Type B and C aneurysms are most commonly found in an older group of patients. An example of a Type C aneurysm is shown in FIG. **1**C.

There are devices clinically used for endovascular repair of ascending aortic aneurysms. Although transcatheter valves are a clinical reality, none in clinical use have been designed with the purpose of endovascular repair of multiple types of ascending aortic aneurysms. Indeed, a device is needed that can treat different anatomical variations of ascending aortic aneurysms, create effective proximal and distal seal zones within the aorta, and have a durable valve component, but that also allows for future valve re-interventions. A device is also needed that would allow for treatment of different coronary anatomical variations among the patient population, allow future coronary re-intervention, but that also avoids coronary compression, and enables treatment of possible paravalvular leaks.

SUMMARY

According to one aspect of the disclosure, an endograft device for endovascular repair of ascending aortic aneurysms is disclosed. The endograft device includes a first prosthetic component that has a proximal frame and a distal frame that is secured to the proximal frame and extends to a distal end of the first prosthetic component. The endograft device also includes at least one conduit that is secured to the first prosthetic component and that is positioned adjacent to the proximal frame, and a second prosthetic component that is secured to a proximal end of the first prosthetic component. The second prosthetic component includes a balloon-expandable frame extending distally from a proximal end of the second prosthetic component and a self-expanding frame that is connected to the balloon-expandable frame and extends to a distal end of the second prosthetic component. The endograft device also includes a valve element that is secured to the balloon-expandable frame at the proximal end of the second prosthetic component.

In some embodiments, the self-expanding frame may have an hourglass shape. In some embodiments, the self-expanding frame may include a first section that tapers inwardly between a proximal end and a distal end. The endograft device may also include a second section having a proximal end that is secured to the distal end of the first section. The second section may taper outwardly between the proximal end of the second section and a distal end of the second section. Additionally, in some embodiments, the proximal end of the first section may be connected to a distal end of the balloon-expandable frame.

In some embodiments, the self-expanding frame may include a third section that extends proximally from the proximal end of the first section. The third section may have a passageway defined therein, and the balloon-expandable frame may be positioned in the passageway of the third section of the self-expanding frame. In some embodiments, the balloon-expandable frame may be expandable between an unexpanded position in which an outer surface of the balloon-expandable frame is spaced apart from an inner surface of the self-expanding frame and an expanded position in which the outer surface of the balloon-expandable frame is engaged with the inner surface of the self-expanding frame.

In some embodiments, a plurality of fibers may be attached to the third section of the self-expanding frame. When the balloon-expandable frame is in the expanded position, the outer surface of the balloon-expandable frame may be engaged with the plurality of fibers.

In some embodiments, the proximal frame of the first prosthetic component may have a passageway defined therein, and the distal end of the second prosthetic component may be positioned in the passageway of the first prosthetic component.

In some embodiments, the conduit may include a pair of conduits positioned on opposite sides of the first prosthetic component. Additionally, in some embodiments, the conduit may have a proximal opening that is positioned adjacent to a proximal end of the first prosthetic component.

In some embodiments, the proximal frame may include a first section secured to the distal end of the second prosthetic component, and a second section connected to the first section. The second section may taper outward between a proximal end connected to the first section and a distal end. The conduit may have a distal opening defined in the second section of the proximal frame.

Additionally, in some embodiments, the endograft device may include a stent having a distal end positioned in the proximal opening of the at least one conduit and a proximal end configured to be positioned in a coronary artery.

In some embodiments, an outer surface of the second prosthetic component and an outer surface of the proximal frame of the first prosthetic component may be covered such that fluid is prevented from passing therethrough. Additionally, an outer surface of the distal frame of the first prosthetic component may be uncovered such that is fluid permitted to pass therethrough.

According to another aspect, a transcatheter valve is disclosed. The transcatheter valve includes a frame component having a balloon-expandable frame extending distally from a proximal end of the frame component and a self-expanding frame secured to the balloon-expandable frame. The self-expanding frame includes a first section that tapers inwardly between a proximal end and a distal end, and a second section that tapers outwardly between a proximal end secured to the distal end of the first section and a distal end. A valve element is positioned in the balloon-expandable frame at the proximal end of the frame component.

In some embodiments, the frame component may be a dual-frame component. The self-expanding frame may be an outer frame of the dual-frame component and may have a passageway defined therein. The balloon-expandable frame may be an inner frame of the dual-frame component that is positioned in the passageway defined in the self-expanding frame. Additionally, the balloon-expandable frame may be expandable between an unexpanded position in which an outer surface of the balloon-expandable frame is spaced apart from an inner surface of the self-expanding frame and an expanded position in which the outer surface of the balloon-expandable frame is engaged with the inner surface of the self-expanding frame.

In some embodiments, a plurality of fibers may be attached to the self-expanding frame. When the balloon-expandable frame is in the expanded position, the outer surface of the balloon-expandable frame may be engaged with the plurality of fibers. Additionally, in some embodiments, an outer surface of the first section of the self-expanding frame may be uncovered such that fluid is permitted to pass therethrough and an outer surface of the second section of the self-expanding frame may be covered such that fluid is prevented from passing therethrough.

In some embodiments, the self-expanding frame may include an elongated section extending distally from the second section. The elongated section may have a length that is greater than a combined length of the first section and the second section. Additionally, in some embodiments, the self-expanding frame may be covered with at least one of a collagen and hydrogel. In some embodiments, the valve element may be one of a bicuspid valve and a tricuspid valve.

According to another aspect, a method of repairing a patient's aorta is disclosed. The method includes introducing a first prosthetic component into the patient's aorta such that a proximal frame of the first prosthetic component is positioned in the ascending aorta and a distal frame of the first prosthetic component is positioned in the aortic arch of the patient's aorta, advancing a covered stent through a conduit defined in the first prosthetic component into a coronary artery of the patient's aorta, securing a second prosthetic component to a proximal end of the first prosthetic component in the patient's aorta, and expanding a proximal section of the second prosthetic component into engagement with the aortic annulus of the patient's aorta such that a valve secured to the proximal section is positioned in the aortic annulus proximal to the coronary arteries.

In some embodiments, expanding the proximal section of the second prosthetic component may include operating a balloon-expandable frame. Additionally, in some embodiments, expanding the proximal section of the second prosthetic component may include permitting a self-expanding frame to expand into engagement with the aortic annulus, and operating the balloon-expandable frame may include advancing an outer surface of the balloon-expandable frame into engagement with an inner surface of the self-expanding frame after the self-expanding frame is engaged with the aortic annulus.

In some embodiments, operating the balloon-expandable frame may include advancing an outer surface of the balloon-expandable frame into engagement with the aortic annulus.

In some embodiments, an outer surface of the second prosthetic component and an outer surface of the proximal frame of the first prosthetic component may be covered such

that fluid is prevented from passing therethrough. Additionally, an outer surface of the distal frame of the first prosthetic component may be uncovered such that is permitted to pass therethrough.

In some embodiments, introducing the first prosthetic component into the patient's aorta and advancing the covered stent through the conduit defined in the first prosthetic component into the coronary artery of the patient's aorta may be performed during a first surgical procedure. In some embodiments, securing the second prosthetic component to the proximal end of the first prosthetic component and expanding the proximal section of the second prosthetic component into engagement with the aortic annulus of the patient's aorta may be performed during a second surgical procedure different from the first surgical procedure.

In some embodiments, the method may also include introducing the second prosthetic component into the ascending aorta prior to introducing the first prosthetic component.

BRIEF DESCRIPTION OF THE DRAWINGS

Embodiments of the present disclosure will now be described by way of example in greater detail with reference to the attached figures, in which:

FIG. **1** is an illustrative aorta;

FIG. **1**A is an example of a Type A aneurysm;

FIG. **1**B is an example of a Type B aneurysm;

FIG. **1**C is an example of a Type C aneurysm;

FIG. **2** is partial cutaway view of an aorta with an embodiment of an endovascular prosthetic device implanted therein;

FIG. **3** is an elevation view of a proximal prosthetic component of the endovascular prosthetic device of FIG. **2**;

FIG. **4** is an elevation view of a distal prosthetic component of the endovascular prosthetic device of FIG. **2**;

FIG. **5** is a cross sectional view of the distal prosthetic component of FIG. **4** taken along the line **5-5** in FIG. **4**;

FIG. **6** is a partial cutaway view of the aorta with the distal prosthetic component of FIG. **3** implanted therein;

FIG. **7** is a view similar to FIG. **6** showing stents extending from the distal prosthetic component;

FIG. **8** is an elevation view of another embodiment of a proximal prosthetic component of the endovascular prosthetic device of FIG. **2**;

FIG. **9** is an elevation view of a self-expanding outer frame of the proximal prosthetic component of FIG. **8**;

FIG. **10** is an elevation view of a balloon-expandable inner frame of the proximal prosthetic component of FIG. **8**;

FIG. **11** is a perspective view a proximal end of the proximal prosthetic component of FIG. **8**;

FIG. **12** is a cross-sectional elevation view of the proximal prosthetic component of FIG. **8** taken along the line **12-12** in FIG. **11**;

FIG. **13** is a plan view of the proximal prosthetic component of FIG. **8** showing the inner frame in an unexpanded position;

FIG. **14** is a plan view similar to FIG. **13** showing the inner frame in an expanded position;

FIG. **15** is a partial cutaway view of the aorta with the distal prosthetic component of FIG. **4** secured to the proximal prosthetic component of FIG. **8**;

FIG. **16** is a view similar to FIG. **15** showing the inner frame in an expanded position;

FIG. **17** is an embodiment of a transcatheter valve device similar to the proximal prosthetic component of FIG. **3**;

FIGS. **18-19** are partial cutaway views of the aorta with the transcatheter valve of FIG. **17** implanted therein;

FIG. **20** is another embodiment of a transcatheter valve device similar to the proximal prosthetic component of FIG. **8**; and

FIGS. **21-22** are partial cutaway views of the aorta with the transcatheter valve of FIG. **20** implanted therein.

DETAILED DESCRIPTION OF THE DRAWINGS

While the concepts of the present disclosure are susceptible to various modifications and alternative forms, specific exemplary embodiments thereof have been illustrated by way of example in the drawings and will herein be described in detail. It should be understood, however, that there is no intent to limit the concepts of the present disclosure to the particular forms disclosed, but on the contrary, the intention is to cover all modifications, equivalents, and alternatives falling within the spirit and scope of the invention as defined by the appended claims.

Terms representing anatomical references, such as anterior, posterior, medial, lateral, superior, inferior, distal, proximal, etcetera, may be used throughout the specification in reference to the orthopaedic implants and surgical instruments described herein as well as in reference to the patient's natural anatomy. Such terms have well-understood meanings in both the study of anatomy and the field of orthopaedics. Use of such anatomical reference terms in the written description and claims is intended to be consistent with their well-understood meanings unless noted otherwise. For example, the term "proximal" refers to the direction that is generally closest to the heart, and the term "distal" refers to the direction that is generally furthest from the heart.

Referring to FIGS. **2-16**, exemplary designs of an endovascular prosthetic device or endograft device **10** (hereinafter device **10**) are shown. The device **10** is intended for the treatment of most ascending aortic aneurysms and is configured to treat any type of ascending aneurysm regardless of involvement of the aortic valve and the sinuses of Valsalva. As described in greater detail below, the device **10** permits future coronary and aortic valve interventions as well as extension of a fenestrated/branch graft into the aortic arch. Part of the device **10** may also be modified and used as a transcatheter valve, as described in greater detail below in regard to FIGS. **17-22**. Such a valve may be introduced transfemorally or through the subclavian artery or the apex of the heart.

Referring now to FIGS. **2-7**, the device **10** includes a proximal component **12** that is attached to a distal component **14**. As shown in FIG. **2**, the distal component **14** may be secured to the proximal component **12** when implanted into a patient's aorta **16**. When implanted, the proximal component **12** is positioned in the patient's ascending aorta **18**, while the distal component **14** extends distally into the arch **20** of the patient's aorta **16**. The distal component **14** includes a pair of "Endo-cabrol conduits" or conduits **22**, and each conduit **22** is sized to receive a catheter or stent **24** for coronary blood flow, as described in greater detail below. The device **10** is configured to treat all ascending aneurysms with or without dilated sinutubular junctions and aortic valve disease.

As shown in FIG. **3**, the proximal component **12** includes a frame **26** that extends from a proximal end **28** to a distal end **30**. The frame **26** is attached to a valve **32** (shown in phantom), which is positioned at the proximal end **28** of the component **12**. In the illustrative embodiment, the valve **32** is configured as a bicuspid valve. It should be appreciated

that in other embodiments the valve **32** may be tricuspid or quadracuspid. The valve **32** may be constructed from treated bovine pericardium or other suitable proven biological or synthetic material. When the proximal component **12** is implanted into the patient's aorta **16**, the valve **32** replaces the aortic valve and permits fluid (i.e., blood) to selectively pass from the heart and into a passageway **36** extending through the proximal component **12**.

The valve **32** is housed in a balloon-expandable frame **34** of the frame **26**. As shown in FIG. **3**, the balloon-expandable frame **34** is embodied as a balloon-expandable stent **38** that extends distally from the proximal end **28** of the component **12** and has a length **40** of approximately 15 mm. In other embodiments, the stent **38** may be longer or shorter depending on, for example, the patient's anatomy. The stent **38** is tubular and is constructed of a metallic material, such as, nitinol, stainless steel, or other implant grade metallic material, in an open-cell configuration. It should be appreciated that in other embodiments the stent **38** may be formed from a polymeric material and may be formed in, for example, a Z-stent configuration. In the illustrative embodiment, the outer surface **42** of the stent **38** is covered with low-profile polyester, ePTFE, or other nonporous covering material **44** that prevents fluid from passing through the outer surface **42**. However, it should be appreciated that the stent **38** may be covered with standard polyester or other nonporous materials.

As shown in FIG. **3**, the stent **38** of the balloon-expandable frame **34** has a diameter **46**. As described in greater detail below, the balloon-expandable frame **34** is expandable during implantation from an unexpanded diameter (not shown) to the expanded diameter **46**. In the illustrative embodiment, the expanded diameter **46** is equal to approximately 26 mm when the frame **34** is expanded. In other embodiments, the expanded diameter may be greater than or less than 26 mm depending on, for example, the patient's anatomy. Examples of balloon-expandable stents are described in U.S. Pat. No. 5,102,417 entitled "Expandable Intraluminal Graft, and Method and Apparatus for Implanting an Expandable Intraluminal Graft" by Julio C. Palmaz and U.S. Pat. No. 6,582,462 entitled "Valve Prosthesis for Implantation in the Body and a Catheter for Implanting Such Valve Prosthesis" by Henning Rud Andersen et al., which are expressly incorporated herein by reference. In the illustrative embodiment, the diameter **46** is oversized relative to the diameter of the aortic annulus **210** (see FIG. **1**) such that an interference fit is created between the stent **38** and the annulus **210** when the component **12** is implanted and the stent **38** is expanded, as described in greater detail below.

The balloon-expandable frame **34** is attached to a self-expanding frame **50**. In the illustrative embodiment, the distal end **52** of the balloon-expandable frame **34** is secured to the proximal end **54** of the frame **50** by stitching or sewing the frames **34**, **50** together, thereby forming the frame **26** of the component **12**. It should be appreciated that in other embodiments the frames **34**, **50** may be secured together via welding or other fasteners. The frames **34**, **50** may also be formed as a single, monolithic frame.

As shown in FIG. **3**, the self-expanding frame **50** has a generally hourglass shape and is formed from a metallic material, such as, nitinol, stainless steel, or other implant grade metallic material. It should be appreciated that in other embodiments the frame **50** may be formed from a polymeric material. The frame **50** includes an inwardly tapered proximal section **60**, an outwardly tapered middle section **62**, and an elongated distal section **64**. The section **60** includes the proximal end **54** of the frame **50** and has a distal end **66** connected to the proximal end **68** of the outwardly tapered middle section **62**. The section **60** tapers inwardly between the ends **54**, **66** from approximately 26 mm at the end **54** to approximately 22 mm at the end **66**. In the illustrative embodiment, the proximal section **60** has a length **70** of approximately 10 mm. It should be appreciated that in other embodiments the dimensions of the section **60** may vary depending on, for example, the patient's anatomy.

The outwardly tapered middle section **62** of the self-expanding frame **50** has the proximal end **68** and a distal end **72** connected to the proximal end **74** of the elongated distal section **64**. The section **62** tapers outwardly from a diameter of approximately 22 mm at the end **68** to a diameter of approximately 28 mm at the end **72**. In the illustrative embodiment, the middle section **62** has a length **76** of approximately 10 mm. In other embodiments, the dimensions of the section **62** may vary depending on, for example, the patient's anatomy. Among other things, the tapered sections **60**, **62** of the proximal component **12** permit the placement of the stents **24** that extend from the distal component **14** to the coronary arteries, as described in greater detail below.

The elongated distal section **64** of the self-expanding frame **50** extends distally from the proximal end **74** to the distal end **30** of the component **12**. In the illustrative embodiment, the section **64** has a length **78** that is greater than the combined length of the tapered sections **60**, **62**. In one particular non-limiting example, the length **78** of the elongated distal section **64** is approximately 25 mm and has a diameter **80** of approximately 28 mm. In other embodiments, the dimensions of the section **64** may vary depending on, for example, the patient's anatomy. In one exemplary embodiment, the distal section **64** may taper between the proximal end **74** and the distal end **30**.

As shown in FIG. **3**, the proximal section **60** of the self-expanding frame **50** is formed in an open-cell stent configuration, and the sections **62**, **64** are formed in a Z-stent configuration. It should be appreciated that in other embodiments the sections **60**, **62**, **64** may be formed in a single configuration, including an open-cell stent configuration or Z-stent configuration. The sections **60**, **62**, **64** may also be formed as a single monolithic component. The outer surface **82** of the self-expanding frame **50** is covered with low profile polyester, ePTFE, or other nonporous covering material **84** such that fluid is prevented from passing through the surface **82**. In that way, the entire outer surface of the component **12** is covered to prevent fluid from passing therethrough. The covering material **84** immediately distal to the balloon-expandable frame **34** is equipped with a "trap door" **86**, which may be opened to permit the passage of one or more surgical instruments for embolization of possible paravalvular leaks. The entire outer surface of component **12** may be also covered with low-profile Dacron or other synthetic material. It should also be appreciated that all or part of the component **12** may be covered with hydrogel or other sealing material.

As described above, the device **10** also includes a distal component **14**, which is secured to the distal end **30** of the proximal component **12** when the device **10** is implanted in the patient's aorta **16**. Referring now to FIG. **4**, the distal component **14** includes a frame **100** that extends from a proximal end **102** configured to be secured to the proximal component **12** to a distal end **104**. The frame **100** has a passageway **106** defined therein, which extends through the ends **102**, **104** of the component **14**. The passageway **106** has a diameter **108** and is sized to receive the distal end **30** of the proximal component **12** when the device **10** is assembled.

In the illustrative embodiment, the components **12**, **14** are secured together via an interference fit between the frame **100** and the distal end **30** of the proximal component **12**. Specifically, the diameter **108** of the passageway **106** is less than the diameter **80** of the proximal component **12**. In the illustrative embodiment, the diameter **108** is equal to approximately 26 mm. It should be appreciated that in other embodiments the components **12**, **14** may be secured together via stitching or other fastening means.

As shown in FIG. **4**, the component **14** includes a proximal frame **110** that is connected to an elongated distal frame **112**. The proximal frame **110** and the distal frame **112** are formed from metallic materials, such as, nitinol, stainless steel, or other implant grade metallic materials. It should be appreciated that in other embodiments the frames **110**, **112** may be formed from a polymeric material. The proximal frame **110** is formed in a Z-stent configuration, and the distal frame **112** is formed in an open-cell configuration. Each of the frames **110**, **112** is self-expanding. In the illustrative embodiment, the distal frame **112** is secured to the distal end **114** of the proximal frame **110** by stitching or sewing the frames **110**, **112** together. It should be appreciated that in other embodiments the frames **110**, **112** may be secured together via welding or other fasteners. The frames **110**, **112** may also be formed as a single, monolithic frame.

The proximal frame **110** has an outer surface **120** that is covered with low profile polyester, ePTFE, or other nonporous covering material **122**. As a result, fluid is prevented from passing through the surface **120**. The distal frame **112** is uncovered such that fluid is permitted to pass through the openings **124** formed therein.

As shown in FIG. **4**, the proximal frame **110** includes a proximal section **126**, an outwardly tapered section **128** extending distally from the proximal section **126**, and an elongated distal section **130**. The proximal section **126** includes the proximal end **102** of the component **14** and has a distal end **132** connected to the proximal end **134** of the outwardly tapered section **128**. In the illustrative embodiment, the proximal section **126** has a length **136** of approximately 25 mm. It should be appreciated that in other embodiments the dimensions of the section **126** may vary depending on, for example, the patient's anatomy.

The tapered section **128** of the frame **110** has the proximal end **134** and a distal end **140** connected to the proximal end **142** of the elongated distal section **130**. The section **128** tapers outwardly from a diameter of approximately 26 mm at the end **132** to a diameter between approximately 44 mm and 48 mm at the end **140**. In the illustrative embodiment, the tapered section **128** has a length **146** of approximately 10 mm. It should be appreciated that in other embodiments the dimensions of the section **128** may vary depending on, for example, the patient's anatomy.

The elongated distal section **130** of the frame **110** extends distally from the proximal end **142** to the distal end **114** of the frame **110**. In the illustrative embodiment, the section **130** has a length **150**. In one particular non-limiting example, the length **150** of the elongated distal section **130** is approximately 20 mm. The section **130** also has a diameter **152** of between approximately 44 mm and 48 mm. In other embodiments, the dimensions of the section **130** may vary depending on, for example, the patient's anatomy.

As described above, the distal component **14** also includes a pair of conduits **22**, which are connected to the proximal frame **110**. Each conduit **22** has a distal end **160** secured to the tapered section **128** of the frame **110** and a proximal end **162** positioned adjacent to the proximal end **102** of the component **12**. As shown in FIG. **4**, the conduit **22** does not extend beyond the proximal end **102** of the component **12**. Each conduit **22** has a passageway **164** that extends through the ends **160**, **162** and is sized to receive a stent **24**.

The passageway **164** has a proximal opening **166** defined in the end **162**. The opening **166** has a diameter **168** that in the exemplary embodiment is equal to approximately 5 mm. As shown in FIG. **5**, the passageway **164** has a distal opening **170** that is defined in the end **160** and the tapered section **128** of the frame **110**. The distal opening **170** has a diameter **172** that is greater than the diameter **168**. In the illustrative embodiment, the diameter **172** is equal to approximately 8 mm. The passageway **164** measures approximately 8 mm in diameter over a distance **174** of approximately 5 mm and tapers smoothly into the approximately 5 mm diameter **168** at a junction **176**. The passageway **164** maintains the diameter **168** between the junction **176** and the proximal opening **166**. In the illustrative embodiment, the passageway **164** has a length **180** of approximately 2 cm between the junction **176** and the proximal opening **166**.

Each conduit **22** is wire reinforced and allows for passage of catheters or stents **24** and easier cannulation of the coronary ostia, regardless of deployment orientation. This configuration allows stenting of the coronary arteries **182** (see FIG. **1**) prior to the deployment of component **12**, as described in greater detail below. In the illustrative embodiment, the tapered section **128** permits the uncompromised passage of stents **24** into the coronary arteries **182** in such a way that the stents are not compressed between the sinutubular junction and the device **10** itself.

As shown in FIG. **4**, the elongated distal frame **112** of the component **14** extends distally from the distal end **114** of the frame **110** to the distal end **104** of the component **14**. In the illustrative embodiment, the frame **112** has a length **190**. In one particular non-limiting example, the length **190** of the elongated frame **112** is approximately 10 cm, which is sufficient to cover the arch **20** of the aorta **18** when implanted therein. In other embodiments, the dimensions of the frame **112** may vary depending on, for example, the patient's anatomy. The distal frame **112** permits the accurate deployment of component **14** without compromising the circulation to supra-aortic branches. It also allows for cannulation of the supra-aortic branches, if placement of a fenestrated/branch arch device is necessary.

To implant the device **10** in the patient's aorta **16**, a surgeon may obtain open exposure or percutaneous access to the common femoral artery. The iliac arteries or an iliac conduit may also be used. After obtaining access and placing a stiff wire in the ascending aorta **18**, the device **10** and the delivery system are prepared. In the illustrative embodiment, the delivery system is composed of a 100-105 cm hydrophilic sheath. As shown in FIG. **6**, the distal component **14** is delivered first. After performing a lateral oblique thoracic aortogram, the component **14** is deployed such that the distal end **114** of the proximal frame **110** is positioned proximal to the innominate artery **200**, thereby ensuring that the distal openings **170** of the conduits **22** are at 12 and 6 o'clock positions in relationship to the innominate artery **200**.

Using the contralateral common femoral artery wires, standard coronary guide catheters are introduced through the distal frame **112** of the component **14** into each conduit **22**. The conduits **22** may then be cannulated with the catheters prior to insertion of the stents **24**. Alternatively, the conduits **22** may be pre-cannulated. Using the catheters, access is obtained to the right and left coronary arteries **182**. The stents **24** are advanced into the passageways **164** through the distal openings **170** and out of the conduits **22** to bridge the arteries **182** and the conduits **22**, as shown in FIG. **7**. In that

way, each artery **182** is connected to its respective conduit **22**. Each stent **24** is covered and may be embodied as a balloon-expandable stent or a self-expanding stent. It should be appreciated that coronary artery bypasses may be performed to the right and left coronary systems prior to the placement of the component **14**.

The proximal component **12** may be deployed after the implantation of the distal component **14**. The components **12**, **14** may be deployed in a single surgical procedure taking place on a single day or the component **14** may be deployed in one procedure, and the component **12** may be deployed in another, separate procedure at a later date. As shown in FIG. **1**, the proximal component **12** is deployed into the position across the native aortic valve **202**.

To do so, a stiff wire is passed through the aortic valve **202** into the left ventricle **204**. The delivery system for the proximal component **12** is passed through the valve **202**. An example of a delivery system is described in U.S. Pat. No. 5,102,417 entitled "Expandable Intraluminal Graft, and Method and Apparatus for Implanting an Expandable Intraluminal Graft" by Julio C. Palmaz, which is incorporated herein by reference. When the delivery system is in position, the proximal component **12** is released by unsheathing the system, thereby permitting expansion of the self-expanding frame **50**. As described above, the self-expanding frame **50** engages the proximal end **102** of the distal component **14** to secure the components **12**, **14** together and seal the distal end **30** of the component **12** within the distal component **14**. As shown in FIG. **2**, the proximal end **28** of the proximal component **12** is positioned in the aortic annulus, and the hour-glass shape of the component **12** provides a space for the native aortic valve leaflets such that the leaflets are not pressed against or over the openings of coronary arteries **182**.

The balloon-expandable frame **34** may be now deployed by inflating the balloon within the delivery system. This deploys the frame **34** to the predetermined expanded diameter **46** and advances the frame **34** into engagement with the aortic annulus **210**, thereby sealing the aortic annulus **210** such that fluid is permitted to pass from the left ventricle **204** only through the valve **32**. As shown FIG. **1**, the valve **32** is positioned in the aortic annulus **210** proximal to the coronary arteries **182**. It should be appreciated that the deployment of the component **12** may be performed during rapid ventricular pacing (RVP). In cases with aortic stenosis, the valve **32** may be dilated with balloon angioplasty prior to the introduction of the proximal component **12**.

Referring now to FIGS. **8-16**, another embodiment of a proximal component **212** of the device **10** is shown. Some features of the embodiment illustrated in FIGS. **8-16** are substantially similar to those described above in reference to the embodiment of FIGS. **1-7**. Such features are designated in FIGS. **8-16** with the same reference numbers as those used in FIGS. **1-7**. Similar to the proximal component **12** of FIGS. **1-7**, the proximal component **212** may be secured to the distal component **14** when implanted into a patient's aorta **16**. When implanted, the proximal component **212** is positioned in the patient's ascending aorta **18**, while the distal component **14** extends distally into the arch **20** of the patient's aorta **16**.

As shown in FIG. **8**, the proximal component **212** includes a dual-frame **214** that extends from a proximal end **28** to a distal end **30**. The frame **214** is attached to a valve **32** (shown in phantom), which is positioned at the proximal end **28** of the component **212**. In the illustrative embodiment, the valve **32** is configured as a bicuspid valve. It should be appreciated that in other embodiments the valve **32** may be tricuspid or quadracuspid. The valve **32** may be constructed from treated bovine pericardium or other suitable proven biological or synthetic material. When the proximal component **212** is implanted into the patient's aorta **16**, the valve **32** replaces the aortic valve and permits fluid (i.e., blood) to selectively pass from the heart and into a passageway **36** extending through the proximal component **212**.

The dual-frame **214** of the proximal component **212** includes a self-expanding outer frame **216** and a balloon-expandable inner frame **218** that is secured to the self-expanding outer frame **216** and houses the valve **32**. Referring now to FIG. **9**, the self-expanding outer frame **216** has a generally hourglass shape and is formed from a metallic material, such as, nitinol, stainless steel, or other implant grade metallic material. It should be appreciated that in other embodiments the outer frame **216** may be formed from a polymeric material. The outer frame **216** includes an elongated proximal section **220**, an inwardly tapered section **222**, an outwardly tapered middle section **62**, and an elongated distal section **64**.

The elongated proximal section **220** of the outer frame **216** includes the proximal end **28** of the component **212** and has a distal end **224** connected to a proximal end **226** of the inwardly tapered section **222**. The proximal section **220** is embodied as a tubular stent. It should be appreciated that in other embodiments the section **220** may be shaped as a prism, cone, or other geometric shape depending on the patient's anatomy.

In the illustrative embodiment, the proximal section **220** has a length **228** that is equal to approximately 15 mm. The proximal section **220** also has a diameter **230** of approximately 32 mm. It should be appreciated that in other embodiments the dimensions of the frame **216** may vary according to the anatomy of the patient. In the illustrative embodiment, the diameter **230** is oversized relative to the diameter of the aortic annulus **210** such that an interference fit is created between the proximal section **220** and the annulus **210** when the component **212** is implanted, as described in greater detail below. As shown in FIG. **9**, the proximal section **220** defines a passageway **232** in the outer frame **216**.

In the illustrative embodiment, collagen fibers **234** are attached to the proximal section **220** to aid in preventing paravalvular leaks and migration of the proximal component **212** within the aortic walls. The fibers **234** extend outwardly from the proximal section **220** and inwardly into the passageway **232**. It should be appreciated that in other embodiments the outer frame **216** may be covered with hydrogel or other sealing materials. In other embodiments, a plurality of barbs or hooks may be attached to the proximal section **220**. The hooks may be configured to further engage the tissue of the aorta and inhibit or prevent migration of the device **10**.

The inwardly tapered section **222** of the outer frame **216** includes the proximal end **226** and has a distal end **236** connected to the proximal end **68** of the outwardly tapered middle section **62**. The section **222** tapers inwardly between the ends **226**, **236** from approximately 32 mm at the end **226** to approximately 22 mm at the end **236**. In the illustrative embodiment, the inwardly tapered section **222** has a length **238** of approximately 10 mm.

The outwardly tapered middle section **62** of the self-expanding frame **216** has the proximal end **68** and a distal end **72** connected to the proximal end **74** of the elongated distal section **64**. The section **62** tapers outwardly from a diameter of approximately 22 mm at the end **68** to a diameter of approximately 28 mm at the end **72**. In the illustrative

embodiment, the middle section **62** has a length **76** of approximately 10 mm. In other embodiments, the dimensions of the section **62** may vary depending on, for example, the patient's anatomy.

The elongated distal section **64** of the self-expanding frame **216** extends distally from the proximal end **74** to the distal end **30** of the component **212**. In the illustrative embodiment, the section **64** has a length **78** that is greater than the combined length of the tapered sections **60**, **62**. In one particular non-limiting example, the length **78** of the elongated distal section **64** is approximately 30 mm and has a diameter **80** of approximately 34 mm. In other embodiments, the dimensions of the section **64** may vary depending on, for example, the patient's anatomy. In one exemplary embodiment, the distal section **64** may taper between the proximal end **74** and the distal end **30**.

As shown in FIG. **9**, the proximal section **220** and the inwardly tapered section **222** of the self-expanding frame **216** are formed in an open-cell stent configuration, and the sections **62**, **64** are formed in a Z-stent configuration. It should be appreciated that in other embodiments the sections **62**, **64**, **220**, **222** may be formed in a single configuration, including an open-cell stent configuration or Z-stent configuration. The sections **62**, **64**, **220**, **222** may also be formed as a single monolithic component. The outer surface **240** of the sections **62**, **64**, **222** are covered with low profile polyester, ePTFE, or other nonporous covering material **242** such that fluid is prevented from passing through the surface **240**. The covering material **242** immediately distal to the proximal section **220** is equipped with a "trap door" **86**, which may be opened to permit the passage of one or more surgical instruments for embolization of possible paravalvular leaks. The outer surface **240** of the sections **62**, **64**, **222** may be also covered with low-profile Dacron or other synthetic material. It should also be appreciated that all or part of the frame **216** may be covered with hydrogel or other sealing material.

As described above, the outer frame **216** of the dual-frame **214** is secured to a balloon-expandable inner frame **218**, which is positioned in the passageway **232**. As shown in FIG. **10**, the frame **218** houses the valve **32**. The balloon-expandable frame **218** is embodied as a balloon-expandable tubular stent **244** that has a length **246** of approximately 15 mm. In other embodiments, the stent **244** may be longer or shorter depending on, for example, the patient's anatomy. The stent **244** is tubular and is constructed of a metallic material, such as, nitinol, stainless steel, or other implant grade metallic material, in an open-cell configuration. It should be appreciated that in other embodiments the stent **244** may be formed from a polymeric material and may be formed in, for example, a Z-stent configuration. In the illustrative embodiment, the outer surface **248** of the stent **244** is covered with low-profile polyester, ePTFE, or other nonporous covering material **250** that prevents fluid from passing through the outer surface **248**. However, it should be appreciated that the stent **244** may be covered with standard polyester, ePTFE or other nonporous materials.

As shown in FIG. **10**, the stent **244** of the inner frame **218** has a diameter **252**. As described in greater detail below, the balloon-expandable frame **218** is expandable during implantation from an unexpanded diameter (not shown) to the expanded diameter **252**. In the illustrative embodiment, the expanded diameter **252** is equal to approximately 26 mm when the inner frame **218** is expanded. In other embodiments, the expanded diameter may be equal to, or greater than, the diameter **230** of the proximal section **220** of the outer frame **216**. In the illustrative embodiment, the expanded diameter **252** is oversized relative to the diameter of the aortic annulus **210** such that an interference fit is created between the proximal section **220** and the annulus **210** when the component **212** is implanted, and the inner frame **218** is expanded, as described in greater detail below.

Referring now to FIG. **11**, the inner frame **218** of the dual-frame component **214** is secured to the outer frame **216** via a plurality of stitches **260**. It should be appreciated that in other embodiments soldering, welding or other fasteners may be used to secure the inner frame **218** to the outer frame **216**. As shown in FIGS. **11-14**, the inner frame **218** and the valve component **32** are positioned in the passageway **232** defined in the self-expanding frame **216**. When the inner frame **218** is unexpanded, the outer surface **248** of the stent **244** is spaced apart from the fibers **234** attached to the outer frame **216**. In the illustrative embodiment, a gap **264** is defined therebetween, and the gap **264** has a magnitude of about 2 mm to about 3 mm.

As shown in FIG. **14**, the balloon-expandable inner frame **218** may be expanded in the direction indicated by arrows **266**. As described above, the diameter **230** of the proximal section **220** of the outer frame **216** is oversized relative to the diameter of the aortic annulus **210**. As such, when the component **212** is implanted, the proximal section **220** is reduced to the diameter of the annulus **210**. Because the expanded diameter **252** of the stent **244** is greater than the diameter of the annulus, the outer surface **248** of the stent **244** engages the fibers **234** (and hence the inner surface of the proximal section **220** of the outer frame **216**) through the covering material **250**. In that way, the gap **264** is closed, and the fibers **234** and the covering material **250** create a seal between the inner frame **218** and the outer frame **216**.

To implant an endograft device **10** that includes proximal component **212** in the patient's aorta **16**, a surgeon may obtain open exposure or percutaneous access to the common femoral artery. The surgeon may then implant the distal component **14** in the manner described above in regard to FIGS. **1-7** and advance the stents **24** into position in the arteries **182**. The proximal component **212** may be deployed after the implantation of the distal component **14**. To do so, a stiff wire is passed through the aortic valve **202** into the left ventricle **204**. The delivery system for the proximal component **212** is then passed through the valve **202**.

When the delivery system is in position, the proximal component **212** is released by unsheathing the system, thereby permitting expansion of the self-expanding frame **216**. The self-expanding frame **216** engages the proximal end **102** of the distal component **14** to secure the components **212**, **14** together and seal the distal end **30** of the component **212** within the distal component **14**.

When the frame **216** is unsheathed, the proximal section **220** expands into engagement with the aortic annulus **210**, thereby creating an interference fit between the frame **216** and the annulus **210** and stabilizing the device **10** in place. As shown in FIG. **15**, the inner frame **218** is initially unexpanded within the outer frame **216**. The inner frame **218** may be deployed by expanding the balloon assembly. Expansion of the balloon-expandable inner frame **218** engages the inner frame **218** with the outer frame **216** and compresses the collagen fiber/hydrogel coated proximal section **220** of the outer frame **216** against the aortic annulus **210**. As shown in FIG. **16**, the combined engagement of the frames **216**, **218** seals the annulus **210** and the paravalvular areas, and thus, prevents paravalvular leakage. As such, fluid is permitted to pass from the left ventricle **204** only through the valve **32** of the component **212**. As shown FIGS. **15-16**, the valve **32** is positioned in the aortic annulus **210** proximal

to the coronary arteries **182**. It should be appreciated that the deployment of the component **212** may be performed during rapid ventricular pacing (RVP). In cases with aortic stenosis, the valve **32** may be dilated with balloon angioplasty prior to the introduction of the proximal component **212**.

In each of the embodiments described above, the self-expanding frame portion of proximal components **12**, **212** significantly improves the accuracy and control of the deployment of the device **10**. The bicuspid configuration of the valve **32** serves three distinct purposes, including (1) by reducing the number of valve commissures to two, the profile will be reduced, (2) the valve **32** may conform better to the aortic annulus, and (3) when the annulus is asymmetrical, the incidence of aortic insufficiency may be reduced.

Referring now to FIGS. **17-22**, the proximal component **12** or the proximal component **212** may be used as a transcatheter valve with slight modification. Such a valve may be deployed via a transfemoral or trans-axillary route, as will be described in further detail below.

Referring now to FIGS. **17-19**, one embodiment of a transcatheter valve component **312** is shown. Some features of the embodiment illustrated in FIGS. **17-19** are substantially similar to those described above in reference to the proximal component **12** of FIGS. **1-7**. Such features are designated in FIGS. **17-19** with the same reference numbers as those used in FIGS. **1-7**. Similar to the proximal component **12** of FIGS. **1-7**, the transcatheter valve component **312** includes a frame **26** that extends from a proximal end **28** to a distal end **30**. The frame **326** is attached to a valve **32** (shown in phantom), which is positioned at the proximal end **28** of the valve component **312**. When the valve component **312** is implanted into the patient's aorta **16**, the valve **32** replaces the aortic valve and permits fluid (i.e., blood) to selectively pass from the heart and into a passageway **36** extending through the valve component **312**.

The valve **32** is housed in a balloon-expandable frame **34** of the frame **26**. As shown in FIG. **17**, the balloon-expandable frame **34** is embodied as a balloon-expandable stent **38** that extends distally from the proximal end **28** of the transcatheter valve component **312** and has a length **40** of approximately 15 mm. In other embodiments, the stent **38** may be longer or shorter depending on, for example, the patient's anatomy. The stent **38** is tubular and is constructed of a metallic material, such as, nitinol, stainless steel, or other implant grade metallic material, in an open-cell configuration. It should be appreciated that in other embodiments the stent **38** may be formed from a polymeric material and may be formed in, for example, a Z-stent configuration. In the illustrative embodiment, the outer surface **42** of the stent **38** is covered with low-profile polyester, ePTFE, or other nonporous covering material **44** that prevents fluid from passing through the outer surface **42**. However, it should be appreciated that the stent **38** may be covered with standard polyester, ePTFE or other nonporous materials.

As shown in FIG. **17**, the stent **38** of the balloon-expandable frame **34** has a diameter **46**. As described in greater detail below, the balloon-expandable frame **34** is expandable during implantation from an unexpanded diameter (not shown) to the expanded diameter **46**. In the illustrative embodiment, the expanded diameter **46** is equal to approximately 26 mm when the frame **34** is expanded. In other embodiments, the expanded diameter may be greater than or less than 26 mm depending on, for example, the patient's anatomy. In the illustrative embodiment, the diameter **46** is oversized relative to the diameter of the aortic annulus **210** such that an interference fit is created between the stent **38** and the annulus **210** when the transcatheter valve component **312** is implanted.

The balloon-expandable frame **34** is attached to a self-expanding frame **350**. In the illustrative embodiment, the distal end **52** of the balloon-expandable frame **34** is secured to the proximal end **54** of the frame **350** by stitching or sewing the frames **34**, **350** together, thereby forming the frame **26** of the transcatheter valve component **312**. It should be appreciated that in other embodiments the frames **34**, **350** may be secured together via welding or other fasteners. The frames **34**, **350** may also be formed as a single, monolithic frame.

As shown in FIG. **17**, the self-expanding frame **350** has a generally hourglass shape and is formed from a metallic material, such as, nitinol, stainless steel, or other implant grade metallic material. It should be appreciated that in other embodiments the frame **350** may be formed from a polymeric material. The frame **350** includes an inwardly tapered proximal section **360**, an outwardly tapered middle section **62**, and an elongated distal section **64**. The section **360** includes the proximal end **54** of the frame **350** and has a distal end **66** connected to the proximal end **68** of the outwardly tapered middle section **62**. The section **360** tapers inwardly between the ends **54**, **66** from approximately 26 mm at the end **54** to approximately 22 mm at the end **66**. In the illustrative embodiment, the proximal section **360** has a length **70** of approximately 15 mm.

The outwardly tapered middle section **62** of the self-expanding frame **350** has the proximal end **68** and a distal end **72** connected to the proximal end **74** of the elongated distal section **64**. The section **62** tapers outwardly from a diameter of approximately 22 mm at the end **68** to a diameter of approximately 28 mm at the end **72**. In the illustrative embodiment, the middle section **62** has a length **76** of approximately 10 mm. In other embodiments, the dimensions of the section **62** may vary depending on, for example, the patient's anatomy.

The elongated distal section **64** of the self-expanding frame **350** extends distally from the proximal end **74** to the distal end **30** of the valve component **312**. In the illustrative embodiment, the section **64** has a length **78** that is greater than the combined length of the tapered sections **60**, **62**. In one particular non-limiting example, the length **78** of the elongated distal section **64** is approximately 30 mm and has a diameter **80** of approximately 34 mm. In other embodiments, the dimensions of the section **64** may vary depending on, for example, the patient's anatomy. In one exemplary embodiment, the distal section **64** may taper between the proximal end **74** and the distal end **30**.

As shown in FIG. **3**, the proximal section **360** of the self-expanding frame **350** is formed in an open-cell stent configuration, and each of the sections **62**, **64** is formed in a Z-stent configuration. It should be appreciated that in other embodiments the sections **360**, **62**, **64** may be formed in a single configuration, including the open-cell stent configuration, mesh-like stent configuration, or Z-stent configuration. The sections **60**, **62**, **64** may also be formed as a single monolithic component.

As shown in FIG. **17**, the outer surface **314** of the proximal section **360** of the frame **350** is uncovered such that fluid is permitted to pass through the openings **318**. The outer surface **316** of the sections **62**, **64** are covered with low profile polyester, ePTFE, or other nonporous covering material **84** such that fluid is prevented from passing through the surface **320**. The outer surface **320** of the valve component **312** may also be covered with low-profile Dacron or other synthetic material. The uncovered, open cell stent section

360 is configured to allow for coronary artery perfusion. The covered sections 62, 64 serve to stabilize the valve component 312 against the aorta 18 and provide a docking station to ascending aortic extensions or fenestrated/branch arch grafts. The covered sections 62, 64 would also permit endograft extension of the valve component 312 for suitable type B aneurysms without dilation of the sinutubular junction.

The delivery of the transcatheter valve component 312 may begin by gaining access to the left ventricle across the native aortic valve. An ascending aortogram may be performed to locate the right and left coronary arteries. An over the wire introducer system, including a guidewire, is used to introduce the valve component 312 into the aorta 18. After the guidewire has been placed into the left ventricle 204 via the iliofemoral, subclavian, or carotid vessels, the valve component 312 may be delivered through the common femoral artery and passed across the native aortic valve 202. After performing an angiogram to delineate the location of the coronary arteries 182, the valve component 312 is released by unsheathing the delivery system, thereby permitting expansion of the self-expanding frame 350, as shown in FIGS. 18-19.

The balloon-expandable frame 34 may be now deployed by inflating the balloon within the delivery system. This deploys the frame 34 to the predetermined expanded diameter 46 and advances the frame 34 into engagement with the aortic annulus 210, thereby sealing the aortic annulus 210 such that fluid is permitted to pass from the left ventricle 204 only through the valve 32 and the valve 32 is positioned in the aortic annulus 210 proximal to the coronary arteries 182, as shown in FIGS. 18-19. The openings 318 of the uncovered section 360 of the valve component 312 permit blood flow to the coronary arteries 182 for promote circulation. It should be appreciated that the deployment of the valve component 312 may be performed during rapid ventricular pacing (RVP).

Referring now to FIGS. 20-22, another embodiment of a transcatheter valve component (hereinafter valve component 412) is shown. Some features of the embodiment illustrated in FIGS. 20-22 are substantially similar to those described above in reference to the proximal component 212 of FIGS. 8-16. Such features are designated in FIGS. 20-22 with the same reference numbers as those used in FIGS. 8-16. Similar to the proximal component 212 of FIGS. 8-16, the valve component 412 includes a dual-frame 414 that extends from a proximal end 28 to a distal end 30. The frame 414 is attached to a valve 32 (shown in phantom), which is positioned at the proximal end 28 of the component 412. In the illustrative embodiment, the valve 32 is configured as a bicuspid valve. When the valve component 412 is implanted into the patient's aorta 16, the valve 32 replaces the aortic valve and permits fluid (i.e., blood) to selectively pass from the heart and into a passageway 36 extending through the valve component 412.

The dual-frame 414 includes a self-expanding outer frame 416 and a balloon-expandable inner frame 218 that is secured to the self-expanding outer frame 416 and houses the valve 32. Referring now to FIG. 9, the self-expanding outer frame 416 has a generally hourglass shape and is formed from a metallic material, such as, nitinol, stainless steel, or other implant grade metallic material. It should be appreciated that in other embodiments the outer frame 416 may be formed from a polymeric material. The outer frame 416 includes an elongated proximal section 220, an inwardly tapered section 422, an outwardly tapered middle section 62, and an elongated distal section 64.

The elongated proximal section 220 of the outer frame 416 includes the proximal end 28 of the component 412 and has a distal end 224 connected to a proximal end 226 of the inwardly tapered section 222. The proximal section 220 is embodied as a tubular stent. It should be appreciated that in other embodiments the section 220 may be shaped as a prism, cone, or other geometric shape depending on the patient's anatomy.

In the illustrative embodiment, the proximal section 220 has a length 228 that is equal to approximately 15 mm. The proximal section 220 also has a diameter 230 of approximately 32 mm. It should be appreciated that in other embodiments the dimensions of the frame 416 may vary according to the anatomy of the patient. In the illustrative embodiment, the diameter 230 is oversized relative to the diameter of the aortic annulus 210 such that an interference fit is created between the proximal section 220 and the annulus 210 when the valve component 412 is implanted, as described in greater detail below. As shown in FIG. 9, the proximal section 220 defines a passageway 232 in the outer frame 416.

In the illustrative embodiment, collagen fibers 234 are attached to the proximal section 220 to aid in preventing paravalvular leaks and migration of the valve component 412 within the aortic walls. The fibers 234 extend outwardly from the proximal section 220 and inwardly into the passageway 232. It should be appreciated that in other embodiments the outer frame 216 may be covered with hydrogel or other sealing materials. In other embodiments, a plurality of barbs or hooks may be attached to the proximal section 220. The hooks may be configured to further engage the tissue of the aorta and inhibit or prevent migration of the device 10.

The inwardly tapered section 422 of the outer frame 416 includes the proximal end 226 and a distal end 236 connected to the proximal end 68 of the outwardly tapered middle section 62. The section 422 tapers inwardly between the ends 226, 236 from approximately 32 mm at the end 226 to approximately 22 mm at the end 236. In the illustrative embodiment, the inwardly tapered section 422 has a length 238 of approximately 10 mm.

The outwardly tapered middle section 62 of the self-expanding frame 416 has the proximal end 68 and a distal end 72 connected to the proximal end 74 of the elongated distal section 64. The section 62 tapers outwardly from a diameter of approximately 22 mm at the end 68 to a diameter of approximately 28 mm at the end 72. In the illustrative embodiment, the middle section 62 has a length 76 of approximately 10 mm. In other embodiments, the dimensions of the section 62 may vary depending on, for example, the patient's anatomy.

The elongated distal section 64 of the self-expanding frame 416 extends distally from the proximal end 74 to the distal end 30 of the component 412. In the illustrative embodiment, the section 64 has a length 78 that is greater than the combined length of the tapered sections 60, 62. In one particular non-limiting example, the length 78 of the elongated distal section 64 is approximately 30 mm and has a diameter 80 of approximately 34 mm. In other embodiments, the dimensions of the section 64 may vary depending on, for example, the patient's anatomy. In one exemplary embodiment, the distal section 64 may taper between the proximal end 74 and the distal end 30.

As shown in FIG. 20, each of the proximal section 220 and the inwardly tapered section 422 of the self-expanding frame 416 is formed in an open-cell stent configuration, and each of the sections 62, 64 is formed in a Z-stent configuration. It should be appreciated that in other embodiments

the sections **62**, **64**, **220**, **422** may be formed in a single configuration, including the open-cell stent configuration, mesh-like stent configuration, or Z-stent configuration. The sections **62**, **64**, **220**, **422** may also be formed as a single monolithic component. The outer surfaces **440** of the sections **62**, **64** are covered with low profile polyester, ePTFE, or other nonporous covering material **442** such that fluid is prevented from passing through the surface **440**. The outer surface **444** of the section **422** is uncovered such that fluid is permitted to pass through openings **446** defined in the surface **444**. The uncovered, open cell section **422** is configured to allow for coronary artery perfusion. The covered sections **62**, **64** serve to stabilize the valve component **412** against the aorta **18** and provide a docking station to ascending aortic extensions or fenestrated/branch arch grafts.

As described above, the outer frame **416** of the dual-frame **414** is secured to a balloon-expandable inner frame **218**, which is positioned in the passageway **232** and houses the valve **32**. As described above, the balloon-expandable frame **218** is expandable during implantation from an unexpanded diameter **450** to the expanded diameter (not shown).

To deploy the valve component **412**, a stiff wire is passed through the aortic valve **202** into the left ventricle **204**. The delivery system for the valve component **412** is then passed through the valve **202**. When the delivery system is in position, the valve component **412** is released by unsheathing the system, thereby permitting expansion of the self-expanding frame **416**. The proximal section **220** of the frame **416** expands into engagement with the aortic annulus **210**, thereby creating an interference fit between the frame **416** and the annulus **210** and stabilizing the valve component **412** in place. As shown in FIG. **21**, the inner frame **218** is initially unexpanded within the outer frame **416**. The inner frame **218** may be deployed by expanding the balloon assembly. Expansion of the balloon-expandable inner frame **218** engages the inner frame **218** with the outer frame **416** and compresses the collagen fiber/hydrogel coated proximal section **220** of the outer frame **416** against the aortic annulus **210**.

As shown in FIG. **22**, the combined engagement of the frames **218**, **416** seals the annulus **210** and the paravalvular areas, and thus, prevents paravalvular leakage. As such, fluid is permitted to pass from the left ventricle **204** only through the valve **32** of the component **412**. The openings **446** of the uncovered section **422** of the valve component **412** permit blood flow to the coronary arteries **182** for promote circulation.

It should be appreciated that the design of components **12**, **14**, **212** and the transcatheter valves **312**, **412** has intentionally taken into account the potential failure modes and allows for correction of any such failure modes. For example, with respect to components **12**, **14**, **212**, paravalvular leaks may be corrected. More specifically, with respect to a paravalvular leak (type Ia endoleak), leakage around the valve **32** would act as a type 1a endoleak. The trapdoors **86** in components **12**, **312** would allow for coil embolization of the area of the leak. Two trapdoors at 180 degree location would allow access to the entire area above the aortic annulus. Since the coronary arteries **182** are protected by the conduits **22** in the distal component **14**, coil embolization of this area would not compromise the coronary blood flow. Coil embolization of paravalvular leaks are already being performed clinically after heart valve surgery if there are additional leaks around the valve.

Aortic insufficiency (AI) after implantation may also be corrected. Significant AI has been documented in up to 17% of patients after transcatheter valve implantation. Except heavy annular calcification, the tricuspid morphology of the current valves and the ovoid shape of the aortic annulus can cause malcoaptation of the valve leaflets causing AI. The bicuspid valve nature of the designs discussed herein potentially eliminates the problem with malcoaptation and AI secondary to that.

Structural valve degeneration may also be corrected. More specifically, the bicuspid valve design allows for placement of another transcatheter valve across the first device without compromising valvular flow area.

Coronary insufficiency may also be corrected. The Cabrol endo-conduits **22** in conjunction with the tapered section **128** of component **14** ensure uninterrupted coronary blood flow. By first deploying the component **14**, the surgeon will be able to work through the Cabrol conduits **22** and using standard catheters and guidewires to cannulate the right and left coronary arteries. Stents **24** are deployed from the coronary arteries into the Cabrol conduits **22**. Deployment the component **12** or component **212** may be delayed until coronary blood flow is secured. The tapered design will mitigate the risk of compression of the coronary stents between the device **10** and the aortic wall.

For the transcatheter valves **312**, **412**, paravalvular leaks may also be corrected in that the open cell midsections **360**, **422** of the valve allow the cannulation and stenting of the coronary arteries with potential coil embolization of the leak after the protection of the coronary artery if necessary.

Structural valve degeneration in the transcatheter valves **312**, **412** may be corrected in that the bicuspid valve design permit for placement of another transcatheter valve across the first device without compromising valvular flow area.

The dual frame component may also take the form of other transcatheter valvular replacement devices such as, for example, prosthetic mitral and tricuspid valves. The dual frame component may also be used to enhance sealing zones of endovascular devices to treat abdominal and thoracic aneurysms, and in applications to treat peripheral vascular disease.

It will be appreciated that the devices and methods described herein have broad applications. The foregoing embodiments were chosen and described in order to illustrate principles of the methods and apparatuses as well as some practical applications. The preceding description enables others skilled in the art to utilize methods and apparatuses in various embodiments and with various modifications as are suited to the particular use contemplated. In accordance with the provisions of the patent statutes, the principles and modes of operation of this disclosure have been explained and illustrated in exemplary embodiments.

It is intended that the scope of the present methods and apparatuses be defined by the following claims. However, it must be understood that this disclosure may be practiced otherwise than is specifically explained and illustrated without departing from its spirit or scope. It should be understood by those skilled in the art that various alternatives to the embodiments described herein may be employed in practicing the claims without departing from the spirit and scope as defined in the following claims.

The scope of the disclosure should be determined, not with reference to the above description, but should instead be determined with reference to the appended claims, along with the full scope of equivalents to which such claims are entitled. It is anticipated and intended that future developments will occur in the arts discussed herein, and that the disclosed systems and methods will be incorporated into such future examples. Furthermore, all terms used in the

claims are intended to be given their broadest reasonable constructions and their ordinary meanings as understood by those skilled in the art unless an explicit indication to the contrary is made herein. In particular, use of the singular articles such as "a," "the," "said," etc. should be read to recite one or more of the indicated elements unless a claim recites an explicit limitation to the contrary. It is intended that the following claims define the scope of the disclosure and that the method and apparatus within the scope of these claims and their equivalents be covered thereby. In sum, it should be understood that the disclosure is capable of modification and variation and is limited only by the following claims.

The invention claimed is:

1. A transcatheter aortic valve assembly comprising:

an outer frame formed from a metallic material;

an inner frame that engages a prosthetic heart valve having prosthetic leaflets, wherein the inner frame includes a cylindrically extending polymeric inner graft covering extending at least partially radially outwardly of the prosthetic heart valve and radially inwardly of the outer frame for providing sealing to the prosthetic heart valve,

wherein the outer frame is secured to the inner graft covering by stitching;

a first portion of fibers positioned radially outwardly of the outer frame that is configured to form a first sealing interface against the annulus and native valve leaflets of the patient when the first portion of fibers is compressed thereagainst, wherein the first portion of fibers extend radially outwardly of the outer frame,

wherein the first portion of fibers is non-metallic; and

a second portion of fibers carried by the outer frame that is configured to form a second sealing interface against the outer frame when the second portion of fibers is compressed thereagainst,

wherein the second portion of fibers is non-metallic,

wherein the first portion of fibers and the second portion of fibers are in overlapping radial alignment,

wherein the transcatheter aortic valve is configured to be positioned in a patient so that the first sealing interface is in overlapping radial alignment with native valve leaflets of the aorta to seal thereagainst,

wherein the valve assembly is free of an outer graft covering between the first portion of fibers and the outer frame,

wherein the valve assembly has a radially compressed orientation and a radially expanded orientation,

wherein the valve assembly is balloon expandable to the radially expanded orientation and,

wherein expansion of the valve assembly is configured to compress the first portion of fibers and the second portion of fibers to form the respective first sealing interface and second sealing interface.

2. The valve assembly according to claim **1**, wherein the inner graft covering extends to the proximal inflow end of the outer frame, wherein, stitching extending between the inner graft covering and through the outer frame secures the inner graft covering to the proximal inflow end of the outer frame.

3. The valve assembly of claim **1**, wherein the first portion of fibers defines an opening extending through a thickness thereof that is created by spacing formed between adjacent fibers.

4. The valve assembly of claim **1**, wherein the second portion of fibers defines an opening extending through a thickness thereof that is created by spacing formed between adjacent fibers, wherein the opening extends to the outer frame.

* * * * *