IN THE UNITED STATES DISTRICT COURT
FOR THE DISTRICT OF DELAWARE

AORTIC INNOVATIONS LLC,	)	
	)	
Plaintiff,	)	
	)	
v.	)	**C.A. NO. 1-23--CV-00158 (JPM)**
	)	
EDWARDS LIFESCIENCES CORPORATION,	)	**JURY TRIAL DEMANDED**
EDWARDS LIFESCIENCES LLC, AND	)	
EDWARDS LIFESCIENCES (U.S.) INC.,	)	
	)	
Edwards.		

DECLARATION OF DR. STEPHEN J.D. BRECKER REGARDING CLAIM CONSTRUCTION

TABLE OF CONTENTS

I. QUALIFICATIONS 1

II. COMPENSATION 3

III. PRIOR TESTIMONY 4

IV. MATERIALS CONSIDERED 4

V. CLAIM CONSTRUCTION PRINCIPLES 4

VI. SUMMARY OF OPINIONS 5

VII. PERSON OF ORDINARY SKILL IN THE ART 7

VIII. PRIOR CLAIM CONSTRUCTIONS IN THE AORTIC I MATTER 8

IX. THE PATENTS-IN-SUIT 9

- A. Technical Background 9
- B. ’834 Patent 14
  - 1. Asserted Claims 14
  - 2. Prosecution History 16
- C. ’310 Patent 17
  - 1. Asserted Claims 17
  - 2. Prosecution History 18
- D. ’033 Patent 19
  - 1. Asserted Claims 19
  - 2. Prosecution History 20
- E. ’634 Patent 21
  - 1. Asserted Claims 21
  - 2. Prosecution History 23
- F. ’918 Patent 24
  - 1. Asserted Claims 24
  - 2. Prosecution History 27
- G. Claim Terms 28
  - 1. “Frame” 28

2. “Fibers” 34
3. “Plurality of fibers” 38
4. “Sealing material”/“Sealing assembly” 40
5. “Second plurality of fibers”/”Second layer” 43
6. “Spacing(s)” 46
7. “Distinct layers” 51
8. “Outwardly extending fibers”/”Outwardly extending” 52
9. “Apices” Terms 55
X. RESERVATION OF RIGHTS 57

DECLARATION OF DR. STEPHEN J.D. BRECKER REGARDING CLAIM CONSTRUCTION

I, Stephen J.D. Brecker, declare under penalty of perjury as follows:

1. I submit this Declaration to provide relevant background information regarding the technology at issue in U.S. Patent Nos. 11,337,834 ("the '834 Patent"), 11,389,310 ("the '310 Patent"), 11,491,033 ("the '033 Patent"), 11,497,634 ("the '634 Patent"), and 11,523,918 ("the '918 Patent") and to set forth my opinions about the meaning of certain identified claim terms in this patent from the perspective of a person of ordinary skill in the pertinent field.

I. QUALIFICATIONS

2. The following is a brief summary of my background and qualifications. My background and qualifications are more fully set out in my curriculum vitae (CV) that I include as Appendix A.

3. I am an interventional cardiologist with a special interest in adult structural heart disease and valvular intervention. I have over 25 years of medical experience as a practicing interventional cardiologist. I am a Consultant Cardiologist at St. George's University Hospitals in London, U.K. and Professor of Cardiology at St. George's University of London. I have completed a six-year term as Chief of Cardiology at these institutions. I have now, in addition, been appointed as Consultant Cardiologist to Mayo Clinic Healthcare London. I have performed over fifteen hundred transcatheter aortic valve replacement ("TAVR") procedures.

4. I graduated from St. Thomas' Hospital Medical School, London in 1984. Subsequently, I completed senior house officer posts at the Hammersmith Hospital, St. Thomas' Hospital, the Brompton Hospital, and the National Hospital for Nervous Diseases. I then completed registrar training in cardiology at St. Thomas' Hospital and the London Chest Hospital,

before taking up a British Heart Foundation Junior Research Fellowship at the Royal Brompton Hospital. I was also a visiting fellow at Johns Hopkins Hospital, Baltimore, before becoming a Consultant Cardiologist and Honorary Senior Lecturer at St. George's in 1996. I am now Professor of Cardiology and Consultant Cardiologist at St. George's University Hospitals.

5. I have proctored over 600 TAVR procedures in which I assist and teach other physicians how to perform TAVR. I have been and remain a Global proctor for Medtronic since 2010 at approximately 80 centers worldwide, including over 50 medical centers in the USA for the US Pivotal Trial of the Corevalve product. I have also proctored the TAVR procedure in the UK, Denmark, Belgium, Japan, India, Israel, Holland, Austria, Greece, Thailand, Vietnam, Singapore, Sri Lanka and South Korea.

6. I have performed TAVR procedures with Medtronic's Corevalve EvolutR, Evolut PRO and Evolut PRO+products, as well as Boston Scientific's Lotus product and Edwards' Sapien products.

7. I have been active in the field of TAVR as a clinician, researcher, teacher, and innovator, and I have performed over 1,500 percutaneous TAVR procedures since 2007.

8. I have been a practising cardiologist since 1996 and I am aware of the technological advances since then.

9. I have experience, since 1996, of looking after cardiology patients with thoracic and abdominal aortic aneurysms and have over more than 20 years, worked closely with our vascular team in their management. St. George's Vascular Surgery are considered international leaders in this field and have carried out many of the pivotal clinical trials in this area. I refer these patients for assessment and treatment and look after them before and after. On a daily basis I have always interacted with our vascular team and discussed cross-over technologies between our

subspecialties. I have implanted covered coronary stents and peripheral stent grafts (probably around 30 procedures for management of iliofemoral perforations following TAVR procedures since 2007).

10. I am a named inventor on one patent, describing a specific TAVR guidewire, acquired by Medtronic.

11. I am a Fellow of the Royal College of Physicians, the European Society of Cardiology, the American College of Cardiology, the British Cardiovascular Society, and the British Cardiovascular Intervention Society.

12. I am the author or co-author of four books, 16 book chapters, and more than 130 peer-reviewed articles

13. In my professional experience, I have become familiar with many problems faced by cardiologists, surgeons, and medical device engineers, in transcatheter aortic valve replacement and related topics.

14. A detailed record of my professional qualifications is set forth in the attached Exhibit A, which is my curriculum vitae, including a list of publications, awards, and professional activities. A list of cases in which I have testified as an expert during the previous four years is set forth in the attached Exhibit B.

II. COMPENSATION

15. I am being compensated for my time spent on this matter at the rate of $800 per hour, plus reasonable expenses. My compensation is not related to the outcome of this action and I have no financial interest in this case.

III. PRIOR TESTIMONY

16. A list of cases in which I have testified as an expert during the previous four years is provided as Exhibit B.

IV. MATERIALS CONSIDERED

17. In preparing this declaration, I considered lists of terms needing claim construction proposed by Edwards and Aortic, as well as the ’834, ’310, ’033, ’634, and ’918 Patents, their prosecution histories, the parties’ claim construction disclosures and evidence, the Court’s claim construction orders in the *Aortic I* matter, and the other materials identified in this declaration. I also relied upon my over 25 years of experience in the field of interventional cardiology, though the testimony I offer is from the perspective of a person of ordinary skill as I have defined it below.

18. In addition, I reviewed my prior declarations, in the *Aortic I* matter and those provided in connection with IPR2021-01584 (’011 patent); IPR2021-01527 (’172 patent); IPR2022-00034 (’846 patent); IPR2022-00193 (’538 patent); IPR2022-00549 (’735 patent); IPR2022-00556 (’236 patent); and IPR2023-01151 (’834 patent). These declarations are incorporated herein by reference.

V. CLAIM CONSTRUCTION PRINCIPLES

19. I understand that claim construction is the process by which a court determines, as a matter of law, the scope and meaning of terms used in the claims of a patent. I further understand that the goal of this process is to give claim terms the ordinary and customary meaning they would have had to a POSA as of the effective filing date, after reading the entire patent and prosecution history.

20. I further understand that it is possible that the patent specification may reveal a special definition given to a claim term by the patentee that differs from the meaning it would

otherwise have to a POSA. In such cases, I understand that the patentee's definition usually controls.

21. I understand that the prosecution history of a patent can inform the meaning of some claim language and must be taken into account in construing the claims.

22. I understand that, in some cases, the court may consider extrinsic evidence, such as technical dictionaries, treatises, and expert opinions, to understand the underlying technology and the way in which claim terms would be understood by a POSA at the relevant time. However, such extrinsic evidence should not be used to vary, contradict, expand, or limit the claim language from how it is defined in the specification or prosecution history.

23. I understand that a patent claim may be held invalid for indefiniteness if the claim, viewed in light of the specification and prosecution history, fails to inform with reasonable certainty those skilled in the art about the scope of the invention. I further understand that definiteness is to be evaluated from the perspective of someone with skill in the relevant art at the time the invention.

VI. SUMMARY OF OPINIONS

24. I understand that Aortic Innovations, LLC filed the present lawsuit against Edwards Lifesciences Corporation, Edwards Lifesciences LLC, and Edwards Lifesciences (U.S.) Inc., (collectively Edwards) and alleges infringement of U.S. Patent Nos. 11,337,834 ("the '834 Patent"), 11,389,310 ("the '310 Patent"), 11,491,033 ("the '033 Patent"), 11,497,634 ("the '634 Patent"), and 11,523,918 ("the '918 Patent") (collectively, "patents-in-suit").

25. I have been asked to provide my opinions regarding the meaning of the following terms appearing in the '834, '310, '033, '634, and '918 Patents to a person of ordinary skill in the art as of the effective filing date:

- “frame”
- “fibers”
- “plurality of fibers”
- “sealing material”
- “sealing assembly”
- “second plurality of fibers”
- “second layer”
- “spacing(s)”
- “distinct layers”
- “end of the apices of the frame that are most proximal are uncovered by the fibers and the graft covering such that an end of the most proximal apices of the frame extends more proximally than a most proximal one of the plurality of fibers”
- “end of the most proximal apices of the frame are uncovered by sealing material and the graft covering, wherein the end of the most proximal apices of the frame extends more proximally than a proximal end of the sealing material”
- “outwardly extending fibers”
- “outwardly extending”

26. If called as a witness to testify at a claim construction hearing, I expect to testify on one or more the following topics and provide opinions and testimony on what is summarized in this declaration and any responsive declaration that I provide such as:

- The level of ordinary skill in the art to which the ’834, ’310, ’033, ’634, and ’918 Patents are directed.
- The ’834, ’310, ’033, ’634, and ’918 Patents (including their specification and claims), prosecution histories, and the technology underlying what is disclosed in the ’834, ’310, ’033, ’634, and ’918 Patents.
- My opinions on how the terms identified above would have been interpreted by a person of ordinary skill in the art as of the effective filing date.

VII. PERSON OF ORDINARY SKILL IN THE ART

27. My opinions in this declaration are based on the understandings of a person of ordinary skill in the art, which I understand is sometimes referred to as an “ordinary artisan” or by the acronyms “POSA” or “POSITA” as of the time of the invention. I understand that Aortic has asserted that the time of the invention is November 7, 2012, the filing date of provisional application 61/723,446. For the purposes of this declaration, I will use this date as the time of the invention of the ’834, ’310, ’033, ’634, and ’918 Patents. I understand that the person of ordinary skill in the art is a hypothetical person who is presumed to have known the relevant art at the time of the invention. By “relevant,” I mean relevant to the asserted claims of the ’834, ’310, ’033, ’634, and ’918 Patents.

28. I understand that factual indicators of the level of ordinary skill in the art include the various prior art approaches employed, the types of problems encountered in the art, the rapidity with which innovations are made, the sophistication of the technology involved, and the educational background of those actively working in the field. I understand that, in assessing the level of skill of a person of ordinary skill in the art, one should consider the type of problems encountered in the art, the prior solutions to those problems found in the prior art references, the

rapidity with which innovations are made, the sophistication of the technology, the level of education of active workers in the field, and my own experience working with those of skill in the art at the time of the invention.

29. In view of the aforementioned indicators and types of problems confronting TAVRs with respect to endovascular delivery and paravalvular leakage, I believe the level of ordinary skill would be an interventional cardiologist with experience implanting, researching or designing TAVRs in the 2010-2012 timeframe. *See* IPR2023-01151, Ex. 2002 [Brecker Declaration] at 13-15.

30. Based on my background, training, and experience, I believe that I am a person of ordinary skill in the relevant art, and have been since at least the invention date of the ’834, ’310, ’033, ’634, and ’918 Patents. Further, my opinions as stated in this declaration are valid even if the Court adopts a slightly different level of ordinary skill in the art.

VIII. PRIOR CLAIM CONSTRUCTIONS IN THE AORTIC I MATTER

31. In the *Aortic I* matter, I provided declarations regarding my understanding of the meaning of certain claims terms in the ’735 Patent to a POSA. I understand that the Court construed certain terms in the *Aortic I* matter as follows:

Term	Court’s Construction
frame	plain and ordinary meaning
outer frame	a self-expanding frame
inner frame	a balloon-expandable frame
fibers	plain and ordinary meaning
outer seal	plain and ordinary meaning
outwardly extending fibers	fibers that extend in a generally outward direction from the frame
[preamble of the '735 claim 1]	the preamble of claim 1 is not limiting

Aortic I, Claim Construction Order.

32. I also understand that in the *Aortic I* matter, that the court further construed "outer frame" in the '846, '538, and '236 patents to require a self-expanding frame. *Aortic I*, Order on Aortic's Motion for Clarification. I further understand that the Court stated: "When the same term is disputed across related patents, Courts 'presume, unless otherwise compelled, that the same claim term in the same patent or related patents carries the same construed meaning.'" *Aortic I*, Order on Aortic's Motion for Clarification at 9. It is also my *understanding* that the patents-in-suit in *Aortic II* are related to the '735 patent in *Aortic I*.

IX. THE PATENTS-IN-SUIT

A. Technical Background

33. At a high-level, the specifications of the patents-in-suit disclose devices for treating two different diseases of the heart and the aorta: (1) endograft devices for repair of ascending aortic aneurysms; and (2) transcathether aortic valve replacement devices for treating aortic valve disease.

34. First, the specifications of the patents-in-suit disclose an endograft devices for endovascular repair of ascending aortic aneurysms. '918 Patent, col. 2:54-56. An ascending aortic aneurysm is an enlargement, dilatation or bulging of the ascending aorta. This enlargement can occur as a result of a defect of the connective tissue of the wall of the aorta or can be related to hypertension. As the aorta enlarges so the wall itself becomes weaker and if left untreated, an ascending aortic aneurysm can rupture and result in fatal internal bleeding. The Aortic endograft device inventions were designed by Dr. Shahriari to treat this condition. Examples of these devices are shown in Figures 2 and 15 of the Aortic specifications. In the patents-in-suit, the device designed to treat aneurysms is referred to as Device 10. As shown in these examples, the endograft devices pass through and seal off the enlarged aorta (shown in orange below) to prevent its rupture.

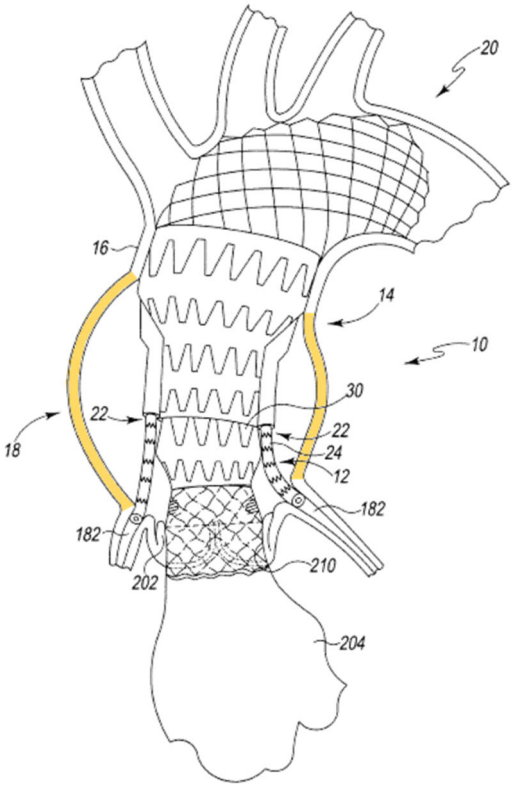

Fig. 2

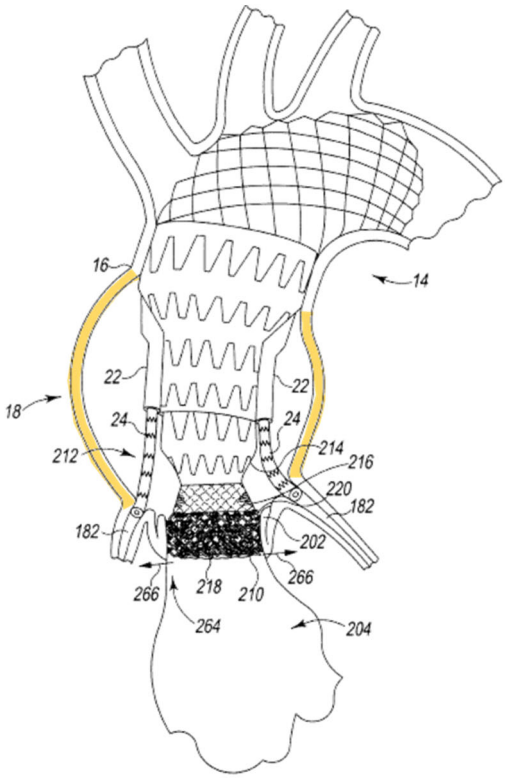

Fig. 15

35. The endograft device inventions and embodiments were originally disclosed in Aortic's U.S. Provisional App. No. 61/567,458 ("'458 Application"). Below is an annotated version of Fig. 2 from the '458 Application.

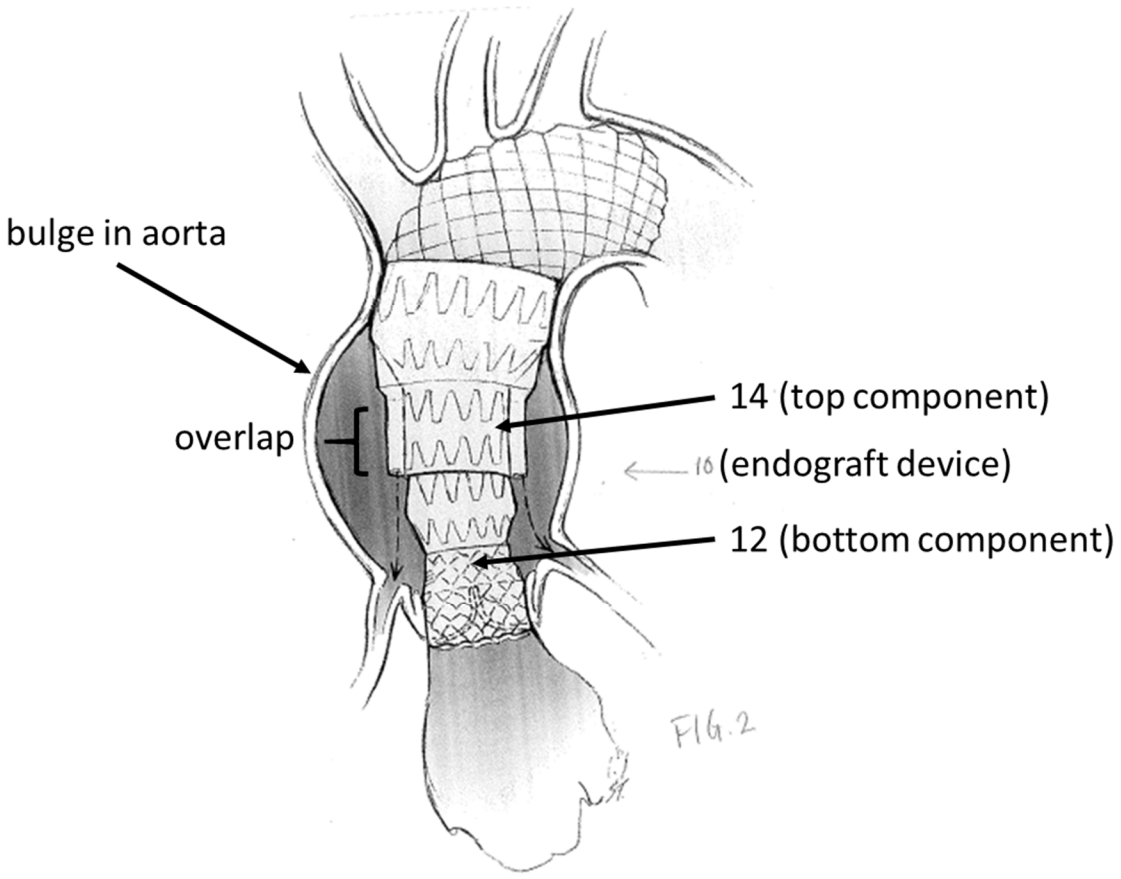

36. The illustration in Fig. 2 above shows that the bottom component 12 is deployed within the top component 14 to create an overlap between the top component 14 and the bottom component 12 to exclude the aortic aneurysm. To do so, the top (distal) component 14 is deployed first, followed by deployment of the bottom (proximal) component 12 to create overlap between the two components. The overlap area is the area that secures the components together and prevents bleeding between the components. Although, aortic valve disease can occur in patients with an aneurysm, aortic valve disease and aneurysms are different diseases of the heart and aorta.

37. Second, the specifications of the patents-in-suit disclose aortic transcathether valve replacement (TAVR) devices for endovascular repair with an improved paravalvular seal for treating aortic valve disease. *See* '918 Patent, Abstract, Title. Aortic valve disease refers to degenerative disease of the aortic valve leaflets which become calcified and prevent the aortic

valve from opening and closing normally. The TAVR device inventions were designed by Dr. Shahriari to treat aortic valve disease. An example of these devices is shown, for example, in Fig. 5 of Aortic's U.S. Provisional Application 61/723,446.

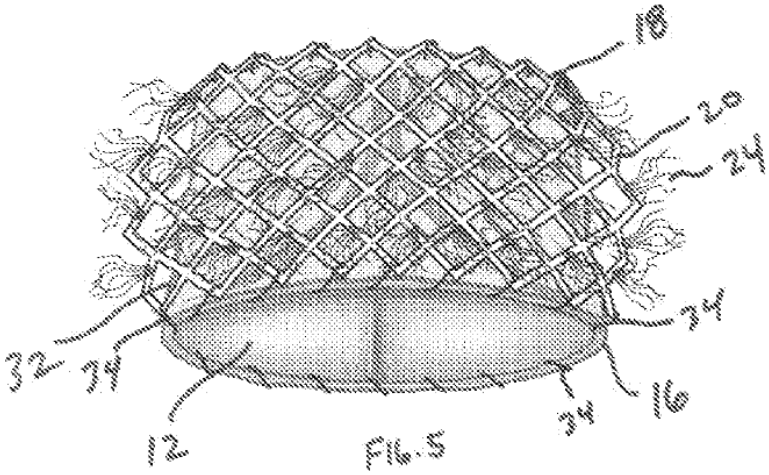

38. Additional examples of Aortic's TAVR inventions are reflected in Figs. 17-22 of the Aortic specifications. As shown in Figs. 19 and 22, the TAVR devices are installed over and function in place of the native aortic valve leaflets.

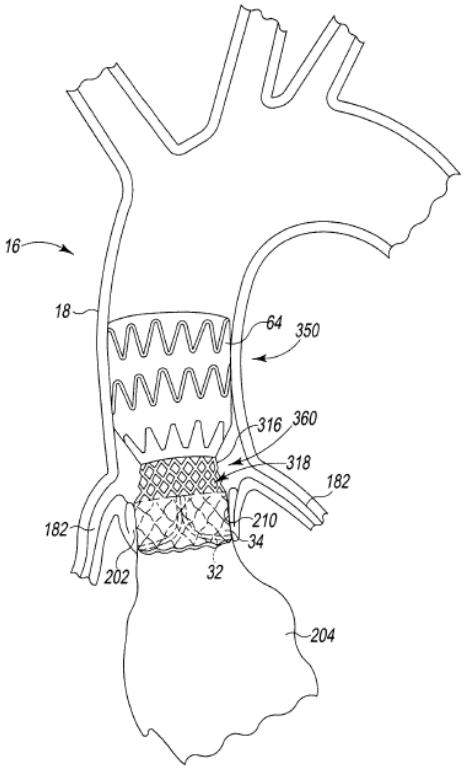

Fig. 19

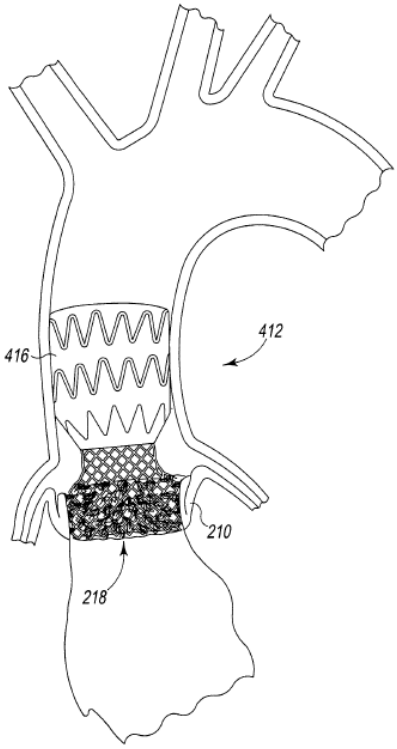

Fig. 22

39. As reflected in the Fig. 22 above, Aortic's TAVR inventions include a low profile fiber seal for addressing paravalvalvular leaks. For example, the "Abstract" of the '918 Patent discusses that the "transcatheter valve assembly replacement device includes a paravalvular seal that includes outwardly extending fibers that create a seal with the annulus when the valve assembly is deployed." '918 Patent, Abstract.

40. Aortic's TAVR device inventions with a low profile fiber seal were first disclosed by Aortic in U.S. Provisional App. No. 61/723,446 ("'446 Application").

B. ’834 Patent

1. Asserted Claims

41. I understand that Aortic Innovations asserts that Edwards infringes claims 2 (depends from claim 1), 9 (depends from claim 1), 17 and 18 of the ‘834 Patent. The identified terms in the asserted claims are reproduced below with the language discussed herein in bold:

Claim	Claim Text
1	An endovascular prosthetic heart valve for use in a patient, comprising: a **frame** formed of a plurality of struts that cooperate to form a plurality of cells, wherein the **frame** is radially expandable from a radially compressed orientation to a radially expanded orientation; a leaflet assembly within the **frame**; a polymer covering, wherein the polymer covering is attached to the leaflet assembly and positioned radially inwardly of the **frame** and radially outwardly of the leaflet assembly; a first **plurality of fibers** that extend away from the **frame**, wherein the prosthetic heart valve is endovascularly deployed through a femoral artery of the patient, wherein the first **plurality of fibers** is configured for being pressed against native leaflets of the patient when the prosthetic heart valve is endovascularly deployed to the radially expanded orientation within a native heart valve annulus of the patient; a **second plurality of fibers** that is positioned radially inwardly from the first **plurality of fibers**, wherein the **second plurality of fibers** is in direct contact with the **frame**.
2	The prosthetic heart valve of claim 1, wherein the **second plurality of fibers** defines a **spacing** extending through a thickness thereof that is created by a distance between adjacent **fibers**, wherein the **spacing** extends to the **frame**.
9	The prosthetic heart valve of claim 1, wherein the prosthetic heart valve is free of a non-porous graft covering between the first **plurality of fibers** and the **frame** and the **second plurality of fibers** and the **frame**.

Claim	Claim Text
17	An endovascular prosthetic heart valve for use in a patient, comprising: a **frame** formed of a plurality of struts that cooperate to form a plurality of cells, wherein the **frame** is radially expandable from a radially compressed orientation to a radially expanded orientation; a leaflet assembly within the **frame**; a polymer covering carrying the leaflet assembly and positioned radially inwardly of the **frame** and radially outwardly of the leaflet assembly; a first **plurality of fibers** that extend away from the **frame**, wherein the first **plurality of fibers** is configured for being pressed against native leaflets of the patient when the prosthetic heart valve is endovascularly deployed to the radially expanded orientation within a native heart valve annulus of the patient; and a **second plurality of fibers** that is positioned radially inwardly from the first **plurality of fibers**, wherein the **second plurality of fibers** is in direct contact with the **frame**, wherein the prosthetic heart valve is endovascularly deployed through a femoral artery of the patient, wherein the prosthetic heart valve defines a **spacing** extending through a thickness of the first **plurality of fibers** that is created by a distance between adjacent **fibers** thereof, through a thickness of the **second plurality of fibers** created by a distance between adjacent **fibers** thereof, and through the plurality of cells of the **frame**, wherein, compression of the first **plurality of fibers** and the **second plurality of fibers** in response to expansion of the prosthetic heart valve compresses the first **plurality of fibers** relative to the **spacing** to create a seal thereabout.

Claim	Claim Text
18	An endovascular prosthetic heart valve for use in a patient, comprising: a **frame** formed of a plurality of struts that cooperate to form a plurality of cells, wherein the plurality of cells defines at least two rows of cells at an inflow end of the **frame**, wherein the **frame** is radially expandable from a radially compressed orientation to a radially expanded orientation; a leaflet assembly within the **frame**; a polymer covering carrying the leaflet assembly and positioned radially inwardly of the **frame** and radially outwardly of the leaflet assembly; and a **plurality of fibers** that extend away from the **frame**, wherein the prosthetic heart valve is endovascularly deployed through a femoral artery of the patient, wherein the **plurality of fibers** is configured for being pressed against native leaflets of the patient when the prosthetic heart valve is endovascularly deployed to the radially expanded orientation within a native heart valve annulus of the patient, wherein the prosthetic heart valve defines a **spacing** extending through a thickness of the **plurality of fibers** that is created by a distance between adjacent **fibers** thereof through the plurality of cells of the **frame**, wherein, compression of the **plurality of fibers** in response to expansion of the prosthetic heart valve compresses the **plurality of fibers** relative to the **spacings** to create a seal thereabout, wherein the **plurality of fibers** extends over each of the at least two rows of cells.

2. Prosecution History

42. The '834 Patent application (U.S. Patent App. No. 17/327,673) was examined by Tiffany P. Shipmon and Jennifer Dieterle and subject to several rejections before being ultimately allowed on May 2, 2022. I understand that the claims were initially rejected based on certain indefiniteness rejections, including ones relating to the terms "array of fibers" and "opening". Aortic amended the then pending claims to recite "plurality of fibers" and "spacing". U.S. Patent App. No. 17/327,673, Request for Continued Examination (dated November 18, 2021) at 2-9. Aortic explained, regarding the latter amendment: "What the Applicant is claiming is the spacing between segments of some fibers. The spacing allows for inward deflection and compression of the fibers when the frame is expanded to fill any voids within the annulus and the seal formed by

the fibers. This is well-illustrated in the images showing the deployed device." U.S. Patent App. No. 17/327,673, Request for Continued Examination (dated November 18, 2021) at 7-9. The examiner did not disagree with Aortic and subsequently allowed the claims stating: "The prior art does not disclose or render obvious the prosthetic heart valve defining a spacing extending through a thickness of the plurality of fibers that is created by a distance between adjacent fibers thereof through the plurality of cells of the frame." U.S. Patent App. No. 17/327,673, Notice of Allowance (dated Jan. 25, 2022) at 2 (emphasis added)

C. '310 Patent

1. Asserted Claims

43. I understand that Aortic Innovations asserts that Edwards infringes claims 11 and 13 of the '310 Patent. The identified terms in the asserted claims are reproduced below with the language discussed herein in bold:

Claim	Claim Text
11	A transcatheter aortic heart valve assembly comprising: a graft covering engaging prosthetic heart valve leaflets, wherein the graft covering extends around the prosthetic heart valve leaflets for providing sealing to the prosthetic heart valve leaflets; a **frame** formed from a metallic material and defining an open cell configuration, and being secured to the graft covering; and a **sealing material** positioned externally to the **frame** for providing sealing between the **frame** and a patient's anatomical wall to prevent paravalvular leaks, wherein the **sealing material** is attached to the **frame**, wherein the **sealing material** defines a height that extends over at least a first two rows of cells in the **frame**, wherein the **sealing material** includes a plurality of **outwardly extending**, arcuate **fibers** that extend outwardly of the **frame**; wherein the heart valve assembly is configured to be deployed endovascularly through a femoral artery of the patient, wherein the heart valve assembly has a radially compressed orientation and a radially expanded orientation, wherein expansion of the heart valve assembly from the radially compressed orientation to the radially expanded orientation is configured to press the **outwardly extending fibers** into engagement with native leaflets of the aorta of the patient, wherein the **plurality of fibers** is in contact with the **frame** along the height of the **sealing material** when the heart valve assembly is in the radially compressed orientation and the radially expanded orientation.
13	The valve assembly of claim 11, wherein the graft covering housing a prosthetic heart valve forms an **inner frame** for supporting the prosthetic heart valve.

2. Prosecution History

44. The '310 Patent application (U.S. Patent App. No. 16/941,117) was examined by Tiffany P. Shipmon and Jennifer Dieterle and subject to several rejections before being ultimately allowed on June 6, 2022. I understand that the claims were rejected several times based on different reasons, including that the claims, as drafted at the time, were obvious over combination of Spenser et al. (US 7,510,575) and Dehdashtian et al. (WO 2006/005015) with Bahler et al. (US 2005/0273155) or Levi et al. (US 9,393,110) and Levi (USPN 9,393,110) combined with Dehdashtian (WO 2006/005015) and Rankin et al. (US 2012/0143324) and/or Rowe et al. (US 2006/0287719). Aortic amended claims several times and argued, among other reasons, that the

references identified by the examiner did not teach a TAVR suitable for endovascular delivery. U.S. Patent App. No. 16/941,117, Amendment and Response (dated Nov. 4, 2021) at 7-17. Aortic also explained, regarding the combinations with Levi that such combinations do not teach that "the plurality of fibers is in contact with the outer frame along the height of the sealing material when the heart valve assembly is in the radially compressed orientation and the radially expanded orientation." U.S. Patent App. No. 16/941,117, Amendment and Response (dated May 11, 2022) at 7-12. The examiner did not disagree with Aortic and subsequently allowed the claims on June 6, 2022, explaining that "the prior art does not disclose or render obvious wherein the plurality of fibers is in contact with the outer frame along the height of the sealing material when the heart valve assembly is in the radially compressed orientation and the radially expanded orientation in combination with the recited claim features." U.S. Patent App. No. 16/941,117, Notice of Allowance (dated June 6, 2022).

D. '033 Patent

1. Asserted Claims

45. I understand that Aortic Innovations asserts that Edwards infringes claims 1 and 5 of the '033 Patent. The identified terms in the asserted claims are reproduced below with the language discussed herein in bold:

Claim	Claim Text
1	An endovascular prosthetic heart valve assembly having improved sealing for addressing paravalvular leakage for use in a patient, comprising: a **frame** formed of a plurality of cells, wherein the plurality of cells defines at least two rows of cells at an inflow end of the **frame**, wherein the **frame** is radially expandable from a radially compressed orientation to a radially expanded orientation; a leaflet assembly within the **frame**; a polymer covering about the leaflet assembly that is positioned radially inwardly of the **frame** and engaged with the leaflet assembly for providing sealing against paravalvular leakage; and a **sealing assembly** that includes a plurality of arcuate **fibers** that extend away from the **frame** for providing sealing against paravalvular leakage, wherein the **sealing assembly** extends over each of the at least two rows of cells, wherein the **sealing assembly** lays against the **frame** when the prosthetic heart valve assembly is in the radially compressed orientation and the radially expanded orientation, wherein the prosthetic heart valve assembly is sized and shaped to be endovascularly deployed through a femoral artery of the patient, wherein the prosthetic heart valve assembly defines **spacings** extending through a thickness of the **sealing assembly** that allow fluid to pass therethrough when the prosthetic heart valve assembly is in an undeployed state, wherein, in operation, expansion of the prosthetic heart valve assembly to the radially expanded orientation in a deployed state: presses the **sealing assembly** against the native leaflets of the aorta to impart compression of the **sealing assembly** that compresses the **plurality of fibers** relative to the **spacings** thereby reducing the **spacings**; and expands the polymer covering radially outwardly, wherein the compression of the **plurality of fibers** relative to the **spacings** and the expansion of the polymer covering cooperatively create a paravalvular seal about the **frame** and the native leaflets by reducing the spaces in the **sealing assembly**.
5	The prosthetic heart valve assembly of claim 1, wherein the **frame** is integrally formed.

2. Prosecution History

46. The '033 Patent application (U.S. Patent App. No. 17/719,160) was examined by Tiffany P. Shipmon, Jennifer Dieterle, and Paul B Prebilic and subject to two rejections before being ultimately allowed by the examiners on October 14, 2022. I understand that the claims were initially rejected by the examiners based on the combination of two patent application publications:

Nguyen et al. (WO 2006/124649) in view of Greenhalgh (US 2002/0052649). Aortic canceled the claims and added new claims. In a subsequent, office action, the examiner rejected the pending claims, among other reasons, because the specification did not use the term "arcuate fibers." In response Aortic explained how the drawings support "arcuate fibers." U.S. Patent App. No. 17/719,160, Response (dated August 23, 2022) at 5-6. After several notice of allowance, the claims were ultimately allowed on October 14, 2022.

E. '634 Patent

1. Asserted Claims

47. I understand that Aortic Innovations asserts that Edwards infringes claims 1-7 and 9 of the '634 Patent. The identified terms in the asserted claims are reproduced below with the language discussed herein in bold:

Claim	Claim Text
1	A transcatheter aortic heart valve assembly comprising: a graft covering engaged with prosthetic heart valve leaflets, wherein the graft covering extends about the prosthetic heart valve leaflets for providing sealing thereto; a **frame** formed from a metallic material and defining a plurality of continuously extending struts that extend through a circumference of the **frame**, the struts adjoining each other at an inflow end of the **frame** to form apices, and the struts cooperatively forming an open cell configuration, wherein the **frame** is secured to the graft covering, wherein the graft covering is made of a polymer; and a **plurality of fibers** in contact with a plurality of rows of open cells at the inflow end of the **frame**, wherein the **fibers** are arcuate, spaced-apart, and **outwardly extending**, wherein the **fibers** are spaced-apart to define **spacings** in a radially extending direction from the outermost aspect of the **fibers** to the outer surface of the **frame** such that fluid is permitted to pass therethrough when the valve assembly is in an uncompressed state, wherein an **end of the apices of the frame that are most proximal are uncovered by the fibers and the graft covering such that an end of the most proximal apices of the frame extends more proximally than a most proximal one of the plurality of fibers**, wherein the plurality of spaced-apart **fibers** is compressed when the heart valve assembly is pressed against native valve leaflets of the aorta to form a seal against the native valve leaflets and the **frame** by compression of the **fibers** into the radially extending **spacings**, wherein the graft covering is engaged with **fibers** of the **plurality of fibers**, wherein, in operation the heart valve assembly is configured to be deployed endovascularly through a femoral artery of the patient after obtaining access to the femoral artery.
2	The valve assembly of claim 1, wherein the **frame** extends distally further than the prosthetic heart valve leaflets.
3	The valve assembly of claim 1, wherein the **frame** is a singular, integral component.
4	The valve assembly of claim 1, wherein the **frame** and the graft covering are attached by stitching at a top and bottom portion of the graft covering.
5	The valve assembly of claim 1, wherein the valve assembly is balloon expandable.
6	The valve assembly of claim 1, wherein the graft covering forms an **inner frame** for housing the prosthetic heart valve leaflets.
7	The valve assembly of claim 1, wherein the valve assembly is configured for being received within a catheter that is delivered through the femoral artery of the patient.
9	The valve assembly of claim 1, wherein a row of cells distal to the graft covering is uncovered by the graft covering and the **fibers**.

2. Prosecution History

48. The '634 Patent application (U.S. Patent App. No. 17/469,391) was examined by Tiffany P. Shipmon, Jennifer Dieterle, and Jacqueline Woznicki and subject to two rejections before being ultimately allowed on September 23, 2022. I understand that the claims were rejected several times based on different reasons, including that the claims, as drafted at the time, were obvious over combination of Spenser et al. (US 7,510,575) and Dehdashtian et al. (WO 2006/005015) and the combination of Levi (USPN 9,393,110) combined with Dehdashtian (WO 2006/005015) and Rankin et al. (US 2012/0143324). Aortic amended claims several times and argued, among other reasons, that the references identified by the examiner did not teach a TAVR suitable for endovascular delivery through the femoral artery, teach the claimed spacings, or teach the uncovered apices limitations. U.S. Patent App. No. 17/469,391, Amendment and Response (dated May 18, 2022) at 5-28. The examiner did not disagree with Aortic and subsequently allowed the claims on June 6, 2022, explaining that "the prior art does not disclose or render obvious 'wherein fibers are spaced apart to define spacings in a radially extending direction from the outermost aspect of the fibers to the outer surface of the frame such that fluid is permitted to pass therethrough when the valve is in an uncompressed state, wherein an end of the apices of the outer frame that are most proximal are uncovered by the fibers and the graft covering such that an end of the most proximal apices of the outer frame extends more proximally than a most proximal one of the plurality of fibers.'" U.S. Patent App. No. 17/469,391, Notice of Allowance (dated June 16, 2022) at 2. Subsequent notices of allowance were issued, with the ultimate one issued on Sept. 23, 2022.

F. ’918 Patent

1. Asserted Claims

49. I understand that Aortic Innovations asserts that Edwards infringes claims 1, 4-10, 16-17, 20-22, 26 of the ‘918 Patent. The identified terms in the asserted claims are reproduced below with the language discussed herein in bold:

Claim	Claim Text
1	An endovascularly deployed heart valve assembly comprising: a graft covering for engaging prosthetic heart valve leaflets, wherein the graft covering engages the prosthetic heart valve leaflets for providing sealing thereto; a **frame** formed from a metallic material and defining an open cell configuration and having an inflow end portion and an outflow end portion, and being secured to the graft covering; and a **sealing material** positioned externally to the **frame** for providing sealing between the **frame** and a patient's anatomical wall of the aorta to prevent paravalvular leaks, wherein the **sealing material** begins at the inflow end portion of the **frame** and extends over at least two rows of cells formed in the open cell configuration of the **frame**, wherein the **sealing material** includes a plurality of **outwardly extending fibers** that extend outwardly of the **frame**, wherein the **fibers** are arcuate, wherein the **fibers** are flexible such that compression of the **fibers** imparts movement thereto, wherein the **fibers** are in contact with the **frame** along a height of the **sealing material**, wherein the **fibers** are spaced-apart to define **spacings** in a circumferentially extending direction and an axially extending direction along an outer surface of the **frame**, wherein the **spacings** extend radially through a thickness of the **sealing material** beginning at an outermost portion of the **fibers** and extending to the **frame**, wherein the heart valve assembly has a radially compressed orientation and a radially expanded orientation, wherein the **sealing material** is configured for being pressed against native aortic leaflets of the patient and compressing in response thereto, wherein being pressed against the native aortic leaflets forms a seal against the native valve leaflets and the **frame** by compression of the **fibers** into the **spacings** to reduce the **spacings** extending to the **frame**, wherein the heart valve assembly is sized and shaped for being delivered endovascularly through a femoral artery of a patient.

Claim	Claim Text
4	The endovascularly deployed heart valve assembly of claim 1, wherein the graft covering, prosthetic leaflets, and the **sealing material** are radially overlapping.
5	The endovascularly deployed heart valve assembly of claim 1, further comprising a **second plurality of fibers**, the **second plurality of fibers** being spaced-radially inwardly of the **plurality of fibers**, wherein, expansion of the graft covering closes a gap between the graft covering and the **second plurality of fibers** to thereby create a seal therebetween.
6	The endovascularly deployed heart valve assembly of claim 1, wherein the **fibers** extend outwardly to different positions relative to a centerline run through a longitudinal of the heart valve assembly.
7	The endovascularly deployed heart valve assembly of claim 1, wherein the graft covering extends to the inflow end portion of the **frame**, wherein, stitching extending between the graft covering and through the **frame** secures the graft covering to the inflow end portion of the **frame**.
8	The endovascularly deployed heart valve assembly of claim 1, wherein an **end of the most proximal apices of the frame are uncovered by sealing material and the graft covering,** **wherein the end of the most proximal apices of the frame extends more proximally than a proximal end of the sealing material**.
9	The endovascularly deployed heart valve assembly of claim 1, wherein the end of the **frame** in which **sealing material** begins at the inflow end portion of the **frame** is configured for being radially aligned with the aortic annulus when the valve assembly is deployed.

Claim	Claim Text
10	An endovascular prosthetic heart valve assembly for use in a patient, comprising: a **frame** formed of a plurality of struts that cooperate to form a plurality of cells, wherein the **frame** is radially expandable from a radially compressed orientation to a radially expanded orientation; a leaflet assembly within the **frame**; a polymer covering carrying the leaflet assembly and positioned radially inwardly of the **frame** and engaging the leaflet assembly; a first **plurality of fibers** that extend away from the **frame**, wherein the first **plurality of fibers** is configured for being pressed against native leaflets of the patient when the prosthetic heart valve is endovascularly deployed to the radially expanded orientation within a native aortic heart valve annulus of the patient; and a **second plurality of fibers** that is positioned inwardly from the first **plurality of fibers**, wherein the **second plurality of fibers** is in direct contact with the **frame**, wherein the first **plurality of fibers** radially overlap the **second plurality of fibers** to cooperatively cover the **frame**, wherein the heart valve assembly is sized and shaped for being delivered endovascularly through a femoral artery of a patient into the aorta, wherein the prosthetic heart valve defines a **spacing** extending through a thickness of the first **plurality of fibers** that is created by a distance between **fibers** thereof and through a thickness of the **second plurality of fibers** created by a distance between **fibers** thereof, wherein, compression of the first **plurality of fibers** and the **second plurality of fibers** in response to expansion of the prosthetic heart valve compresses the first **plurality of fibers** and the **second plurality of fibers** relative to the **spacing** to create a seal thereabout.
16	The endovascularly deployed heart valve assembly of claim 1, wherein the **frame** is integrally formed.
17	The valve assembly of claim 10, wherein the **frame** is integrally formed.
20	The endovascularly deployed heart valve assembly of claim 1, wherein the graft covering forms an **inner frame** for supporting the prosthetic heart valve leaflets.

Claim	Claim Text
21	An endovascular prosthetic heart valve assembly for use in a patient, comprising: a **frame** formed of a plurality of struts that cooperate to form a plurality of cells, wherein the **frame** is radially expandable from a radially compressed orientation to a radially expanded orientation; a leaflet assembly within the **frame**; a polymer covering carrying the leaflet assembly and positioned radially inwardly of the **frame** and engaging the leaflet assembly; a first layer for forming a seal upon compression, the first layer configured for being pressed against native leaflets of the patient when the prosthetic heart valve is endovascularly deployed to the radially expanded orientation within a native aortic heart valve annulus of the patient, wherein the first layer comprises a **plurality of fibers** that extend away from the **frame**, wherein the **plurality of fibers** is compressed against the native aortic heart valve annulus of the patient; and a **second layer** for forming a seal upon compression, wherein the **second layer** is positioned radially inwardly from the first layer, wherein the **second layer** is in direct contact with the **frame**, wherein the **second layer** defines a **spacing** extending through a thickness of the **second layer** for passage of fluid therethrough prior to forming a seal upon compression, wherein the heart valve assembly is sized and shaped for being delivered endovascularly through a femoral artery of a patient into the aorta, wherein, compression of the first layer and the **second layer** in response to expansion of the prosthetic heart valve compresses the **fibers** of the first layer relative to the **spacing** to create a paravalvular seal.
22	The valve assembly of claim 21, wherein the first layer and the **second layer** are **distinct layers**.
26	The valve assembly of claim 21, wherein the **frame** is integrally formed.

2. Prosecution History

50. The '918 Patent application (U.S. Patent App. No. 17/213,251) was examined by Tiffany P. Shipmon, Jennifer Dieterle, and Paul B. Prebilic and subject to multiple rejections before being ultimately allowed by the examiners on October 5, 2022. I understand that the claims were rejected on different bases including, among others: (1) obviousness based on the combination of two patent application publications: Nguyen et al. (WO 2006/124649) in view of Greenhalgh (US 2002/0052649); (2) Spenser et al. (US 7,510,575) and Dehdashtian et al. (WO 2006/005015) with Bahler et al. (US 2005/0273155) and Ketharanathan (US2004/0030407) and

Levi (USPN 9,393,110); (3) Spenser et al. (US 7,510,575) and Dehdashtian et al. (WO 2006/005015) with Leewood et al. (WO 2005/112821). Aortic amended claims multiple times during prosecution. Aortic also explained, regarding the identified prior art that such combinations do not teach, among other things, outer sealing without significantly impacting crimp profile, the claimed spacings between fibers, and a TAVR suitable for endovascular delivery through the femoral artery. U.S. Patent App. No. 17/213,251, Amendment and Response (dated May 17, 2022) at 5-28; Amendment and Response (dated June 22, 2022) at 14-19. The examiner subsequently allowed the claims on Sept. 14, 2022 and October 5, 2022. U.S. Patent App. No. 17/213,251, Notices of Allowance (dated Sept. 14, 2022 and October 5, 2022).

G. Claim Terms

1. "Frame"

Term	Claims	Aortic construction	Edwards construction
frame	'834 Patent – Claims 2, 9, 17, 18; '310 Patent – Claims 11, 13; '033 Patent – Claims 1, 5; '634 Patent – Claims 1-7, 9; '918 Patent – Claims 1, 4-10, 16-17, 20-22, 26	Plain and ordinary meaning	a self-expanding frame

51. The term "frame" appears in multiple claims throughout the patents-in-suit as reflected in the table above. In my opinion, this term as used in the patents-in-suit, has its plain and ordinary meaning in the art and requires no further construction. I note that in the *Aortic I* matter, Edwards' previously sought to interpret the term "frame" to mean "A support structure having the strength to retain its expanded configuration and resist collapse." I understand that in the *Aortic I* matter, the Court rejected Edwards' construction of "frame" and construed term to have

its plain and ordinary meaning. I note that here, in the *Aortic II* matter, Edwards now proposes that the term "frame" means a self-expanding frame. I disagree that the term is so limited. Rather, it is my opinion that the term should be given its plain and ordinary meaning here, just as in the *Aortic I* case.

52. Edwards' construction of "frame" incorrectly attempts to read in specific details from the specification that are not expressly included in the claims—*i.e.*, that all frames in the claims be self-expanding. But, this feature is not required by the claims which do not mention or even suggest that all frames in the Aortic patents-in-suit must be self-expanding. Moreover, based on my review of the specification and the prosecution history I did not see any statements by Aortic disavowing or disclaiming "frames" that are non-self-expanding. Rather the specification of the patents-in-suit teaches frames that are both self-expanding and balloon expandable. For example, the specification discloses "[i]n some embodiments, operating the balloon-expandable frame may include advancing an outer surface of the balloon-expandable frame into engagement with the aortic annulus." '834 patent, col. 5:1-2. I also note that the specification indicates that the disclosed TAVRs may—but are not required—to have dual frames and that the frames may be either balloon-expandable or self expanding. '834 patent, col. 4:11-14 ("In some embodiments, the frame component may be a dual-frame component. … The balloon-expandable frame may be an inner frame.").

53. Indeed, a POSA at the time of invention in 2012 would have understood that TAVR frames could be either balloon-expandable or self expanding. In the *Aortic I* matter, I note that Edwards expert, Dr. Galla asserted that "[a]round December 6, 2011, there were two TAVR devices on the market: Edwards' Sapien-XT valve and the Medtronic CoreValve™ device." Galla Decl., ¶ 15. This is also consistent with Edwards' reference showing valves with balloon-expandable and self-expanding frames.

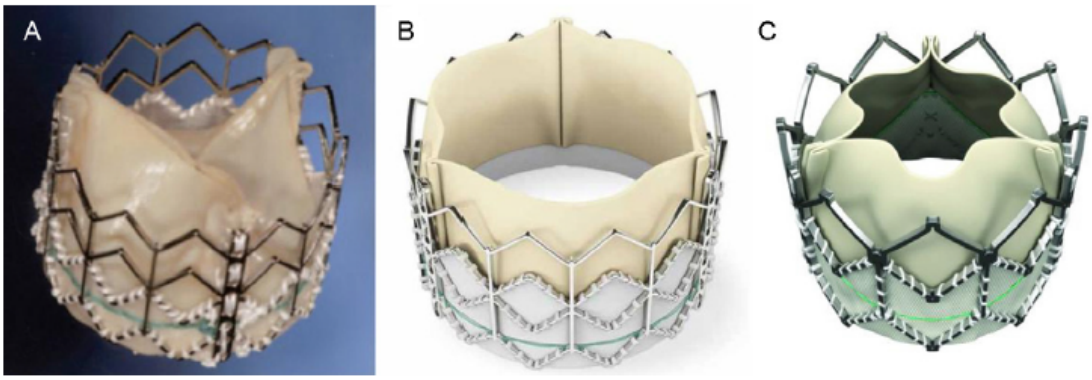

Figure 3. Balloon-expandable valves. The Cribier-Edwards (A), SAPIEN (B) and SAPIEN-XT (C) valves. Reprinted with permission.

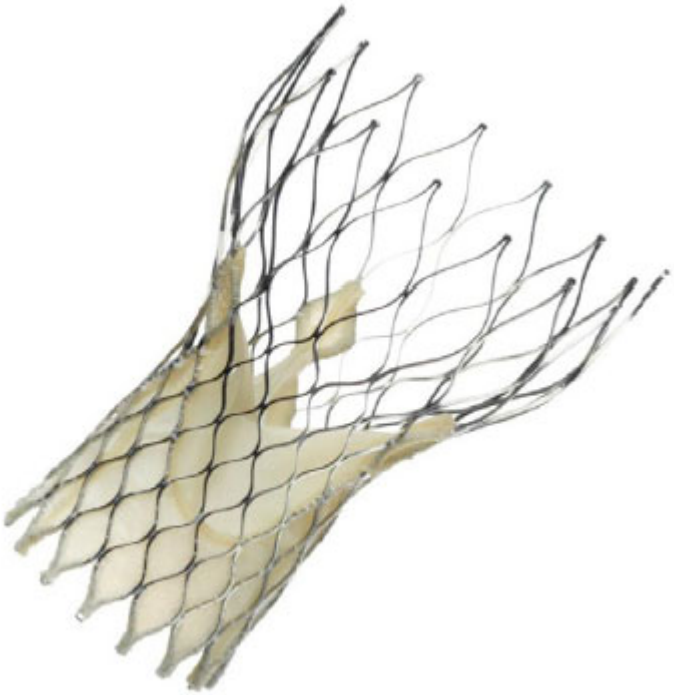

Figure 4. Medtronic CoreValve.

EDWARDS_AI011910.

54. Moreover, I note that during prosecution of U.S. Patent App. No. 17/975,986 sharing a related disclosure, the Examiner and Aortic made clear that the term "frame" is not limited to a self-expanding frame, but can also encompass balloon expandable frames. For

example, during prosecution, Aortic identified discussion of balloon-expandable frames in the specification as supporting the "frame" element.

a frame formed from a metallic material and defining a gridded configuration, and being secured to the covering by a plurality of stitches; and	*[00100] As shown in Fig. 17, the stent 38 of the balloon-expandable frame 34 has a diameter 46. As described in greater detail below, the balloon expandable frame 34 is expandable during implantation from an unexpanded diameter (not shown) to the expanded diameter 46.* *[00113] The frame may be covered with hydrogel or other sealing material .* *[0081] The dual-frame 214 of the proximal component 212 includes a self-expanding outer frame 216 and a balloon-expandable inner frame 218 that is secured to the self-expanding outer frame 216 and houses the valve 32. Referring now to FIG. 9, the self-expanding outer frame 216 has a generally hourglass shape and is formed from a metallic material, such as, nitinol, stainless steel, or other implant grade metallic material.* Sutures 260 illustrated in FIG. 11 and FIG. 12.

U.S. Patent App. No. 17/975,986, Amendment and Response (dated June 21, 2023) at 28-29.

55. Additionally, during prosecution of U.S. Patent App. No. 17/748,073, when Aortic claimed in pending dependent claims 20 and 29 that the "frame" was self-expanding, the Examiner rejected the claim stating that the disclosure in the specification supported "the frame … being balloon expandable" and that requiring the "frame" to be self-expanding constituted "new matter with respect to the original disclosure."

> 20. (Previously Presented) The heart valve assembly of claim 2, wherein the frame is self-expanding.

U.S. Patent App. No. 17/748,073, Claims (dated May 6, 2023) at 6.

> the application was filed, had possession of the claimed invention. These claims introduce new matter into the application because "the frame" that has open cells and a sealing material made of arcuate fibers is only described as being balloon expandable; see Figure 17 and paragraph 101 of the present specification. For this reason, requiring that "the frame" be "self-expanding" constitutes new matter with respect to the original disclosure.

U.S. Patent App. No. 17/748,073, Office Action (dated June 21, 2023) at 7.

56. Further, the art identified by Edwards in its IPR's on Aortic's patents was not limited to "frames" that were "self-expanding frames." Rather, Edwards identified, for example, figures from Spenser and Levi, among others, which reference and show balloon-expandable frames.

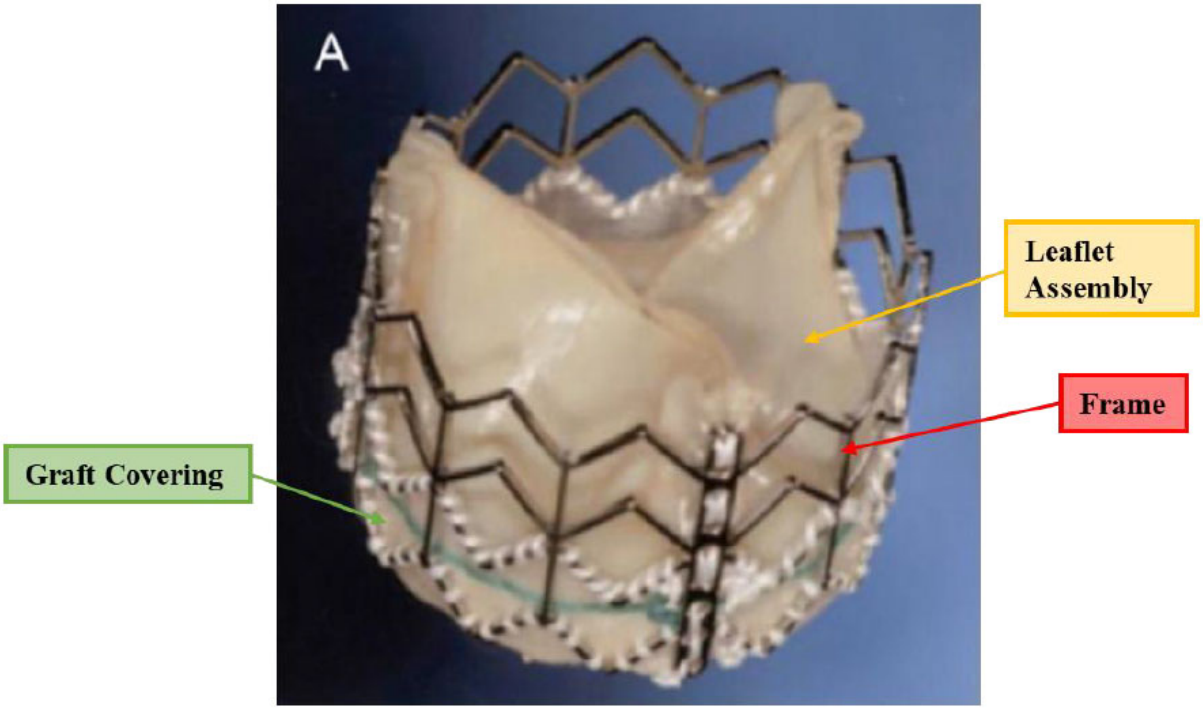

IPR2023-01151, Paper 1 [Petition] at 10 (discussing Cribier valve).

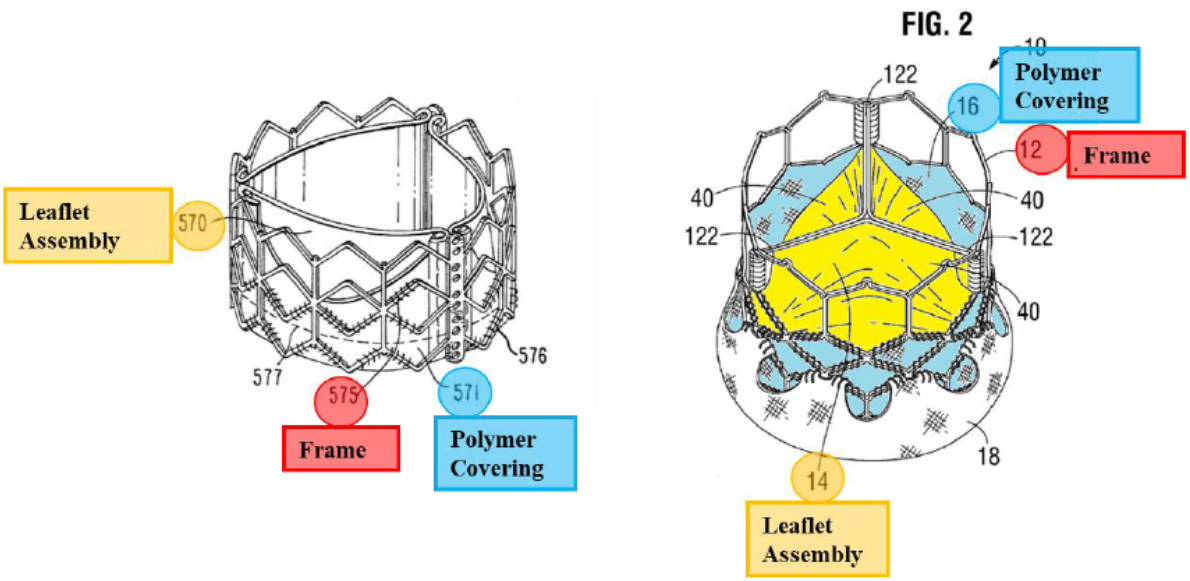

IPR2023-01151, Paper 1 [Petition] at 22.

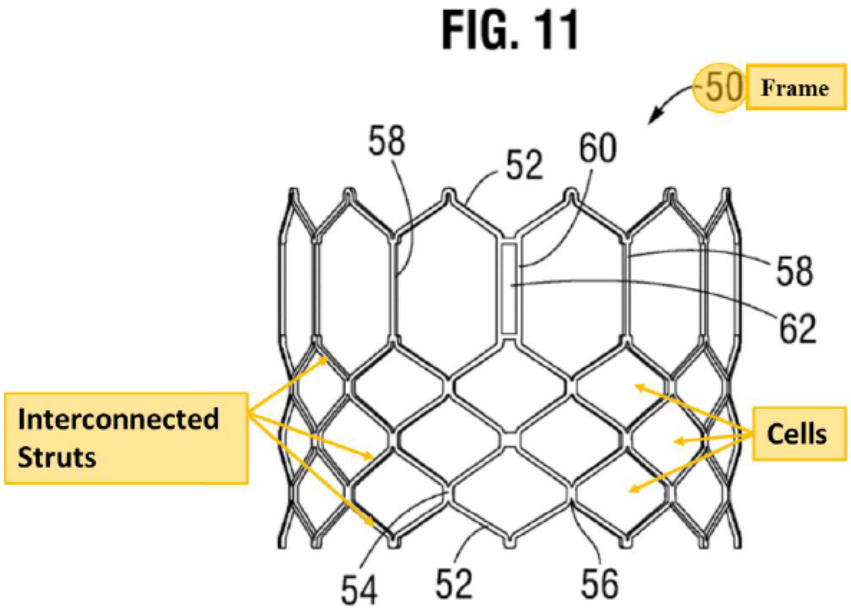

IPR2023-01151, Paper 1 [Petition] at 26.

57. In light of at least the foregoing, I agree with Aortic that the term "frame" as used in the patents-in-suit does not require further construction beyond its plain and ordinary meaning and should not be limited to "a self-expanding frame".

2. "Fibers"

Term	Claims	Aortic construction	Edwards construction
"fibers"	'834 Patent – Claims 2, 9, 17, 18; '310 Patent – Claims 11, 13; '033 Patent – Claims 1, 5; '634 Patent – Claims 1-7, 9; '918 Patent – Claims 1, 4-10, 16-17, 20-22, 26	Plain and ordinary meaning	collagen threads or filaments

58. The term "fibers" appears in multiple claims throughout the patents-in-suit as reflected in the table above. In my opinion, this term as used in the patents-in-suit has its plain and ordinary meaning in the art and requires no further construction. In the *Aortic I* matter, Edwards' previously sought to interpret the term "fibers" to mean "Discrete bundles of collagen threads or filaments." I understand that in *Aortic I*, the Court rejected Edwards' construction of "fibers" and construed term to have its plain and ordinary meaning. I note that here, in the *Aortic II* matter, Edwards now proposes that the term "fibers" mean collagen threads or filaments. I disagree that the term is so limited. Rather, it is my opinion that the term should be given its plain and ordinary meaning here, as in the *Aortic I* case.

59. The term "fibers" is used according to its plain and ordinary meaning in the art in the patents-in-suit. '834 patent, Claims 12 and 17; U.S. Provisional App. No. 61/723,446, Figures 2-3, and 5-10; paragraphs [0024]; [0031]-[0032]; [0034] and claim 1. A POSA would understand fibers in the context of the patents-in-suit to generally refer to thread-like objects or structures. *See, e.g.,* American Heritage College Dictionary (4th ed. 2007) at 514 ("fiber" "a thread like object or structure."); American Heritage College Dictionary (5th ed. 2012) at 314 ("fiber' "a slender

threadlike structure"); Merriam Webster's Collegiate Dictionary (11th ed. 2004) at 464 ("fiber" "a thread or structure resembling a thread").

60. Edwards' construction requiring "collagen threads or filaments" is incorrect, because it is too narrow and limits "fibers" to "threads or filaments" made from "collagen." But nothing in the claims, specification, or prosecution history require that the claimed "fibers" be limited to only collagen fibers. When reviewing the specification and the prosecution history, I did not see any statements by Aortic disavowing or disclaiming non-collagen "fibers". In fact, the specification describes "collagen fibers" as part of an "illustrative embodiment" ['834 Patent, col. 18:34-35] and then goes on to describe that "[i]t should be appreciated that in other embodiments the outer frame 216 may be covered with … *other sealing materials*." '834 Patent, col. 18:39-41. A POSA would appreciate that "other sealing materials" encompasses non-collagen fibers and sealing materials.

61. I further note that numerous dependent claims in the patents-in-suit expressly claim fibers that are "collagen fibers." '834 patent, claim 7 ("wherein the first plurality of fibers and the second plurality of fibers are collagen fibers."). This indicates that the "fibers" claimed in claim 1 are broader than the "collagen fibers" of claim 7, because otherwise, the addition of claim 7 would be meaningless beyond what is already claimed in claim 1. The same is true of the '310 patent, claims 4 and 9, of the '634 patent, claim 8, and of the '918 patent, claim 2 which also include dependent claims specifying "fibers" that are "collagen fibers" indicating that the term "fibers" includes fibers that are non-collagen.

62. Further, during prosecution of a related patent ('735 patent), although the examiner appears to have initially interpreted the term "arcuate fibers" to reference to collagen fibers, Aortic convinced the examiner that the term was not so limited. Specifically, Aortic disagreed with the

examiner, added a separate claim specifically directed to "collagen fibers" and wrote the examiner that "fibers" in the claims was used according to its ordinary meaning.

> those rejections by cancellation of claims, or by remarks submitted herewith. Applicant notes the 35 USC 112 rejection over the use of the word "fibers," and the USPTO commentary on collagen fibers. Applicant submits that the claim term of fibers found in claim 11 and many other claims is the ordinary meaning of fibers. New claim 26 recites that the fibers are collagen fibers.

63. U.S. Patent App. No. 17/170,957 ('735 Patent Prosecution History, May 21, 2021 Amendment and Response) at 6. The examiner did not dispute Aortic's explanation and subsequently allowed the claims. U.S. Patent App. No. 17/170,957 ('735 Patent Prosecution History, June 11, 2021 Notice of Allowance). This further indicates that Edwards' construction is flawed.

64. I also note that during prosecution, the examiner relied on non-collagen polymer fibers in rejecting the claims during prosecution. For example, the examiner relied on Dehdashtian's teaching of "compressible material 256" described as made from polyethylene terephthalate in rejecting the claims.

> 25. Dehdashtian et al. discloses a heart valve in the same field of endeavor a plurality of radially extending fibers that extend outwardly of the outer frame (paragraph 145) configured to form a first sealing interface against native valve leaflets of a patient when the first plurality of fibers is compressed thereagainst, wherein the first plurality of fibers extends radially outwardly of the frame(paragraph 145), and a second plurality of fibers carried by the frame that is configured to form a second sealing

U.S. Patent App. No. 17/469,391, Final Rejection (dated Jan. 24, 2022) at 6-7.

[00145] To reduce or prevent paravalvular leakage, a layer of compressible material 256 is disposed along an outer surface of the stent structure 252. The material may extend partially around the stent structure or may extend entirely around the stent structure, such as in the form of a sleeve. In one preferred embodiment, the compressible material is formed of polyethylene terephthalate (PET) and has a thickness ranging from about 1 to 5 mm. In certain configurations, the compressible material 256 may resemble a cloth or fabric having small fibers extending from the surface of the material. In various embodiments, the fibers may be straight, curved or hook-shaped. The compressible material expands after deployment at a treatment site. As the compressible material expands, it fills the gaps between the stented valve and the surrounding tissue. Accordingly, the compressible material creates a mechanical seal

Dehdashtian (WO 2006/005015)

This further demonstrates that the claims should not be limited to collagen fibers.

65. I also note that Edwards' position is inconsistent with its positions taken in the IPRs. For example, the art identified by Edwards in its IPRs was not limited to a "fibers" that are collagen threads or filaments. In fact, Edwards identified non-collagen materials from Cheung, Walther and Spenser II in the IPRs as providing the "fibers" of the claims.

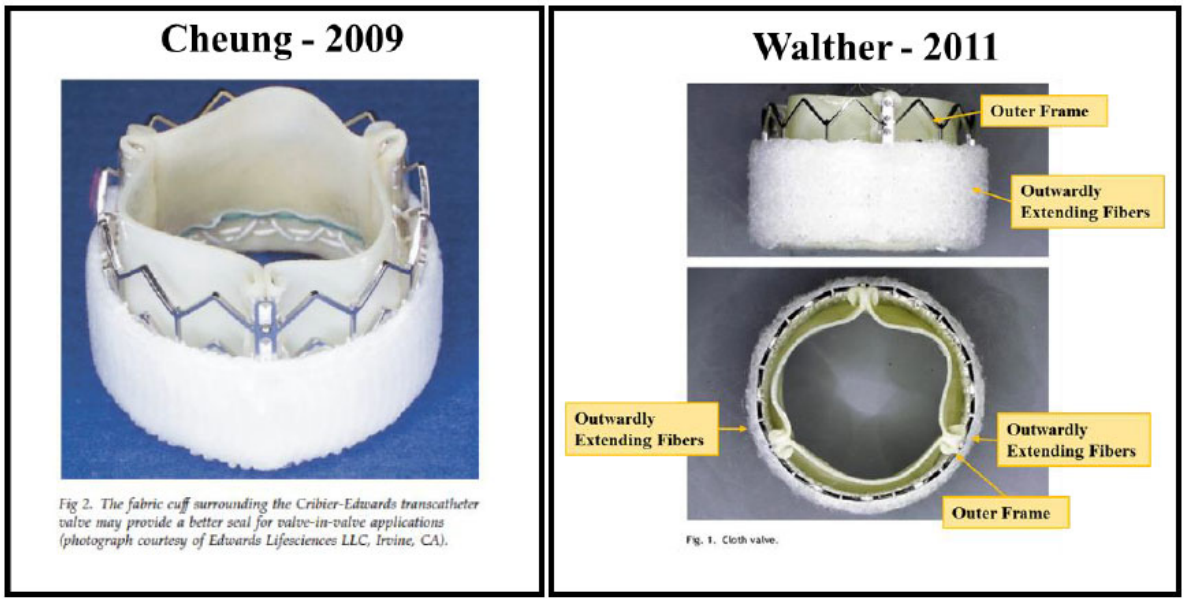

IPR2023-01151, Paper 1 [Petition] at 12, 31.

66. In light of at least the foregoing, it is my opinion that Edwards's construction of "fibers" which is limited to collagen threads or filaments is too narrow and should not be adopted. Instead, I agree with Aortic that the term should be given its plain and ordinary meaning as I discuss above.

3. "Plurality of fibers"

Term	Claims	Aortic construction	Edwards construction
"plurality of fibers"	'834 Patent – Claims 2, 9, 17, 18; '634 Patent – Claims 1-7, 9; '918 Patent – Claims 10, 17, 21-22, 26	Plain and ordinary meaning	An arrangement of fibers that does not form a dense band or cloth

67. The term "plurality of fibers" appears in multiple claims in the patents-in-suit as reflected in the table above. In my opinion, this term as used in the patents-in-suit has its plain and ordinary meaning in the art and requires no further construction. This is reflected, for example, in Figs. 20-22 in the patents-in-suit which show low profile fiber sealing with multiple fibers. This is

also consistent with the plain meaning of "plurality"—"composed of more than one member, set, or kind; the state or fact of being plural." American Heritage College Dictionary (4th ed. 2007) at 1072. Here, "plurality of fibers" simply refers to more than one fiber.

68. Edwards' construction requiring "an arrangement of fibers that does not form a dense band or cloth" is incorrect, because it adds in exclusions that are not required or consistent with how a POSA would understand this term. Indeed, nothing in the claims, specification, or prosecution history require that the claimed "plurality fibers" exclude all "dense bands or cloth." When reviewing the specification and the prosecution history, I did not see any statements by Aortic disavowing or disclaiming all dense bands or cloths. Edwards' argument here appears similar to its assertion in the *Aortic I* case regarding the "outer seal" claim there. There Edwards asserted that an "outer seal" should be construed to mean "An outer covering through which the outer frame is clearly visible." I understand that the Court rejected Edwards' argument in the *Aortic I* case and construed "outer seal" to have its plain meaning. Edwards appears to make this same argument in a different form here, asserting that the plurality of fibers cannot be "dense." Accordingly, I disagree with Edwards' construction for similar reasons to those in the *Aortic I* matter.

69. Edwards's construction is also problematic because—instead of helping to define the term—it adds ambiguity. For example, it is unclear what Edwards means by "dense band or cloth" in its construction—i.e., it is unclear whether Edwards' construction would exclude any cloth or just dense cloths. This further demonstrates that Edwards' construction is flawed.

70. I further note that Edwards' position is inconsistent with its positions taken in the IPRs. For example, the art identified by Edwards in its IPRs was not limited to a "plurality of

fibers" that excluded all dense bands or cloth. Rather, Edwards IPR arguments utilize references like Spencer II which references a cloth.

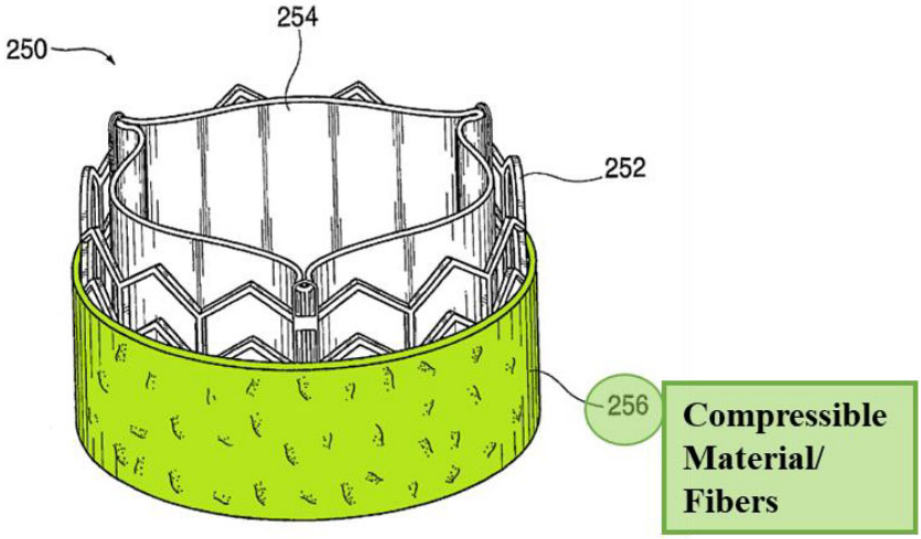

FIG. 22

IPR2023-01151, Paper 1 [Petition] at 21.

71. Thus, it is my opinion that Edwards's construction of "plurality of fibers" is inconsistent with the plain meaning of the term to a POSA, is unwarranted by the claims, specification and prosecution history, and should not be adopted. Instead, I agree with Aortic that the term should be given its plain and ordinary meaning as I discuss above.

4. "Sealing material"/"Sealing assembly"

Term	Claims	Aortic construction	Edwards construction
"sealing material"	'310 Patent – Claims 11, 13; '918 Patent – Claims 1, 4-9, 16, 20	Plain and ordinary meaning	An arrangement of fibers that does not form a dense band or cloth
"sealing assembly"	'033 Patent – Claims 1, 5	Plain and ordinary meaning	An arrangement of fibers that does not form a dense band or cloth

72. The term "sealing material" appears in multiple claims in the '310 and '918 Patents as reflected in the table above. Likewise, the term "sealing assembly" appears in claims 1 and 5 of the '033 patent. In my opinion, these terms as used in these patents have their plain and ordinary meaning in the art and require no additional construction. For example, claim 11 of the '310 patent provides that the "sealing material" "is positioned externally to the frame for providing sealing between the frame and a patient's anatomical wall to prevent paravalvular leaks." Claim 11 further specifies that the "sealing material" "is attached to the frame," "extends over at least a first two rows of cells in the frame," and "includes a plurality of outwardly extending, arcuate fibers that extend outwardly of the frame." Similarly, for the term "sealing assembly," claim 1 of the '033 Patent provides that the "sealing assembly" "includes a plurality of arcuate fibers that extend away from the frame for providing sealing against paravalvular leakage," "extends over … at least two rows of cells," and "lays against the frame when the prosthetic heart valve assembly is in the radially compressed orientation and the radially expanded orientation." Likewise, the figures such as Figs. 20-22 show examples of such "sealing materials" and "sealing assemblies" and the specification describes embodiments where the frame may be covered with fibers or other sealing materials. '834 Patent, col. 18:39-41. Accordingly, a POSA would understand the "sealing material" and "sealing assembly" to be used according to their plain meaning in the patents-in-suit and not require further definition beyond how these terms are already defined in the claims.

73. As I discuss above for the "plurality of fibers" term, Edwards' construction requiring "an arrangement of fibers that does not form a dense band or cloth" is incorrect, because it adds in exclusions that are not required or consistent with how a POSA would understand this term. Nothing in the claims, specification, or prosecution history require that the claimed "sealing material" or "sealing assembly" exclude all "dense bands or cloth." When reviewing the

specification and the prosecution history, I did not see any statements by Aortic disavowing or disclaiming all dense bands or cloths. Edwards' argument here appears similar to its assertion in the *Aortic I* case regarding the "outer seal" claim there. There Edwards asserted that an "outer seal" should be construed to mean "An outer covering through which the outer frame is clearly visible." I understand that the Court rejected Edwards' argument in the *Aortic I* case and construed "outer seal" to have its plain meaning. Edwards appears to make this same argument in a different form here asserting that the "sealing material" and "sealing assembly" cannot be "dense." Accordingly, I disagree with Edwards' construction for similar reasons to those in the *Aortic I* matter.

74. Edwards's constructions are also problematic because—instead of helping to define the terms—they add ambiguity. For example, it is unclear what Edwards means by "dense band or cloth" in its constructions—i.e., it is unclear whether Edwards' constructions would exclude all cloths or just dense cloths. This further demonstrates that Edwards' constructions are incorrect.

75. I further note that Edwards' position is inconsistent with its positions taken in the IPRs. For example, the art identified by Edwards in its IPRs was not limited to a "sealing assembly" that excluded all dense bands or cloth. Rather, Edwards IPR arguments utilize references like Spencer II which references a cloth.

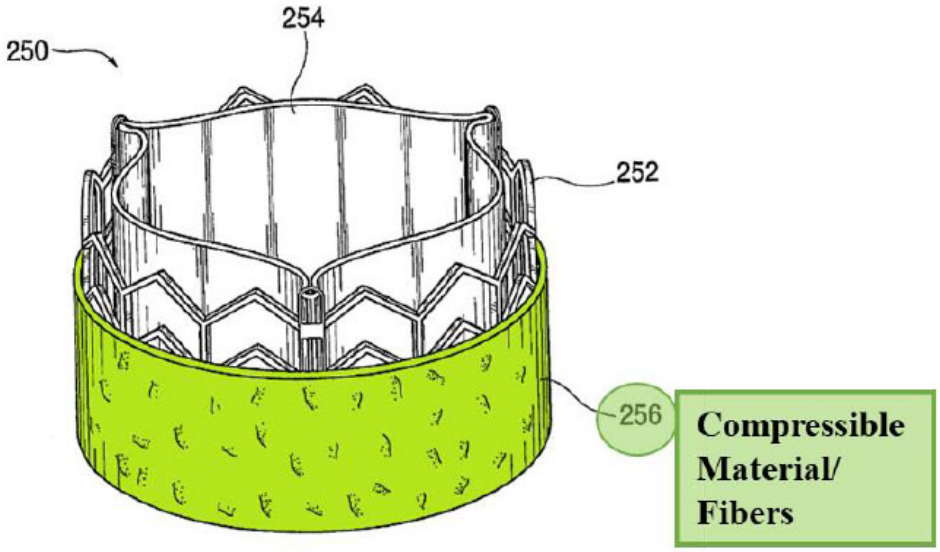

FIG. 22

IPR2023-01325, Paper 2 [Petition] at 29.

76. In light of the foregoing, it is my opinion that Edwards's constructions of "sealing material" and "sealing assembly" are inconsistent with the plain meaning of the term to a POSA, too restrictive, and should not be adopted. Instead, I agree with Aortic that the terms should be given their plain and ordinary meaning as I discuss above.

5. "Second plurality of fibers"/"Second layer"

Term	Claims	Aortic construction	Edwards construction
"second plurality of fibers"	'834 Patent – Claims 2, 9, 17; '918 Patent – Claims 5, 10, 17	Plain and ordinary meaning	An arrangement of fibers that extend radially inwardly from the frame that does not form a dense band or cloth
"second layer"	'918 Patent – Claims 21-22, 26	Plain and ordinary meaning	An arrangement of fibers that extend radially inwardly from the frame that does not form a dense band or cloth

77. The term "second plurality of fibers" appears in multiple claims in the '834 and '918 Patents as reflected in the table above. Likewise, the term "second layer" appears in claims 21-22 and 26 of the '918 patent. In my opinion, these terms are already defined in the claims, have their plain and ordinary meaning in the art, and require no additional construction. For example, claim 10 of the '918 patent provides that the "second plurality of fibers" is "positioned inwardly from the first plurality of fibers," "is in direct contact with the frame," and "radially overlap" with the first plurality of fibers "to cooperatively cover the frame." Similarly, for the term "second layer" claim 21 of the '918 Patent provides that the "second layer" "form[s] a seal upon compression," "is positioned radially inwardly from the first layer," "is in direct contact with the frame," and "defines a spacing extending through a thickness of the second layer for passage of fluid therethrough prior to forming a seal upon compression." Likewise, the figures such as Figs. 12 and 13 provide examples of a "second plurality of fibers" and a "second layer." '834 Patent, Figs. 12 and 13. Thus, it is my opinion that a POSA would understand the terms "second plurality of fibers" and "second layer" to be used according to their plain meaning in the claims of the patents-in-suit and do not require further definition beyond how these terms are defined in the claims.

78. Edwards offers a similar construction for "second plurality of fibers" and "second layer" as it does for "plurality of fibers", "sealing material" and "sealing assembly". As I discuss above for those terms, Edwards' construction requiring "an arrangement of fibers … that does not form a dense band or cloth" is incorrect, because it adds in exclusions that are not required or consistent with how a POSA would understand this term. Nothing in the claims, specification, or prosecution history require that the claimed "second plurality of fibers" and the "second layer"

exclude all "dense bands or cloth." When reviewing the specification and the prosecution history I did not see any statements by Aortic disavowing or disclaiming all dense bands or cloth.

79. Edwards also requires that "second plurality of fibers" and the "second layer" have fibers that extend "radially inwardly from the frame." While, some of this figures in the patents-in-suit show fibers that extend radially inwardly from the frame, this is not a requirement of the claims. Rather, claims 10 and 21 of the '918 patent, specify that the "second plurality of fibers" and "second layer" are "positioned radially inwardly from the" first plurality of fibers/first layer—not that they extend radially inwardly from the frame. Also, I did not see any requirements in the specification or prosecution history requiring all "second plurality of fibers" or "second layers" to extend inwardly from the frame. Accordingly, I disagree with Edwards' constructions.

80. Also, as I note above—instead of helping to define the term—Edwards' constructions adds ambiguity. For example, it is unclear what Edwards means by "dense band or cloth" in its constructions—i.e., it is unclear whether Edwards' constructions would exclude all cloths or just dense cloths. This further demonstrates that Edwards' constructions are flawed.

81. I further note that Edwards' position is inconsistent with its positions taken in the IPRs. For example, the art identified by Edwards in its IPRs was not limited to a "second plurality of fibers" that excluded all dense bands or cloth with fibers that extend radially inwardly from the frame. Rather, Edwards IPR arguments utilize references like Spencer II and Edwards has argued that Spencer II's "inner cloth/fabric layer is the 'second plurality of fibers,' which is positioned radially inwardly from the first plurality of fibers." IPR2023-01151, Paper 1 [Petition] at 46.

82. In light of the foregoing, it is my opinion that Edwards's constructions of "second plurality of fibers" and "second layer" are inconsistent with the plain meaning of these terms to a POSA, particularly in light of the claim language, and should not be adopted. Instead, I agree with

Aortic that the terms do not require further construction and should be given their plain and ordinary meaning as I discuss above.

6. "Spacing(s)"

Term	Claims	Aortic construction	Edwards construction
"spacing(s)"	'834 Patent – Claims 2, 17, 18; '033 Patent – Claims 1, 5; '634 Patent – Claims 1-7, 9; '918 Patent – Claims 1, 4-10, 16-17, 20-22, 26	Plain and ordinary meaning	This term is indefinite under pre-AIA 35 U.S.C. § 112, second paragraph. If the Court does not conclude that this term is indefinite, the Court should construe this term to mean "a distance between fibers such that the fibers do not form a sleeve, layer, or cloth."

83. I discuss the term "spacings" in my IPR declarations including IPR2022-00556, Ex. 2103 (Brecker Decl.). I incorporate my discussion of "spacings" from those declarations herein. The term "spacing(s)" appears in multiple claims in the '834, '033, '634, and '918 Patents as reflected in the table above.

84. Regarding "spacing(s)" the claims specify:

- '834 Patent, Claim 2: "The prosthetic heart valve of claim 1, wherein the second plurality of fibers defines a spacing extending through a thickness thereof that is created by a distance between adjacent fibers, wherein the spacing extends to the frame";
- '834 Patent, Claim 17: "wherein the prosthetic heart valve defines a spacing extending through a thickness of the first plurality of fibers that is created by a distance between adjacent fibers thereof, through a thickness of the second

plurality of fibers created by a distance between adjacent fibers thereof, and through the plurality of cells of the frame";

- '834 Patent, Claim 18: "wherein the prosthetic heart valve defines a spacing extending through a thickness of the plurality of fibers that is created by a distance between adjacent fibers thereof through the plurality of cells of the frame";
- '033 Patent, Claim 1: "wherein the prosthetic heart valve assembly defines spacings extending through a thickness of the sealing assembly that allow fluid to pass therethrough when the prosthetic heart valve assembly is in an undeployed state";
- '634 Patent, Claim 1: "wherein the fibers are spaced-apart to define spacings in a radially extending direction from the outermost aspect of the fibers to the outer surface of the frame such that fluid is permitted to pass therethrough when the valve assembly is in an uncompressed state";
- '918 Patent, Claim 1: "wherein the fibers are spaced-apart to define spacings in a circumferentially extending direction and an axially extending direction along an outer surface of the frame, wherein the spacings extend radially through a thickness of the sealing material beginning at an outermost portion of the fibers and extending to the frame";
- '918 Patent, Claim 10: "wherein the prosthetic heart valve defines a spacing extending through a thickness of the first plurality of fibers that is created by a distance between fibers thereof and through a thickness of the second plurality";

- ’918 Patent, Claim 21: “wherein the second layer defines a spacing extending through a thickness of the second layer for passage of fluid therethrough prior to forming a seal upon compression of fibers created by a distance between fibers thereof”

85. It is my opinion, that the term “spacings” is used according to its plain and ordinary meaning in the art in the identified claims of the patents-in-suit to refer to voids or gaps that extend through the plurality of fibers/sealing material/sealing assembly/second layer and requires no further construction. This understanding is consistent with the figures in the patents-in-suit which provide examples of the “spacings.” ’834 patent, Figs. 11 and 12. I also note that during prosecution, Aortic identified examples of spacings in the figures. For example, regarding Fig. 11, Aortic provided the following annotation to the examiner:

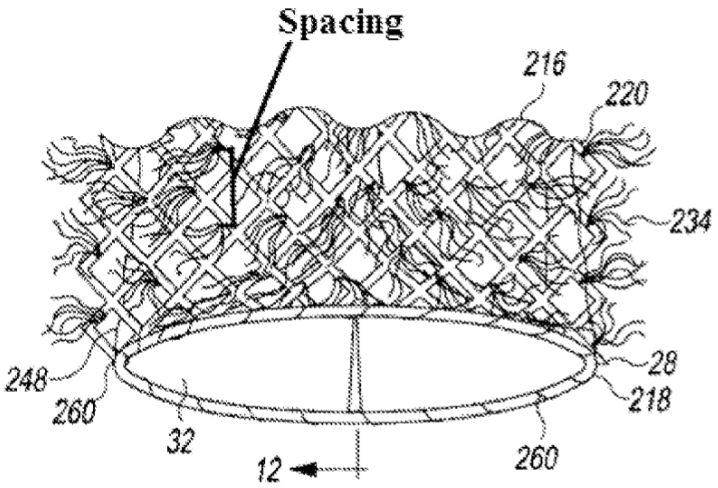

Fig. 11

86. Regarding, Figure 12, Aortic provided the following annotation to the examiner:

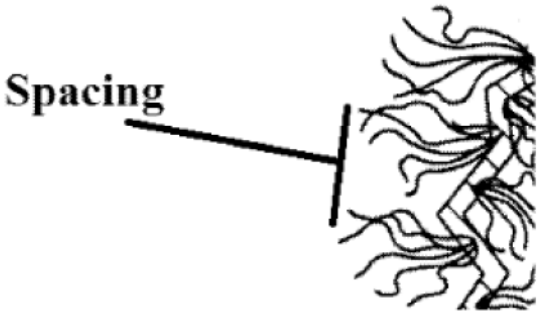

87. I also note that during prosecution of the ’834 Patent in the examiner’s notice of allowance, the examiner states: “The prior art does not disclose or render obvious the prosthetic heart valve defining a ***spacing*** extending through a thickness of the plurality of fibers that is created by a distance between adjacent fibers thereof through the plurality of cells of the frame.” U.S. Patent App. No. 17/327,673, Notice of Allowance (dated Jan. 25, 2022) at 2 (emphasis added).

88. I further note that I previously explained in my IPR declaration: “[A]s is particularly clear in Figure 13 (but also present elsewhere), there are gaps and spaces between the fibers that extend to the frame. These gaps and spaces were, I believe, counterintuitive because a POSITA would have, at the time, favored a solid, non-porous, graft material to address PVL—like the ones seen in Walther, Spenser II, and Levi...” IPR2022-00556, Ex. 2103 (Brecker Decl.) ¶160.

89. I also included the following figures in my declaration in IPR2023-01151 regarding the ’834 patent showing examples of spacings and no spacings.

In Contrast To Fig. 13's Spaces, Spenser II's Compressible Material Depicts A "Solid, Non-porous, Graft Material"	
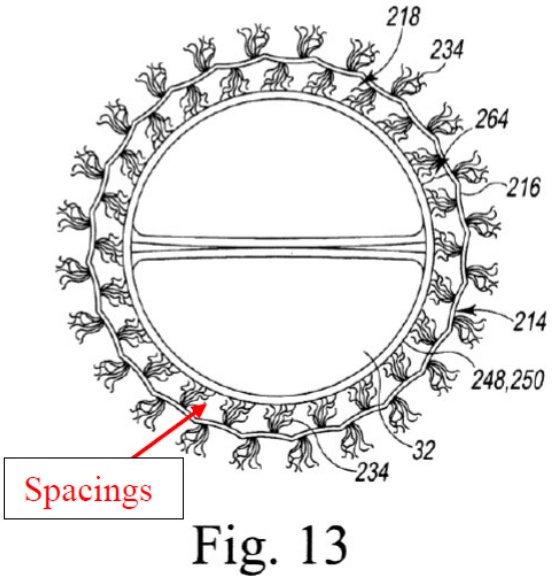 Fig. 13	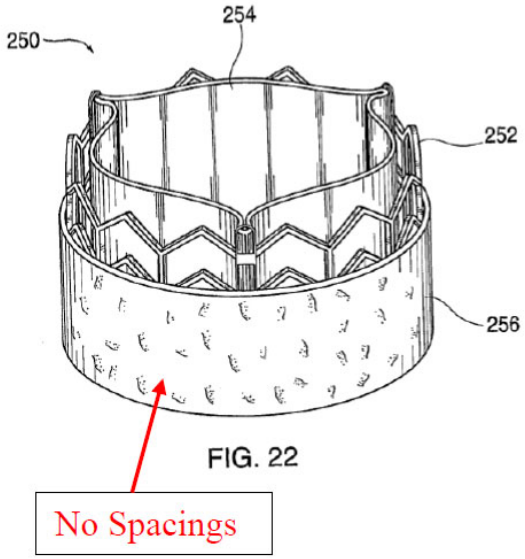

IPR2023-01151, Ex. 2002, 27.

90. Additionally, the plain meaning of the term "spacings" is consistent with the claims in U.S. Patent App. No. 17/748,073.

> wherein the radially extending, arcuate fibers have [[a]] lengths that collectively span[[s]] across the spacings along the circumference and length of the valve assembly,

U.S. Patent App. No. 17/748,073, Amendment (October 3, 2023) at 4; Amendment (dated April 26, 2023) at 4.

91. Edwards contends that the term "spacing(s)" is indefinite. I disagree. As I explain above, a POSA would have been able to understand the meaning of the term with reasonable certainty. This is reflected, for example, in the examiner's notice of allowance for the '834 Patent, my IPR declarations, and my discussion above.

92. Edwards asserts alternatively, that "spacings" are "a distance between fibers such that the fibers do not form a sleeve, layer, or cloth". I also disagree with Edwards' alternative construction. As with many of its other proposed constructions, Edwards attempts to add in exclusions of all sleeves, layers, and cloths. But, I did not see any disavowal or disclaimer in the specification, claims, for the prosecution history requiring that all sleeves, layers, and cloths be excluded from the term "spacings." In fact, Edwards construction expressly conflicts with the plain claim language because claim 21 of the '918 patent specifies "a spacing extending through a thickness of the second layer". Because claim 21 expressly specifies a layer with spacings and Edwards construction precludes having spacings in a layer, the two are in direct conflict. Accordingly, I disagree with Edwards' alternative construction for the "spacing(s)" term.

7. "Distinct layers"

Term	Claims	Aortic construction	Edwards construction
"distinct layers"	'918 Patent – Claim 22	Plain and ordinary meaning	Layers positioned on opposite sides of the frame.

93. The term "distinct layers" appears in claims 22 of the '918 patent. It is my opinion, that the term "distinct layers" is used according to its plain and ordinary meaning in the art in the '918 patent and requires no further construction. Claim 22 of the '918 Patent specifies "wherein the first layer and the second layer are distinct layers." '918 patent, claim 22. Figs. 12 and 13 of the patents-in-suit show examples of distinct layers of fibers—i.e., layers that are distinguishable from one another. This understanding is also consistent with the plain and ordinary meaning of the term "distinct". *See, e.g.,* Distinct, American Heritage College Dictionary (4th ed. 2007) at 411 ("easily perceived by the senses or intellect; clear; very likely; probable").

94. Edwards' construction for "distinct layers" is "layers positioned on opposite sides of the frame". But, Edwards' construction ignores the term "distinct" and attempts to read in features from the exemplary figures that are not required by the claims. Indeed, I did not see anything in the specification or file history requiring that distinct layers be positioned on opposite sides of the frame. For at least these reasons, I disagree with Edwards' proposed construction.

8. "Outwardly extending fibers"/"Outwardly extending"

Term	Claims	Aortic construction	Edwards construction
"outwardly extending fibers"	'310 Patent – Claims 11, 13; '634 Patent – Claims 1-7, 9; '918 Patent – Claims 1, 4-9, 16, 20	Plain and ordinary meaning	The tips of the fibers extend in a generally outward direction from the frame
"outwardly extending"	'310 Patent – Claims 11, 13; '634 Patent – Claims 1-7, 9; '918 Patent – Claims 1, 4-9, 16, 20	Plain and ordinary meaning	The tips of the fibers extend in a generally outward direction from the frame

95. The terms "outwardly extending fibers" and "outwardly expending" are used in the claims of the '310, '634 and '918 patents. It is my opinion, that the terms "outwardly extending fibers" and "outwardly extending" are used according to their plain and ordinary meaning in the art in the patents-in-suit to refer to fibers that extend in a generally outward direction. '834 patent, col. 18:37-38 ("The fibers 234 extend outwardly from the proximal section 220."); Figures 11-13, 20. I previously provided a declaration in the *Aortic I* matter regarding the "outwardly extending fibers" term which I incorporate herein. I further understand that the Court previously construed the term "outwardly extending fibers" consistent with my understanding of the term.

96. Edwards construction of "outwardly extending fibers" and "outwardly extending"—*i.e.*, "the tips [of the fibers] extend in a generally outward direction from the frame"—is incorrect because it requires that the fibers have linear "tips" that "extend in a generally outward direction from the frame". But, these features are not required by the plain language of the claims which do not specify "tips" much less linear "tips" that "extend in a generally outward direction from the frame". Moreover, I did not see any statements made by Aortic in the specification or prosecution history statements requiring Edwards' limitation. The word "tips" does not appear anywhere in the specification. In fact, the specification of the patents-in-suit teach that the *fibers* extend outwardly—not the linear "tips" of the fibers. '834 patent, col. 18:37-38 ("The fibers 234 extend outwardly"). Further, the figures of the patents-in-suit show in some examples of arcuate fibers with linear ends of fibers that curve around even though the fiber itself extends outwardly.

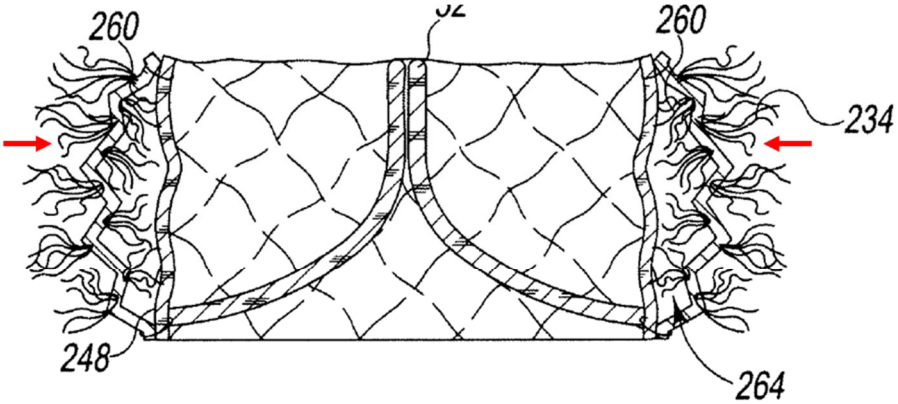

Fig. 12

'834 Patent, Figure 12; see also Figure 9. I further note that the claims themselves specify "outwardly extending" arcuate fibers. For example, claim 11 of the '310 patent specifies "a plurality of outwardly extending, arcuate fibers that extend outwardly of the frame." Accordingly, Edwards' construction—which appears to require that the linear "tips of the fibers extend in a

generally outward direction from the frame"—is inconsistent with the full disclosures in the specification, figures, and the claims.

97. Finally, I note that the U.S. Patent Office did not review or interpret the similar claims in a related patent in the narrow way that Edwards advances here. In the April 30, 2021 Office Action during prosecution of the '735 patent, for example, the U.S. Patent Office rejected the "outwardly extending fibers" elements based on the Greenhalgh reference, Figure 4. Greenhalgh Figure 4 shows outwardly extending loops of fibers that do not include the tips requirements that Edwards advances here.

> 24. Greenhalgh discloses a stent graft with a sealing material (22) positioned outside of a stent graft area (frame/stent 20) (Fig. 1). Greenhalgh also discloses in paragraph 36, that the graft can be coated with a bioactive substance such as collagen. Greenhalgh discloses fibers positioned radially outwardly of the outer frame that forms a first sealing interface against the annulus and native valve leaflets of the patient when the first portion of fibers are compressed thereagainst, wherein the first portion of fibers extend radially outwardly of the outer frame (See Figs. 4-5, radially extending fibers, 23/28);.

U.S. Patent App. No. 17/170,957 ('735 Patent Prosecution History, April 30, 2021 Non-Final Rejection) at 7-8.

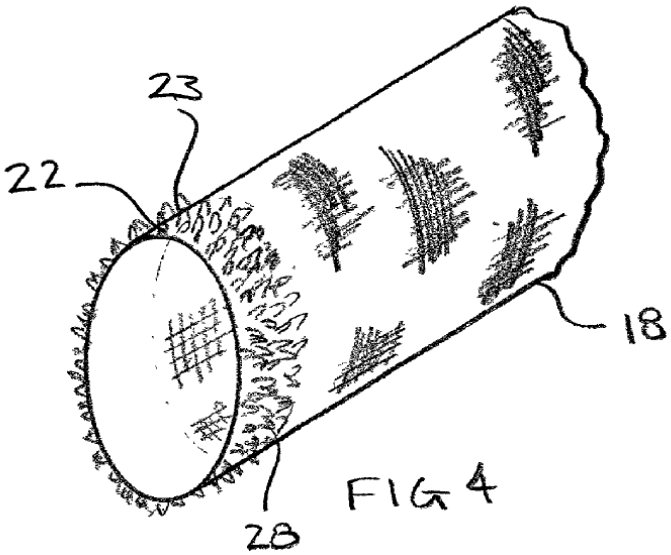

U.S. Patent App. Pub. No. 2002/0052649 (Greenhalgh) at Figure 4 (showing outwardly extending fiber loops).

98. Because Edwards' construction conflicts with the Court's prior construction and attempts to read in a linear tip limitation that is not required by the claims, the specification, or the prosecution history, I disagree with Edwards' construction. Instead, I agree with Aortic that the terms "outwardly extending fibers" and "outwardly extending" should be given their plain and ordinary meanings consistent with the Court's prior construction—i.e. that the fibers extend in a generally outward direction—as supported by the figures and specification of the patents-in-suit.

9. "Apices" Terms

Term	Claims	Aortic construction	Edwards construction
"end of the apices of the frame that are most proximal are uncovered by the fibers and the graft covering such that an end of the most proximal apices of the frame extends more proximally than	'634 Patent – Claims 1-7, 9	Plain and ordinary meaning	Limitation refers to the valve when it is in the expanded, undeployed configuration.

a most proximal one of the plurality of fibers"			
"end of the most proximal apices of the frame are uncovered by sealing material and the graft covering, wherein the end of the most proximal apices of the frame extends more proximally than a proximal end of the sealing material"	'918 Patent – Claim 8	Plain and ordinary meaning	Limitation refers to the valve when it is in the expanded, undeployed configuration.

99. The term "end of the apices of the frame that are most proximal are uncovered by the fibers and the graft covering such that an end of the most proximal apices of the frame extends more proximally than a most proximal one of the plurality of fibers" appears in claim 1 of the '634 patent. The term "end of the most proximal apices of the frame are uncovered by sealing material and the graft covering, wherein the end of the most proximal apices of the frame extends more proximally than a proximal end of the sealing material" appears in claim 8 of the '918 patent. It is my opinion that both of these terms are understandable to a POSA as written and do not require any further construction. Both terms refer to the proximal apices of the frame having the specified characteristics of being uncovered and extending more proximally than a most proximal one of the plurality of fibers/a proximal end of the sealing material. This is reflected, for example, in Figs. 20 and 22 of the patents-in-suit which provide examples of proximal apices as claimed.

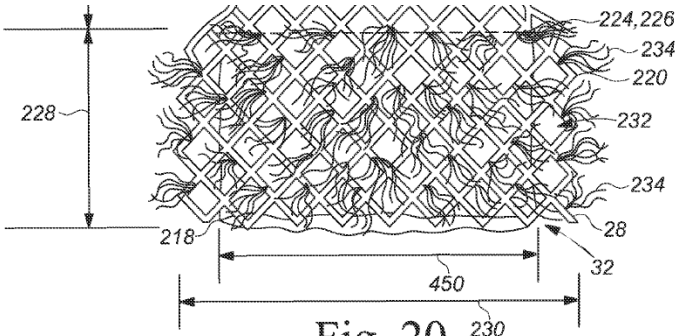

Fig. 20

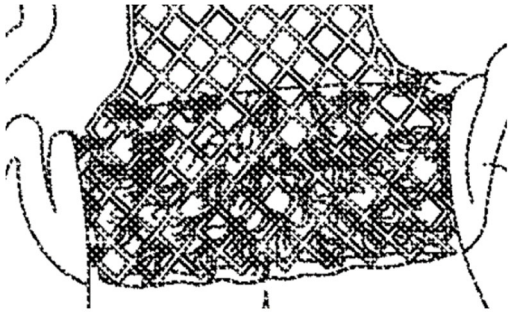

Fig. 22

100. Edwards' construction seeks to limit both of the "apices" terms to require an expanded undeployed configuration. But, I did not see anything in the claims, specification, or prosecution history that required limiting these terms to only an expanded, undeployed configuration or any other particular configuration for that matter. Indeed, as I note above, Fig. 22 provides examples of apices terms which Edwards' construction would exclude where the TAVR is shown implanted within the patient, and thus not simply in an expanded, undeployed configuration as advocated for by Edwards. This is because the configuration in Fig. 22 is an expanded deployed configuration. Accordingly, I disagree that Edwards' construction correct.

X. RESERVATION OF RIGHTS

101. Edwards has not yet provided any expert declaration on claim construction in this matter. Accordingly, I reserve the right to rebut, amend, supplement, or otherwise modify my opinions and supporting evidence contained herein.

Stephen Brecher

October 27, 2023 Dr. Stephen J.D. Brecker

EXHIBIT A

C U R R I C U L U M V I T A E

STEPHEN JON DAVID BRECKER

EMAIL :	stephenbrecker@outlook.com (personal) sbrecker@medicard.onmicrosoft.com (professional) brecker.stephen@mayo.edu (professional)
NATIONALITY :	British
DATE OF BIRTH :	30th April 1960

GENERAL EDUCATION

1973-1978	University College School, London, UK

UNDERGRADUATE EDUCATION

1978-1984	St. Thomas' Hospital Medical School University of London, UK

QUALIFICATIONS

1981	BSc (Hons 2,i) Pharmacology and Basic Medical Sciences
1984	MB, BS with Distinction
1987	MRCP (UK)
1993	MD
1999	FESC
1999	FACC
2000	FRCP

M.D. THESIS Systolic and Diastolic Interactions in Ventricular Disease
University of London : 1993

CURRENT APPOINTMENTS

Consultant Cardiologist & Professor of Cardiology

St. George's University Hospitals NHS Foundation Trust,
London, UK & St. George's, University of London, UK

&

Mayo Clinic Healthcare, London, UK

PREVIOUS APPOINTMENTS

2023	Consultant Cardiologist, Mayo Clinic Healthcare, London
2016	Professor of Cardiology, St George's University of London
2015 – 2021	Chief of Cardiology, Clinical Academic Group St. George's University Hospitals NHS Foundation Trust, London, UK & St. George's University of London, UK
2006-2010	Care Group Lead - Cardiology
2005-2010	Director of Cardiac Catheterisation Laboratories
2005-2006	Clinical Lead, South West London Cardiac Network
1998-2020	Recognised Teacher of the University of London
1996	Consultant Cardiologist St George's University Hospitals NHS Foundation Trust, London, UK

HONOURS, AWARDS AND PRIZES

1980	Grainger Testimonial Prize in Pharmacology
1981	Medical Research Council BSc Scholarship
1982	Lord Riddell Surgical Prize - Proxime accessit
1983	Second Charles Box Medical Prize (Clinical Medicine)
1983	Gladstone, Stansfield, Stewart Memorial Bursary
1984	Distinction in Pathology (London Part IV MB,BS)
1990	British Heart Foundation Junior Research Fellowship
1991	E. Merck Travelling Scholarship
1992	1st Runner Up, Rhône-Poulenc Rorer / Junior Cardiac Club Travelling Scholarship - Investigators Awards
2000	South Thames Department of Postgraduate Medical & Dental Education, University of London Certificate in Teaching

PREVIOUS APPOINTMENTS

April 1994 - April 1996	**Clinical Lecturer and Honorary Senior Registrar in Cardiology The London Chest Hospital, The Royal Hospitals NHS Trust, London.**
April 1993 - April 1994	**Waring Lecturer and Honorary Senior Registrar in Cardiology The Royal Brompton National Heart and Lung Hospital & The National Heart and Lung Institute, London.**
October 1990 - April 1993	**British Heart Foundation Junior Research Fellow, & Honorary Registrar in Cardiology, The Royal Brompton National Heart and Lung Hospital & The National Heart and Lung Institute, London.**
May 1989 - October 1990	**Registrar in Cardiology, The London Chest Hospital, London.**
November 1988 - May 1989	**Registrar in General Medicine and Cardiology, St. Thomas' Hospital, London.**
November 1987 - October 1988	**Registrar in General Medicine, Kingston Hospital, Surrey.**
May 1987 - October 1987	**Senior House Officer in Neurology, The National Hospital for Nervous Diseases, Queen Square, London.**
August 1986 - February 1987	**Senior House Officer in Cardiology, Brompton Hospital, London.**
February 1986 - July 1986	**Senior House Officer, Intensive Therapy Unit, St. Thomas's Hospital, London.**
August 1985 - January 1986	**Senior House Officer, Department of Renal Medicine and Immunology, Hammersmith Hospital and Royal Postgraduate Medical School, London.**
February 1985 - July 1985	**House Physician to The Medical Unit, St. Thomas's Hospital, London.**
August 1984 - January 1985	**House Surgeon, Kingston Hospital, Surrey.**

COURSES ORGANISED

Annual Transoesophageal Echocardiography Course
1995 – 1996 **The London Chest Hospital, London**
1997 – 2016 **St. George's Hospital, London**

REVIEWER FOR JOURNALS

Circulation, Journal of the American College of Cardiology, Heart, European Heart Journal, Lancet, Nature Clinical Practice Cardiovascular Medicine, American Journal of Cardiology, EuroIntervention, European Heart Journal Cardiovascualr Imaging, Clinical Cardiology, International Journal of Cardiology, Catheterization and Cardiovascular Interventions, Drug & Therapeutics Bulletin, European Journal of Cardiac Pacing and Electrophysiology, Journal of Cardiovascular Risk, Intensive Care Medicine and Thorax.

2001 SCIENTIFIC SESSION ABSRACT GRADER

European Society of Cardiology, American College of Cardiology, Transcatheter Cardiovascular Therapeutics, British Cardiovascular Society.

FELLOWSHIP & MEMBERSHIP OF SOCIETIES

Fellow of the Royal College of Physicians

Fellow of the European Society of Cardiology

Fellow of the American College of Cardiology

British Cardiovascular Society

British Cardiovascular Intervention Society

British Society of Echocardiography

PATENT APPLICATIONS

25.09.13	Replacement Heart Valve	GB 2500432
25.09.13	Replacement Heart Valve	EP 2 641 570 A1
26.09.13	Replacement Heart Valve	US 2013/0253642 A1

AWARDED PATENTS

10.02.16	Percutaneous Guidewire	EP 2 396 067 B1
15.05.18	Percutaneous Guidewire	US 9 968 761 B2

GRANTS

01.06.16	MEDTRONIC RESEARCH FELLOW AWARD	£96000
01.06.16	MCS SMALL GRANTS AWARD	£5600
01.06.17	MCS SMALL GRANTS AWARD	£5600
01.06.18	MCS SMALL GRANTS AWARD	£5750

PUBLICATIONS

Books

A Timmis, **S Brecker**. *Diagnosis in Color*. *Cardiology*. London. Mosby-Wolfe. 1997.

S J Brecker, R H Anderson. *The Adult Heart*. London. Imperial College Press. 2000.

S J D Brecker. *Percutaneous Device Closure of the Atrial Septum.* Abingdon. Informa Healthcare. 2006.

S Brecker, M Rothman. *Clinical Guide to Primary Angioplasty.* London. Informa Healthcare. 2010

2002

2003 **Videotape and accompanying book**

S J Brecker, R H Anderson. *Echo-morphologic correlates: The adult heart.* London. Imperial College Press. 2000.

Book Chapters

S J D Brecker, P J Oldershaw. Echocardiography. In : A Martin, A J Camm (eds). *Geriatric Cardiology. Principles and Practice*. Chichester. John Wiley & Sons Ltd. 1994, 91-129.

S J D Brecker. Transoesophageal echocardiography. In : A Redington, D Shore, P Oldershaw (eds). *Congenital Heart Disease in Adults: A Practical Guide*. London. W. B. Saunders Company Ltd. 1994, 17-27.

S J D Brecker. Atrial septal defect. In : A Redington, D Shore, P Oldershaw (eds). *Congenital Heart Disease in Adults: A Practical Guide*. London. W. B. Saunders Company Ltd. 1994, 103-110.

S J D Brecker. Ventricular septal defect. In : A Redington, D Shore, P Oldershaw (eds). *Congenital Heart Disease in Adults: A Practical Guide*. London. W. B. Saunders Company Ltd. 1994, 111-117.

S J D Brecker. Atrial septal defect. In : R Pounder, M Hamilton (eds). *Handbook of Current Diagnosis & Treatment*. London. Current Medicine Inc., Churchill Livingstone. 1995, 52-53.

S J D Brecker. Eisenmenger complex. In : R Pounder, M Hamilton (eds). *Handbook of Current Diagnosis & Treatment*. London. Current Medicine Inc., Churchill Livingstone. 1995, 124-126.

S J D Brecker. Heart block. In : R Pounder, M Hamilton (eds). *Handbook of Current Diagnosis & Treatment*. London. Current Medicine Inc., Churchill Livingstone. 1995, 176-178.

S J D Brecker, M T Rothman. Implant complications and management. In : U Sigwart (ed). *Endoluminal Stenting*. London. W. B. Saunders Company Ltd. 1996, 296-305.

S J D Brecker, M T Rothman. 1997. The Cordis coronary stent. In : P W Serruys (ed). *Handbook of Coronary Stents*. London. Martin Dunitz Ltd. 1997, 63-69.

R Sharma, **S J Brecker**. Echocardiography. In : H Purcell, A Kalra (eds). C*ardiology*. Edinburgh. Elsevier Mosby Ltd. 2005, 51-57.

M Hickman, **S Brecker**. Tips and tricks of atrial septal defect closure. In : M Sabate (ed). *Percutaneous Cardiac Interventions. Tips and Tricks of New Techniques Beyond Stenting.* Toulouse. PCR Publishing. 2010, 157-164.

J-C Laborde, **S J D Brecker.** Implantation of the CoreValve aortic valve. In : J D Carroll, J G Webb (eds). *Manual of Adult Structural Heart Disease Interventions.* Philadelphia. Lippincott Williams & Wilkins. 2012, 267-285.

W H Gaasch, **S J D Brecker**, G S Aldea. Transcatheter aortic valve replacement. *UpToDate*. Wolters Kluwer Health 2012-4. www.uptodate.com.

P S Douglas, G S Bloomfield. **S J D Brecker (Ed).** Imaging for transcatheter aortic valve replacement. *UpToDate*. Wolters Kluwer Health 2014-6. www.uptodate.com.

W H Gaasch, **S J D Brecker**, G S Aldea. Transcatheter aortic valve replacement: Outcomes and complications. *UpToDate*. Wolters Kluwer Health 2015. www.uptodate.com.
S J D Brecker, W H Gaasch**,** G S Aldea. Transcatheter aortic valve replacement: Indications and periprocedural management. *UpToDate*. Wolters Kluwer Health 2015. www.uptodate.com.

S J D Brecker, W H Gaasch**,** G S Aldea. Transcatheter aortic valve replacement: Indications. *UpToDate*. Wolters Kluwer Health 2016. www.uptodate.com.

S J D Brecker. Transcatheter aortic valve replacement: Periprocedural management. *UpToDate*. Wolters Kluwer Health 2016-8. www.uptodate.com.

S J D Brecker, G S Aldea. Choice of therapy for symptomatic severe aortic stenosis. *UpToDate*. Wolters Kluwer Health 2017-8. www.uptodate.com.

D Mohty. P A Pellikka, **S J D Brecker (eds)**. Management and prognosis of low gradient aortic stenosis. *UpToDate*. Wolters Kluwer Health 2017-2023. www.uptodate.com.

M Dalby, V Panouolas. **S J D Brecker (ed).** Transcatheter aortic valve implantation : Complications. *UpToDate*. Wolters Kluwer Health 2017-2023. www.uptodate.com.

S Messé, **S J D Brecker**. Treatment of patent foramen ovale (PFO) for secondary stroke prevention. *UpToDate*. Wolters Kluwer Health 2018. www.uptodate.com.

J Leipsic, P Blanke, G S Bloomfield, P S Douglas. **S J D Brecker (ed).** Imaging for transcatheter aortic valve replacement. *UpToDate*. Wolters Kluwer Health 2018-2023. www.uptodate.com.

C Dowling, **S Brecker**. Pure aortic regurgitation treatment. In : P Sorajja (ed). Structural Heart Cases: A Color Atlas of Pearls and Pitfalls. Philadelphia. Elsevier. 2018, 132.

S J D Brecker, G S Aldea. D Cutlip (ed). Choice of intervention for severe calcific aortic stenosis. *UpToDate*. Wolters Kluwer Health 2019-2023. www.uptodate.com.

S J D Brecker. Transcatheter aortic valve implantation: Periprocedural and postprocedural management. *UpToDate*. Wolters Kluwer Health 2019-2023. www.uptodate.com.

A M del Castillo, P Zamorano, P Lancellotti. **S J D Brecker (ed)**. Management and prognosis of surgical aortic and mitral prosthetic valve regurgitation. *UpToDate*. Wolters Kluwer Health 2019-2022. www.uptodate.com.

S Pislaru, H M Connolly. W H Gaasch, **S J D Brecker (eds)**. Diagnosis and management of bioprosthetic valve thrombosis and obstruction. *UpToDate*. Wolters Kluwer Health 2019-2022. www.uptodate.com.

S Messé, **S J D Brecker**. Treatment of patent foramen ovale (PFO) for secondary stroke prevention. *UpToDate*. Wolters Kluwer Health 2019-2022. www.uptodate.com.

S J D Brecker. D Cutlip, J J Bax (eds). Transcatheter aortic valve implantation: Antithrombotic management. Wolters Kluwer Health 2020-2023. www.uptodate.com.

M B Brady, S M Nyhan. J B Mark, **S J D Brecker (eds).** Anesthesia for percutaneous valve interventions. Wolters Kluwer Health 2020-2023. www.uptodate.com.
S Messé, **S J D Brecker**. S E Kasner, H M Connolly (eds). Stroke associated with patent foramen ovale (PFO) : Evaluation. *UpToDate*. Wolters Kluwer Health 2022-2023. www.uptodate.com.

S Messé, **S J D Brecker**. S E Kasner, H M Connolly (eds). Stroke associated with patent foramen ovale (PFO) : Management. *UpToDate*. Wolters Kluwer Health 2022-2023. www.uptodate.com.

Peer Review Editorials and Reviews

S J D Brecker, D G Gibson.
Diagnosis, effects and treatment of subendocardial failure.
Primary Cardiology 1994; **20**:19-25.

J N Shephard, **S J Brecker**, T W Evans.
Bedside assessment of myocardial performance in the critically ill.
Intensive Care Medicine 1994; **20**:513-521.

S J D Brecker.
Myocardial infarction in patients with normal coronary arteries.
Annals of Medicine 1994; **26**:383-384.

S J D Brecker.
The leaking prosthetic valve.
British Journal of Hospital Medicine 1996; **55**:415-418.

S J D Brecker, D G Gibson.
What is the role of pacing in dilated cardiomyopathy ?
European Heart Journal 1996; **17**:819-824.

S J D Brecker, D G Gibson.
Echocardiographic evaluation of ventricular diastolic function: implications for treatment.
Heart 1996; **76**:386-387.

T Treasure, **S J D Brecker**.
The role of echocardiography in the diagnosis of aortic dissection.
The Journal of Heart Valve Disease 1996; **5**:623-629.

S J D Brecker.
The managememt of unstable angina.
Drug and Therapeutics Bulletin 1998; **36**:36-39.

P M Elliott, **S J D Brecker**, W J McKenna.
Diastolic dysfunction in hypertrophic cardiomyopathy.
European Heart Journal 1998; **19**:1125-1127.

S J D Brecker.
Pulmonary venous flow analysis after cardioversion.
European Heart Journal 1999; **20**:323-324.

S J D Brecker, J R Pepper, S J Eykyn.
Aortic root abscess.
Heart 1999; **82**:260-262.

S J D Brecker.
The importance of long axis ventricular function.
Heart 2000; **84**:577-578.
R H Anderson, S Y Ho, **S J Brecker**.
Anatomic basis of cross-sectional echocardiography.
Heart 2001; **85**:716-720.

C Varma, **S J D Brecker**.
Predictors of mortality in acute myocardial infarction.
Lancet 2001; **358**:1473-1474.

D Pellerin, **S J D Brecker**.
A step further in inter-institutional agreement in interpretation of dobutamine stress echocardiograms.
European Heart Journal 2002; **23**:768-771.

N Parchure, **S J D Brecker**.
Management of acute coronary syndromes.
Current Opinion in Critical Care 2002; **8**:230-235.

D Pellerin, **S Brecker**, C Veyrat.
Degenerative mitral valve disease with emphasis on mitral valve prolapse.
Heart 2002; **88**(Suppl IV):iv20-iv28.

R Sharma, **S J Brecker**.
Dobutamine stress echocardiography in diabetes.
The British Journal of Diabetes & Vascular Disease 2005; **5**:42-46.

R Sharma, D Pellerin, **S J D Brecker**.
Cardiovascular disease in end stage renal disease.
Minerva Urologica e Nefrologica 2006;**58**:117-131.

S Firoozi, **S J Brecker.**
Percutaneous device closure for patent foramen ovale.
Controversies and Consensus in Imaging and Intervention 2008;**2**:16-20.

S J D Brecker.
The expert witness: the doctor's perspective
Heart 2009;**95**:763-765.

N Kakouros, **S J D Brecker**.
Device closure for ventricular septal defect after myocardial infarction.
Cardiac Intervention Today 2009;**3(7)**:43-47.

J Butts, D Roy, **S Brecker**.
Transcatheter aortic valve implantation for the treatment of aortic stenosis.

Cardiology News 2010;**13(6)**:6-9.

D Roy, R Sharma, N Bunce, D Ward, **S J Brecker**.
Selecting the optimal closure device in patients with atrial septal defects and patent foramen ovale.
Interventional Cardiology 2012;**4(1)**:85-100

J-C Laborde, **S J D Brecker**, D Roy, M Jahangiri.
Complications at the time of transcatheter aortic valve implantation.
Methodist Debakey Cardiovascular Journal 2012. **8(2)**:38-41.

N Moat, **S Brecker.**
Transfemoral TAVI is superior to SAVR in elderly high-risk patients with symptomatic severe aortic stenosis!
Eur Heart J 2016. **37**:3513-3514.

Peer Review Original Publications

F Nicholson, K L Clark, **S J D Brecker**, S A Smith.
A pharmacological method for measuring the penetration of topical mydriatic drugs in man.
British Journal of Clinical Pharmacology 1982; **14**:468-469.

S J D Brecker, H H Gray, P J Oldershaw.
Coronary artery aneurysms and myocardial infarction : adult sequelae of Kawasaki disease ?
British Heart Journal 1988; **59**:509-512.

S J D Brecker, C D Pusey.
Nocardia asteroides infection of the cauda equina.
Journal of Neurology, Neurosurgery and Psychiatry 1988; **51**:309-311.

S J D Brecker, S J Eykyn.
Q-Fever endocarditis twenty five years on.
Lancet 1989; **ii**:684-685.

S J D Brecker, N J B Trepte.
Myxoedematous Munchausen ?
Lancet 1990; **335**:23.

S J D Brecker.
Early aspirin in myocardial infarction.
Lancet 1990; **335**:923.

S J D Brecker, P Hurley, C D Johnson.
Painless presentation of ruptured oesophagus.
Gullet 1990; **1**:24-27.

S W Davies, **S J Brecker**, R N Stevenson.
Terodiline for treating detrusor instability in elderly people.
British Medical Journal 1991; **302**:1276.

S J D Brecker, H B Xiao, B B Stojnic, M Mbaissouroum, D G Gibson.
Assessment of the peak tricuspid regurgitant velocity from the dynamics of retrograde flow.
International Journal of Cardiology 1992; **34**:267-271.

B B Stojnic, **S J D Brecker**, H B Xiao, S M Helmy, M Mbaissouroum, D G Gibson.
Left ventricular filling characteristics in pulmonary hypertension: a new mode of ventricular interaction.
British Heart Journal 1992; **68**:16-20.

S J D Brecker, H B Xiao, M Mbaissouroum, D G Gibson.
Characteristics of presystolic flow in the superior vena cava: new thoughts on a forgotten sound.
British Heart Journal 1992; **68**:31-37.

B B Stojnic, **S J D Brecker**, H B Xiao, D G Gibson.
Jugular venous 'a' wave in pulmonary hypertension: new insights from a Doppler echocardiographic study.
British Heart Journal 1992; **68**:187-191.

H B Xiao, **S J D Brecker**, D G Gibson.
Effects of abnormal activation on the time course of the left ventricular pressure pulse in dilated cardiomyopathy.
British Heart Journal 1992; **68**:403-407.

S J D Brecker, H B Xiao, J Sparrow, D G Gibson.
Effects of dual-chamber pacing with short atrioventricular delay in dilated cardiomyopathy.
Lancet 1992; **340**:1308-1312.

S J D Brecker, C H Lee, D G Gibson.
Relationship of left ventricular isovolumic relaxation time and incoordination to transmitral Doppler filling patterns.
British Heart Journal 1992; **68**:567-573.

R N Stevenson, R H Roberts, **S J Brecker**, P J Timmins, P D Wilkinson, R Balcon.
Comparison of digital angiograms with conventional cineangiograms for the quantitation of coronary artery stenosis before and after angioplasty.
Coronary Artery Disease 1992; **3**:1183-1188.

S J D Brecker, H B Xiao, M Mbaissouroum, D G Gibson.
Effects of intravenous milrinone on left ventricular function in ischemic and idiopathic dilated cardiomyopathy.
The American Journal of Cardiology 1993; **71**:203-209.

H B Xiao, **S J D Brecker**, D G Gibson.
Differing effects of right ventricular pacing and left bundle branch block on left ventricular function.
British Heart Journal 1993; **69**:166-173.

M Mbaissouroum, C O'Sullivan, **S J Brecker**, H B Xiao, D G Gibson.
Shortened filling time in dilated cardiomyopathy: additional effects on heart rate variability.
British Heart Journal 1993; **69**:327-331.

M Y Henein, H B Xiao, **S J D Brecker**, D G Gibson.
Bernheim 'a' wave: obstructed right ventricular inflow or atrial cross talk ?
British Heart Journal 1993; **69**:409-413.

P Bogaty, **S J Brecker**, S E White, R N Stevenson, H El-Tamimi, R Balcon, A Maseri.
Coronary angiographic findings and risk factor profiles in unheralded acute myocardial infarction compared with uncomplicated chronic stable angina.
Circulation 1993; **87**:1938-1946.

A G Heriot, **S J Brecker**, D J Coltart.
Delay in presentation after myocardial infarction.
Journal of the Royal Society of Medicine 1993; **86**:642-644.

S J D Brecker, R N Stevenson, R Roberts, S Uthayakumar, A D Timmis, R Balcon.
Acute myocardial infarction in patients with normal coronary arteries.
British Medical Journal 1993; **307**:1255-1256.

R H Stables, **S J Brecker**.
Case 2-1994: Tricuspid regurgitation.
New England Journal of Medicine 1994; **330**:1688-1689.

H B Xiao, **S J D Brecker**, D G Gibson.
Relative effects of left ventricular mass and conduction disturbance on activation in patients with pathological left ventricular hypertrophy.
British Heart Journal 1994; **71**:548-553.

S J D Brecker, J S R Gibbs, K M Fox, M H Yacoub, D G Gibson.
Comparison of Doppler derived haemodynamic variables and simultaneous high fidelity pressure measurements in severe pulmonary hypertension.
British Heart Journal 1994; **72**:384-389.

M Petrou, K Wong, M Albertucci, **S J Brecker**, M H Yacoub.
Evaluation of unstented aortic homografts for the treatment of prosthetic aortic valve endocarditis.
Circulation 1994; **90[part 2]**:II-198-II-204.

X Y Jin, J R Pepper, **S J Brecker**, J A Carey, D G Gibson.
Early changes in left ventricular function after aortic valve replacement for isolated aortic stenosis.
American Journal of Cardiology 1994; **74**:1142-1146.

C J Garratt, M J Griffith, G Young, N Curzen, **S Brecker**, A F Rickards, A J Camm.
Value of physical signs in the diagnosis of ventricular tachycardia.
Circulation 1994; **90**:3103-3107.

S J D Brecker, X Y Jin, M H Yacoub.
Anatomical definition of aortic root abscesses by transesophageal echocardiography: Planning a surgical strategy using homograft valves.
Clinical Cardiology 1995; **18**:353-359.

D R Holdright, **S Brecker**, M Shepherd.
Ruptured aneurysm of the aortic sinus of Valsalva - difficulties in establishing the diagnosis.
Cardiology in the Young 1995; **5**:75-77.

S P Karwatowski, **S J D Brecker**, G Z Yang, D N Firmin, M St.John Sutton, S R Underwood.
Mitral valve flow measured with cine MR velocity mapping in patients with ischemic heart disease: comparison with Doppler echocardiography.
Journal of Magnetic Resonance Imaging 1995; **5**:89-92.

S P Karwatowski, **S J D Brecker**, G Z Yang, D N Firmin, M St.John Sutton, S R Underwood.
A comparison of left ventricular myocardial velocity in diastole measured by magnetic resonance and left ventricular filling measured by Doppler echocardiography.
European Heart Journal 1996; **17**:795-802.

T W Koh, **S J D Brecker**, C A Layton.
Successful treatment of *Staphylococcus lugdunensis* endocarditis complicated by multiple emboli: a case report and review of the literature.
International Journal of Cardiology 1996; **55**:193-197.

C G Missouris, D Fluck, **S Brecker**.
Right coronary artery to coronary sinus fistula.
Heart 1999; **81**:270.

K Hnatkova, C Varma, J E P Waktare, **S J Brecker**, M Malik. Computerized system for the assessment of left ventricular function based on ventricular dimensions and intracardiac pressure measurements. In : A Murray, R Arzbaechar (eds). *Computers in Cardiology*. 1999;**26:**387-391.

P M Elliott, **S J Brecker**, W J McKenna.
Left ventricular opacification during selective intracoronary injection of echocardiographic contrast in patients with hypertrophic cardiomyopathy.
Heart 2000; **83**:e7.

C Varma, P O'Callaghan, N G Mahon, K Hnatkova, W McKenna, A J Camm, E Rowland, **S J D Brecker**.
Effect of multisite pacing on ventricular coordination.
Heart 2002;**87**:322-328.

D Pellerin, **S Brecker**, C Veyrat.
Degenerative mitral valve disease with emphasis on mitral valve prolapse.
Heart 2002;**88**(Suppl IV):iv20-iv28.

P A Andrews, **S J D Brecker**.
Premature atherosclerosis associated with diabetic renal disease.
British Journal of Diabetes and Vascular Disease.
D. *The British Journal of Diabetes & Vascular Disease* 2002;2:128-129.

S Firoozi, P M Elliott, S Sharma, A Murday, **S J Brecker**, M S Hamid, B Sachdev, R Thaman, W J McKenna.
Septal myotomy-myectomy and transcoronary septal alcohol ablation in hypertrophic obstructive cardiomyopathy. A comparison of clinical, haemodynamic and exercise outcomes.
European Heart Journal 2002;**23**:1617-1624.

C Varma, P O'Callaghan, E Rowland, N G Mahon, W McKenna, A J Camm, **S J D Brecker**.
Comparison between biventricular pacing and single site pacing in patients with poor ventricular function: A hemodynamic study.
Pacing and Clinical Electrophysiology 2003;**26[Pt. I]**:551-558.

R Motallebzadeh R, D Batas, O Valencia, V Chandrasekaran, J Smith, **S Brecker**, M Jahangiri.
The role of coronary angiography in acute type A aortic dissection.
European Journal of Cardiothorac Surgery 2004;**25**:231-235.

D A Sarkar, E E J Smith, **S J Brecker.**
Giant coronary aneurysms.
Lancet 2004;**363**:37.

A Karagounis, O Valencia, V Chandrasekaran, J Smith, **S Brecker**, M Jahangiri.
Management of patients undergoing coronary artery bypass graft surgery with mild to moderate aortic stenosis.
The Journal of Heart Valve Disease 2004;**13**:369-373.

I F Purcell, **S J Brecker**, D Ward,
Closure of defects of the atrial septum in adults using the Amplatzer Device: 100 consecutive patients in a single center.
Clinical Cardiology 2004;**27**:509-513.

R Sharma, D Pellerin, D C Gaze, J S Shah, C P Streather, P O Collinson, **S J Brecker.**
Dobutamine stress echocardiography and cardiac troponin T for the detection of significant coronary artery disease and predicting outcome in renal transplant candidiates.
European Journal of Echocardiography 2005;**6**:327-335.

R Sharma, D Pellerin, D C Gaze, H Gregson, C P Streather, P O Collinson, **S J D Brecker.**
Dobutamine stress echocardiography and the resting but not exercise electrocardiography predict severe coronary artery disease in renal transplant candidates.
Nephrology Dialysis Transplantation 2005;**20**:2207-2214.

S J D Brecker, K Mandal, T Harrison, G Griffin, A Varghese, D J Pennell, J Lester, M Jahangiri.
Hydatid disease of the heart.
The Annals of Royal College of Surgeons of England 2005; 87.
http://dx.doi.org/ > 10.1308/147870805X28064.

G Y Shin, R J Manuel, S Ghori, **S Brecker**, A S Breathnach
Molecular technique identifies the pathogen responsible for culture negative infective endocarditis
Heart 2005;**91**:e47.

K Mandal, **S Brecker**, B Madden, P Quniton, M Jahangiri.
Drug allergy mimicking recurrent endocarditis - a cautionary tale
British Journal of Intensive Care 2005;**15(3)**:107-108.

R Sharma, D Pellerin , D C Gaze, R L Mehta, H Gregson, C P Streather, P O Collinson, **S J Brecker**.
Mitral peak Doppler E-wave to peak mitral annulus velocity ratio is an accurate estimate of left ventricular filling pressure and predicts mortality in end-stage renal disease.
Journal of the American Society of Echocardiography 2006;**19**:266-273.

K Mandal, A R Afzal, **S J D Brecker**, J Poloniecki, Q Xu, M Jahangiri.
Association of serum soluble heat shock protein 60 with toll-like receptor 4 polymorphism and severity of coronary artery disease.
Heart 2006;**92**:683-685.

R Sharma, D C Gaze, D Pellerin, R L Mehta, H Gregson, C P Streather, P O Collinson, **S J Brecker**.
Cardiac structural and functional abnormalities in end stage renal disease patients with elevated cardiac troponin T.
Heart 2006;**92(6)**:804-809.

R Sharma, D C Gaze, D Pellerin, R L Mehta, H Gregson, C P Streather, P O Collinson, **S J D Brecker**
Raised plasma N-terminal pro-B-type natriuretic peptide concentrations predict mortality and cardiac disease in end-stage renal disease.
Heart 2006;**92**:1518-1519.

K Teoh, E Wilton, **S Brecker**, M Jahangiri.
Simultaneous removal of an Amplatzer device from and atrial septal defect and the descending aorta.
The Journal of Thoracic and Cardiovascular Surgery 2006;**131**:909-910.

R Sharma, D Pellerin, D C Gaze, R L Mehta, H Gregson, C P Streather, P O Collinson, **S J D Brecker**.
Dynamic left ventricular obstruction: A potential cause of angina in end stage renal disease.
International Journal of Cardiology 2006;**112**:295-301.

R Sharma, D C Gaze, D Pellerin, R L Mehta, H Gregson, C P Streather, P O Collinson, **S J D Brecker**.
Ischemia-modified albumin predicts mortality in ESRD.
American Journal of Kidney Diseases 2006:**47**:493-502.

R Sharma, D C Gaze, D Pellerin, R L Mehta, H Gregson, C P Streather, P O Collinson, **S J D Brecker**.
Evaluation of ischaemia-modified albumin as a marker of myocardial ischaemia in end-stage renal disease.
Clinical Science 2007;**113**:25-32.

F Prefumo, R Sharma, **S J D Brecker**, D C Gaze, P O Collinson, B Thilaganathan.
Maternal cardiac function in early pregnancies with high uterine artery resistance.
Ultrasound in Obstetrics & Gynecology 2007;**29**:58-64.

R Sharma, E Chemla, M Tome, R L Mehta, H Gregson, **S J D Brecker**, R Chang, D Pellerin
Echocardiography-based score to predict outcome after renal transplantation.
Heart 2007;**93**:464-469.

R Sharma, D Pellerin, D C Gaze, R L Mehta, H Gregson, C P Streather, P O Collinson, **S J D Brecker**.
Mitral annular calcification predicts mortality and coronary artery disease in end stage renal failure.
Atherosclerosis 2007;**191**:348-354.

E Merli , G R Sutherland, B Bijnens , A Fischer , M Chaparro, T Karu, S Sutcliffe, A Marciniak, A Baltabaeva, N Bunce, **S Brecker**.
Usefulness of changes in left ventricular wall thickness to predict full or partial pressure reperfusion in ST-elevation acute myocardial infarction.
American Journal of Cardiology 2008;**102(3)**:249-56.

R Sharma, D Pellerin, **S J D Brecker**.
The detection of myocardial ischaemia in end-stage renal disease.
Current Opinion in Investigational Drugs 2007;**8(3)**:232-236.

K Le Doaré, S Ameli-Renani, D Banerjee, **S J D Brecker**, J B Eastwood.
Acute renal failure and multiple sites of ischemia what is the unifying diagnosis?
Nephrology Dialysis Transplantation Plus 2008;1-2.

R Sharma, R L Mehta, **S J D Brecker**, D C Gaze, H Gregson, C P Streather, P O Collinson, D Pellerin.
The diagnostic and prognostic value of tissue Doppler imaging during dobutamine stress echocardiography in end-stage renal disease.
Coronary Artery Disease 2009;**20**:230-237.

M Chaparro-Muñoz, A Recio-Mayoral, J C Kaski, **S Brecker**, G R Sutherland.
Myocardial stunning identified by using strain/strain rate imaging during dobutamine stress echocardiography in a rare late recurrence of Tako-Tsubo syndrome.
International Journal of Cardiology 2010;**145**:e9-e12.

P S Dhillon, N Kakouros, **S J D Brecker**.
Transcatheter aortic valve replacement for symptomatic severe aortic regurgitation.
Heart 2010;**96**:810. doi: 10.1136/hrt.2009.190421

H Baumgartner, P Bonhoeffer, N M S De Groot, F de Haan, J E Deanfield, N Galie, M A Gazoulis, C Gohlke-Baerwolf, H Kaemmerer, P Kilner, F Meijboom, B J M Mulder, E Oechslin, J M Oliver, A Serraf, A Szatmari, E Thaulow, P R Vouhe, E Walma, A Vahanian, A Auricchio, J Bax, C Ceconi, V Dean, G Filippatos, C Funck-Brentano, R Hobbs, P Kearney, T McDonagh, B A Popescu, Z Reiner, U Sechtem, P A Sirnes, M Tendera, P Vardas, P Widimsky, T McDonagh, L Swan, F Andreotti, M Beghetti, M Borggrefe, A Bozio, **S Brecker**,W Budts, J Hess, R Hirsch, G Jondeau, J Kokkonen, M Kozelj, S Kucukoglu, M Laan, C Lionis, I Metreveli, P Moons, P G. Pieper, V Pilossoff, J Popelova, S Price, J Roos-Hesselink, M Sousa Uva, P Tornos, P T Trindade, H Ukkonen, H Walker, G D Webb, J Westby.
ESC Guidelines for the management of grown-up congenital heart disease (new version 2010): The Task Force on the Management of Grown-up Congenital Heart Disease of the European Society of Cardiology.
European Heart Journal 2010;**31**:2915-2957.

A M Moynagh, D J A Scott, A Baumbach, A Khavandi, **S J Brecker**, J-C Laborde, S Brown, S Chowdhary, D Saravanan, P A Crean, S Teehan, D Hildick-Smith, U Trivedi, S S Khogali, M S Bhabra, D H Roberts, K P Morgan, D J Blackman, UK CoreValve Collaborative.
CoreValve transcatheter aortic valve implantation via the subclavian artery. Comparison with the transfemoral approach.
Journal of the American College of Cardiology 2011;57:634-635.
M Jahangiri, J-C Laborde, D Roy, F Williams, N Abdulkareem, **S Brecker.**
Outcome of patients with aortic stenosis referred to a multidisciplinary meeting for transcatheter valve.
Annals of Thoracic Surgery 2011;**91**:411-415.

D Himbert, D Roy, **S Brecker**, E Brochet, J-P Depoix, C Radu, J-C Laborde, A Vahanian.
Tools & Techniques: Transcatheter aortic valve implantation: transfemoral approach.
EuroIntervention 2011;**6**:784-785

N E Moat, P Ludman, M A de Belder, B Bridgwater, A D Cunningham, C P Young, M Thomas, J Kovac, T Spyt, P A MacCarthy, O Wendler, D Hildick-Smith, S W Davies, U Trivedi, D J Blackman, R D Levy, **S J D Brecker**, A Baumbach, T Daniel, H Gray, M J Mullen.
Long-term outcomes following Transcatheter Aortic Valve Implantation in high risk patients with severe aortic stenosis. The U.K. TAVI (United Kingdom Transcatheter Aortic Valve Implantation) Registry.
Journal of the American College of Cardiology 2011;**58**:2130-2138.

D Hildick-Smith, S Redwood, M Mullen, M Thomas, J Kovac, **S Brecker**, U Trivedi, C Young, N Hutchinson, P MacCarthy, B Prendergast, M de Belder, M Mongahan, D Blackman, A Baumbach, G Manoharan, N Moat, UK TAVI Collaborative.
Complications of transcatheter aortic valve implantation: avoidance and management.
EuroIntervention 2011;**7**:621-628.

M Z Khawaja, R Rajani, A Cook, A Khavandi, A Moynagh, S Chowdhary, M S Spence, S Brown, S Q Khan, N Walker, U Trivedi, N Hutchinson, A J De Belder, N Moat, D J Blackman, R D Levy, G Manoharan, D Roberts, S S Khogali, P Crean, **S J Brecker**, A Baumbach,

M Mullen, J-C Laborde, D Hildick-Smith D.
Permanent pacemaker insertion after CoreValve transcatheter aortic valve implantation: incidence and contributing factors (the UK CoreValve Collaborative).
Circulation 2011;**123**(9):951-960.

D Dvir, J Webb, **S Brecker**, S Bleiziffer, D Hildick-Smith, A Columbo, F Descoutures, C Hengstenberg, N E Moat, R Bekeredjian, M Napodano, L Testa, T Lefevre, V Guetta, H Nissen, J-M Hernández, D Roy, R C Teles, A Segev, N Dumonteil, C Fiorina, M Gotzmann, D Tchetche, M Abdel-Wahab, F De Marco, A Baumbach, J-C Laborde, R Kornowski.
Transcatheter Aortic Valve Replacement for Degenerative Bioprosthetic Surgical Valves: Results from the Global Valve-inValve Registry.
Circulation 2012;**126**:2335-2344.

A Alassar, D Roy, N Abdulkareem, O Valencia, **S Brecker**, M Jahangiri.
Acute kidney injury after transcatheter aortic valve implantation. Incidence, risk factors, and prognostic effects.
Innovations 2012;**7**:389-393.

G Soppa, D Roy, **S Brecker**, M Jahangiri.
Early experience with the transaortic approach for transcatheter aortic valve implantation.
The Journal of Thoracic and Cardiovascular Surgery 2012;**143**:1225-1227.

S A Musa, **S J Brecker**, T M Rahman, J Y Kang.
Upper gastrointestinal haemorrhage in the acute cardiac care setting: antiplatelets and endoscopy.
Scottish Medical Journal 2012;**57**:88-91.

S A Qureshi, D Hildick-Smith, J de Giovanni, P Clift, G Stuart, R Henderson, **S Brecker**, D Hackett, S Ray, M de Belder.
Adult congenital heart disease interventions: recommendations from a Joint Working Group of the British Congenital Cardiac Association (BCCA), British Cardiovascular Intervention Society (BCIS) and the British Cardiovascular Society,
Cardiology in the Young 2013;**23**:68-74.

D A Roy, J-C Laborde, R Sharma, M Jahangiri, **S J D Brecker.**
First-in-man assessment of a dedicated guidewire for transcatheter aortic valve implantation.
EuroIntervention 2013;**8**:1019-1025.

M S Rahman, D Roy, **S J Brecker**.
Transcatheter aortic valve implantation in a patient with previous Starr-Edwards mitral valve prosthesis.
Heart 2013;**99**:217-8.

M Z Khawaja, M Sohal, H Valli, R Dworakowski, S J Pettet, D Roy, J Newton, H Schneider, G Manoharan, S Doshi, D Muir, D Roberts, J Nolan, M Gunning, C Densem, M S Spence, S Chowdhary, V S Mahadevan, **S J Brecker**, P MacCarthy, M Mullen, R H Stables, B D Prendergast, A de Belder, M Thomas, S Redwood, D Hildick-Smith.
Standalone balloon aortic valvuloplasty: Indications and outcomes from the UK in the transcatheter valve era.
Catheterization and Cardiovascular Interventions 2013;**81**:366-373.

D A Roy, U Schaefer, V Guetta, D Hildick-Smith, H Möllmann, N Dumonteil, T Modine, J Bosmans, A S Petronio, N Moat, A Linke, C Moris, D Champagnac, R Parma, A Ochala, D Medvedofsky, T Patterson, F Woitek, M Jahangiri, J-C Laborde, **S J Brecker.**
Transcatheter aortic valve implantation for pure severe native aortic valve regurgitation.
Journal of the American College of Cardiology 2013; **61**(15):1577-1584.

D A Roy, P Bhamra-Ariza, A Asherson, R Sharma, M Jahangiri, **S Brecker**.
First-in-man use of aortic valve ultrasound for assessment of aortic valve anatomy pre- and post-transcatheter aortic valve implantation.
Journal of the American College of Cardiology Cardiovascular Interventions 2013; **6**(6):634-635.

S G Jones, N R Abdulkareem, F Williams, **S Brecker**, M Jahangiri.
Outcomes of transcatheter aortic valve implantation compared to surgical aortic valve replacement following previous surgery.
The Journal of Heart Valve Disease 2013;**22**:204-208.

D Roy, R Sharma, **S J D Brecker**.
Native aortic valve regurgitation: transcatheter therapeutic options.
EuroIntervention 2013; **9**:S55-S62.

A Alassar, D Roy, O Valencia, **S Brecker**, M Jahangiri.
Survival, predictive factors, and causes of mortality following transcatheter aortic valve implantation.
Innovations 2013;**8**:359-363.

A Linke, P Wenaweser, U Gerckens, C Tamburino, J Bosmans, S Bleiziffer, D Blackman, U Schäfer, R Müller, H Sievert, L Søndergaard, S Klugmann, R Hoffmann, D Tchétche, A Colombo, V M Legrand, F Bedogni, P lePrince, G Schuler, D Mazzitelli, C Eftychiou, C Frerker, P Boekstegers, S Windecker, F-W Mohr, F Woitek, R Lange, R Bauernschmitt, **S Brecker**.
Treatment of aortic stenosis with a self-expanding transcatheter valve: the International Multi-centre ADVANCE Study.
European Heart Journal 2014;**35**:2672-2684.

J T Laban, F H Rasul, **S J D Brecker**, H T Marsh, A T Martin.
Patent foramen ovale closure prior to surgery in the sitting position.
British Journal of Neurosurgery 2014;**28(3)**:421-422.

D Dvir, J G Webb, S Bleiziffer, M Pasic, R Waksman, S Kodali, M Barbanti, A Latib, U Schaefer, J Rodés-Cabeau, H Treede, N Piazza, D Hildick-Smith, D Himbert, T Walther, C Hengstenberg, H Nissen, R Bekeredijan, P Presbitero, E Ferrari, A Segev, A de Weger, S Windecker, N E Moat, M Napodano, M Wilbring, A G Cerillo, **S Brecker**, D Tchetche, T Lefèvre, F De Marco, C Fiorina, A S Petronio, R C Teles, L Testa, J-C Laborde, M B Leon, R Kornowski. Valve-in-Valve International Data Registry Investigators.
Transcatheter aortic valve implantation in failed bioprosthetic surgical valves.
Journal of the American Medical Association 2014;**312(2)**:162-170.

S Brecker, S Mealing, A Padhiar, J Eaton, M Sculpher, R Busca, J Bosmans, U J Gerkens, P Wenaweser, C Tamburino, S Bleiziffer, N Piazza, N Moat, A Linke.
Cost-utility of transcatheter aortic valve implantation for inoperable patients with severe aortic stenosis treated by medical management: a UK cost-utility analysis based on patient-level data from the ADVANCE study.
Open Heart 2014;**1**:e000155. doi:10.1136/openhrt-2014-000155.

M Zakkar, A Alassar, M Lopez-Perez, D Roy, **S Brecker**, R Sharma, M Jahangiri.
Left ventricular remodelling after transcatheter aortic valve implantation. One-year follow up study.
Innovations 2015;**10(1)**:44-47.

M S Rahman, R Sharma, **S J D Brecker**.
Transcatheter aortic valve implantation in patients with pre-existing chronic renal failure.
International Journal Of Cardiology Heart & Vasculature 2015;**8**:9-18.

J Bosmans, S Bleiziffer, U Gerckens, P Wenaweser, **S Brecker**, C Tamburino, A Linke.
The incidence and predictors of early- and mid-term clinically relevant neurological events after transcatheter aortic valve replacement in real-world patients.
Journal of the American College of Cardiology 2015;**66**:209-217.

G Manoharan, A S Walton, **S J Brecker**, S Pasupati, D J Blackman, H Qiao, I T Meredith.
Treatment of symptomatic severe aortic stenosis with a novel resheathable supra-annular self-expanding transcatheter aortic valve system.
Journal of the American College of Cardiology Cardiovascular Interventions 2015; **8**:1359-1367.

H Felice, S Chandran, P Bhamra-Ariza, **S Brecker**.
Transcatheter closure of multiple defects of the atrial septum: technique and follow-up.
International Journal of Clinical Medicine 2015;**6**:591-596.

S S Kalra, S Firoozi, J-C Laborde, **S J Brecker**.
Transcatheter aortic valve replacement in a patient with a single coronary artery: use of a recapturable system.
Journal of Interventional Cardiology 2016; **29**:124.

R Rampat, M Z Khawaja, J Byrne, P MacCarthy, D J Blackman, A Krishnamurthy, A Gunarathne, J Kovac, A Banning, R Kharbanda, S Firoozi, **S Brecker**, S Redwood, V Bapat, M Mullen, S Aggarwal, G Manoharan, M S Spence, S Khogali, M Dooley, J Cockburn, A de Belder, U Trivedi, D Hildick-Smith.
Transcatheter aortic valve replacement using the repositionable LOTUS valve.
Journal of the American College of Cardiology Cardiovascular Interventions 2016; **9**:367-372.

M Barbanti, M Schiltgen, S Verdoliva, J Bosmans, S Bleiziffer, U Gerckens, P Wenaweser, **S Brecker**, S Gulino, C Tamborino, A Linke,
Three-year outcomes of transcatheter aortic valve implantation in patients with varying levels of surgical risk (from the CoreValve ADVANCE Study).
American Journal of Cardiology 2016;**117**:820-827.

S Brecker, S Bleiziffer, J Bosmans, U Gerckens, C Tamburino, P Wenaweser, A Linke.
Impact of anesthesia type on outcomes of transcatheter aortic valve implantation (from the multicenter ADVANCE Study).
American Journal of Cardiology 2016; **117**:1332-1338.

M Simonato, J Webb, R Kornowski, A Vahanian, C Frerker, H Nissen, S Bleiziffer, A Duncan, J Rodés-Cabau, GF Attizzani, E Horlick, A Latib, R Bekeredjian, M Barbanti, T Lefevre, A Cerillo, JM Hernández, G Bruschi, K Spargias, A Iadanza, **S Brecker**, JH Palma, A Finkelstein, M Abdel-Wahab, P Lemos, AS Petronio, D Champagnac, J-M Sinning, S Salizzoni, M Napodano, C Fiorina, A Marzocchi, M Leon, D Dvir.
2004 Transcatheter Replacement of Failed Bioprosthetic Valves
E. Large Multicenter Assessment of the Effect of Implantation Depth on Hemodynamics After Aortic Valve-in-Valve
Circulation Cardiovascular Intervention 2016; **9**: e003651 doi: 10.1161/ CIRCINTERVENTIONS.115.003651

S S Kalra, S Firoozi, J Yeh, D J Blackman, S Rashid, S Davies, N Moat, M Dalby, T Kabir, S S Khogali, R A ANderson, P H Groves, D Mylotte, D Hildick-Smith, R Rampat, J Kovac, A Gunarathne, J-C Laborde, **S J Brecker**.
Initial Experience of a Second-Generation Sef-Expanding Transcatheter Aortic Valve.
The UK & Ireland Evolut R Implanters' Registry
Journal of the American College of Cardiology Cardiovascular Interventions 2017;**10**:276-282.

R Rampat, M Z Khawaja, R Hilling-Smith, J Byrne, P MacCarthy, D J Blackman, A Krishnamurthy, A Gunarathne, J Kovac, A Banning, R Kharbanda, S Firoozi, **S Brecker**, S Redwood, V Bapat, M Mullen, S Aggarwal, G Manoharan, M S Spence, S Khogali, M Dooley, J Cockburn, A de Belder, U Trivedi, D Hildick-Smith.
Conduction abnormalities and permanent pacemaker implantation after transcatheter aortic valve replacement using the repositionable LOTUS device. The United Kingdom experience.
Journal of the American College of Cardiology Cardiovascular Interventions 2017;**10**:1247-1253.

U Gerckens, C Tamburino, S Bleiziffer, J Bosmans, P Wenaweser, **S Brecker,** J Guo, A Linke.
Final 5-year clinical and echocardiographic results for treatment of severe aortic stenosis with a self-expanding bioprosthesis from the ADVANCE Study.
European Heart Journal 2017;**38**:2729-2738.

S Bleiziffer, J Bosmans, **S Brecker**, U Gerckens, P Wenaweser, C Tamburino, A Linke.
Insights on Mid-term TAVR Performance: 3-year Clinical and Echocardiographic Results from the CoreValve ADVANCE Study.
Clinical Research in Cardiology 2017; **106(10)**:784-795.

L van Gils, J Wöhrle, D Hildick-Smith, S Bleiziffer, D J Blackman, M Abdel-Wahab, U Gerckens, **S Brecker**, V Bapat, T Modine, O I Soliman, A Nersesov, D Allocco, V Falk, N M Van Mieghem.
Importance of contrast aortography with Lotus transcatheter aortic valve replacement. A post hoc analysys from the RESPOND post-market study.
Journal of the American College of Cardiology Cardiovascular Interventions 2018;**11**:119-128.

P Pibarot, M Simonato, M Barbanti, A Linke, R Kornowski, T Rudolph, M Spence, N Moat, G Aldea, M Mennuni, A Iadanza, H Amrane, D Gaia, W-K Kim, M Napodano, H Baumbach, A Finkelstein, J Koboyashi, **S Brecker**, C Don, A Cerillo, A Unbehaun, D Attias, M Nejjari, N Jones, C Fiorina, D Tchetche, R Philippart, K Spargias, J-M Hernandez, A Latib, D Dvir.
Impact of pre-existing prosthesis-patient mismatch on survival following aortic valve-in-valve procedures.
Journal of the American College of Cardiology Cardiovascular Interventions 2018;**11**:133-141.

C Dowling, S Firoozi, **S Brecker**.
Percutaneous coronary intervention for stable angina in ORBITA.
The Lancet 2018;**392**:28.

C Dowling, S Firoozi, R Sharma, **S J Brecker**.
A “fluttering” diastolic murmur.
European Heart Journal – Cardiovascular Imaging 2018;**19(11)**:1252.

C Dowling, S Firoozi, N Doyle, D J Blackman, C J Malkin, M S Cunnington, S Saraf, M H Buch, R Levy, S Chowdhary, M S Spence, G Manoharan, C G Owens, P F Brennan, D Roberts, R More, A Wiper, H K Abdelaziz, D Mylotte, A Neylon, N Martin, F Mercanti, S Dorman, V Panoulas, M Dalby, M N Kashyap, T Kabir, J Kovac, K Kontoprias, I S Malik, M W Ghada, S Sen, N Ruparelia, O M Demir, A Frame, N G Uren, R Anderson, T Rajathurai, L Tapp, L Deegan, E Grech, I Hall, M Neville, R Rampat, D Hildick-Smith, M Mullen, S Kennon, P Chandrala, S Doshi, **S J Brecker**.
Initial experience of a large, self-expanding, and fully recapturable transcatheter aortic valve: The UK & Ireland Implanters’ registry
Catheterization & Cardiovascular Interventions 2019;**93**:751-757.

D J Blackman, S Saraf, P A MacCarthy, A Myat, S G Anderson, C J Malkin, M S Cunnington, K Somers, P Brennan, G Manoharan, J Parker, O Aldalati, **S J Brecker**, C Dowling, S P Hoole, S Dorman, M Mullen, S Kennon, M Jerrum, P Chandrala, D H Roberts, J Tay, S N Doshi, P F Ludman, T A Fairbairn, J Crowe, R D Levy, A P Banning, N Ruparelia, M S Spence, D Hildick-Smith.
Long-term durability of transcatheter aortic valve prostheses.
Journal of the American College of Cardiology 2019;**73**:537-545.

C Dowling, A M Bavo, N El Faquir, P Mortier, P de Jaegere, O De Backer, L Sondergaard, P Ruile, D Mylotte, H McConkey, R Rajani, J-C Laborde, **S J Brecker.**
Patient-specific computer simulation of transcatheter aortic valve replacement in bicuspid aortic valve morphology.
Circulation Cardiovascular Imaging 2019;**12(10)**:e009178.

C Dowling, S Firoozi, **S J Brecker**.
First-in-human experience with patient-specific computer simulation of TAVR in bicuspid aortic valve morphology.
Journal of the American College of Cardiology Cardiovascular Interventions 2020;**13**:184-192.

C Dowling, S R K Seshasi, S Firoozi, **S J Brecker**.
Transcatheter aortic valve replacement versus surgery for symptomatic severe aortic stenosis: A reconstructed individual patient data meta-analysis.
Catheterization & Cardiovascular Interventions 2020;**96**:158-166.

A Myat, O Papachrisofi, U Trivedi, V Bapat, C Young, A de Belder, J Cockburn, A Baumbach, A P Banning, D J Blackman, P MacCarthy, M Mullen, D F Muir, J Nolan, A Zaman, M de Belder, I Cox, J Kovak, **S Brecker**, M Turner, S Khogali, I Malik, S Redwood, B Prendergast, P Ludman, L Sharples, D Hildick-Smith.
Transcatheter aortic valve implantation via surgical subclavian versus direct aortic access: A United Kingdom analysis.
International Journal of Cardiology 2020;**308**:67-72.

C Dowling, S Firoozi, V Panoulas, M Dalby, M N Kashyap, T Kabir, K Kalogeras, M H Buch, R Levy, S Chowdhary, S Saraf, D Roberts, R More, A Wiper, H K Abdelaziz, A Neylon, D Mylotte, A D Pisaniello, D G W Fraser, R Anderson, M S Cunnington, C J Malkin, D J Blackman, P F Brennan, C G Owens, G Manoharan, M S Spence, **S J Brecker**.
Initial experience of a self-expanding transcatheter aortic valve with an outer pericardial wrap: The United Kingdom and Ireland Implanters' registry
Catheterization & Cardiovascular Interventions 2020;**95**:1340-1346.

S Bleiziffer, M Simonato, J G Webb, J Rodes-Cabau, P Pibarot, R Kornowski, S Windecker, M Erlebach, A Duncan, M Seiffert, A Unbehaun, C Frerker, L Conzelmann, H Wijeysundera, W-K Kim, M Montorfano, A Latib, D Tchetche, A Allali, M Abdel-Wahab, K Orvin, S Stortecky, H Nissen, A Holzamer, M Urena, L Testa, M Agrifoglio, B Whisenant, J Sathananthan, M Napodano, A Landi, C Fiorina, A Zittermann, V Veulemans, J-M Sinning, F Saia, **S Brecker**, P Presbitero, O De Backer, L Søndergaard, G Bruschi, L N Franco, A S Petronio, M Barbanti,

A Cerillo, K Spargias, J Schofer, M Cohen, A Muñoz-Garcia, A Finkelstein, M Adam, V Serra, R C Teles, D Champagnac, A Iadanza, P Chodor, H Eggebrecht, R Welsh, A Caixeta, S Salizzoni, Antonio Dager, V Auffret, A Cheema, T Ubben, M Ancona, T Rudolph, J Gummert, E Tseng, S Noble, M Bunc, D Roberts, M Kass, A Gupta, M B Leon, D Dvir.
Long-term outcomes after transcatheter aortic valve implantation in failed bioprosthetic valves.
European Heart Journal 2020;**41**:2731-2742.

J Michel, C Pellegrini, T Rheude, M von Scheid, T Trenkwalder, Y Elhmidi, N P Mayr, **S Brecker**, A M Kasel, A Kastrati, H Schunkert, O Husser, S Bleiziffer, C Hengtenberg.
The clinical impact of psoas muscle cross-sectional area on medium-term mortality after transcatheter aortic valve implantation.
Heart, Lung and Circulation 2020;**29**:904-913.

G Manoharan, E Grube, N M Van Mieghem, **S Brecker**, C Fiorina, R Kornowski, H Danenberg, H Ruge, H Thiele, P Lancelllotti, L Søndergaard, C Tamburino, J K Oh, Y Fan, S Windecker.
Thirty day clinical outcomes of the Evolut PRO self-expanding transcatheter aortic valve: the international FORWARD PRO study.
EuroIntervention 2020;**16**:850-857.

A Myat, L Buckner, F Mouy, J Cockburn, A Baumbach, A P Banning, D J Blackman, N Curzen, P MacCarthy, M Mullen, M de Belder, I Cox, J Kovac, **S Brecker**, M Turner, S Khogali, I S Malik, O Alsanjari, S Redwood, B Prendergast, U Trivedi, D Robinson, P Ludman, A de Belder, D Hildick-Smith.
In-hospital stroke after transcatheter aortic valve implantation: a United Kingdom observational cohort analysis.
Catheterization & Cardiovascular Interventions; 2021;**97**:E552–E559.

A Myat, F Mouy, L Buckner, J Cockburn, A Baumbach, P MacCarthy, AP Banning, N Curzen, R Hilling-Smith, DJ Blackman, M Mullen, M de Belder, I Cox, J Kovac, G Manoharan, A Zaman, D Muir, D Smith, **S Brecker**, M Turner, S Khogali, I S Malik, O Alsanjari, F D'Auria, S Redwood, B Prendergast, U Trivedi, D Robinson, P Ludman, A de Belder, David Hildick-Smith.
Survival relative to pacemaker status after transcatheter aortic valve implantation
Catheterization & Cardiovascular Interventions 2021;**98**:E444–E452.

C Dowling, R Gooley, I McCormick , S Firoozi, **S J Brecker**.
Patient-specific Computer Simulation: An Emerging Technology for Guiding the Transcatheter Treatment of Patients with Bicuspid Aortic Valve.
Interventional Cardiology Review 2021;16:e26. https://doi.org/10.15420/icr.2021.09

C Dowling, R Gooley, L McCormick, **S J Brecker**, S Firoozi, V N Bapat, SK Kodali, OK Khalique, J Brouwer, MJ Swaans.
Patient-Specific Computer Simulation to Optimize Transcatheter Heart Valve Sizing and Positioning in Bicuspid Aortic Valve
Structural Heart 2021;**5(6)**:621-630.

C Dowling, R Gooley, I McCormick , S Firoozi, **S J Brecker**.
Patient-specific computer simulation to predict long-term outcomes after transcatheter aortic valve replacement.
Journal of Cardiovascular Computed Tomography 2022;16(3):254-261.

C Dowling, R Gooley, L McCormick, H N Rashid, J Dargan, F Khan, S Firoozi, **S J Brecker**.
Patient-specific computer simulation to predict conduction disturbance with current-generation self-expanding transcatheter heart valves.
Structural Heart 2022;6(3):1-10.

N Ali, D Hildick-Smith, J Parker, C J Malkin, M S Cunnington, S Gurung, J Mailey, P A MacCarthy, A Bharucha, **S J Brecker**, S P Hoole, S Dorman, S N Doshi, A Wiper, M H Buch, A P Banning, M S Spence, D J Blackman.
Long-term durability of self-expanding and balloon-expandable transcatheter aortic valve prostheses: UK TAVI registry.
Catheter Cardiovascular Interventions 2023;**101**:932-942.

C Dowling, R Gooley, L McCormick, R P Sharma, A C Yeung, W F Fearon, J Dargan, F Khan, S Firoozi, **S J Brecker**.
Ongoing experience with patient-specific computer simulation of transcatheter aortic valve replacement in bicuspid aortic valve.
Cardiovascular Revascularization Medicine 2023;**51**:31-37.

J Dargan, A Kenawi, F Khan, S Firoozi, **S Brecker**.
Patient-Specific Computer Modeling to Guide Redo Transcatheter Aortic Valve Replacement.
Journal of the American College of Cardiology Cardiovascular Interventions 2023;**16**.
https://doi.org/10.1016/j.jcin.2023.07.034

Original Abstracts

P Bogaty, **S J Brecker**, S E White, H El-Tamimi, R N Stevenson, R Balcon,
A Maseri.
Different coronary angiographic findings in unheralded acute myocardial infarction and uncomplicated chronic stable angina.
Presented at the 40th Annual Scientific Sessions of the American College of Cardiology, Atlanta, USA, March 1991. *Journal of the American College of Cardiology* 1991; **17**(suppl A):254A.

P Bogaty, **S J Brecker**, S E White, H El-Tamimi, R N Stevenson, R Balcon,
A Maseri.
Extent of coronary atherosclerosis is different in unheralded acute myocardial infarction compared with uncomplicated chronic stable angina.
Presented at the Annual Meeting of the British Cardiac Society, Glasgow, Scotland, May 1991. *British Heart Journal* 1991; **66**:57.

H B Xiao, **S J D Brecker**, D G Gibson.
Abnormal activation limits left ventricular filling time in dilated cardiomyopathy.
Presented at the XIIIth Congress of the European Society of Cardiology, Amsterdam, The Netherlands, August 1991. *European Heart Journal* 1991; **12**(Abstr. Suppl.):58.

R Stevenson, J Timmins, R Roberts, **S Brecker**, R Balcon.
Comparison of digital subtraction angiography with cineangiography in the quantification of lesion severity before and after angioplasty.
Presented at the XIIIth Congress of the European Society of Cardiology, Amsterdam, The Netherlands, August 1991. *European Heart Journal* 1991; **12**(Abstr. Suppl.):327.

S J D Brecker, C H Lee, H B Xiao, D G Gibson.
The Doppler filling pattern is determined by isovolumic relaxation time and incoordination in left ventricular disease.
Presented at the 9th European Conference of International Society of Noninvasive Cardiology, Bratislava, Czechoslovakia, October 1991. *Neinvazívna kardiológia* 1991; Suppl.:A-14. & 1992; **1**:136-138.

S M Helmy, H B Xiao, **S J Brecker**, D G Gibson.
Nature of early diastolic intracavity flow in the left ventricle.
Presented at the 9th European Conference of International Society of Noninvasive Cardiology, Bratislava, Czechoslovakia, October 1991. *Neinvazívna kardiológia* 1991; Suppl.:A-14.

H B Xiao, **S J D Brecker**, D G Gibson.
Abnormal activation limits left ventricular filling time in dilated cardiomyopathy.
Presented at the 9th European Conference of International Society of Noninvasive Cardiology, Bratislava, Czechoslovakia, October 1991. *Neinvazívna kardiológia* 1991; Suppl.:A-6.

S J Brecker, R N Stevenson, R Roberts, A D Timmis, R Balcon.
Clinical characteristics and coagulation factor analysis of acute myocardial infarction with normal coronary arteries.
Presented at the 64th Scientific Sessions of the American Heart Association, Anaheim, USA, November 1991. *Circulation* 1991; **84**(suppl II):II-600.

S J Brecker, S Heriot, D J Coltart.
Time delays in presentation of acute myocardial infarction : influencing factors.
Presented at the 64th Scientific Sessions of the American Heart Association, Anaheim, USA, November 1991. *Circulation* 1991; **84**(suppl II):II-604.

S M Helmy, H B Xiao, **S J Brecker**, D G Gibson.
Nature of early diastolic intracavity flow in left ventricular disease.
Presented at the 64th Scientific Sessions of the American Heart Association, Anaheim, USA, November 1991. *Circulation* 1991; **84**(suppl II):II-369.

S J D Brecker, H B Xiao, D G Gibson.
Assessment of peak tricuspid regurgitant velocity and right ventricular relaxation from the dynamics of retrograde flow.
Presented at the Winter Meeting of the Medical Research Society, London, England, December 1991. *Clinical Science* 1992; **82**(Suppl.26):35P.

S J D Brecker, H B Xiao, D G Gibson.
Flow reversal in the superior vena cava: a cause of added presystolic sounds.
Presented at the Winter Meeting of the Medical Research Society, London, England, December 1991. *Clinical Science* 1992; **82**(Suppl.26):36P.

S J D Brecker, C H Lee, D G Gibson.
Isovolumic relaxation time and incoordination: important determinants of the Doppler A/E ratio in left ventricular disease.
Presented at the Winter Meeting of the Medical Research Society, London, England, December 1991. *Clinical Science* 1992; **82**(Suppl.26):35P.

S J D Brecker, R Roberts, R N Stevenson, S Uthayakumar, A D Timmis, R Balcon.
Coagulation factor analysis and clinical characteristics of acute myocardial infarction with normal coronary arteries.
Presented at the Winter Meeting of the Medical Research Society, London, England, December 1991. *Clinical Science* 1992; **82**(Suppl.26):35P-36P.

S J Brecker, H B Xiao, D G Gibson.
Presystolic sounds due to flow reversal in the superior vena cava.
Presented at the 41st Annual Scientific Sessions of the American College of Cardiology, Dallas, USA, April 1992. *Journal of the American College of Cardiology* 1992; **19**(suppl A):320A.

S J Brecker, C H Lee, H B Xiao, M E Fox, D G Gibson.
Severely depressed subendocardial function in dilated cardiomyopathy is potentially reversible.
Presented at the 41st Annual Scientific Sessions of the American College of Cardiology, Dallas, USA, April 1992. *Journal of the American College of Cardiology* 1992; **19**(suppl A):130A.

S J Brecker, B B Stojnic, H B Xiao, M Mbaissouroum, D G Gibson.
Prolonged right ventricular systole impairs left ventricular filling in pulmonary hypertension.
Presented at the 41st Annual Scientific Sessions of the American College of Cardiology, Dallas, USA, April 1992. *Journal of the American College of Cardiology* 1992; **19**(suppl A):394A.

S J Brecker, H B Xiao, D G Gibson.
Presystolic sounds due to flow reversal in the superior vena cava.
Presented at the European Medical Research Group, London, England, December 1991. *Postgraduate Medical Journal* 1992; **68**:386.

S J D Brecker, C H Lee, D G Gibson.
The duration and nature of isovolumic relaxation determine the Doppler A/E ratio in left ventricular disease.
Presented at the Annual Meeting of the British Cardiac Society, Harrogate, England, May 1992. *British Heart Journal* 1992; **68**:130.

S J D Brecker, B B Stojnic, H B Xiao, D G Gibson.
Ventricular interactions in pulmonary hypertension: impaired left ventricular filling due to prolonged right ventricular systole.
Presented at the Annual Meeting of the British Cardiac Society, Harrogate, England, May 1992. *British Heart Journal* 1992; **68**:144.

M Y Henein, **S J D Brecker**, H B Xiao, B B Stojnic, D G Gibson.
Improved left ventricular subendocardial function following coronary angioplasty.
Presented at the Annual Meeting of the British Cardiac Society, Harrogate, England, May 1992. *British Heart Journal* 1992; **68**:138.

S P Karwatowski, **S J Brecker**, G Z Yang, M St.John Sutton, S R Underwood.
Abnormalities of left ventricular wall motion in ischaemic heart disease: a comparison of Doppler echocardiography and magnetic resonance velocity mapping.
Presented at the Annual Meeting of the British Cardiac Society, Harrogate, England, May 1992. *British Heart Journal* 1992; **68**:125.

S J D Brecker, H B Xiao, D G Gibson.
Sounds in the superior vena cava caused by presystolic flow reversal: a sign of right ventricular disease.
Presented at the Annual Meeting of the British Cardiac Society, Harrogate, England, May 1992. *British Heart Journal* 1992; **68**:97.

S P Karwatowski, **S Brecker**, G Z Yang, M St.John Sutton, D N Firmin, S R Underwood, D B Longmore.
Assessment of diastolic mitral flow in ischaemic heart disease: a comparison of Doppler echocardiography and magnetic resonance velocity mapping.
Presented at the Society of Magnetic Resonance in Medicine, Berlin, Germany, August 1992. *Proceedings of the Society of Magnetic Resonance in Medicine* 1992:2521.

S P Karwatowski, **S Brecker**, G Z Yang, M St.John Sutton, D N Firmin, S R Underwood, D B Longmore.
A comparison of diastolic left ventricular wall velocity measured by magnetic resonance velocity mapping with diastolic filling measured by transthoracic echocardiography in patients with ischaemic heart disease.
Presented at the Society of Magnetic Resonance in Medicine, Berlin, Germany, August 1992.
Proceedings of the Society of Magnetic Resonance in Medicine 1992:2522.

M Y Henein, **S J D Brecker**, H B Xiao, D G Gibson.
Resting left ventricular diastolic abnormalities in coronary artery stenosis and myocardial infarction.
Presented at the XIVth Congress of the European Society of Cardiology, Barcelona, Spain, August 1992. *European Heart Journal* 1992; **13**(Abstr. Suppl.):23.

S J D Brecker, H B Xiao, J Sparrow, D G Gibson.
Beneficial haemodynamic effects of short atrioventricular delay dual chamber pacing in dilated cardiomyopathy.
Presented at the XIVth Congress of the European Society of Cardiology, Barcelona, Spain, August 1992. *European Heart Journal* 1992; **13**(Abstr. Suppl.):241.

S J D Brecker, H B Xiao, M E Fox, D G Gibson.
Effects of phosphodiesterase inhibition upon depressed subendocardial function in dilated cardiomyopathy: interactions between systolic and diastolic function.
Presented at the XIVth Congress of the European Society of Cardiology, Barcelona, Spain, August 1992. *European Heart Journal* 1992; **13**(Abstr. Suppl.):257.

S J D Brecker, J Sparrow, H B Xiao, D G Gibson.
A shortened filling period in dilated cardiomyopathy limits exercise capacity and is potentially reversible.
Presented at the XIVth Congress of the European Society of Cardiology, Barcelona, Spain, August 1992. *European Heart Journal* 1992; **13**(Abstr. Suppl.):50.

S P Karwatowski, **S Brecker**, M St.John Sutton, S R Underwood, D B Longmore.
Abnormalities of left ventricular wall motion in ischaemic heart disease: a comparison of Doppler echocardiography and magnetic resonance velocity mapping.
Presented at the XIVth Congress of the European Society of Cardiology, Barcelona, Spain, August 1992. *European Heart Journal* 1992; **13**(Abstr. Suppl.):22.

S J D Brecker, H B Xiao, J Sparrow, D G Gibson.
Short atrioventricular delay dual chamber pacing in dilated cardiomyopathy: beneficial haemodynamic effects.
Presented at the 10th European Conference of the International Society of Noninvasive Cardiology, Rotterdam, The Netherlands, October 1992. *Programme & Abstracts of the 10th European Conference of the International Society of Noninvasive Cardiology* 1992; 40.

S J D Brecker, C H Lee, H B Xiao, D G Gibson.
Effects of intravenous phosphodiesterase inhibition upon subendocardial function in dilated cardiomyopathy: systolic and diastolic interactions.
Presented at the 10th European Conference of the International Society of Noninvasive Cardiology, Rotterdam, The Netherlands, October 1992. *Programme & Abstracts of the 10th European Conference of the International Society of Noninvasive Cardiology* 1992; 54.

M Y Henein, **S J Brecker**, H B Xiao, D G Gibson.
Improved left ventricular subendocardial function following successful coronary angioplasty.
Presented at the 10th European Conference of the International Society of Noninvasive Cardiology, Rotterdam, The Netherlands, October 1992. *Programme & Abstracts of the 10th European Conference of the International Society of Noninvasive Cardiology* 1992; 79.

M Y Henein, **S J Brecker**, H B Xiao, D G Gibson.
The Bernheim A wave: obstructed right ventricular inflow or atrial crosstalk ?
Presented at the 10th European Conference of the International Society of Noninvasive Cardiology, Rotterdam, The Netherlands, October 1992. *Programme & Abstracts of the 10th European Conference of the International Society of Noninvasive Cardiology* 1992; 78.

H B Xiao, **S J Brecker**, D G Gibson.
Different effects of right ventricular pacing and left bundle branch block on left ventricular function.
Presented at the 10th European Conference of the International Society of Noninvasive Cardiology, Rotterdam, The Netherlands, October 1992. *Programme & Abstracts of the 10th European Conference of the International Society of Noninvasive Cardiology* 1992; 36.

S J Brecker, H B Xiao, J Sparrow, D G Gibson.
Short atrioventricular delay DDD pacing in dilated cardiomyopathy: beneficial effects upon ventricular filling time and exercise capacity.
Presented at the 65th Scientific Sessions of the American Heart Association, New Orleans, USA, November 1992. *Circulation* 1992; **86**(suppl I):I-808.

M Y Henein, **S J Brecker**, H B Xiao, D G Gibson.
Improved left ventricular subendocardial function following successful coronary angioplasty.
Presented at the 65th Scientific Sessions of the American Heart Association, New Orleans, USA, November 1992. *Circulation* 1992; **86**(suppl I):I-378.

M Y Henein, **S J Brecker**, H B Xiao, D G Gibson.
The Bernheim A wave: obstructed right ventricular inflow or atrial crosstalk ?
Presented at the 65th Scientific Sessions of the American Heart Association, New Orleans, USA, November 1992. *Circulation* 1992; **86**(suppl I):I-660.

M Mbaissouroum, **S J Brecker**, H B Xiao, M Y Henein, D G Gibson.
Shortened filling period in dilated cardiomyopathy: additional effects on heart rate variability?
Presented at the 65th Scientific Sessions of the American Heart Association, New Orleans, USA, November 1992. *Circulation* 1992; **86**(suppl I):I-659.

H B Xiao, **S J Brecker**, D G Gibson.
Different effects of right ventricular pacing and left bundle branch block on left ventricular function.
Presented at the 65th Scientific Sessions of the American Heart Association, New Orleans, USA, November 1992. *Circulation* 1992; **86**(suppl I):I-452.

M Mbaissouroum, **S J Brecker**, H Xiao, M Henein, C O'Sullivan, D G Gibson.
La diminution du temps de remplissage ventriculaire gauche dans la myocardiopathie a-t-elle un effet sur la variabilité de la fréquence cardiaque?
Presented at the Third European Meeting of the French Society of Cardiology, Paris, France, January 1993. *Archives des Maladies du Cœur et des Vaisseaux* 1993; **86**:169.

S P Karwatowski, **S J Brecker**, G Z Yang, M St.John Sutton, D N Firmin, S R Underwood, D B Longmore.
Left ventricular regional long-axis wall motion assessed with magnetic resonance velocity mapping: a comparison with Doppler echocardiographic transmitral filling in ischemic heart disease.
Presented at the Society for Magnetic Resonance Imaging, San Francisco, USA, March 1993. *Journal of Magnetic Resonance Imaging* 1993; **3**:103.

S P Karwatowski, **S J Brecker**, G Z Yang, M St.John Sutton, D N Firmin, S R Underwood, D B Longmore.
Regional long-axis ventricular wall velocity measured with magnetic resonance velocity mapping: comparison with M-mode echocardiography.
Presented at the Society for Magnetic Resonance Imaging, San Francisco, USA, March 1993. *Journal of Magnetic Resonance Imaging* 1993; **3**:103.

H B Xiao, C Roy, **S J D Brecker**, D G Gibson.
Very early left ventricular mechanical activity in dilated cardiomyopathy - evidence for "concealed activation".
Presented at the Annual Meeting of the British Cardiac Society, London, England, May 1993. *British Heart Journal* 1993; **69**(suppl):P9.

S J D Brecker, J S R Gibbs, M H Yacoub, D G Gibson.
Comparison of Doppler derived haemodynamics and simultaneous high fidelity pressure measurement in severe pulmonary hypertension.
Presented at the Annual Meeting of the British Cardiac Society, London, England, May 1993. *British Heart Journal* 1993; **69**(suppl):P25.

H B Xiao, **S J D Brecker**, D G Gibson.
Relative effects of ventricular mass and conduction disturbance on activation in left ventricular hypertrophy.
Presented at the Annual Meeting of the British Cardiac Society, London, England, May 1993. *British Heart Journal* 1993; **69**(suppl):P34.

S J D Brecker, J S R Gibbs, M H Yacoub, D G Gibson.
Comparison of Doppler derived haemodynamics and simultaneous high fidelity pressure measurement in severe pulmonary hypertension.
Presented at the XVth Congress of the European Society of Cardiology, Nice, France, August 1993. *European Heart Journal* 1993; **14**(Abstr. Suppl.):12.

H B Xiao, **S J D Brecker**, D G Gibson.
Relative effects of ventricular mass and conduction disturbance on activation in left ventricular hypertrophy.
Presented at the XVth Congress of the European Society of Cardiology, Nice, France, August 1993. *European Heart Journal* 1993; **14**(Abstr. Suppl.):456.

S J Brecker, J S R Gibbs, M H Yacoub, D G Gibson.
Comparison of Doppler derived haemodynamics and simultaneous high fidelity pressure measurement in severe pulmonary hypertension.
Presented at the 11th European Conference of the International Society of Noninvasive Cardiology, Budapest, Hungary, October 1993. *Hungarian Society of Cardiology Working Group of Noninvasive Cardiology* 1993;60.

X Y Jin, **S J Brecker**, K Wong, J R Pepper, D G Gibson.
Immediate effects on left ventricular function of correcting aortic stenosis with concomitant coronary revascularization: a perioperative study.
Presented at the 11th European Conference of the International Society of Noninvasive Cardiology, Budapest, Hungary, October 1993. *Hungarian Society of Cardiology Working Group of Noninvasive Cardiology* 1993;62.

M Y Henein, D Patel, **S J Brecker**, D G Gibson.
Diastolic abnormalities of left ventricular subendocardial function in unstable angina.
Presented at the 11th European Conference of the International Society of Noninvasive Cardiology, Budapest, Hungary, October 1993. *Hungarian Society of Cardiology Working Group of Noninvasive Cardiology* 1993;63.

H B Xiao, **S J Brecker**, D G Gibson.
Relative effects of ventricular mass and conduction aberration on activation in left ventricular hypertrophy.
Presented at the 11th European Conference of the International Society of Noninvasive Cardiology, Budapest, Hungary, October 1993. *Hungarian Society of Cardiology Working Group of Noninvasive Cardiology* 1993;93.

J N Shephard, **S J Brecker**, R Underwood, T Evans.
Comparison of measurement of left ventricular ejection fraction by radionuclide ventriculography, non-imaging nuclear probe and transthoracic echocardiography.
Presented at the Joint Meeting of the Intensive Care Society and the Paediatric Intensive Care Society, London, England, October 1993. *Clinical Intensive Care* 1993; **4**:312.

S J Brecker, J S R Gibbs, M H Yacoub, D G Gibson.
Comparison of Doppler derived haemodynamics and simultaneous high fidelity pressure measurement in severe pulmonary hypertension.
Presented at the 66th Scientific Sessions of the American Heart Association, Atlanta, USA, November 1993. *Circulation* 1993; **88**(suppl I):I-68.

H B Xiao, C Roy, **S J Brecker**, D G Gibson.
Very early left ventricular mechanical activity in dilated cardiomyopathy - evidence for "concealed activation".
Presented at the 66th Scientific Sessions of the American Heart Association, Atlanta, USA, November 1993. *Circulation* 1993; **88**(suppl I):I-312.

H B Xiao, **S J Brecker**, M Y Henein, X Y Jin, D G Gibson.
Absent septal q wave: an unrecognised hallmark of the effects of abnormal activation pattern on left ventricular diastolic function.
Presented at the 66th Scientific Sessions of the American Heart Association, Atlanta, USA, November 1993. *Circulation* 1993; **88**(suppl I):I-346.

C J Garratt, M J Griffith, G Young, **S J Brecker**, N Curzen, A Rickards.
The value of physical signs in the diagnosis of ventricular tachycardia.
Presented at the 66th Scientific Sessions of the American Heart Association, Atlanta, USA, November 1993. *Circulation* 1993; **88**(suppl I):I-502.

M Petrou, K Wong, M Albertucci, **S J Brecker**, M H Yacoub.
An evaluation of unstented aortic homografts for the treatment of prosthetic aortic valve endocarditis.
Presented at the 66th Scientific Sessions of the American Heart Association, Atlanta, USA, November 1993. *Circulation* 1993; **88**(suppl I):I-539.

X Y Jin, **S J Brecker**, J Carey, K Wong, M Albertucci, D G Gibson, J R Pepper.
Comparison of left ventricular performance immediately after aortic valve replacement using crystalloid or blood cardioplegia.
Presented at the 43rd Annual Scientific Sessions of the American College of Cardiology, Atlanta, USA, March 1994. *Journal of the American College of Cardiology* 1994; **23**(suppl):304A.

X Y Jin, H B Xiao, **S J Brecker**, J R Pepper, D G Gibson.
The effects of incoordinate tension development on left ventricular systolic function in aortic stenosis.
Presented at the Annual Meeting of the British Cardiac Society, Torquay, England, May 1994. *British Heart Journal* 1994; **71**(suppl):P14.

X Y Jin, **S J Brecker**, J Carey, K Wong, M Albertucci, D G Gibson, J R Pepper.
Comparison of left ventricular performance immediately after aortic valve replacement using crystalloid or blood cardioplegia.
Presented at the Annual Meeting of the British Cardiac Society, Torquay, England, May 1994. *British Heart Journal* 1994; **71**(suppl):P75.

X Y Jin, **S J Brecker**, K Wong, J S Wolf, J R Pepper, D G Gibson.
Very early changes in left ventricular function after valve replacement for aortic stenosis.
Presented at the Joint XIIth World Congress of Cardiology and XVIth Congress of the European Society of Cardiology, Berlin, Germany, September 1994. *European Heart Journal* 1994; **15**(Abstr. Suppl.):231.

X Y Jin, **S J Brecker**, J Carey, K Wong, M Albertucci, D G Gibson, J R Pepper.
Comparison of left ventricular performance immediately after aortic valve replacement using crystalloid or blood cardioplegia.
Presented at the Joint XIIth World Congress of Cardiology and XVIth Congress of the European Society of Cardiology, Berlin, Germany, September 1994. *European Heart Journal* 1994; **15**(Abstr. Suppl.):334.

S J Brecker, P A Kelly, T P Chua, D G Gibson.
Effects of permanent dual chamber pacing in end-stage dilated cardiomyopathy.
Presented at the 68th Scientific Sessions of the American Heart Association, Anaheim, USA, November 1995. *Circulation* 1995; **92**(suppl I):I-724.

S J D Brecker, P A Kelly, T P Chua, D G Gibson.
Effects of permanent dual chamber pacing in end-stage dilated cardiomyopathy.
Presented at the Annual Meeting of the British Cardiac Society, Glasgow, Scotland, May 1996. *Heart* 1996; **75**(suppl 1):P17.

S J D Brecker, T W Koh, A D Timmis, M T Rothman, C A Layton, R Balcon.
Coronary stenting for unstable angina is safe and effective.
Presented at the Annual Meeting of the British Cardiac Society, Glasgow, Scotland, May 1996. *Heart* 1996; **75**(suppl 1):P27.

S J D Brecker, T W Koh, A D Timmis, M T Rothman, C A Layton, R Balcon.
Coronary stenting for unstable angina is safe and effective.
Presented at the XVIIIth Congress of the European Society of Cardiology, Birmingham, United Kingdom, August 1996. *European Heart Journal* 1996; **17**(Abstr. Suppl):365.

S J D Brecker, E W Leatham, A N Deaner, D S Fluck, M Preston, M T Rothman.
Implant experience and six-month angiographic follow-up of the Cordis coronary stent.
Presented at the XVIIIth Congress of the European Society of Cardiology, Birmingham, United Kingdom, August 1996. *European Heart Journal* 1996; **17**(Abstr. Suppl.):412.

C Varma, P O'Callaghan, C New, M Meara, K Hnatkova, E Rowland, W J McKenna, **S J Brecker**.
Does acute multisite pacing for heart failure improve ventricular coordination?
Presented at the 72nd Scientific Sessions of the American Heart Association, Atlanta, USA, November 1999. *Circulation* 1999; **100**(suppl I):I-515.

C Varma, N Mahon, P O'Callaghan, K Hnatkova, S Fredericks, C New, M Meara, W McKenna, E Rowland, **S J Brecker**.
Multisite pacing for heart failure: is improved ventricular coordination the mechanism of benefit?
Presented at the Annual Meeting of the British Cardiac Society, Glasgow, Scotland, May 2000. *Heart* 2000; **83**(suppl 1):P58.

C Varma, P O'Callaghan, N Mahon, C New, M Meara, W McKenna, E Rowland, **S J Brecker**.
Which is the optimal site of pacing for heart failure ?
Presented at the 21st Annual Scientific Sessions of the North American Society of Pacing and Electrophysiology, Washington, USA, May 2000. *PACE* 2000; **23**(April 2000, Part II):683.

C Varma, P O'Callaghan, N Mahon, C New, M Meara, W McKenna, E Rowland, **S J Brecker**.
Which is the optimal site of pacing for heart failure ?
Presented at the 12th International Congress – Cardiostim, Nice, France, June 2000. *Europace* 2000; (**Supplements 1**):D40.

C Varma, P O'Callaghan, N Mahon, C New, M Meara, W McKenna, E Rowland, **S J Brecker**.
Acute multisite pacing for heart failure: The effect upon ventricular coordination.
Presented at the 12th International Congress – Cardiostim, Nice, France, June 2000. *Europace* 2000; (**Supplements 1**):D310.

C Varma, P O'Callaghan, N Mahon, C New, M Meara, W McKenna, E Rowland, **S J Brecker**.
Which is the optimal site of pacing for heart failure ?
Presented at the XXIInd Congress of the European Society of Cardiology, Amsterdam, The Netherlands, August 2000. *European Heart Journal* 2000; **21**(Abstr. Suppl.):351.

C Varma, N Mahon, P O'Callaghan, K Hnatkova, C New, M Meara, W McKenna, E Rowland, **S J Brecker**.
Multisite pacing for heart failure: maximising contractility may not enhance overall ventricular coordination.
Presented at the XXIInd Congress of the European Society of Cardiology, Amsterdam, The Netherlands, August 2000. *European Heart Journal* 2000; **21**(Abstr. Suppl.):412.

C Varma, P O'Callaghan, S Firoozi, A Bradford, **S Brecker**, E Rowland, W McKenna.
Clinical determinants of benefit in patients with a biventricular pacemaker for heart failure.
Presented at the 50th Annual Scientific Sessions of the American College of Cardiology, Orlando, USA, March 2001. *Journal of the American College of Cardiology* 2001; **37**(suppl A):154A.

C Varma, P O'Callaghan, S Firoozi, **S Brecker**, W McKenna, E Rowland.
Clinical determinants of benefit in patients with a biventricular pacemaker for heart failure.
Presented at the Annual Meeting of the British Cardiac Society, Manchester, England, May 2001. *Heart* 2001; **85**(Suppl I):P44.

S Firoozi, S Sharma, M S Virdee, C Varma, **S J Brecker**, A Murday, P M Elliott, W J McKenna.
Comparison between transcoronary septal ablation and septal myectomy in hypertrophic obstructive cardiomyopathy: a long-term follow up of exercise parameters.
Presented at the 74th Scientific Sessions of the American Heart Association, Anaheim, USA, November 2001. *Circulation* 2001; **104**(suppl II):II-520.

I F Purcell, D E Ward, **S J Brecker**.
Closure of defects of the interatrial septum – a single UK adult centre experience.
Presented at the Annual Meeting of the British Cardiac Society, Harrogate, England, May 2002. *Heart* 2002; **87**(Suppl II):P38.

S Firoozi, P M Elliott, S Sharma, A Murday, **S J Brecker**, M S Hamid, B Sachdev, R Thaman, W J McKenna.
Comparison between transcoronary alcohol septal ablation and septal myectomy in hypertrophic obstructive cardiomyopathy: a long-term follow up of exercise parameters.
Presented at the Annual Meeting of the British Cardiac Society, Harrogate, England, May 2002. *Heart* 2002; **87**(Suppl II):P67.

S J Brecker, A Y Al-Memar.
Transcatheter closure of patent foramen ovale in patients with recurrent cryptogenic posterior circulation ischaemic events.
Neurosciences 2003; **8**(1):47.

A R Saha, **S J Brecker**, A Y Al-Memar.
Transcatheter closure of patent foramen ovale in patients with recurrent cryptogenic posterior circulation ischaemic events.
Presented at the Annual Meeting of the Association of British Neurologists, Cardiff, Wales, April 2003. *Journal of Neurology, Neurosurgery and Psychiatry* 2003; **74**:1454.

S P Sleight, S Vig, D Bevan, **S Brecker**, J A Dormandy, A W Halliday.
Hypercoaguability predicts poor outcome from coronary intervention in patients with peripheral vascular disease.
Presented at the 4th Annual Conference on Arteriosclerosis, Thrombosis and Vascular Biology, Washington DC, USA, 2003. *Arteriosclerosis, Thrombosis and Vascular Biology* 2003;**23**(5):A23.

R Sharma, D Pellerin, D A Gaze, J S Shah, C P Streather, P O Collinson, **S J D Brecker**.
Dobutamine stress echocardiography (DSE) and plasma cardiac troponin T (cTnT) for the detection of severe coronary artery disease in end stage renal failure.
Presented at the Annual Meeting of the British Cardiac Society, Manchester, England, May 2004. *Heart* 2004; **90**(Suppl II):A35.

R Sharma, D Pellerin, D A Gaze, J S Shah, C P Streather, P O Collinson, **S J D Brecker**.
Significance of an elevated plasma cardiac troponin T (cTnT) in end stage renal failure.
Presented at the Annual Meeting of the British Cardiac Society, Manchester, England, May 2004. *Heart* 2004; **90**(Suppl II):A52.

K Mandal, **S Brecker**, J Smith, Q Xu, M Jahangiri.
Autoantibodies against heat shock protein 65 and oxidized low density lipoprotein – evidence for autoimmunity in coronary artery disease.
Presented at the Annual Meeting of the Society of Cardiothoracic Surgeons of Great Britain and Ireland, Guernsey, Channel Islands, March 2004.

R Sharma, D Pellerin, D C Gaze, P O Collinson, C H Streather, **S J Brecker**.
Combined use of dobutamine stress echocardiography and troponin T for the detection of severe coronary disease in end-stage renal failure.
Presented at the 2004 Congress of the European Society of Cardiology, Munich, Germany, August 2004. *European Heart Journal* 2004; **25**(Abstr. Suppl.):552-553.

K Mandal, **S Brecker**, J Smith, Q Xu, M Jahangiri.
Immune reactions against heat shock protein 65 and oxidised low density lipoprotein – does it modulate the severity of coronary artery disease ?
Presented at the 2004 Congress of the European Society of Cardiology, Munich, Germany, August 2004. *European Heart Journal* 2004; **25**(Abstr. Suppl.):602.

R Sharma, D Pellerin, D A Gaze, J S Shah, C P Streather, P O Collinson, **S J Brecker**.
Accuracy of dobutamine stress echocardiography and plasma cardiac troponin T for the detection of severe coronary disease in end stage disease.
Presented at EuroEcho 2004, The 8th Annual Meeting of The European Association of Echocardiography, Athens, Greece, December 2004. *European Journal of Echocardiography* 2004;**5**(Suppl 1):S23.

R Sharma, D Pellerin, D A Gaze, J S Shah, C P Streather, P O Collinson, **S J Brecker**.
Persistently elevated plasma cardiac troponin T in end stage renal disease: a marker of ventricular dilatation.
Presented at EuroEcho 2004, The 8th Annual Meeting of The European Association of Echocardiography, Athens, Greece, December 2004. *European Journal of Echocardiography* 2004;**5**(Suppl 1):S172.

E Merli, S Sutcliffe, T Karu, A Baltabaeva, A Kiotsekoglou, A Marciniak, **S J Brecker**, N Bunce, G R Sutherland.
Can reperfusion be predicted by acute thickening of the at risk myocardium in STEMI? Full pressure *v* pressure limiting reperfusion.
Presented at the Annual Meeting of the British Cardiac Society, Manchester, England, May 2005. *Heart* 2005; **91**(Suppl I):A32.

R Sharma, D Pellerin, D C Gaze, J S Shah, C P Streather, P O Collinson, **S J D Brecker**.
Dobutamine stress echocardiography (DSE) and the resting but not exercise electrocardiograph predict severe coronary artery disease in end stage renal failure.
Presented at the Annual Meeting of the British Cardiac Society, Manchester, England, May 2005. *Heart* 2005; **91**(Suppl I):A68.

R Sharma, D Pellerin, D C Gaze, H Gregson, R Mehta, P O Collinson, **S J D Brecker**.
The mitral E/Ea ratio is an accurate estimate of left ventricular filling pressure and provides prognostic information in end stage renal disease.
Presented at the 16th Annual Scientific Sessions of the American Society of Echocardiography, Boston, USA, June 2005; **18**(5):532.

D C Gaze, R Sharma, D Pellerin, C Streather, **S J Brecker**, P O Collinson.
Prognostic value of ischemia-modified albumin in end stage renal disease.
Presented at the 57th Annual Meeting of the American Association for Clinical Chemistry, Orlando, USA, July 2005. *Clinical Chemistry* 2005;**51**:A5.

R Sharma, D C Gaze, D Pellerin, R Mehta, P O Collinson, **S J Brecker**.
The significance of an elevated N-terminal pro-B-type natriuretic peptide level in end stage renal disease.
Presented at the 2005 Congress of the European Society of Cardiology, Stockholm, Sweden, September 2005. *European Heart Journal* 2005; **26**(Suppl 1):274.
E Merli, S Sutcliffe, T Karu, A Baltabaeva, A Marciniak, **S J Brecker**, N Bunce, G R Sutherland.
Can reperfusion be predicted by acute thickening of the at risk myocardium in STEMI? Full pressure vs pressure limited reperfusion.
Presented at the 2005 Congress of the European Society of Cardiology, Stockholm, Sweden, September 2005. *European Heart Journal* 2005; **26**(Suppl 1):300.

R Sharma, D C Gaze, D Pellerin, R Mehta, P O Collinson, **S J Brecker**.
Ischaemia-modified albumin for the detection of ischaemia and risk stratification in end-stage renal disease.
Presented at the 2005 Congress of the European Society of Cardiology, Stockholm, Sweden, September 2005. *European Heart Journal* 2005; **26**(Suppl 1):355-356.

R Sharma, E Chemla, M Tome, **S J Brecker**, R Chang, D Pellerin.
A prognostic risk score to predict outcome after renal transplantation.
Presented at the 2005 Congress of the European Society of Cardiology, Stockholm, Sweden, September 2005. *European Heart Journal* 2005; **26**(Suppl 1):575.

R Sharma, E Chemla, T Maite, R Mehta, **S J Brecker**, H Gregson, R Change, D Pellerin.
A pre-operative cardiovascular score based on echocardiographic parameters to predict outcome after renal transplantation.
Presented at the 78th Scientific Sessions of the American Heart Association, Dallas, USA, November 2005. *Circulation* 2005; **17**(112):U509.

R Sharma, D C Gaze, P Collinson, D Pellerin, C H Streather, **S J Brecker**.
Ischemia modified albumin for the detection of ischemia and risk stratification in end stage renal disease.
Presented at the 78th Scientific Sessions of the American Heart Association, Dallas, USA, November 2005. *Circulation* 2005; **17**(112):U628.

E Merli, A Fischer, T Karu, A Baltabaeva, A Marciniak, N Bunce, **S Brecker**, G R Sutherland.
Can reperfusion be predicted by acute thickening of at risk myocardium in STEMI? Full pressure vs pressure limiting reperfusion.
Presented at EuroEcho 2005, The 9th Annual Meeting of The European Association of Echocardiography, Florence, Italy, December 2005. *European Journal of Echocardiography* 2005;**6**(Suppl 1):S12.

R Sharma, D Pellerin, D C Gaze, C H Streather, H Gregson, R Mehta, P O Collinson, **S J D Brecker**.
Baseline cardiac structural and functional characteristics and prognostic significance of end stage renal disease patients with elevated N-terminal Pro-B-Type natriuretic level.
Presented at EuroEcho 2005, The 9th Annual Meeting of The European Association of Echocardiography, Florence, Italy, December 2005. *European Journal of Echocardiography* 2005;**6**(Suppl 1):S36.

R Sharma, E Chemla, M Tome, R Mehta, H Gregson, **S J D Brecker**, R Chang, D Pellerin.
A cardiovascular score based on echocardiography parameters to predict prognosis after renal transplantation.
Presented at EuroEcho 2005, The 9th Annual Meeting of The European Association of Echocardiography, Florence, Italy, December 2005. *European Journal of Echocardiography* 2005;**6**(Suppl 1):S136.

R Sharma, **S J D Brecker**, D C Gaze, H Gregson, R L Mehta, P O Collinson, D Pellerin.
The application of tissue Doppler imaging for the interpretation of dobutamine stress echo cardiography in end stage renal disease.
Presented at EuroEcho 2005, The 9th Annual Meeting of The European Association of Echocardiography, Florence, Italy, December 2005. *European Journal of Echocardiography* 2005;**6**(Suppl 1):S164.

R Sharma, D Pellerin, D C Gaze, P O Collinson, R Mehta, H L Gregson, C H Streather, **S J D Brecker**.
The mitral E/Ea ratio is an accurate estimate of left ventricular filling pressure and provides prognostic information in end stage renal disease.
Presented at EuroEcho 2005, The 9th Annual Meeting of The European Association of Echocardiography, Florence, Italy, December 2005. *European Journal of Echocardiography* 2005;**6**(Suppl 1):S174.

R Sharma, D Pellerin, D C Gaze, P O Collinson, C H Streather, H Gregson, **S J D Brecker**.
Dobutamine stress echocardiography and the resting but not exercise electrocardiograph predict severe coronary artery disease in renal transplant candidates.
Presented at EuroEcho 2005, The 9th Annual Meeting of The European Association of Echocardiography, Florence, Italy, December 2005. *European Journal of Echocardiography* 2005;**6**(Suppl 1):S190.

R Sharma, D Pellerin, D C Gaze, P O Collinson, H Gregson, C H Streather, **S J D Brecker**.
The mitral E/EA ratio accurately estimates left ventricular filling pressure and predicts outcome in end stage renal disease.
Presented at the Annual Meeting of the British Society of Echocardiography, Birmingham, England, 2005. *Heart* 2006;**92**(Suppl 1):i41.

R Sharma, D Pellerin, D C Gaze, P O Collinson, H Gregson, **S J D Brecker**.
Mitral annular calcification predicts mortality and coronary artery disease in patients with end stage renal disease.
Presented at the 55th Annual Scientific Sessions of the American College of Cardiology, Atlanta, USA, March 2006. *Journal of the American College of Cardiology* 2006; **47**(Suppl 1):100A.

R Sharma, **S Brecker**, D Gaze, P Collinson, R Mehta, D Pellerin.
Myocardial velocities during dobutamine stress echocardiography for coronary artery disease diagnosis and predicting mortality in end stage renal disease: A tissue Doppler imaging study.
Presented at the Annual Meeting of the British Cardiac Society, Glasgow, Scotland, April 2006. *Heart* 2006; **92**(Suppl II):A44.

R Sharma, E Chemla, M Tome, **S Brecker**, R Mehta, D Pellerin.
An echocardiography derived prognosis score to predict mortality after renal transplantation.
Presented at the Annual Meeting of the British Cardiac Society, Glasgow, Scotland, April 2006. *Heart* 2006; **92**(Suppl II):A44.

R Sharma, D Gaze, D Pellerin, P Collinson, H Gregson, R Mehta, **S Brecker**.
N-terminal pro-B-type natriuretic peptide levels predict mortality and cardiac disease in patients with end stage renal disease.
Presented at the Annual Meeting of the British Cardiac Society, Glasgow, Scotland, April 2006. *Heart* 2006; **92**(Suppl II):A50.

R Sharma, R L Mehta, **S J D Brecker**, D C Gaze, P O Collinson, H Gregson, C H Streather, D Pellerin.
The diagnostic and prognostic value of tissue Doppler imaging during dobutamine stress echocardiography in end stage renal disease.
Presented at the World Congress of Cardiology and Annual Conress of the European Society of Cardiology, Barcelona, Spain, September 2006. *European Heart Journal* 2006; **27**(Suppl 1):860.

R Sharma, D Pellerin, D C Gaze, P O Collinson, H Gregson, **S J D Brecker**.
Mitral annular calcification predicts mortality and cardiac disease in end stage renal disease.
Presented at the Annual Meeting of the British Society of Echocardiography, Bournemouth, England, 2006. *European Journal of Echocardiography* 2007;**8**(3):S30.

A T Papgeorghiou, F Prefumo, D C Gaze, R Sharma, **S J D Brecker**, P O Collinson, B Thilaganathan.
Elevated first-trimester maternal serum ischemia modified albumin – evidence for hypoxia-driven placental growth, and a marker for the development of severe pre-eclampsia.
Presented at the Blair Bell Research Society, October 2006. *BJOG: An International Journal of Obstetrics and Gynaecology* 2007;**114**(8):1034.

R Sharma, D Pellerin, R Mehta, H Gregson, D C Gaze, P O Collinson, **S J Brecker**.
Reduced longitudinal myocardial tissue velocities and myocardial deformation with strain rate imaging in patients with end stage renal disease and apparent normal left ventricular ejection fraction.
Presented at EuroEcho 2006, The 10th Annual Meeting of The European Association of Echocardiography, Prague, Czech Republic, December 2006. *European Journal of Echocardiography* 2006;**7**(Suppl 1):S163-164.

R Sharma, D Pellerin, D C Gaze, P O Collinson, H Gregson, C H Streather, **S J D Brecker**.
Mitral annular calcification predicts mortality, cardiac events and coronary artery disease in patients with end stage renal disease.
Presented at EuroEcho 2006, The 10th Annual Meeting of The European Association of Echocardiography, Prague, Czech Republic, December 2006. *European Journal of Echocardiography* 2006;**7**(Suppl 1):S195-196.

R Sharma, D Pellerin, H Gregson, C Streather, D Gaze, P Collinson, **S Brecker**.
Myocardial deformation imaging for the prediction of subclinical left ventricular dysfunction and mortality in asymptomatic patients with end stage renal disease and normal left ventricular ejection fraction.
Presented at the Annual Meeting of the British Cardiac Society, Glasgow, Scotland, June 2007. *Heart* 2007; **93**(Suppl I):A74.

R Sharma, D Gaze, P O Collinson, D Pellerin, H Gregson, C H Streather, **S J D Brecker**.
The evaluation of ischemia modified albumin as a marker of myocardial ischemia in end stage renal disease.
Presented at the 76th Congress of the European Atherosclerosis Society, Helsinki, Finland, June 2007. *Atherosclerosis* 2007;**8**(1):150.

E Merli, M Chaparro, A Marciniak, A Baltabaeva, B Bijnens, N Bunce, **S Brecker**, G Sutherland.
Changes in acute infarct zone wall thickness after primary PCI depend on time to treatment and are predictive of late remodelling. An echocardiographic study.
Presented at EuroEcho 2007, The 11th Annual Meeting of The European Association of Echocardiography, Lisbon, Portugal, December 2007. *European Journal of Echocardiography* 2007;**8**(Suppl 1):P668.

R Sharma, D Pellerin, H Gregson, C H Streather, **S J Brecker**.
Myocardial deformation imaging for the prediction of subclinical left ventricular systolic dysfunction and mortality in asymptomatic patients with end stage renal disease.
Presented at the 2008 Congress of the European Society of Cardiology, Munich, Germany, August 2008. *European Heart Journal* 2008; **26(**Suppl 1):250-251.

D A Roy, S Ketty, M Jahangiri, J-C Laborde, **S J Brecker**.
How does mortality after transcatheter aortic valve implantation compare to that of an age and comorbidity matched population ?
Presented at the 22nd Annual Symposium of Transcatheter Cardiovascular Therapeutics, Washington DC, USA, September 2010. *Journal of the American College of Cardiology* 2010; **56**(13)(Suppl B):B114.

S G Jones, N R Abdulkareem, D Roy, **S J Brecker**, M Jahangiri.
Outcome of patients with aortic stenosis referred to a multidisciplinary meeting for transcatheter valve.
Annual Meeting Society for Cardiothoracic Surgery in Great Britain and Ireland, London, England, March 2011.

S G Jones, N Abdulkareem, **S J Brecker**, M Jahangiri.
Outcomes of patients with previous cardiac surgery undergoing TAVI compared with redo surgical AVR.
Annual Meeting Society for Cardiothoracic Surgery in Great Britain and Ireland, London, England, March 2011.

M Khawaja, R Rajani, A Cook, A Khavandi, A Moynagh, S Choudhary, M S Spence, S Brown, S Q Khan, N Walker, U Trivedi, N Hutchinson, A J De Belder, N Moat, D J Blackman, R D Levy, G Manoharan, D Roberts, S S Khogali, S S Khogali, **S J Brecker**, A Baumbach, M Mullen, J-C Laborde**,** D Hildick-Smith.
Factors affecting need for permanent pacemaker insertion following CoreValve transcatheter aortic valve implantation - the UK CoreValve Collaborative.
Presented at EuroPCR , Paris, France, May 2011. *EuroIntervention* 2011; **7**(Suppl M): M199.

S Jones, N Abdulkareem, D Roy, **S Brecker**, M Jahangiri.
Residual aortic and mitral regurgitation following transcatheter aortic valve implantation.
Annual Meeting of The International Society for Minimally Invasive Cardiothoracic Surgery, Washington DC, USA, June 2011.

M Z Khawaja, H Valli, V Mahadevan, P MacCarthy, J Nolan, C Densem, D Roberts, M Spence, S Doshi, D Muir, S Choudhary, **S Brecker**, B Prendergast, R Stables, M Mullen, A De Belder, M Thomas, S Redwood, D Hildick-Smith.
Standalone balloon aortic valvuloplasty: Indications and outcomes from the UK in the transcatheter valve era.
Presented at the 23rd Annual Symposium of Transcatheter Cardiovascular Therapeutics, San Francisco, USA, November 2011. *Journal of the American College of Cardiology* 2011; **58**(20)(Suppl B):B33.

D Dvir, J-C Laborde, **S Brecker**, S Bleiziffer, D Hildick-Smith, A Colombo, F Descoutures, N E Moat, C Hengstenberg, R Bekerdijan, T Lefevre, V Guetta, H Nissen, J M Hernández, D Roy, F De Marco, R Teles, A Segev, A Baumbach, N Dumonteil, C Fiorina, D Ioanes, M Napodano, D Tchetche, G P Ussia, M W Merx, M Abdel-Wahab, R Kornowski.
Presented at the 23rd Annual Symposium of Transcatheter Cardiovascular Therapeutics, San Francisco, USA, November 2011. *Journal of the American College of Cardiology* 2011; **58**(20)(Suppl B):B36.

A Linke, U Gerckens, P Wenaweser, C Tamburino, J Bosmans, **S Brecker**, R Bauernschmitt.
Treatment of high risk aortic stenosis patients with transcatheter Medtronic CoreValve implantation : Results from the International Multi-center ADVANCE Study.
Presented at the 61st Annual Scientific Sessions of the American College of Cardiology and ACC-i2 with TCT, Chicago, USA, March 2012. *Journal of the American College of Cardiology* 2012; **59**(13)(Suppl A):A2-A3.

M T Yates, G Soppa, O Valencia, S G Jones, **S Brecker**, M Jahangiri.
The effect of ESC/EACTS guidelines on myocardial revascularisation on referral patterns to cardiac surgery.
92nd Annual Meeting of the American Association for Thoracic Surgery, San Francisco, USA, April 2012.

S Jones, N R Abdulkareem, D Roy, **S Brecker**, M Jahangiri.
Aortic and mitral regurgitation persist following transcatheter aortic valve implantation.
Annual Meeting Society for Cardiothoracic Surgery in Great Britain and Ireland, Manchester, England, April 2012.

M Bhabra, S Khogali, D Hildick-Smith, **S Brecker**, M Jahangiri, C Mario, N Moat, J Cockburn, U Trivedi.
Clinical and procedural outcomes from transcatheter aortic valve implantation via the trans-aortic approach.
Annual Meeting Society for Cardiothoracic Surgery in Great Britain and Ireland, Manchester, England, April 2012.

A Alassar, J Davey, **S Brecker**, M Jahangiri.
One year mortality following transcatheter aortic valve implantation: incidence, predictive factors, and causes of deaths.
Annual Meeting Society for Cardiothoracic Surgery in Great Britain and Ireland, Manchester,England, April 2012.

A Alassar, N Abdulakareem, O Valencia, **S J Brecker**, M Jahangiri.
Acute kidney injury following TAVI: incidence, predictive factors and prognostic effects.
Presented at EuroPCR , Paris, France, May 2012. *EuroIntervention* 2012;**8**(Suppl N):N161.

R Bauernschmitt, U Gerckens, P Wenaweser, C Tamburino, J Bosmans, **S Brecker**, A Linke.
Treatment of aortic stenosis with TAVI in a real world population: the international multi-center ADVANCE study.
Presented at EuroPCR , Paris, France, May 2012. *EuroIntervention* 2012;**8**(Suppl N):N190.

A Linke, J Bosmans, U Gerckens, P Wenaweser, C Tamburino, **S Brecker**, R Bauernschmitt.
Impact of gender on the outcomes of TAVI: insights from the multicenter ADVANCE study.
Presented at EuroPCR , Paris, France, May 2012. *EuroIntervention* 2012;**8**(Suppl N):N196.

J Bosmans, R Bauernschmitt, U Gerckens, P Wenaweser, C Tamburino, **S Brecker**, A Linke.
Neurological complications after treatment of aortic stenosis with TAVI in a real world population: the international multicenter ADVANCE study.
Presented at EuroPCR , Paris, France, May 2012. *EuroIntervention* 2012;**8**(Suppl N):N198.
M Khawaja, M Sohal, H Valli, R Dworakowski, S J Pettit, D Roy, J Newton, H Schneider, G Manoharan, S Doshi, D Muir, D Roberts, J Nolan, M Gunning, C Densem, M S Spence, S Chowdhary, V S Mahadevan, **S J Brecker**, P MacCarthy, M Mullen, R H Stables, B D Prendergast, A J De Belder, M Thomas, S Redwood, D Hildick-Smith.
Standalone balloon aortic valvuloplasty: indications and outcomes from the UK in the transcatheter valve era.
Presented at EuroPCR , Paris, France, May 2012. *EuroIntervention* 2012;**8**(Suppl N):N200.

D Dvir, J Webb, **S Brecker**, S Bleiziffer, D Hildick-Smith, A Colombo, F Descoutures, N Moat, L Testa, C Hengstenberg, R Bekeredjian, T Lefevre, V Guetta, H Nissen, J M Hernández, D Roy, R Teles, A Segev, A Baumbach, N Dumonteil, C Fiorina, D Ioanes, M Gotzmann, M Napodano, D Tchetche, G Ussia, M Merx, F De Marco, M Abdel-Wahab, J C Laborde, R Kornowski.
Transcatheter aortic valve replacement for the treatment of degenerative bioprosthetic surgical valves: results from the Global Valve-in-Valve Registry.
Presented at EuroPCR , Paris, France, May 2012. *EuroIntervention* 2012;**8**(Suppl N):N211.

D Roy, U Schaefer, V Guetta, D Hildick-Smith, H Moellman, N Dumonteil, T Modine, N Moat, A Linke, J Bosmans, C Morris, N Piazza, D Medvedofsky, T Patterson, F Woitek, M Jahangiri, J C Laborde, **S J Brecker**.
TAVI for pure severe native valve aortic regurgitation.
Presented at EuroPCR , Paris, France, May 2012. *EuroIntervention* 2012;**8**(Suppl N):N211.

A Alassar, N Abdulkareem, O Valencia, **S Brecker**, M Jahangiri.
Acute kidney injury following transcatheter aortic valve implantation: incidence, predictive factors and prognostic effects.
Annual Meeting of The International Society for Minimally Invasive Cardiothoracic Surgery, Los Angeles, USA, May 2102.

A Alassar, J Davey, **S Brecker**, M Jahangiri.
One year mortality following transcatheter aortic valve implantation: incidence, predictive factors and causes of death.
Annual Meeting of The International Society for Minimally Invasive Cardiothoracic Surgery, Los Angeles, USA, May 2102.

S Brecker, R Bauernschmitt, U Gerckens, P Wenaweser, C Tamborino, J Bosmans, A Linke.
Transcatheter aortic valve implantation via the direct aortic access approach: patient characteristics and short-term outcomes form the ADVANCE multicentre study.
Presented at the 2012 Congress of the European Society of Cardiology, Munich, Germany, August 2012. *European Heart Journal* 2012;**33**(Suppl 1):498.

S Brecker, R Bauernschmitt, U Gerckens, P Wenaweser, C Tamborino, J Bosmans, A Linke.
Alternative access transcatheter aortic valve implantation: clinical characteristics and early outcome.
Presented at the 2012 Congress of the European Society of Cardiology, Munich, Germany, August 2012. *European Heart Journal* 2012;**33**(Suppl 1):498.

A Linke, J Bosmans, U Gerckens, P Wenaweser, C Tamborino, **S Brecker**, R Bauernschmitt.
Local vs General Anaesthesia: Impact on the outcomes of transcatheter aortic valve implantation: insights from the multicentre ADVANCE study.
Presented at the 2012 Congress of the European Society of Cardiology, Munich, Germany, August 2012. *European Heart Journal* 2012;**33**(Suppl 1):1098.

D Roy, U Schaefer, V Guetta, D Hildick-Smith, H Moellman, N Dumonteil, T Modine, J Bosmans, N Moat, A Linke, C Morris, A S Petronio, D Champagnac, D Medvedofsky, T Patterson, F Woitek, M Jahangiri, J-C Laborde, **S Brecker**.
Transcatheter aortic valve implantation for pure severe native aortic regurgitation.
Presented at PCR London Valves, London, England, September 2012. *EuroIntervention* 2012; **8**(Suppl Q): Q112.

D Dvir, J Webb, M Pasic, S Bleiziffer, R Waksman, U Schaefer, A Colombo, J Rodés-Cabeau, H Treede, D Hildick-Smith, F Descoutures, T Walther, C Hengstenberg, H Nissen, R Bekeredjian, E Ferrari, S Windescker, **S Brecker**, J-C Laborde, R Kornowski.
Transcatheter aortic valve replacement for degenerative bioprosthetic surgical valves: results from the Global Valve-in-Valve Registry.
Presented at PCR London Valves, London, England, September 2012. *EuroIntervention* 2012; **8**(Suppl Q): Q116.

G Bruschi, S Davies, F De Marco, A Hafid, A Van Boven, D Tchetche, N Dumonteil, B Marcheix, H Danenberg, G Coletti, H Bushnaq, **S Brecker**, J-C Laborde, D Mazzietelli, R Lange, M Branny, P Branny, J Bosmans, U Trivedi, M Bhabra, P Den Hejer, N Moat.
The European experience with the direct-aortic approach for a self-expandable transcatheter aortic bioprosthesis implantation.
Presented at PCR London Valves, London, England, September 2012. *EuroIntervention* 2012; **8**(Suppl Q): Q122.

D A Roy, J-C Laborde, M Jahangiri, **S Brecker**.
First-in-Man assessment of a dedicated guidewire for transcatheter aortic valve replacement.
Presented at PCR London Valves, London, England, September 2012. *PCR London Valves Programme 2012. e-Abstract.*

D Dvir, J Webb, M Pasic, S Bleiziffer, R Waksman, U Schäfer, A Colombo, J Rodes-Cabau, H Treede, D Hildick-Smith, F Descoutures, T Walther, C Hengstenberg, H Nissen, R Bekerdijan, E Ferrari, S Windecker, **S Brecker**, J-C Laborde, R Kornowski.
Transcatheter aortic valve replacement for degenerative bioprosthetic surgical valves: Results from the Global Valve-in-Valve Registry.
Presented at the 24th Annual Symposium of Transcatheter Cardiovascular Therapeutics, Miami, USA, October 2012. *Journal of the American College of Cardiology* 2012; **60**(17)(Suppl B):B31.

J Bosmans, U Gerckens, P Wenaweser, C Tamburino, **S Brecker**, R Bauernschmitt, A Linke.
Health related quality of life following transcatheter aortic valve implantation: Results from the CoreValve ADVANCE Study.
Presented at the 24th Annual Symposium of Transcatheter Cardiovascular Therapeutics, Miami, USA, October 2012. *Journal of the American College of Cardiology* 2012; **60**(17)(Suppl B):B236.

G Bruschi, S Davies, F De Marco, H Amrane, A Van Boven, B Marcheix, N Dumonteil, H Danenberg, D Tchetche, G Coletti, H Bushnaq, J-C Laborde, **S Brecker**, D Mazzitelli, R Lange, M Branny, J Bosmans, U Trivedi, M Bhabra, P den Heijer, N Moat.
Direct aortic implantation of a self expandable aortic bioprosthesis: The European experience.
Presented at the 24th Annual Symposium of Transcatheter Cardiovascular Therapeutics, Miami, USA, October 2012. *Journal of the American College of Cardiology* 2012; **60**(17)(Suppl B):B264.

D Roy, U Schaefer, V Guetta, D Hildick-Smith, H Mollman, N Dumonteil, T Modine, J Bosmans, N Piazza, N Moat, A Linke, C Morris, D Medvedofsky, F Woitek, M Jahangiri, J-C Laborde, **S Brecker**.
Transcatheter aortic valve replacement for pure severe native valve aortic regurgitation.
Presented at the 24th Annual Symposium of Transcatheter Cardiovascular Therapeutics, Miami, USA, October 2012. *Journal of the American College of Cardiology* 2012; **60**(17)(Suppl B):B264.

G Bruschi, S Davies, F De Marco, H Amrane, A Van Boven, B Marcheix, N Dumonteil, D Tchetche, H Danenberg, G Coletti, H Bushnaq, J Laborde, **S J Brecker**, D Mazzitelli, R Lange, M Branny, P Branny, J M Bosmans, U Trivedi, M Bhabra, P den Heijer, N Moat.
Direct aortic approach for the self-expandable aortic bioprosthesis implantation : The European experience.
49th Annual Meeting of The Society of Thoracic Surgeons, Los Angeles, USA, January 2013.

G Soppa, M Zakkar, **S Brecker**, M Jahangiri.
How to do a trans-aortic transcatheter valve.
Annual Meeting Society for Cardiothoracic Surgery in Great Britain and Ireland, Brighton, England, March 2013.

A Alassar, D Roy, N Abdulkareem, O Valencia, **S Brecker**, M Jahangiri.
Acute kidney injury following transcatheter aortic valve implantation: incidence, risk factors and prognostic effects.
Annual Meeting Society for Cardiothoracic Surgery in Great Britain and Ireland, Brighton, England, March 2013.

M Zakkar, G Soppa, J Smelt, M Yates, **S Brecker**, M Jahangiri.
Safety and feasibility of transaortic approach for transcatheter aortic valve implantation.
Annual Meeting Society for Cardiothoracic Surgery in Great Britain and Ireland, Brighton, England, March 2013.

M Zakkar, A Viviano, M Yates, R Sharma, **S Brecker**, M Jahangiri.
Echocardiographic evidence of valvular changes and left ventricular modelling following transcatheter aortic valve implantation.
Annual Meeting Society for Cardiothoracic Surgery in Great Britain and Ireland, Brighton, England, March 2013.

A Alassar, D Roy, O Valencia, **S Brecker**, M Jahangiri.
Survival, predictive factors and causes of mortality following transcatheter aortic valve implantation.
Annual Meeting Society for Cardiothoracic Surgery in Great Britain and Ireland, Brighton, England, March 2013.

A Alassar, R Joyce, O Valencia, H Markus, N Moat, **S Brecker**, M Jahangiri.
Cerebral embolization during transcatheter aortic valve implantation compared with surgical aortic valve replacement.
Annual Meeting Society for Cardiothoracic Surgery in Great Britain and Ireland, Brighton, England, March 2013.

A Linke, S Bleiziffer, J Bosmans, U Gerckens, P Wenaweser, **S Brecker**, C Tamborino.
One year outcomes in real world patients treated with TAVI : the ADVANCE study.
Presented at EuroPCR , Paris, France, May 2013. *EuroIntervention* 2013; Abstracts of EuroPCR 2013 :129.

S Brecker, S Mealing, J Eaton, M Sculpher, J Bosmans, U Gerckens, P Wenaweser, C Tamborino, S Bleiziffer, N Piazza, N Moat, P Brasseur, R Busca, A Linke.
TAVI for inoperable patients with severe aortic stenosis treated by medical management: a United Kingdom based cost utility analysis on patient level data from the ADVANCE study.
Presented at EuroPCR , Paris, France, May 2013. *EuroIntervention* 2013; Abstracts of EuroPCR 2013 :129.

D Roy, M Jahangiri, R Sharma, **S Brecker**.
Novel use of aortic valve IVUS to guide TAVI.
Presented at EuroPCR , Paris, France, May 2013. *EuroIntervention* 2013; Abstracts of EuroPCR 2013 :133.

P Wenaweser, S Bleiziffer, U Gerckens, **S Brecker**, C Tamborino, J Bosmans, A Linke.
Impact of conduction disturbances post TAVI in real world patients: one year outcomes – the ADVANCE study.
Presented at EuroPCR , Paris, France, May 2013. *EuroIntervention* 2013; Abstracts of EuroPCR 2013 :147.

J Bosmans, S Bleiziffer, U Gerckens, P Wenaweser, **S Brecker**, C Tamborino, A Linke.
Neurological events one year post TAVI in real world patients: the ADVANCE study.
Presented at EuroPCR , Paris, France, May 2013. *EuroIntervention* 2013; Abstracts of EuroPCR 2013 :152.

D Roy, P Bhamra-Ariza, **S Brecker**.
Novel use of aortic valve IVUS to guide valve sizing in TAVI.
Presented at the 61st Annual Scientific Meeting of the Cardiac Society of Australia and New Zealand, Gold Coast, Australia, August 2013. *Heart, Lung and Circulation* 2013;**22**:S144-S145.

A Linke, S Bleiziffer, J Bosmans, U Gerckens, P Wenaweser, **S Brecker**, C Tamborino.
Predictors of mortality following CoreValve transcatheter aortic valve implantation: results from the ADVANCE study.
Presented at the 2013 Congress of the European Society of Cardiology, Amsterdam, The Netherlands, August 2013. *European Heart Journal* 2013;34(Suppl 1):483.

D Roy, M Zakkar, A Alassar, J-C Laborde, M Jahangiri, **S Brecker.**
Direct aortic access TAVI: experience and outcomes from a single centre.
Presented at PCR London Valves, London, England, September 2013. *PCR London Valves Programme* 2013. *e-Abstract.*

S Bleiziffer, J Webb, R Lange, M Napodano, S Kodali, D Hildick-Smith, D Himbert, U Schaefer, J Rodes-Cabeau, H Treede, M Barbanti, **S Brecker**, A Latib, J-C Laborde, R Kornowski, D Dvir.
Patient-prosthesis mismatch after aortic valve-in-valve implantation: Insights from the Global Valve-in-Valve registry.
Presented at the 25th Annual Symposium of Transcatheter Cardiovascular Therapeutics, San Francisco, USA, October 2013. *Journal of the American College of Cardiology* 2013; **62**(18)(Suppl B):B38.

G Bruschi, H Amrane, M Bhabra, J Bosmans, M Branny, **S Brecker**, H Bushnaq, B Chevalier, G Coletti, H Danenberg, O Dapunt, F De Marco, P den Heijer, F Ettori, R Lange, B Marcheix, D Mazzitelli, N Moat, T Modine, D Roy, D Tchetche, U Trivedi.
European multi-center experience with direct aortic transcatheter aortic valve implantation with a self-expandable valve.
Presented at the 25th Annual Symposium of Transcatheter Cardiovascular Therapeutics, San Francisco, USA, October 2013. *Journal of the American College of Cardiology* 2013; **62**(18)(Suppl B):B39.

S Brecker, S Mealing, A Padhiar, J N Eaton, M Sculpher, R Busca, J Bosmans, U J Gerckens, P Wenaweser, C Tamburino, S Bleiziffer, N Piazza, N Moat, A Linke.
Transcatheter aortic valve implantation with CoreValve for the treatment of severe aortic stenosis: Results from a UK perspective cost-effectiveness analysis using 12 month data from the ADVANCE Study.
Presented at the 25th Annual Symposium of Transcatheter Cardiovascular Therapeutics, San Francisco, USA, October 2013. *Journal of the American College of Cardiology* 2013; **62**(18)(Suppl B):B218.

D Dvir, R Kornowski, S Kodali, S Bleiziffer, D Hildick-Smith, D Himbert, U Schaefer, J Rodes-Cabeau, H Treede, **S Brecker**, A Latib, J-C Laborde, J Webb.
Correlates for device malposition during aortic valve-in-valve implantation: Insights from the Global Valve-in-Valve Registry.
Presented at the 25th Annual Symposium of Transcatheter Cardiovascular Therapeutics, San Francisco, USA, October 2013. *Journal of the American College of Cardiology* 2013; **62**(18)(Suppl B):B231.

D Roy, M Jahangiri, R Sharma, **S Brecker**.
Novel use of aortic valve IVUS to guide transcatheter aortic valve implantation.
Presented at the 25th Annual Symposium of Transcatheter Cardiovascular Therapeutics, San Francisco, USA, October 2013. *Journal of the American College of Cardiology* 2013; **62**(18)(Suppl B):B234.

M Barreiro Perez, M Lopez Perez, D Roy, **S Brecker**, R Sharma.
The relationship between prognosis and left ventricular remodelling pattern before and after transcatheter aortic valve implantation.
Presented at EuroEcho 2013, The 17th Annual Meeting of The European Association of Echocardiography, Istanbul, Turkey, December 2013. *European Heart Journal Cardiovascular Imaging* 2013;**14**(Suppl 2):ii218-ii219.

A Alassar, G Soppa, M Edsell, P Rich, D Roy, I Chis Ster, R Joyce, O Valencia, T Barrick, F Howe, R Morris, N Moat, H Markus, **S Brecker**, M Jahangiri.
Incidence and mechanisms of cerebral ischemia following transcatheter aortic valve implantation compared with surgical aortic valve replacement.
Annual Meeting Society for Cardiothoracic Surgery in Great Britain and Ireland, Edinburgh, Scotland, March 2014.

J Bosmans, S Bleiziffer, U Gerckens, P Wenaweser, **S Brecker**, C Tamborino, A Linke.
Neurological events two years post TAVI in real world patients – The Advance study.
Presented at EuroPCR , Paris, France, May 2014. *EuroIntervention* 2014; Abstracts of EuroPCR 2014 :174.

G Bruschi, B Chevalier, A Hafid, N Moat, M Branny, G Coletti, O Dapunt, **S Brecker**, J Bosmans, R Lange, D Tchetche, T Modine, B Marcheix, M Bhabra, U Trivedy, H Danenberg, P Den Heijer, C Lettieri, S Klugmann, A van Boven, P Branny, F Ettori, D Roy, D Mazzitelli, H Bushnaq.
EURyDICE Registry: EURopean DIrect Aortic Corevalve Experience.
Presented at EuroPCR , Paris, France, May 2014. *EuroIntervention* 2014; Abstracts of EuroPCR 2014 :178.

D Dvir, R Kornowski, S Kodali, S Bleiziffer, D Himbert, D Hildick-Smith, U Schaefer, H Treede, **S Brecker**, A Latib, J-C Laborde, J Webb.
Aortic valve-in-valve implantation inside stented versus stentless bioprostheses: insights from the Global Valve-in-Valve registry. Presented at EuroPCR , Paris, France, May 2014.
EuroIntervention 2014; Abstracts of EuroPCR 2014 :212.

M S Santos, J Webb, R Kornowski, S Bleiziffer, D Hildick-Smith, D Himbert, H Treede, **S Brecker**, A Latib, D Dvir.
Aortic valve-in-valve implantation inside stented vs. stentless bioprostheses: Insights from the Global Valve-in-Valve Registry.
Presented at the 26th Annual Symposium of Transcatheter Cardiovascular Therapeutics, Washington DC, USA, September 2014. *Journal of the American College of Cardiology* 2014; **64**(11)(Suppl B):B205.

M S Santos, J Webb, R Kornowski, A Latib, S Bleiziffer, R Bader, M Abdel-Wahab, **S Brecker**, J M Hernadnez-Garcia, T Miyazaki, D Hildick-Smith, D Dvir.
Multicenter assessment of TAVR in failed aortic bioprostheses: Evaluation of implantation depth and association with elevated post-procedural gradients in SAPIEN vs. CoreValve valve-in-valve implantation.
Presented at the 26th Annual Symposium of Transcatheter Cardiovascular Therapeutics, Washington DC, USA, September 2014. *Journal of the American College of Cardiology* 2014; **64**(11)(Suppl B):B206.

I T Meredith, T Walton, **S Brecker**, S Pasupati, D Blackman, G Manoharan.
Early results from the CoreValve Evolut R Study.
Presented at the 64th Annual Scientific Sessions of the American College of Cardiology, San Diego, USA, March 2015. *Journal of the American College of Cardiology* 2015; **65**(Suppl A):A432.

N M Van Mieghem, U Gerckens, T Modine, **S Brecker**, V Bapat, S Bleiziffer, M Abdel-Wahab, A Linke, D Blackman, J Wöhrle, D Hildick-Smith, Ø Bleie, D J Allocco, K D Dawkins, V Falk.
First report from the RESPOND study: post-market evaluation of a fully repositionable and retrievable aortic valve in 250 patients treated in routine clinical practice.
Presented at EuroPCR , Paris, France, May 2015. *EuroIntervention* 2015; Abstracts of EuroPCR 2015 :162.

S Bleiziffer, J Bosmans, U Gerckens, P Wenaweser, **S Brecker**, C Tamburino, A Linke.
Three-year clinical and echocardiographic follow-up of aortic stenosis patients implanted with a self-expanding bioprosthesis.
Presented at EuroPCR , Paris, France, May 2015. *EuroIntervention* 2015; Abstracts of EuroPCR 2015 :167.

M Simonato, J Webb, R Kornowski, A Latib, J-C Laborde, S Bleizifferm R Bader, M Abdel-Wahab, **S Brecker**, J-M Hernandez, D Hildick-Smith, D Dvir.
Multicenter assessment of TAVR in failed bioprostheses: implantation depth and elevated post-procedure gradients in SAPIEN vs. CoreValve valve-in-valve implantation.
Presented at EuroPCR , Paris, France, May 2015. *EuroIntervention* 2015; Abstracts of EuroPCR 2015 :181.

M S Rahman, R Sharma, **S J D Brecker**.
Transcatheter aortic valve implantation in patients with pre-existing chronic kidney disease.
Presented at the British Cardiovascular Society Annual Conference, Manchester, England, June 2015.
Heart 2015; **101**(Suppl 4):A52.

M Barbanti, U Gerckens, S Bleiziffer, J Bosmans, P Wenaweser, **S Brecker**, C Tamborino, A Linke.
Three-year outcomes of transcatheter aortic valve implantation in patients with STS score less than or equal to 7%: a comparative analysis between different risk strata from the ADVANCE study.
Presented at the 2015 Congress of the European Society of Cardiology, London, United Kingdom, August-September 2015. *European Heart Journal* 2015;36(Suppl 1):1131.

I Meredith, A Walton, **S Brecker**, S Pasupati, D Blackman, G Manoharan.
Early results following transcatheter aortic valve implantation with a repositionable self-expanding bioprosthesis.
Presented at the 63rd Annual Scientific Meeting of the Cardiac Society of Australia and New Zealand, Auckland, New Zealand, June 2015. *Heart, Lung and Circulation* 2015;**24**:S381.

V Folk, T Modine, **S Brecker**, V Bapat, U Gerckens, P Wenaweser, K E Hauptmann, F Bedogni, M Laine, N Werner, P Boekstegers, A S Petronio, S Kische, D J Allocco, K D Dawkins, N M Van Mieghem.
Post-market evaluation of a fully repositionable and retrievable aortic valve in 500 patients treated in routine clinical practice: interim results from the RESPOND study.
Presented at PCR London Valves, Berlin, Germany, September 2015. *PCR London Valves Programme* 2015. *e-Abstract.*

G Manoharan, A Walton, **S Brecker**, S Pasupati, D J Blackman, I T Meredith.
Clinical Outcomes at 1 Year with a Repositionable Self-Expanding Transcatheter Aortic Valve.
Presented at the 27th Annual Symposium of Transcatheter Cardiovascular Therapeutics, San Francisco, USA, October 2015. *Journal of the American College of Cardiology.* 2015; **66**(15)(Suppl B):B45-6.

G Bruschi, H Amrane, B Chevalier, G Coletti, P Branny, D Mazzitelli, N Moat, T Modine, J M Bosmans, **S Brecker**, M Horst, D Tchetche, N Bouboulis, S Khogali, B Marcheix, U Trivedi, H Danenberg, P den Heijer, C Lettieri, F De Marco, A J van Boven, C Fiorina, M Branny, R Lange, S Firoozi, K Spargias, F Della Rosa, N Dumonteil, D Hildick-Smith, A Elami, V Fiorani, O Dapunt, H Bushnaq.
EURYDICE Registry: European Direct Aortic CoreValve Experience.
Presented at the 27th Annual Symposium of Transcatheter Cardiovascular Therapeutics, San Francisco, USA, October 2015. *Journal of the American College of Cardiology.* 2015; **66**(15)(Suppl B):B54.

S Bleiziffer, J Webb, R Kornowski, D M Holzhey, M S Santos, I George, J-M Sinning, M Napodano, L Nombela-Franco, M Guerrero, H Nissen, T Rudolph, **S Brecker**, A Shah, P Petursson, A Giuseppe Cerillo, S Chandran, N Moat, D F Gaia, S-J Park, N Bonaros, R Bekeredjian, R Lange, D Dvir.
Prosthesis-Patient Mismatch after Aortic Valve-In-Valve Implantation: Insights from the Valve-in-Valve International Data (VIVID) Registry.
Presented at the 27th Annual Symposium of Transcatheter Cardiovascular Therapeutics, San Francisco, USA, October 2015. *Journal of the American College of Cardiology*. 2015; **66**(15)(Suppl B):B62.

S S Kalra, S Firoozi, D Blackman, S Rashid, S Davies, N Moat, J Yeh, M Dalby, T Kabir, S S Khogali, R A Anderson, P H Groves, D Mylotte, D Hildick-Smith, R Rampat, J Kovac, A Gunarathne, J-C Laborde, **S J Brecker**.
Initial experience of a second-generation self-expanding transcatheter aortic valve: the United Kingdom and Ireland IMPLANTERS Registry.
Presented at EuroPCR , Paris, France, May 2016. *EuroIntervention* 2016; Abstracts of EuroPCR 2016 :326.

M Simonato, P Pibarot, T Rudolph, M Spence, S Alnasser, M Barbanti, N Moat, M Mennuni, A Iadanza, H Amrane, W-K Kim, E Horlick, A Shah, Z Lim, **S Brecker**, A Linke, A Finkelstein, K Spargias, J-M Hernandez, A Latib, T Lefevre, C Frerker, G Bruschi, D Dvir.
Severe predicted patient-prosthesis mismatch as a predictor of long-term mortality after aortic valve-in-valve: insights from the Valve-in-Valve International Data registry (VIVID)
Presented at EuroPCR , Paris, France, May 2016. *EuroIntervention* 2016; Abstracts of EuroPCR 2016 :351.

S Brecker, S Bleiziffer, J Bosmans, U Gerckens, P Wenaweser, C Tamburino, A Linke.
Four-year clinical and echocardiographic follow-up of aortic stenosis patients implanted with a self-expanding bioprosthesis
Presented at EuroPCR , Paris, France, May 2016. *EuroIntervention* 2016; Abstracts of EuroPCR 2016 :421.

J Michel, C Pellegrini, T Rheude, T Trenkwalder, P Mayr, M Kasel, **S Brecker**, A Kastrati, O Husser, C Hengstenburg.
Unilateral carotid artery occlusion is associated with higher stroke rate after TAVI.
Presented at the 2016 Congress of the European Society of Cardiology, Rome, Italy, August-September 2016. *European Heart Journal* 2016;**37**(Suppl 1):69.

S Alnasser, A Cheema, E Horlick, N Van Mieghem, G Feuchtner, M Simonato dos Santos, T Rudolph, **S Brecker**, P Lemos, N Piazza, A Damonte, M Kass, G Veress, J Mehilli, R Bekeredjian, J McCabe, A Linke, F Woitek, L Sondergard, N Bonaros, O De Backer, S Ensminger, H Baumbach, J Wöhrle, J Schofer, M Pelletier, J Webb, D Dvir.
Optimal transcatheter heart valve sizing in aortic valve in valve implantation: Insights from the Valve in Valve International Data (VIVID) Registry.
Presented at the 28th Annual Symposium of Transcatheter Cardiovascular Therapeutics, Washington DC, USA, October - November 2016. *Journal of the American College of Cardiology.* 2016;**68**(18)(Suppl B):B271.

C Dowling, J-C Laborde, R Sharma, S Firoozi, R Das, P Holt, **S Brecker**.
Sinotubular junction anatomy: an important metric to consider when planning for transcatheter aortic valve replacement.
Presented at the 28th Annual Symposium of Transcatheter Cardiovascular Therapeutics, Washington DC, USA, October - November 2016. *Journal of the American College of Cardiology.* 2016;**68**(18)(Suppl B):B278.

I Meredith, **S Brecker**, S Pasupati, D Blackman, T Walton, G Manoharan.
Longest follow-up after implantation of a self-expanding repositionable transcatheter aortic valve.
Presented at the 28th Annual Symposium of Transcatheter Cardiovascular Therapeutics, Washington DC, USA, October - November 2016. *Journal of the American College of Cardiology.* 2016;**68**(18)(Suppl B):B302-303.

C Dowling, S Firoozi, J De Bruin, J-C Laborde, R Sharma, R Das, **S Brecker**.
Coronary ostia height: implications for percutaneous coronary access following TAVI.
Presented at EuroPCR , Paris, France, May 2017. *EuroIntervention* 2017; Abstracts of EuroPCR 2017:480.

U Gerckens, C Tamborino, S Bleiziffer, J Bosmans, P Wenaweser, **S Brecker,** A Linke.
Final five-year clinical and echocardiographic results of treatment for severe aortic stenosis with a self-expanding bioprosthesis.
Presented at EuroPCR , Paris, France, May 2017. *EuroIntervention* 2017; Abstracts of EuroPCR 2016 :520.

P Pibarot, M Barbanti, T Rudolph, M Spense, M Simonato, N Moat, M Mennuni, A Adanza, H Amrane, W-K Kim, **S Brecker**, A Linke, A Finkelstein, K Spargias, J-M Hernandez, A Latib, D Dvir.
Prosthesis-patient mismatch of surgical valves significantly impacts survival follwing aortic valve-in-valve implantation.
Presented at EuroPCR , Paris, France, May 2017. *EuroIntervention* 2017; Abstracts of EuroPCR 2017:955.

C Dowling, **S Brecker.**
Transfemoral TAVI or surgery for intermediate-risk patients: a meta-analysis of randomised trials.
Presented at PCR London Valves, London, UK, September 2017. Abstracts of PCR London Valves 2017.

S Brecker, N M Van Mieghem, J Wöhrle, D Hildick-Smith, D J Blackman, S Bleiziffer, A Linke, T Modine, D J Allocco, I T Meredith, V Falk.
Impact of baseline STS score on clinical outcomes following treatment with a retrievable and fully repositionable aortic valve in the RESPOND post-market study.
Presented at PCR London Valves, London, UK, September 2017. Abstracts of PCR London Valves 2017.

D Blackman, D Hildick-Smith, P Maccarthy, **S Brecker**, S Dorman, S Hoole, A Banning, S Khogali, P Ludman, D Roberts, C Malkin, C Dowling, J Parker, O Aldalati, J Tay, B Moreby, A Khurana.
Long-term valve function 5-9 years after transcatheter aortic valve implantation: data from the UK-TAVI Registry. On behalf of the National Institute for Cardiovascular Outcomes Research (NICOR).
Presented at the 29th Annual Symposium of Transcatheter Cardiovascular Therapeutics, Denver, USA, October 2017. *Journal of the American College of Cardiology.* 2017; **70**(18)(Suppl B):B21.

M Simonato dos Santos, P Pibarot, M Barbanti, A Linke, R Kornowski, T Rudolph, G Aldea, M Mennuni, A Iadanza, H Amrane, D Gaia, W Kim, M Napodano, H Baumbach, A Finkelstein, J Kobayashi, **S Brecker**, C Don, A Cerillo, A Unbehaun, D Attias, M Nejjari, N Jones, D Tchetche, R Philippart, K Spargias, J M Hernandez, A Latib, D Dvir.
Impact of pre-existent prosthesis-patient mismatch on survival following aortic valve-in-valve procedures.
Presented at the 29th Annual Symposium of Transcatheter Cardiovascular Therapeutics, Denver, USA, October 2017. *Journal of the American College of Cardiology.* 2017; **70**(18)(Suppl B):B69.

L Van Gils, J Wöhrle, D Hildick-Smith, S Bleiziffer, D Blackman, M Abdel-Wahab, U Gerckens, **S Brecker**, V Bapat, T Modine, O Soliman, A Nersesov, D Allocco, V Falk, N Van Mieghem.
Importance of contrast aortography with Lotus transcatheter aortic valve replacement – a post hoc analysis from the RESPOND Post-market Study.
Presented at the 29th Annual Symposium of Transcatheter Cardiovascular Therapeutics, Denver, USA, October 2017. *Journal of the American College of Cardiology.* 2017; **70**(18)(Suppl B):B125.

C Dowling, S Firoozi, N Doyle, M Spence, G Manoharan, C Owens, M Kashyap, T Kabir, V Panoulas, M Dalby, D Mylotte, A Neylon, N Martin, D Roberts, R More, A Wiper, H Abdelaziz, E Grech, I Hall, M Neville, R Rampat, D Hildick-Smith, M Mullen, S Kennon, P Chandrala, R A Anderson, T Rajathurai, L Tapp, L Deegan, S Doshi, J Kovac, K Kontoprias, **S Brecker**.
Initial experience of the Medtronic 34mm Evolut R Valve: The UK & Ireland Implanter's Registry..
Presented at the 29th Annual Symposium of Transcatheter Cardiovascular Therapeutics, Denver, USA, October 2017. *Journal of the American College of Cardiology.* 2017; **70**(18)(Suppl B):B263.

S Carlton-Carew , C Dowling, **S J Brecker**, R Kanagasaby .
Risk profiles and outcomes of patients undergoing surgical aortic valve replacement and transcatheter aortic valve implantation: a single centre experience.
Presented at the Annual Meeting of Society for Cardiothoracic Surgery, Glasgow, United Kingdom, March 2018.

C Dowling, S R K Seshasai, S Firoozi, N Doyle, V Chandrasekharan, **S Brecker**.
TAVI versus surgery for severe symptomatic aortic stenosis: a reconstructed individual patient data meta-analysis.
Presented at EuroPCR , Paris, France, May 2018. *EuroIntervention* 2018; Abstracts of EuroPCR 2018.

C Dowling, A Bravo, P Mortier, P Ruile, N El Faquir, P de Jaegere, O De Backer, L Sondergaard, H McConkey, R Rajani, D Mylotte, J-C Laborde, **S J Brecker**.
Patient-specific computer simulation of transcatheter aortic valve implantation in bicuspid aortic valve morphology.
Presented at EuroPCR , Paris, France, May 2018. *EuroIntervention* 2018; Abstracts of EuroPCR 2018.

C Dowling, J-C Laborde, S Firoozi, R Das, N Doyle, R Sharma, **S J Brecker**.
Leaflet sealing with self-expanding transcatheter heart valve prostheses.
Presented at EuroPCR , Paris, France, May 2018. *EuroIntervention* 2018; Abstracts of EuroPCR 2018.

C Dowling, S Firoozi, N Doyle, D Blackman, CJ Malkin, MS Cunnington, S Saraf, MS Spence, G Manorharan, C Owens, P Brennan, R Anderson, **S J Brecker**.
Initial experience of a self-expanding transcatheter heart valve with an external tissue wrap: The UK & Ireland Implanters' registry.
Presented at EuroPCR , Paris, France, May 2018. *EuroIntervention* 2018; Abstracts of EuroPCR 2018.

C Dowling, A Bavo, P Mortier, N El Faquir, P de Jaegere, O de Backer, L Søndergaard, P Ruile, D Mylotte, H McConkey, R Rajani, J-C Laborde, **S Brecker**.
Patient-specific computer simulation to optimise transcatheter heart valve sizing and positioning in bicuspid aortic valve morphology.
Presented at the 30th Annual Symposium of Transcatheter Cardiovascular Therapeutics, San Diego, USA, September 2018. *Journal of the American College of Cardiology*. 2018; **72**(13)(Suppl B):B167.

N S Kleiman, J J Popma, S J Chetchuti, P W Serruys, N M Van Mieghem, R C Stoler, J K Harrison, **S J Brecker**.
Coronary intervention after self-expanding transcatheter or surgical aortic valve replacement in the SURTAVI Trial.
Presented at Cardiovascualer Research Technologies CRT19, Washington, DC, March 2019. *Journal of the American College of Cardiology Cardiovascular Interventions* 2019.**12**(4) Suppl S:543.

C Dowling, S Firoozi, **S Brecker**.
First-in-human experience with patient-specific computer simulation of TAVI in bicuspid aortic valve morphology.
Presented at EuroPCR , Paris, France, May 2019. *EuroIntervention* 2019; Abstracts of EuroPCR 2019.

C Dowling, S Firoozi, **SJ Brecker**.
Early experience with patient-specific computer simulation of transcatheter aortic valve implantation in bicuspid aortic valve morphology.
Presented at CSI, Frankfurt, Germany, June 2019.

C Dowling, AM Bavo, N El Faquir, P Mortier, P de Jaegere, O de Backer, L Søndergaard, P Ruile, D Mylotte, H McConkey, R Rajani, J Laborde, **SJ Brecker**.
Patient-specific computer simulation of transcatheter heart valve implantation in bicuspid aortic valve morphology.
Presented at the 67th Annual Scientific Meeting of the Cardiac Society of Australia and New Zealand, Adelaide, Australia, August 2019. *Heart, Lung and Circulation* 2019;**28**:S261.

C Dowling, P Astudillo, **S Brecker**, M De Beule, P Mortier, J Dambre.
Classification of aortic valve morphology using a three-dimensional convolutional neural network.
Presented at PCR London Valves 2019, London, UK, November 2019.
Abstracts of PCR London Valves 2019.

C Dowling, S Firoozi, **S J Brecker**.
Patient-specific computer simulation to predict long-term outcomes after transcatheter aortic valve replacement.
Presented at the Annual Scientific Sessions of the American College of Cardiology & World Congress of Cardiology, ACC20/WCC, USA, March 2020. *Journal of the American College of Cardiology* 2020; **75**(11 Suppl 1):1713.

C Dowling, R Gooley, L McCormick, S Firoozi, **S J Brecker**.
Ongoing experience with patient-sepcific computer simulation of transcatheter aortic valve replacement in bicuspid aortic valve.
Presented at TCT Connect October 2020. *Journal of the American College of Cardiology*. 2020; **76**(17)(Suppl B):B53.

C Dowling, R Gooley, L McCormick, S Firoozi, **S Brecker**.
Patient-specific computer simulation to predict long-term outcomes after TAVI.
Presented at PCR Valves e-Course; November 2020.

C Dowling, R Gooley, L McCormick, S Firoozi, **S Brecker**.
Ongoing experience with patient-specific computer simulation of TAVI in bicuspid aortic valve.
Presented at PCR Valves e-Course; November 2020.

C Dowling, R Gooley, L McCormick, S Firoozi, **S Brecker**.
Patient-specific computer simulation to predict long-term outcomes after TAVI.
Presented at EuroPCR 2021, Paris, France, May 2021. *EuroIntervention* 2021; Abstracts of EuroPCR 2018.

C Dowling, R Gooley, L McCormick, S Firoozi, **S Brecker**.
Patient-Specific Computer Simulation to Predict Long-term Outcomes After Transcatheter Aortic Valve Implantation.
Presented at 69th Annual Scientific Meeting of the Cardiac Society of Australia and New Zealand / 45th Annual Scientific Meeting of the International Society for Heart Research ANZET 21, Adelaide, Australia, August 2021. *Heart, Lung and Circulation* 2021;**30 suppl 3**:S201.
C Dowling, A Bavo, N El Faquir, P Mortier, P de Jaegere, O De Backer, L Sondergaard, P Ruile, D Mylotte, H McConkey, R Rajani, J Laborde **S Brecker**.
Patient-Specific Computer Simulation of Transcatheter Aortic Valve Implantation in Bicuspid Aortic Valve Morphology
Presented at 69th Annual Scientific Meeting of the Cardiac Society of Australia and New Zealand, / 45th Annual Scientific Meeting of the International Society for Heart Research ANZET 21, Adelaide, Australia, August 2021. *Heart, Lung and Circulation* 2021;**30 suppl 3**:S261.

C Dowling, R. Gooley, L McCormick, **S Brecker**, S Firoozi, V Bapat, S Kodali, O Khalique, J Brouwer, M Swaans.
Patient-Specific Computer Simulation to Optimise Transcatheter Heart Valve Sizing and Positioning in Bicuspid Aortic Valve.
Presented at 69th Annual Scientific Meeting of the Cardiac Society of Australia and New Zealand, / 45th Annual Scientific Meeting of the International Society for Heart Research ANZET 21, Adelaide, Australia, August 2021. *Heart, Lung and Circulation* 2021;**30 suppl 3**:S317.

C Dowling, R Gooley, L McCormick, H N Rashid, J Dargan, F Khan, S Firoozi, **S J Brecker**.
Patient-specific computer simulation to predict the development of conduction disturbance after transcatheter aortic valve replacement.
Presented at the 33rd Annual Symposium of Transcatheter Cardiovascular Therapeutics, Orlando, USA, November 2021. *Journal of the American College of Cardiology.* 2021; **78**(19)(Suppl B):B79.

C Dowling, R Gooley, L McCormick, S Firoozi, **S Brecker**.
Patient-specific computer simulation to predict long-term outcomes after transcatheter aortic valve implantation.
Presented at CSI Frankfurt 2022; Frankfurt, Germany. June 2022.

C Dowling, S Firoozi, **S Brecker**.
Ongoing experience with patient-specific computer simulation of transcatheter aortic valve implantation in bicuspid aortic valve.
Presented at CSI Frankfurt 2022; Frankfurt, Germany. June 2022.

J Dargan, S Banisadr, F Khan, S Firoozi, C Dowling, **S Brecker**.
Comparison Between Patient-Specific Computer Simulation and Valve-Sizing Algorithms in Bicuspid Transcatheter Aortic Valve Replacement: A Retrospective Study.
Presented at the 34th Annual Symposium of Transcatheter Cardiovascular Therapeutics, Boston, USA, September 2022. *Journal of the American College of Cardiology*. 2022; **80**(12)(Suppl B):B198.

J Dargan J, G Rocatello, F Khan, S Firoozi, C Dowling, **S Brecker**.
Predict TAVI bicuspid aortic valve re-access : Patient-specific computer modelling to predict anatomical risk factors preventing post TAVI coronary re-access in bicuspid aortic valve.
Presented at PCR London Valves, London, UK. November 2022. *PCR London Valves Abstract book. E-Abstract.*
https://eposter.europa-organisation.com/2022/pcrlondon/index/slide/abstract/56?slide=false

N Ali, M Spence, D Hildick-Smith, P MacCarthy, **S Brecker**, S Hoole, S Dorman, S Doshi, A Wiper, D Blackman.
Long-term durability of self-expanding and balloon-expandable transcatheter aortic valve prostheses.
Presented at PCR London Valves, London, UK, November 2022. *PCR London Valves Abstract book. E-Abstract.*

J Dargan, S Banisadr, F Khan, S Firoozi, C Dowling, **SJ Brecker**.
Patient-specific computer simulation and valve-sizing methods in bicuspid TAVI.
Presented at EuroPCR 2023, Paris, France, May 2023. *EuroIntervention* 2023; Abstracts of EuroPCR 2023.
https://eposter.europa-organisation.com/2023/europcr/index/slide/abstract/51

J Dargan, **S Brecker**, S Firoozi S, O Rees, F Khan.
Access to transcatheter aortic valve implantation (TAVI) and ethnicity. A review of UK and local data.
Presented at the British Cardiovascular Society Annual Conference, Manchester, UK, June 2023. *Heart* 2023;109(suppl 3):A14-A15.

J Dargan, G Rocatello, Y Weng, F Khan, S Firoozi, C Dowling, **S Brecker**.
Predict TAVI BAV Re-access: Patient-specific computer modelling to predict anatomical risk factors preventing post transcatheter aortic valve implantation coronary re-access in bicuspid aortic valve.
Presented at the European Society of Cardiology Congress, Amsterdam, The Netherlands, August 2023. *European Heart Journal* 2023; In press.

EXHIBIT B

Dr. Stephen Brecker: Expert witness work since 2018

2018 Boston v Edwards USA

2018 Abbott v Edwards UK

2020 Edwards v Meril UK

2020 Medtronic v Teleflex USA

2021 Medtronic v Teleflex USA

2022 Aortic Innovations v Edwards USA

2022 White Swell v Abiomed USA

2023 Aortic Innovations v Edwards USA

2023 Speyside v Medtronic

CERTIFICATE OF SERVICE

The undersigned hereby certifies that on October 27, 2023, a copy of the foregoing document was served on the persons listed below in the manner indicated:

BY EMAIL

Brian P. Egan
Anthony D. Raucci
MORRIS, NICHOLS, ARSHT
& TUNNELL LLP
1201 North Market Street
Wilmington, DE 19801
began@morrisnichols.com
araucci@morrisnichols.com

Mark Vorder-Bruegge, Jr.
Matthew M. Lubozynski
WYATT, TARRANT & COMBS, LLP
6070 Poplar Ave., Suite 300
Memphis, TN 38119
mvb@wyattfirm.com
mlubozynski@wyattfirm.com

Attorneys for Defendants Edwards Lifesciences Corporation, Edwards Lifesciences LLC and Edwards Lifesciences (U.S.) Inc.

John B. Sganga, Jr.
Craig S. Summers
Christy G. Lea
Joshua J. Stowell
Brian C. Barnes
KNOBBE MARTENS
2040 Main St., 14 Floor
Irvine, CA 92614
john.sganga@knobbe.com
craig.summers@knobbe.com
Christy.Lea@knobbe.com
joshua.stowell@knobbe.com
brian.barnes@knobbe.com

Brian C. Horne
KNOBBE MARTENS
1925 Century Park East, Suite 600
Los Angeles, CA 90067
brian.horne@knobbe.com

LitEWLIFL.028L@knobbe.com

Attorneys for Defendants Edwards Lifesciences Corporation, Edwards Lifesciences LLC and Edwards Lifesciences (U.S.) Inc.

YOUNG CONAWAY STARGATT
& TAYLOR, LLP

/s/ Robert M. Vrana
Adam W. Poff (No. 3990)
Robert M. Vrana (No. 5666)
Rodney Square
1000 North King Street
Wilmington, DE 19801
(302) 571-6600
apoff@ycst.com
rvrana@ycst.com
Attorneys for Plaintiff Aortic Innovations, LLC