Trials@uspto.gov
571-272-7822

Paper 11
Entered: December 21, 2023

UNITED STATES PATENT AND TRADEMARK OFFICE

BEFORE THE PATENT TRIAL AND APPEAL BOARD

LG ELECTRONICS INC.,
Petitioner,

v.

JAWBONE INNOVATIONS, LLC,
Patent Owner.

IPR2023-01154
Patent 8,019,091 B2

Before GEORGIANNA W. BRADEN, NORMAN H. BEAMER, and JASON M. REPKO, *Administrative Patent Judges.*

REPKO, *Administrative Patent Judge*.

DECISION
Granting Institution of *Inter Partes* Review
35 U.S.C. § 314
Dismissing Motion for Joinder
35 U.S.C. § 315(c); 37 C.F.R. § 42.122

I. INTRODUCTION

LG Electronics Inc. ("Petitioner") filed a petition requesting *inter partes* review of claims 1–20 of U.S. Patent No. 8,019,091 B2 (Ex. 1001, "the '091 patent"). Paper 2 ("Pet." or "Petition"). Jawbone Innovations, LLC ("Patent Owner") filed a Preliminary Response. Paper 10 ("Prelim. Resp.").

Petitioner also filed a Motion for Joinder (Paper 3), requesting joinder as a petitioner in IPR2023-00253.[1] On August 10, 2023, the Board terminated IPR2023-00253 (Paper 14). Thus, Petitioner's request to join that proceeding as a party under 35 U.S.C. § 315(c) is dismissed as moot.

To institute an *inter partes* review, we must determine "that there is a reasonable likelihood that the petitioner would prevail with respect to at least 1 of the claims challenged in the petition." 35 U.S.C. § 314(a) (2018). For the reasons discussed in this Decision, Petitioner has shown a reasonable likelihood that it would prevail with respect to at least one claim challenged in the Petition, and we have not been provided a sufficient reason to exercise our discretion to deny institution. Thus, we institute an *inter partes* review.

A. Related Matters

The parties identify the following related matters: *Jawbone Innovations, LLC v. Amazon.com, Inc.*, No. 5:22-cv-06727-TLT (N.D. Cal. Nov. 29, 2021), *Jawbone Innovations, LLC v. Amazon.com, Inc. and Amazon.com Services, Inc.*, No. 3:22-cv-06727-TLT (N.D. Cal.), *Jawbone Innovations, LLC v. Samsung Elecs.*, No. 2:21-cv-00186-JRG (E.D. Tex. May 27, 2021), *Jawbone Innovations, LLC v. Apple Inc.*, No. 6:21-cv-00984-ADA (W.D. Tex. Sept. 23, 2021), *Jawbone Innovations, LLC v.*

[1] Patent Owner filed an Opposition to Petitioner's Motion for Joinder (Paper 7), and Petitioner filed a Reply to the Opposition (Paper 9).

Google LLC, No. 6:21-cv-00985-ADA (W.D. Tex. Sept. 23, 2021), *Jawbone Innovations, LLC v. LG Electronics Inc.*, No. 2:23-cv-00078 (E.D. Tex. Feb. 28, 2023), *Jawbone Innovations, LLC v. Amazon.com, Inc.*, No. 2:21-cv-00435 (E.D. Tex. Nov. 29, 2021), *Jawbone Innovations, LLC v. Sony Electronics, Inc.*, No. 2:23-cv-01161-MEF-LDW (D.N.J. Feb. 28, 2023), *Jawbone Innovations, LLC v. HTC Corporation*, No. 2:23-cv-00077 (E.D. Tex. Feb. 28, 2023), *Jawbone Innovations, LLC v. Guangdong OPPO Mobile Telecommunications Corp., Ltd., d/b/a OPPO*, No. 2:23-cv-00079 (E.D. Tex. Feb. 28, 2023), *Jawbone Innovations, LLC v. Panasonic Holdings Corporation*, No. 2:23-cv-00081 (E.D. Tex. Feb. 28, 2023), *Jawbone Innovations, LLC v. ZTE Corporation*, No. 2:23-cv-00082 (E.D. Tex. Feb. 28, 2023), *Jawbone Innovations, LLC v. Meta Platforms, Inc. d/b/a Meta*, No. 6:23-cv-00158 (W.D. Tex. Feb. 28, 2023), *Jawbone Innovations, LLC v. Google LLC*, No. 3:23-cv-00466 (N.D. Cal. Feb. 1, 2023), *Apple Inc. v. Jawbone Innovations, LLC*, IPR2022-01147 (PTAB June 16, 2022), *Google LLC v. Jawbone Innovations, LLC*, IPR2022-00649 (PTAB Mar. 15, 2022), *Amazon.com, Inc. v. Jawbone Innovations, LLC*, IPR2023-00253 (PTAB Nov. 22, 2022), *Meta Platforms, Inc. v. Jawbone Innovations, LLC*, IPR2023-01127 (PTAB June 27, 2023), and *Sony Electronics Inc. v. Jawbone Innovations, LLC*, IPR2023-01166 (PTAB July 5, 2023). Pet. 75–77; Paper 6, 2–3 (Mandatory Notices).

B. The '091 Patent

The '091 patent relates to acoustic noise suppression in a multiple-microphone system using a voice-activity detector (VAD). Ex. 1001, Abstract. Figure 2, below, shows an embodiment of the system.

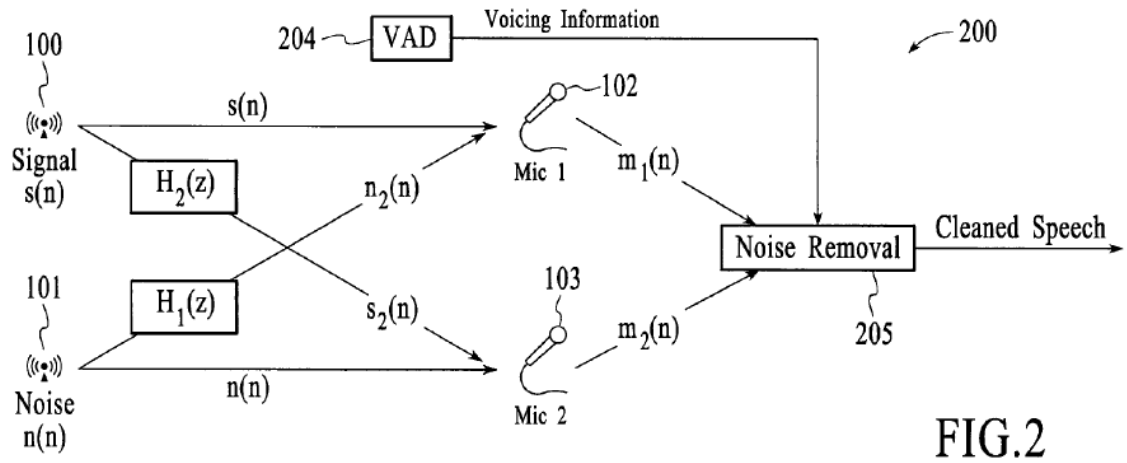

FIG.2

Figure 2, above, shows signal microphone 102, noise microphone 103, and a VAD 204. *Id.* at 3:25–45. VAD 204 determines when a speaker is speaking by, for example, sensing the vibration of human tissue associated with voicing activity. *Id.* at 3:39–45. The system generates a first transfer function $H_1(z)$ when it determines that the acoustic signal does not have voicing information for a specified time. *Id.* at 7:50–53. The system generates a second transfer function $H_2(z)$ when it determines that the acoustic signal has voicing information for a specified time. *Id.* at 7:53–56. The first transfer function $H_1(z)$ and the second transfer function $H_2(z)$ are used for denoising. *Id.* at 7:56–60.

C. Claims

Of those challenged, claims 1, 11, and 18 are independent. Claim 11 is reproduced below.

> 11. A system for removing acoustic noise from the acoustic signals, comprising:
>
> a receiver that receives at least two acoustic signals via at least two acoustic microphones positioned in a plurality of locations;
>
> at least one sensor that receives human tissue vibration information associated with human voicing activity of a user;

> a processor coupled among the receiver and the at least one sensor that generates a plurality of transfer functions,
>
> wherein the plurality of transfer functions includes a first transfer function representative of a ratio of energy of acoustic signals received using at least two different acoustic microphones of the at least two acoustic microphones,
>
> wherein the first transfer function is generated in response to a determination that voicing activity is absent from the acoustic signals for a period of time,
>
> wherein the plurality of transfer functions includes a second transfer function representative of the acoustic signals,
>
> wherein the second transfer function is generated in response to a determination that voicing activity is present in the acoustic signals for the period of time,
>
> wherein acoustic noise is removed from the acoustic signals using the first transfer function and at least one combination of the first transfer function and the second transfer function to produce the denoised acoustic data stream.

Ex. 1001, 16:3–29 (line breaks added).

D. Evidence

Name	Reference	Exhibit No.
Ikeda	US 5,978,824, issued Nov. 2, 1999	1003
Puthuff	WO 00/21194 A1, published Apr. 13, 2000	1004
Alcivar	US 3,746,789, issued July 17, 1973	1005
Bartlett	US 5,473,684, issued Dec. 5, 1995	1006
Hussain	Amir Hussain et al., *A New Metric for Selecting Sub-Band Processing in Adaptive Speech Enhancement Systems*, 5th European Conference on Speech Communication and Technology (EuroSpeech '97), 2611–2614 (Sept. 1997)	1007
Sasaki	US 5,471,538, issued Nov. 28, 1995	1008

Petitioner also relies on the Declaration of Richard M. Stern, Ph.D. Ex. 1002.

E. Asserted Challenges to Patentability

Petitioner challenges claims 1–20 on the following grounds. Pet. 11.

Claims Challenged	Pre-AIA[2] 35 U.S.C. §	Reference(s)/Basis
1–8, 11–14, 16, 18–20	103	Ikeda, Puthuff
1–8, 11–14, 16, 18–20	103	Ikeda, Alcivar
3, 9, 15	103	Ikeda, Puthuff, Hussain
3, 9, 15	103	Ikeda, Alcivar, Hussain
10, 17	103	Ikeda, Puthuff, Sasaki
10, 17	103	Ikeda, Alcivar, Sasaki
11–14, 16, 18–20	103	Ikeda, Puthuff, Bartlett
11–14, 16, 18–20	103	Ikeda, Alcivar, Bartlett
15	103	Ikeda, Puthuff, Hussain, Bartlett
15	103	Ikeda, Alcivar, Hussain, Bartlett
17	103	Ikeda, Puthuff, Sasaki, Bartlett
17	103	Ikeda, Alcivar, Sasaki, Bartlett

Petitioner refers to the grounds based on Bartlett as "Ground 5." *Id.* Petitioner summarizes Ground 5 as "Grounds 1–4 References and Bartlett" and asserts that claims 11–20 are challenged. *Id.* Petitioner explains that "[e]ach limitation of claims 11-20 is disclosed and/or rendered obvious for the reasons discussed in the Grounds above." *Id.* at 66. In Ground 5, Petitioner relies on Bartlett for its noise-cancelling system that has a digital-signal processor. *Id.* at 67–69. A processor is a component of the system recited in claims 11–20. *See* Ex. 1001, 16:3–18:9. By contrast, claims 1–10

[2] Congress amended § 103 when it passed the Leahy-Smith America Invents Act (AIA). Pub. L. No. 112-29, § 3(c), 125 Stat. 284, 287 (2011). Here, Petitioner asserts that the previous version of § 103 applies. Pet. 11–12.

recite a method. *Id.* at 1:63–16:2. Thus, the table above is the Board's understanding of the challenges presented in the Petition.

II. ANALYSIS

A. Level of Ordinary Skill in the Art

Petitioner asserts,

> a person of ordinary skill in the art ("POSITA") would have had a minimum of a bachelor's degree in computer engineering, computer science, electrical engineering, mechanical engineering, or a similar field, and approximately three years of industry or academic experience in a field related to acoustics, speech recognition, speech detection, or signal processing. (Ex. 1002 ¶28.) Work experience could substitute for formal education and additional formal education could substitute for work experience. (*Id.*)

Pet. 13.

In its Preliminary Response, Patent Owner adopts Petitioner's proposed level of ordinary skill in the art. Prelim. Resp. 7–8.

In this Decision, we apply Petitioner's proposed definition. If Patent Owner proposes a different level of ordinary skill in the art in its Response, the parties are encouraged to explain how the differences affect the obviousness analysis.

B. Claim Construction

We need only construe terms that are in controversy. *Nidec Motor Corp. v. Zhongshan Broad Ocean Motor Co.*, 868 F.3d 1013, 1017 (Fed. Cir. 2017) (citing *Vivid Techs., Inc. v. Am. Sci. & Eng'g, Inc.*, 200 F.3d 795, 803 (Fed. Cir. 1999)).

Petitioner argues that it is unnecessary to construe any terms. Pet. 13. Patent Owner agrees. Prelim. Resp. 7.

Patent Owner's argument about the recited "determination" in claim 11 depends on that term's meaning. *Id.* at 16–18; *see infra* § II.C.3.b.i. Apart from our discussion about the meaning of the recited "determination" in Section II.C.3.b.i, we do not construe any terms.

C. Obviousness: Ikeda and Puthuff

1. Ikeda

Ikeda relates to canceling background noise introduced into a speech signal by a microphone. Ex. 1003, 1:4–8. Ikeda's system uses an adaptive filter. *Id.* In particular, the adaptive filter corrects signal distortion in an output signal. *Id.* at 2:52–53. The noise canceler can update the adaptive filter's coefficient and learn a signal-distortion correction filter when the desired signal component is present and the noise component is absent or negligibly small. *Id.* at 3:36–40.

2. Puthuff

Puthuff generally relates to a vibration sensor. Ex. 1004, 5:1–9. When ambient noise levels are low, a microphone detects sound in Puthuff's system. *Id.* When ambient noise levels increase, the microphone's signal fades out and the vibration sensor's signal fades in. *Id.* Puthuff claims that this makes the system less susceptible to false triggering in noisy environments. *Id.* at 6:6–10.

3. Claim 11

Petitioner asserts that the combination of Ikeda and Puthuff teaches or suggests the subject matter of claim 11. Pet. 14–36.

a. Sensor

Claim 11 recites, in part, "at least one sensor that receives human tissue vibration information associated with human voicing activity of a user." Ex. 1001, 16:8–10.

Petitioner asserts that it would have been obvious to use Puthuff's vibration sensor in Ikeda. Pet. 31–32. Petitioner proposes two combinations: a system that uses Puthuff's sensor in place of Ikeda's VAD, and another that uses the sensor in addition to Ikeda's VAD. *Id.* Petitioner gives several reasons for this combination, including improving the accuracy of voice detection. *See id.* at 31–36.

Ikeda describes the difficulties of commanding the adaptive filters to perform learning in some situations:

> It is therefore necessary to detect the above sections where the desired signal component S(z) is absent (or little) and the sections where the noise signal component N(z) is absent (or little) and to command the adaptive filters to perform leaning in such sections from the outside.
>
> *However, it is, in many cases, difficult to command the adaptive filters to perform learning from the outside in accordance with the level of the desired signal and that of the noise signal, depending on the situation in which the noise canceler is located.* With the conventional noise canceler, a sufficient noise canceling ability and a sufficient distortion correction characteristic are not achievable unless adequate learning sections are indicated to each adaptive filter for the learning purpose.

Ex. 1003, 3:40–54 (emphasis added).

Patent Owner argues that, in the text emphasized above, Ikeda teaches away from using "outside" sensors. Prelim. Resp. 1, 3–4, 10–13. In Patent Owner's view, Petitioner does not address why a person of ordinary skill in the art would add an outside sensor to Ikeda, which does not need a VAD for training its adaptive filters. *Id.* For example, Patent Owner argues that Ikeda criticizes using outside sensors as an inferior solution (*id.* at 13) and argues that a person of ordinary skill in the art would not have added Puthuff's

outside sensor because it would contradict Ikeda's inventive concept (*id.* at 11).

Yet Ikeda notes that it is difficult to command the adaptive filter's learning "*depending on the situation* in which the noise canceler is located." *See* Ex. 1003, 3:40–54 (emphasis added). We emphasize "depending on the situation" here because it indicates that Ikeda does not necessarily criticize all outside sensors, in all situations. *See id.* Rather, Ikeda's discussion of outside sensors refers to the sensors that were discussed in the background of the invention and under the specific conditions described in that section. *See id.* at 1:4–3:54, *quoted in* Prelim. Resp. 4. For example, in the part quoted by Patent Owner that allegedly teaches away, Ikeda explains that with conventional sensors "a sufficient noise canceling ability and a sufficient distortion correction characteristic are not achievable unless adequate learning sections are indicated to each adaptive filter for the learning purpose." *Id.* That is, Ikeda identifies a particular type of sensor: "conventional noise cancelers." *See id.*

Also, Ikeda's "Background of the Invention" Section provides specific discussion of a conventional noise canceler, which is shown in Figure 5, reproduced below. *See id.* at 1:43.

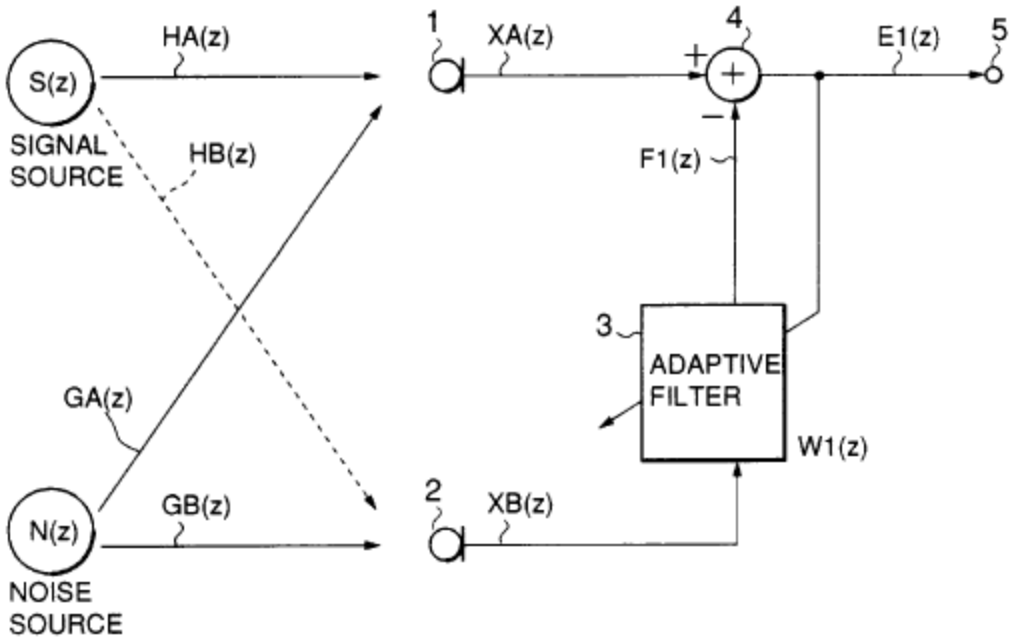

In Figure 5, the conventional noise canceler has a main signal microphone 1, a reference signal microphone 2, an adaptive filter 3, a subtracter 4, and an output terminal. *Id.* at 1:42–46. The conventional noise canceler updates the adaptive filter's coefficient and learns the acoustic characteristic of noise in sections where the noise signal *N(z)* is present and the desired signal component *S(z)* is absent or negligibly small. *Id.* at 3:32–36.

Ikeda teaches using this conventional sensor to detect the absence of a desired signal component. *Id.* at 3:32–45. In the context of discussing this sensor, Ikeda explains that "it is, in many cases, difficult to command the adaptive filters to perform learning from the outside in accordance with the level of the desired signal and that of the noise signal, depending on the situation in which the noise canceler is located." *Id.* at 3:46–50. At this stage and on this record, we preliminarily determine that the cited part of Ikeda refers to the limitations of this conventional sensor—not all outside sensors, generally.

The other parts from Ikeda support this reading. For example, according to Petitioner, Ikeda teaches multiple alternative options for detecting the absence of a desired signal component. *See* Pet. 21–22. For instance, Ikeda proposes using a signal-to-noise power ratio estimator. *Id.* (citing Ex. 1003, 4:49–56, Fig. 1; Ex. 1002 ¶ 70). Ikeda explains that, with the estimator, the noise canceler "insures rapid convergence and allows a minimum of signal distortion to occur without resorting to a command customarily input from the outside for commanding the learning operation of filters." Ex. 1003, 9:14–18, *cited in* Prelim. Resp. 11. At this stage and on this record, we preliminarily determine that Ikeda at most describes an alternative that is desirable in some situations but does not criticize, discredit, or otherwise discourage modifying it to arrive at the claimed invention in a way that would indicate that Ikeda teaches away from the claimed solution. *See In re Fulton*, 391 F.3d 1195, 1200–01 (Fed. Cir. 2004).

Although Patent Owner's teaching-away argument focuses on one specific approach that uses conventional noise cancelers, Petitioner describes the benefits of the multiple options for detecting voicing activity in different situations. For example, Petitioner asserts that "Ikeda discloses the need for accurately determining periods when a desired signal (e.g., voicing activity) is present and periods when a desired signal is absent for an adaptive noise canceler to function optimally." Pet. 32 (citing Ex. 1003, 3:32–54; Ex. 1002 ¶ 91). According to Petitioner, a person of ordinary skill in the art would have looked to other VAD methods, including Puthuff's. *Id.* at 32–33. Petitioner argues that Puthuff would have improved voice-activity detection in noisy environments, in particular. *Id.* at 32–33 (citing Ex. 1004, 3:19–24,

6:6–10). Petitioner supports this position with the testimony of Dr. Richard Stern. Ex. 1002 ¶¶ 91–92, *cited in* Pet. 32–33.

On this record, Petitioner's assertions are adequately supported. Pet. 31–33. The cited part of Puthuff, for instance, explains that its system improves "immunity to false triggering due to noisy environments." Ex. 1004, 3:19–24, 6:6–10. We credit the testimony of Dr. Richard Stern, which is consistent with this teaching. Ex. 1002 ¶ 91. At this stage, the Petition sufficiently explains how Ikeda's and Puthuff's systems are similar and how both are concerned with solving the same problem. *See* Pet. 31–35.

Patent Owner argues that Petitioner does not identify any problem in Ikeda or any potential benefit that would have led a POSITA to include Puthuff's transducer. Prelim. Resp. 14. In Patent Owner's view, Ikeda already includes a solution for detecting voicing activity. *Id.* at 14–15. We disagree because, as discussed above, Petitioner proposes using the sensor in noisy environments. Pet. 33 (citing Ex. 1004, 3:19–24, 6:6–10).

Patent Owner argues that "Ikeda does not mention high noise levels." Prelim. Resp. 14. But it is well established that an express, written motivation to combine need not appear in the references themselves. *Ruiz v. A.B. Chance Co.*, 357 F.3d 1270, 1276 (Fed. Cir. 2004).

Patent Owner also argues that Petitioner's proposed modification would destroy Ikeda's objectives. Prelim. Resp. 14–15. At this stage and on this record, we disagree with Patent Owner for the same reasons as discussed in connection with its teaching-away argument. Also, Petitioner alternatively proposes to add Puthuff's vibration sensor before Ikeda's estimator to improve the overall accuracy:

> Puthuff's vibration sensor and transition circuit could be used so that the signal sent to Ikeda's signal-to-noise power ratio

> estimator as the "main signal" would be more accurate under varying conditions: during periods of low noise, the signal transmitted to the signal-to-noise power ratio estimator would be predominantly the signal from the first microphone 1. [Ex. 1002 ¶97.] But during periods of high ambient noise, the signal transmitted to the signal-to-noise power ratio estimator would be predominantly the "bone conduction component of the audio signal, comprising primarily the talker's speech."

Pet. 34–35 (citing Ex. 1004, 10:10–13). Under this rationale, Petitioner asserts that the proposed combination "would ensure that the 'main signal' being provided to the signal-to-noise power ratio generator (which in Ikeda's system is only the output of microphone 1, XA(z)) was the most accurate representation of the speech signal (the 'output signal 40' in Puthuff)." *Id.* at 35 (citing Ex. 1002 ¶ 97). In this way, Petitioner is proposing to further Ikeda's objectives by improving the operation of the existing components—i.e., "the signal-to-noise power ratio estimator would simply receive a more accurate and better representation of the user's voice in high noise environments." *Id.* at 35 (citing Ex. 1002 ¶ 98).

Thus, at this stage and on this record, Petitioner has provided sufficient articulated reasoning with some rational underpinning to support its conclusion of obviousness. *KSR Int'l Co. v. Teleflex Inc.*, 550 U.S. 398, 418 (2007). We preliminarily determine that Petitioner has sufficiently shown that this combination teaches or suggests the recited sensor in claim 11.

Even so, Patent Owner's teaching-away argument raises factual issues that might be better resolved on a fully developed record. Thus, we encourage the parties to further provide arguments and evidence about (1) the similarities between Puthuff's sensor and the conventional sensors discussed by Ikeda in the background, (2) whether Petitioner's proposed

combination would suffer from the same deficiencies as those sensors, or (3) anything else that the parties believe would help the Board in assessing Patent Owner's teaching-away argument should Patent Owner assert this argument in its Response to the Petition. *See, e.g.*, Prelim. Resp. 1, 3–4, 10–13.

b. Generating the First Transfer Function

Claim 11 recites, in part, "wherein the first transfer function is generated in response to a determination that voicing activity is absent from the acoustic signals for a period of time." Ex. 1001, 16:17–20.

Petitioner asserts that this limitation is taught by Ikeda alone or Ikeda in combination with Puthuff. Pet. 17–35.

i. Ikeda's Determination

Petitioner asserts that Ikeda discloses using an external sensor to detect the absence of a desired signal component. *Id.* at 21–22 (citing Ex. 1003, 3:32–61, 9:11–18; Ex. 1002 ¶ 70). Petitioner asserts that, as an alternative to this arrangement, Ikeda's system uses a signal-to-noise power ratio estimator, shown below in Figure 1 with Petitioner's annotations. *Id.* (citing Ex. 1003, 4:49–56, Fig. 1; Ex. 1002 ¶ 70).

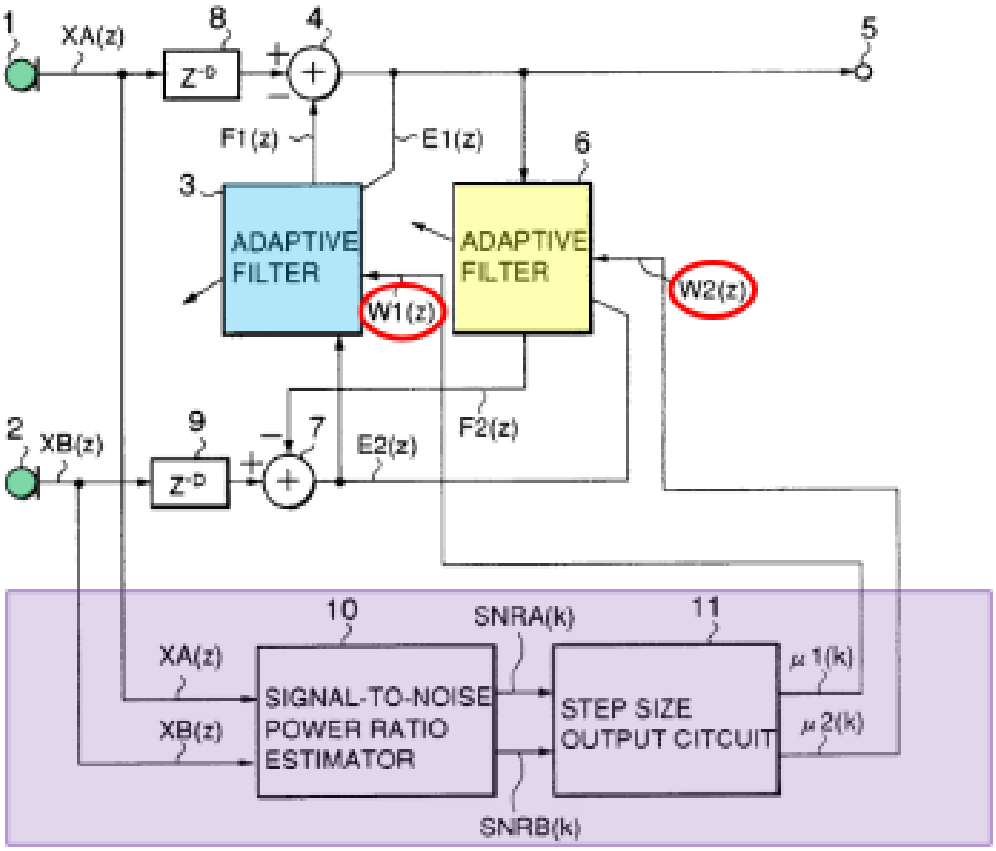

Ikeda's Figure 1, above, shows signal-to-noise power ratio estimator 10 that receives microphone signals XA(z) and XB(z), and produces estimated signal-to-noise power ratios SNRA(k) and SNRB(k). Ex. 1003, 8:6–12, Fig. 1. Step-size output circuit 11 receives those ratios and produces step sizes μ1(k) and μ2(k). *Id.* at 8:13–63. Adaptive filters 3 and 6 receive the step sizes along with a transfer characteristic, W1(z) or W2(z). *Id.,* Fig. 1.

Petitioner asserts that voicing activity is absent when SNRA(k) and SNRB(k) are small or zero. Pet. 22–23 (citing Ex. 1003, 7:54–63, 8:13–63; Ex. 1002 ¶ 72). According to the Petition, Ikeda updates W1(z) by a relatively larger amount when the desired signal is smaller than the noise signal. *Id.* (citing Ex. 1003, 5:64–6:5; 6:16–60; Ex. 1002 ¶ 72). For example, the desired signal, e.g., a voice signal, could be absent entirely. *Id.* On the other hand, Petitioner asserts that Ikeda decreases the update amount when

the desired signal is greater than the noise signal. *Id.* (citing Ex. 1003, 6:2–5, 6:16–60, 9:4–10; Ex. 1002 ¶ 72). For example, the update amount can be zero. *Id.* So, when voicing activity is absent—e.g., SNRA(k) and SNRB(k) are small or zero—step size μ1(k) is increased and μ2(k) is decreased. *Id.* (citing Ex. 1003, 7:54–63, 8:13–63; Ex. 1002 ¶ 72).

The step sizes control the adaptation rate. Ex. 1003, 8:64–9:2. Ikeda compares step sizes μ1(k) and μ2(k) and sets the smaller one to zero. *Id.* at 9:4–10. Setting a step size to zero interrupts the corresponding adaptive filter's learning function. *Id.* Petitioner explains that, after the comparison and setting, adaptive filter 3 calculates transfer characteristic W1(z). Pet. 23 (citing Ex. 1003, 9:4–10; Ex. 1002 ¶ 72).

Petitioner asserts that transfer characteristic W1(z) is the recited first transfer function. *Id.* at 20–21. That is, under Petitioner's rationale, a sequence of events leads to the calculation of W1(z): voicing activity is absent, SNRA(k) and SNRB(k) are small or zero, and μ2(k) is set to zero. *See id.* 21–24. In this way, Petitioner asserts that Ikeda teaches generating the first transfer function, W1(z), in response to a determination that voicing activity is absent, as claimed. *See id.*

Patent Owner argues that Ikeda does not determine that voicing activity is absent. Prelim. Resp. 16–17. In Patent Owner's view, Ikeda's system merely updates W1(z) by a relatively larger amount when the desired signal is smaller than the noise signal, and Ikeda only determines that the voicing activity is less than the noise signal, to the extent that it makes a determination. *Id.* at 17–18. According to Patent Owner, "Petitioner does not point to any evidence in Ikeda that a determination that the main signal is smaller than the noise signal means that voicing activity is absent"; rather, "Petitioner merely infers the absence of voicing activity without evidence,"

and in fact "given that the absence of voicing activity is not necessary for generating W1(z), a POSITA would understand that Ikeda teaches no such determination." *Id.* at 18.

At this stage and on this record, we preliminarily disagree that Petitioner fails to identify a determination. *See id.* at 18–19. Rather, Petitioner explains that Ikeda's estimator 10 and circuit 11 perform the determination. Pet. 20–22. In fact, Petitioner compares these components to an external VAD sensor, and identifies signals that it believes are indications that voicing activity is absent. *See id.* at 21–22. Petitioner asserts that W1(z) must be calculated when "the desired signal component S(z) is absent or negligibly small." *Id.* at 21 (quoting Ex. 1003, 3:32–36). Also, in the alternative rationale, Petitioner proposes replacing Ikeda's estimator 10 and circuit 11 with an external VAD, which further indicates that Petitioner considers estimator 10 and circuit 11 to be performing the same function as a VAD—i.e., detecting the presence of a voice. *See, e.g.*, *id.* at 31–32.

At this stage and on this record, we disagree with Patent Owner's arguments about the recited determination. *See* Prelim. Resp. 16–18. Specifically, Patent Owner acknowledges that Ikeda determines whether the voicing activity is less than the noise signal, "[t]o the extent that Ikeda makes a determination regarding the level of voicing activity," but argues that this is different from the recited determination. *See id.* at 17–18. Yet claim 11 only recites that voicing activity can be determined to be absent. The claim does not recite how the determination must be made or what format the determination's output must take.

In one embodiment disclosed in the '091 patent, VAD 204 equals zero when no speech is being produced. Ex. 1001, 3:66–4:2. Like the embodiment disclosed in the '091 patent, Petitioner has shown that, when

voice is absent, Ikeda's circuit sets the step size to 0. Pet. 22–24 (citing Ex. 1003, 9:4–10; Ex. 1002 ¶ 73). In this way, Petitioner asserts that the step size's value indicates the absence of voicing activity. *See id.* The step size is fed to the adaptive filters to update the transfer function W1(z). Ex. 1003, 8:64–9:3. This addresses the "in response to" part of the claim under Petitioner's rationale. *See* Pet 23–24.

In at least this way, Petitioner sufficiently shows, at this stage and on this record, that the Ikeda-Puthuff combination teaches or suggests the recited step of generating a first transfer function. *See id.*

ii. Puthuff's Sensor

In an alternative rationale, Petitioner proposes using Puthuff's vibration sensor in place of Ikeda's signal-to-noise power ratio estimator 10 and step-size output circuit 11. *Id.* at 31–32 (citing Ex. 1002 ¶ 88).

Apart from the arguments against this combination that we analyzed in Section II.C.3.a, Patent Owner does not present separate arguments directed to Petitioner's combination as it relates to the step of generating a first transfer function. *See* Prelim. Resp. 16–19.

Even so, Petitioner has the burden to show that the challenged claims are unpatentable. *See Dynamic Drinkware, LLC v. Nat'l Graphics, Inc.*, 800 F.3d 1375, 1378 (Fed. Cir. 2015). Thus, we have reviewed Petitioner's arguments and evidence submitted in connection with the Puthuff-based alternative rationale and find them to be sufficient at this stage and on this record for the reasons discussed in Section II.C.3.a.

Thus, Petitioner has sufficiently shown under two alternative rationales that the Ikeda-Puthuff combination teaches or suggests the recited step of generating a first transfer function.

c. Second Transfer Function

Claim 11 recites, in part, "wherein the plurality of transfer functions includes a second transfer function representative of the acoustic signals, wherein the second transfer function is generated in response to a determination that voicing activity is present in the acoustic signals for the period of time." Ex. 1001, 16:20–24.

As discussed in Section II.C.3.b, Petitioner asserts that determining voice activity is taught by Ikeda alone or Ikeda in combination with Puthuff. Pet. 17–35. In the combination with Puthuff, Ikeda uses Puthuff's VAD. *See supra* § II.C.3.b.

i. Ikeda's Determination

Petitioner asserts that Ikeda's W2(z) is the second transfer function. Pet. 25 (citing Ex. 1003, 2:53–3:31, 5:6–30). Petitioner's analysis of the recited determination that voicing activity is present is similar to its reasoning for determining the absence of such activity. *Id.* In particular, Petitioner relies on the operation of Ikeda's signal-to-noise power ratio estimator 10 and step size output circuit 11:

> Ikeda discloses that most closely approximating the transfer function W2(z) requires calculating W2(z) when "signal component S(z) is present and the noise component N(z) is absent or negligibly small." (Ex. 1003, 3:36–40; *see id.*, 2:45–51.) Ikeda determines when this occurs using the "signal-to-noise power ratio estimator" and a "step size output circuit." (*Id.*, 5:64–6:15; *supra* §VI.A.1.c.i; Ex. 1002 ¶77.)

Id. at 26. Petitioner asserts that, when voicing activity is present and noise is absent or negligible, N(z) is approximately equal to zero in Ikeda's equations for the transfer function. *Id.* at 26–27 (citing Ex. 1002 ¶ 78).

Patent Owner argues that Ikeda does not determine that voicing activity is present. Prelim. Resp. 21–22. Patent Owner's arguments are

similar to those presented in connection with the determination that voicing activity is absent, which we analyze in Section II.C.3.b.i *supra*.

For instance, Patent Owner argues that Petitioner does not show that Ikeda makes any determination as to whether voicing activity is present because Ikeda simply adjusts step sizes. *Id.* at 21–22. Patent Owner argues that "Ikeda's entire invention avoids such a determination by setting the step sizes based on the signal-to-noise ratios of the microphone signals." *Id.* at 22.

We disagree with these arguments for the same reasons discussed in Section II.C.3.b.i. Specifically, claim 11 recites that voicing activity can be determined to be present, but the claim does not recite how the determination must be made or what format the determination's output must take.

In one embodiment disclosed in the '091 patent, VAD 204 equals one when speech is being produced. Ex. 1001, 3:66–4:2. Like the embodiment disclosed in the '091 patent, Petitioner has shown that Ikeda's circuit sets the step size according to whether voicing activity is present and noise is absent or negligible. Pet. 25–27 (citing Ex. 1003, 2:53–3:31, 5:6–30; Ex. 1002 ¶¶ 77–78). In this way, Petitioner asserts that the step size's value indicates the presence of voicing activity. *See id.*

Thus, at this stage and on this record, Petitioner has shown that Ikeda teaches or suggests generating the second transfer function, as recited in claim 11. *See id.*

ii. Puthuff's Sensor

In an alternative rationale, Petitioner proposes using Puthuff's vibration sensor in place of Ikeda's signal-to-noise power ratio estimator 10 and step-size output circuit 11. *Id.* at 31–32 (citing Ex. 1002 ¶ 88).

Apart from the arguments against this combination that we analyzed in Section II.C.3.a, Patent Owner does not present separate arguments directed to Petitioner's combination as it relates to the step of generating a second transfer function.

Even so, Petitioner has the burden to show that the challenged claims are unpatentable. Thus, we have reviewed Petitioner's arguments and evidence submitted in connection with the Puthuff-based alternative rationale and find them to be sufficient at this stage and on this record for the reasons discussed in Section II.C.3.a.

Thus, Petitioner has sufficiently shown under two alternative rationales that the Ikeda-Puthuff combination teaches or suggests the recited step of generating a second transfer function.

d. Remaining Limitations

Apart from the arguments discussed above, Patent Owner does not present arguments specifically directed to the subject matter recited in the rest of the claim. Even so, Petitioner has the burden to show that the challenged claims are unpatentable. Thus, we have reviewed Petitioner's arguments and evidence submitted in connection with the remaining limitations and find them to be sufficient at this stage and on this record.

From the current record, Petitioner has established a reasonable likelihood that it will prevail in demonstrating that at least independent claim 11 would have been obvious over Ikeda and Puthuff. Because Petitioner has shown a reasonable likelihood of success in showing that claim 11 is unpatentable, we institute on all challenges and all claims challenged in the Petition. We have reviewed the rest of the Petition, and the remainder of this Decision provides guidance to the parties.

4. Claim 18

Claim 18 recites limitations similar in scope to those of claim 11.

Petitioner asserts that the combination of Ikeda and Puthuff teaches or suggests the subject matter of claim 18. Pet. 37–38.

Apart from the arguments discussed above in connection with claim 11, Patent Owner does not present arguments specifically directed to the subject matter recited in claim 18. *See* Prelim. Resp. 10, 16, 21. At this stage, we disagree with Patent Owner's arguments about claim 11. *See supra* § II.C.3.

Still, Petitioner has the burden to show that the challenged claims are unpatentable. Thus, we have reviewed Petitioner's arguments and evidence submitted in connection with claim 18 and find them to be sufficient at this stage and on this record. *See* Pet. 37–38.

5. Claim 1

Petitioner asserts that the combination of Ikeda and Puthuff teaches or suggests the subject matter of claim 1. *Id.* at 40–44.

a. VAD Signal

Claim 1 recites, in part, "generating a voice activity detection (VAD) signal using the voice activity signal." Ex. 1001, 15:4–5.

Petitioner asserts that Ikeda's signals from the signal-to-noise power ratio estimator or the step-size output circuit have a VAD signal. Pet. 41.

Alternatively, Petitioner asserts that Ikeda as modified by Puthuff teaches generating the VAD signal. *Id.* at 41–42.

Patent Owner argues that Ikeda lacks the required signal with information on human-tissue vibration, and that a person of ordinary skill in the art would not have been motivated to include Puthuff's sensor to meet that limitation. Prelim. Resp. 15–16.

For the same reasons that we discussed in Section II.C.3.a, we disagree with Patent Owner's argument, and we preliminarily determine that Petitioner has sufficiently shown that the Ikeda-Puthuff combination teaches or suggests "generating a voice activity detection (VAD) signal using the voice activity signal," as recited in claim 1. *See* Pet. 41–42.

b. Generating Two Transfer Functions

Unlike claim 11, claim 1 recites generating two transfer functions when the VAD indicates that voicing activity is absent:

> *generating at least two transfer functions* representative of a ratio of energy of the acoustic signal received using at least two different acoustic microphones of the at least two acoustic microphones *when the VAD indicates that user voicing activity is absent*, wherein the at least two transfer functions comprise a first transfer function and a second transfer function.

Ex. 1001, 15:6–12 (emphasis added).

To address the subject matter recited in claim 1, Petitioner refers to its arguments and evidence presented in connection with claim 11. Pet. 42–43. As for the subject matter specific to claim 1, i.e., generating two transfer functions, Petitioner further asserts that Ikeda's system updates both W1(z) and W2(z) when the VAD indicates that voicing activity is present and not present. *See id.* at 43.

Alternatively, similar to its analysis for claim 11, Petitioner asserts that Puthuff's vibration sensor detects the presence or absence of a user's voice and proposes replacing Ikeda's VAD with Puthuff's. *Id.* at 42 (citing Pet. § VI.A.1.e; Ex. 1002 ¶¶ 84–98, 122). Under this combination, Petitioner asserts that Puthuff's sensor can provide "a VAD signal that Ikeda's system would use in lieu of Ikeda's VAD signal for the same purpose of controlling

the generation of Ikeda's transfer functions." *Id.* at 43 (citing Ex. 1002 ¶¶ 123–126).

Patent Owner argues that Ikeda lacks a VAD because "its signal-to-noise or step signals do not meet the VAD limitation as claimed (which requires information about human tissue vibration)." Prelim. Resp. 19–20. At this stage, we disagree with Patent Owner's argument because Petitioner relies on Ikeda in combination with Puthuff to address the subject matter related to human-tissue vibration, and Petitioner's obviousness rationale is sufficient. *See, e.g.*, Pet. 40 (citing Ex. 1002 ¶¶ 84–98, 118); *see supra* § II.C.3.a.

Patent Owner also argues that Ikeda's "signal-to-noise ratios or step signals do not indicate whether voicing activity is present" because "[t]hey merely indicate the relative strengths of the signal and noise signals." Prelim. Resp. 20 (citing Ex. 1003, 7:19–9:3). In Patent Owner's view, "[e]ven if, in some cases, a high signal-to-noise ratio is correlated with voicing activity, Petitioner has not shown that the signals indicate voicing activity." *Id.*

We disagree with Patent Owner's argument for the reasons discussed in Section II.C.3.

Also, claim 11 recites a determination, and a response to that determination. Ex. 1001, 16:17–24. By contrast, claim 1 uses the term "when" instead of the determination and a response. *Id.* at 15:6–12. So Patent Owner's arguments about the lack of a determination or indication in Ikeda are not relevant to claim 1. *See* Prelim. Resp. 19–20.

To the extent that Patent Owner argues that Ikeda must generate the transfer function in every case that voicing activity is absent, we note that

the ’091 patent explains that it is assumed that “VAD element 204 is never perfect.” Ex. 1001, 3:63.

At this stage and on this record, Petitioner has provided sufficient articulated reasoning with some rational underpinning to support its conclusion of obviousness. *KSR*, 550 U.S. at 418.

c. Remaining Limitations

Apart from the arguments discussed above, Patent Owner does not present arguments specifically directed to the subject matter recited in the rest of the claim. Even so, Petitioner has the burden to show that the challenged claims are unpatentable. Thus, we have reviewed Petitioner’s arguments and evidence submitted in connection with the remaining limitations and find them to be sufficient at this stage and on this record.

From the current record, Petitioner has established a reasonable likelihood that it will prevail in demonstrating that at least independent claim 1 would have been obvious over Ikeda and Puthuff.

D. Obviousness: Ikeda and Alcivar

1. Alcivar

Alcivar discloses a voice-activated transmit switch for communicating in noisy environments. Ex. 1005, Abstract. Alcivar’s switch is activated by a tissue-conduction microphone contacting the user’s neck near the larynx. *Id.*, Abstract, 4:66–5:12.

2. Claims 1, 11, and 18

As in the challenge based on Ikeda and Puthuff, Petitioner asserts that Ikeda teaches the subject matter recited in claims 1, 11, and 18, except that Petitioner relies on Alcivar’s tissue-conduction microphone for the claimed subject matter related to human-tissue vibration. Pet. 47–51.

Patent Owner's arguments against the Ikeda-Alcivar combination are similar to those directed to the Ikeda-Puthuff combination. *See* Prelim. Resp. 22–24. For example, Patent Owner makes similar arguments about Ikeda's lack of any discussion about noisy environments and about incompatibility with "Ikeda's entire purpose and inventive concept [which] is to avoid using outside sensors." *Id.* (citing Pet. 51–52; Ex. 1002 ¶¶ 151–152; Ex. 1003, 9:14–18). At this stage and on this record, we disagree with Patent Owner's arguments for reasons similar to those discussed in connection with the Ikeda-Puthuff combination. *See supra* § II.C.

As for the arguments specific to the Ikeda-Alcivar combination, Patent Owner argues that "Petitioner identifies no part of Alcivar that suggests (or could benefit from) combination with Ikeda." Prelim. Resp. 23. In Patent Owner's view, Petitioner's assertion that Alcivar's tissue-conduction microphone is a "cheaper, simpler option than Ikeda's acoustic microphone-based VAD" is unsupported by the evidence. *Id.* at 23–24 (citing Pet. 50).

Patent Owner's arguments raise factual issues about cost considerations and compatibility that are best resolved during trial. *See id.* Even so, Petitioner, at this stage, sufficiently explains that Alcivar's tissue-conduction microphones can "discriminate against unwanted noises . . . without having to resort to more elaborate signal processing techniques." Pet. 49 (citing Ex. 1005, 5:8–12; Ex. 1002 ¶ 150). Patent Owner does not dispute that Ikeda and Alcivar use different approaches—e.g., Ikeda discloses at least one embodiment that does not rely on outside sensors. *See, e.g.*, Prelim. Resp. 23 (arguing that "Ikeda's entire purpose and inventive concept is to avoid using outside sensors"). The cited passage from Alcivar is at least relevant to this difference because the passage compares an

approach that uses an external tissue-conduction microphone to ones that use signal processing in place of an outside sensor. Ex. 1005, 5:8–12.

Patent Owner also argues that Alcivar is incompatible with Ikeda's stated goals because (1) Alcivar requires specific placement of the tissue-conduction microphone, which is determined by trial and error, and (2) Alcivar's microphone must be insulated from external sounds by a layer of sound-absorbing material. Prelim. Resp. 24 (citing Ex. 1005, 5:16–20, 5:21–23). At this stage, we disagree that Ikeda is incompatible with outside sensors for the reasons discussed in Section II.C. *See* Pet. 21–22 (citing Ex. 1003, 3:32–61, 9:11–18; Ex. 1002 ¶ 70); *id.* at 50 (analyzing the Ikeda-Alcivar combination and citing Pet. § VI.A.1.e).

Apart from the arguments discussed above, Patent Owner does not present arguments specifically directed to the subject matter recited in the remaining limitations of claims 1, 11, and 18 that are not specifically referenced above.

Even so, Petitioner has the burden to show that the challenged claims are unpatentable. Thus, we have reviewed Petitioner's arguments and evidence submitted in connection with the Ikeda-Alcivar combination as applied to the remaining limitations of claims 1, 11, and 18 and find them to be sufficient at this stage and on this record. *See id.* at 47–51 (claim 11), 53–54 (claim 1), 52 (claim 18).

E. Remaining Claims and Challenges

Patent Owner does not present arguments specifically directed to the remaining challenges and claims not otherwise discussed above. *See* Prelim. Resp. Even so, Petitioner has the burden to show that the challenged claims are unpatentable. Thus, we have reviewed Petitioner's arguments and evidence submitted in connection with claims 2–10, 12–17, 19, and 20 and

find them to be sufficient at this stage and on this record. *See* Pet. 36–39, 44–47, 51–52, 54–68.

III. CONCLUSION

Petitioner has shown a reasonable likelihood of prevailing as to the unpatentability of at least one of the challenged claims. Thus, we institute an *inter partes* review on all claims challenged in the petition and on all grounds in the petition.

IV. ORDER

It is

ORDERED that, under 35 U.S.C. § 314(a), an *inter partes* review of claims 1–20 of the '091 patent is instituted for all grounds in the Petition;

FURTHER ORDERED that, under 35 U.S.C. § 314(a), *inter partes* review of the '091 patent is instituted on this Decision's entry date, and under 35 U.S.C. § 314(c) and 37 C.F.R. § 42.4, notice is given of the trial's institution; and

FURTHER ORDERED that Petitioner's Motion for Joinder (Paper 3) is dismissed as moot.

For PETITIONER:

Indranil Mukerji
John C. Moulder
WILLKIE FARR & GALLAGHER LLP
imukerji@willkie.com
jmoulder@willkie.com

For PATENT OWNER:

Peter Lambrianakos
Vincent J. Rubino
Enrique W. Iturralde
Richard Cowell
Jacob Ostling
FABRICANT LLP
plambrianakos@fabricantllp.com
vrubino@fabricantllp.com
eiturralde@fabricantllp.com
rcowell@fabricantllp.com
jostling@fabricantllp.com