UNITED STATES PATENT AND TRADEMARK OFFICE

BEFORE THE PATENT TRIAL AND APPEAL BOARD

LG ELECTRONICS, INC.,

Petitioner,

v.

JAWBONE INNOVATIONS, LLC,

Patent Owner.

Patent No. 8,326,611
Filing Date: October 26, 2009
Issue Date: December 4, 2012

Inventor: Nicolas Petit, Gregory Burnett, and Zhinian Jing
Title: ACOUSTIC VOICE ACTIVITY DETECTION (AVAD) FOR ELECTRONIC SYSTEMS

DECLARATION OF AKBAR M. SAYEED, Ph.D.

Case No. IPR2023-01155

TABLE OF CONTENTS

Page(s)

I. INTRODUCTION 1

A. Background and Qualifications 1

II. COMPENSATION 6

III. MATERIALS CONSIDERED 6

IV. LEGAL PRINCIPLES 7

V. LEVEL OF SKILL IN THE ART 8

VI. THE CLAIMED INVENTION OF THE ’611 PATENT 8

VII. CLAIM CONSTRUCTION 12

VIII. THE ALLEGED PRIOR ART 14

A. Avendano ’880 (U.S. Patent No. 8,194,880) 14

B. Visser (U.S. Patent No. 7,464,029) 16

C. Avendano/Visser Combination 19

IX. PETITIONER’S COMBINATIONS DO NOT RENDER ANY CLAIM OBVIOUS 20

A. GROUND 1: The Combination of Avendano and Visser Does Not Render Obvious Claims 1-7, and 25-28 20

1. Petitioner’s Combination Does Not Disclose or Render Obvious “forming a filter that describes a relationship for speech between the first physical microphone and the second physical microphone” as Required by All Challenged Claims 20

i. Avendano’s Delay Node Does Not Render Obvious The Claimed Filter 21

ii. The Petition Fails to Show that a POSITA Would Have Been Motivated to Make the Avendano/Visser Combination.....23

B. GROUND 2: Avendano, Visser, and Bisgaard Do Not Render Obvious Claims 8-16, 23-24 26

C. GROUND 3: Avendano, Visser, Bisgaard, and Hou Do Not Render Obvious Claims 17-19 27

D. GROUND 4: Avendano, Visser, Bisgaard, Hou, and "Frequency Art" Do Not Render Obvious Claims 20-22 27

X. CONCLUSION.....27

I, Akbar M. Sayeed, declare as follows:

1. I have been asked by counsel for Patent Owner, Jawbone Innovations, LLC ("Jawbone" or "Patent Owner"), to review U.S. Patent No. 8,326,611 (the "'611 Patent") entitled ACOUSTIC VOICE ACTIVITY DETECTION (AVAD) FOR ELECTRONIC SYSTEMS, and to provide my technical review, analysis, insights, and opinions regarding the '611 Patent in view of the prior art cited by Petitioner LG Electronics, Inc. ("LG" or "Petitioner"). I submit this declaration in support of Patent Owner's Preliminary Response in this IPR proceeding. I have personal knowledge of the matters stated herein and would be competent to testify to them if required.

2. I have been retained on behalf of Jawbone for the above-captioned *inter partes* review proceeding. I understand that the '611 Patent is currently assigned to Jawbone.

3. I am over 18 years of age. I have personal knowledge of the facts stated in this Declaration and could testify competently if asked to do so.

I. INTRODUCTION

A. Background and Qualifications

4. I have reviewed and am familiar with the specification of the '611 Patent. I understand the '611 Patent has been provided as Exhibit 1001. I will cite to the specification using the following format: '611 Patent at col.:line.

5. My CV is being submitted simultaneously herewith (Ex. 2003).

6. I received my B.S. degree in Electrical and Computer Engineering (ECE) from the University of Wisconsin-Madison in 1991. I received my M.S. and Ph.D. degrees in ECE from the University of Illinois at Urbana-Champaign in 1993 and 1996, respectively. In my undergraduate and graduate studies, I look a variety of courses generally focusing on the areas of signal processing, communication theory, information theory, electromagnetics and antennas, and statistical techniques in signal processing and communications. My Ph.D. dissertation was entitled "Statistical Time-Frequency Analysis" in which I proposed a new framework for statistical signal processing using time-frequency representations, mathematical tools that extend the powerful theory of Fourier transforms and Fourier analysis to time-varying signals and systems.

7. I currently work as an Independent Researcher, Engineer and Technical Consultant, and worked as professor of Electrical and Computer Engineering at the University of Wisconsin-Madison from 1997-2021, where I directed the *Wireless Communications and Sensing Laboratory* until my retirement on August 1, 2021 to pursue a career as an independent researcher and consultant.

8. My current work as an independent researcher and consultant spans STEM (science, technology, engineering & mathematics) fields through the lens of

information science and technology. My STEM skills and experience cover a broad range of areas, including:

- Wireless technologies for sensing, processing and communication of information (5G/6G/XG), internet of things, and emerging technologies for untapped spectrum (e.g., millimeter-wave, THz).
- Sensing and acquisition of data in new modalities through technological innovation.
- Machine learning and statistical techniques for extracting useful information from data.
- Quantum information science and technology (computing, sensing and communication) spanning foundational concepts, algorithms, and platforms.
- Conception, design and development of new information technologies through basic theory, computational modeling, and hybrid software-hardware prototyping and experimentation.

9. I have written/co-written 200+ papers in leading journals and conferences. I am an inventor/co-inventor of 10 patents.

10. After receiving my Ph.D. in 1996, I spent a year at Rice University as a postdoctoral research fellow where I expanded the scope of my research to the growing field of wireless communications that underpins much of mobile cellular

technology. In particular, the propagation channels encountered in mobile cellular communication are inherently time-varying in nature and that provided a natural connection to my Ph.D. research. After spending a year at Rice University, I accepted a position as an Assistant Professor in the ECE Department at the University of Wisconsin-Madison in 1997. I was granted tenure and promoted to Associate Professor in 2003, and was promoted to Professor in 2008.

11. I founded and directed the Wireless Communication and Sensing Laboratory at UW-Madison and engaged in research, teaching and innovation in the basic science, engineering, and technology of sensing, processing, and communication of information. In particular, I led a team in the conception, design, development and successful demonstration of a state-of-the-art prototype for multi-beam MIMO (multiple input multiple output) communication at 28 GHz based on the concept of a lens array that I had pioneered.

12. I co-founded and co-led the NSF-sponsored Research Coordination Network (RCN) on millimeter-wave wireless (2016-2019) for bringing together researchers from academia, industry, and government agencies to address critical technical challenges in the area.

13. From 2017-2019 I served as a Program director in the Electrical, Communications, and Cyber Systems (ECCS) Division of the Directorate of Engineering at the National Science Foundation. At the NSF, I managed existing

programs and initiated new research programs involving sensing, processing, and communication of information in all possible physical modalities, architectures, and technologies, including quantum information science and engineering. I actively contributed to three NSF-wide working groups: Electromagnetic Spectrum Management (ESM) working group, and the working groups of two of the 10 NSF Big Ideas: i) Quantum Leap and ii) Harnessing the Data Revolution. In particular, I co-led the team that developed the NSF solicitation for Quantum Leap Challenge Institutes (Feb 2019) in response to the National Quantum Initiative (NQI) Act signed in December 2018.

14. I have a demonstrated history (25 yrs.) of leading an interdisciplinary research and development group at the forefront of foundational and technological innovations in wireless communication and sensing. Physics-based accurate and computationally tractable system modeling has been a key underlying theme in my work, spanning communication & sensor networks, multipath propagation over highly dynamic environments, wideband MIMO systems, mm-wave and THz wireless, and prototype development (hardware & software).

15. My technical background, experience and skills are directly relevant to the subject matter in this case. The modeling, analysis and processing of information bearing signals and waves, including transmission and reception through antennas and antenna arrays, and propagation over channels, has been an underlying theme

throughout my career. In particular, I have extensive experience in the conception, modeling, development and analysis of techniques and algorithms for processing and filtering of signals from an array of sensors or antennas, including beamforming, interference and noise suppression, and adaptive filtering methods. While most of my work has focused on electromagnetic signals, the underlying physics and mathematics are very similar to acoustic signals.

II. COMPENSATION

16. My compensation for time worked on this proceeding is not dependent on any issues related to the ’611 Patent, the outcome of this proceeding, or the substance of my opinions. My compensation for time worked on this proceeding is at my customary rate of $200 per hour. I have no financial interest in, or affiliation with, the Patent Owner or any of the real parties in interest.

III. MATERIALS CONSIDERED

17. In providing my technical review, analysis, insights, and opinions, I have considered the ’611 Patent and its prosecution history.

18. I have also considered the Petition filed by the Petitioner in this proceeding and the relevant exhibits relied on by Petitioner, including the expert declaration submitted by Dr. Thomas Kenny (“Ex. 1003”).

19. I have also considered my own experience and knowledge, as discussed above and described more fully in my CV, in areas including signal processing, electrical engineering, and other related technologies.

IV. LEGAL PRINCIPLES

20. I understand that a patent claim is unpatentable as "obvious" if the subject matter of the claim as a whole would have been obvious to a person of ordinary skill in the art (POSITA) as of the time of the invention at issue.

21. I understand that the use of "the person of ordinary skill" rubric is to prevent one from improperly, in the present day, using hindsight to decide whether a claim is obvious.

22. I understand that the following factors must be evaluated to determine whether the claimed subject matter is obvious: (1) the scope and content of the prior art; (2) the difference or differences, if any, between the scope of the patent claim and the scope of the prior art; and (3) the level of ordinary skill in the art at the time of the invention.

23. I understand that certain secondary considerations, such as commercial success, skepticism of experts, surprise, and copying, may provide evidence of non-obviousness. I further understand that such considerations are often the most probative and determinative of obviousness or non-obviousness.

24. I understand that I must construe a claim in accordance with the ordinary and customary meaning of the language of such claim as understood by one of ordinary skill in the art and the prosecution history pertaining to the patent.

V. LEVEL OF SKILL IN THE ART

25. I understand that I should perform my analysis from the viewpoint of a person of ordinary skill in the art. I understand that this hypothetical person of ordinary skill in the art is considered to have the normal skills of a person in a certain technical field. I understand that factors that may be considered in determining the level of ordinary skill in the art include: (1) the education level of the inventor; (2) the types of problems encountered in the art; (3) the prior art solutions to those problems; (4) rapidity with which innovations are made; (5) the sophistication of the technology; and (6) the education level of active workers in the field.

26. In my opinion, a person of ordinary skill in the art would have a bachelor's degree in computer engineering, computer science, electrical engineering, mechanical engineering, or a similar field, and approximately three years of industry or academic experience in a field related to acoustics, speech recognition, speech detection, or signal processing. Work experience can substitute for formal education and additional formal education can substitute for work experience.

VI. THE CLAIMED INVENTION OF THE '611 PATENT

27. I have reviewed the ’611 Patent, entitled ACOUSTIC VOICE ACTIVITY DETECTION (AVAD) FOR ELECTRONIC SYSTEMS (Ex. 1001). It was issued on December 4, 2012, and was filed on October 26, 2009.

28. The ’611 Patent discloses and claims systems and devices for acoustic voice activity detection in microphone arrays. The claimed inventions “use microphones to generate virtual directional microphones which have very similar noise responses and very dissimilar speech responses.” Furthermore, the “ratio of the energies of the virtual microphones is then calculated over a given window size and the ratio can then be used with a variety of methods to generate a VAD signal. The virtual microphones can be constructed using either an adaptive or a fixed filter”. Ex. 1001 Abstract.

29. Figures 4 and 3 of the ’611 Patent provide illustrative embodiments for creating the virtual microphone signals, V_1 and V_2, respectively, from two omnidirectional physical microphone signals (O_1 and O_2).

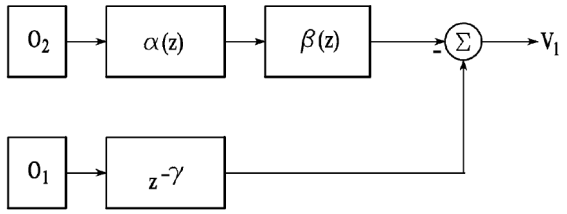

FIG.4

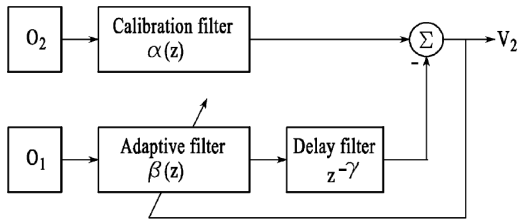

FIG.3

'611 Patent, Figs. 3, 4.

30. The '611 Patent explains that "It is assumed that O_1 is closer to the speech source (the user's mouth)" *Id*. 4:64-65. In the above Figures α(z) and β(z) represent filters, where β(z) can be fixed or adaptive *Id*. 6:17-18.

31. The relationship of V1 and V2 can be described in the digital frequency domain (z variable) as:

$$V_1(z) = -\beta(z)\alpha(z)O_2(z) + O_1(z)z^{-\gamma}$$

$$V_2(z) = \alpha(z)O_2(z) - \beta(z)O_1(z)z^{-\gamma}$$

Id. 5:23-35. In the above equations (and Fig. 3 and Fig. 4 from Ex 1001), "α(z) is a calibration filter used to compensate O_2's response so that it is the same as O_1, β(z) is a filter that describes the relationship between O_1 and calibrated O_2 for speech, and Y is a fixed delay that depends on the size of the array" *Id*. 5:29-33.

32. Ideally the microphones O_1 and O_2 are assumed to be calibrated so that "their response to a source located the same distance away was identical for both amplitude and phase." Ex 1001, 28:54-58. However, this is not always feasible in

practice and the calibration filter α(z) can be determined using adaptive algorithms, for example, so that in the presence of speech only signals (with no or low levels of noise) the microphone signals O_1 and O_2 satisfy the relationship $O_1(z) = \alpha(z)\, O_2(z)$. Ex. 1001 28:58-29:27.

33. After the calibration filter α(z) is determined, the filter β(z) can be determined, either from the geometry of microphones relative to the target speech source, or, in the claimed embodiments, by using an adaptive filter algorithm to satisfy the relationship:

$$\tilde{\beta}(z) = \frac{a(z)O_2(z)}{z^{-v}O_1(z)}$$

Ex. 1001 5:53-6:11.

34. The Voice Activity Detection (VAD) is based on computing the ratio R:

$$R = \frac{\|V_1(z)\|}{\|V_2(z)\|} = \sqrt{\frac{\left(-\tilde{\beta}(z)\alpha(z)O_2(z) + O_1(z)z^{-v}\right)^2}{\left(\alpha(z)O_2(z) - \tilde{\beta}(z)O_1(z)z^{-v}\right)^2}}$$

where "double bar indicates norm and again any size window may be used. If $\tilde{\beta}(z)$ has been accurately calculated, the ratio for speech should be relatively high (e.g., greater than approximately 2) and the ratio for noise should be relatively low (e.g., less than approximately 1.1)." Ex. 1001 6:20-32. If the ratio R is above a

threshold, speech is present, otherwise speech is absent. Ex 1001, Fig. 5 (510). "Many techniques known to those skilled in the art (e.g., smoothing, etc.) can be used to make R more amenable to use in generating a VAD and the embodiments herein are not so limited." Ex. 1001, 6:38-41.

VII. CLAIM CONSTRUCTION

35. I understand that claim terms are to be given their plain and ordinary meaning as a POSITA would have understood them in light of the specification and prosecution history.

36. In my opinion the term "filter that describes a relationship for speech between the first physical microphone and the second physical microphone" would have been understood by a POSITA at the time of the invention as "A filter that alters the magnitude of a signal based on the relative responses to speech of the first and second physical microphones." This construction is consistent with the plain and ordinary meaning of the term as used in the specification.

37. The specification describes three different filters, a calibration filter ($\alpha(z)$), a delay filter ($z^{-\gamma}$), and the filter that describes a relationship for speech ($\beta(z)$). '611 Patent 5:20-51, Fig. 3, Fig. 4. The delay γ is "a fixed delay that depends on the size of the array." '611 Patent, 5:32-33.

38. Figure 3 illustrates the relationship:

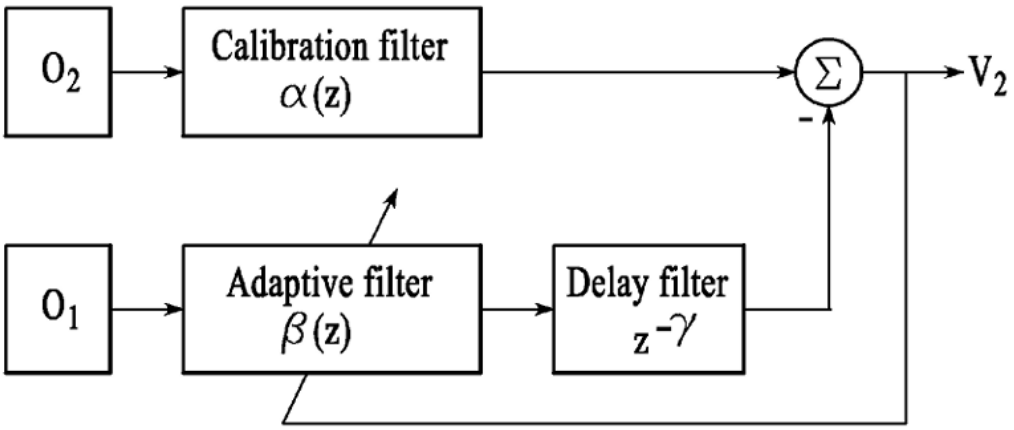

FIG.3

39. The specification further specifically identifies β(z) as the filter describing the relationship for speech. '611 Patent, 5:31-32 ("β(z) is a filter that describes the relationship between O_1 and calibrated O_2 for speech"). The specification provides two methods to calculate β(z): 1) as a function of the distance between each microphone and the user's mouth ('611 Patent, 5:52-59); and 2) adaptively (*id.*, 6:1-16).

$$\beta(z) = \frac{d_1}{d_2} = \frac{d_1}{d_1 + d} \qquad \tilde{\beta}(z) = \frac{a(z)O_2(z)}{z^{-v}O_1(z)}$$

40. In either case, the β(z) compensates for the difference in response to speech of the two microphones, not the temporal difference. By increasing or decreasing the magnitude of the filtered signal, the filter adjusts the signal to account

for the relative strengths of the signal received—i.e., the closer microphone is attenuated to the same speech level received at the farther microphone.

41. Indeed, the separate delay, which is defined in terms of distance and the speed of sound, compensates for the temporal difference based on the distance between the microphones. '611 Patent, 5:35-45.

$$\gamma = \frac{d}{c}$$

42. The constant d is the distance between the two microphones. '611 Patent, 5:43-44; 4:66-67 ("If the microphones and the user's mouth are all on a line, then $d=2d_0$, the distance between the microphones."). The constant c is "the speed of sound in air." *Id.*, 5:43-44.

43. In my opinion, therefore, a POSITA, reading the claim in light of the specification, would therefore understand that the "filter that describes a relationship for speech between the first physical microphone and the second physical microphone" refers to "a filter that alters the magnitude of a signal based on the relative responses to speech of the first and second physical microphones."

VIII. THE ALLEGED PRIOR ART

A. Avendano '880 (U.S. Patent No. 8,194,880)

44. I have reviewed U.S. Patent No. 8,194,880 ("Avendano") (Ex. 1005). Avendano was filed on January 29, 2007 and issued on June 5, 2012.

45. Avendano describes "systems and methods for utilizing inter-microphone level differences (ILD) to attenuate noise and enhance speech". Avendano, Abstract. In exemplary embodiments, "primary and secondary acoustic signals are received by omni-directional microphones and converted into primary and secondary electric signals". *Id.* Further, "a differential microphone array module processes the electric signals to determine a cardioid primary signal and a cardioid secondary signal." *Id.* The cardioid signals are "filtered through a frequency analysis module" and "Energy levels of the signals are then computed, and the results are processed by an ILD module using a non-linear combination to obtain the ILD." In exemplary embodiments, "the non-linear combination comprises dividing the energy level associated with the primary microphone by the energy level associated with the secondary microphone. The ILD is utilized by a noise reduction system to enhance the speech of the primary acoustic signal." *Id.*

46. Fig. 4a in Avendano represents an illustrative embodiment utilized in the Petition and the Declaration of Dr. Kenny.

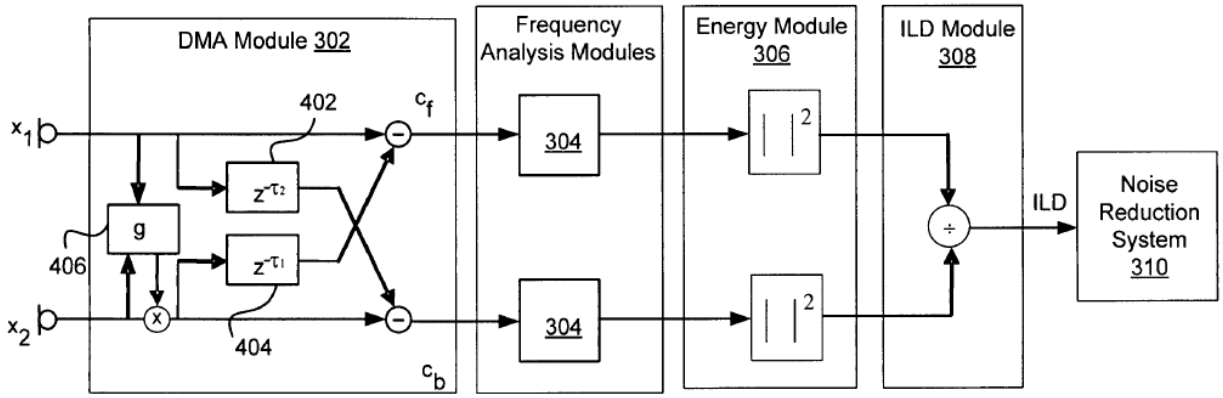

FIG. 4a

Id., Fig. 4a; Pet., 10; Ex. 1003, ¶ 60.

47. Avendano uses two "delay nodes" 402 and 404 to delay the primary and secondary acoustic signals. Avendano, 5:15-24. The gain module 406 computes a gain factor to equalize the signal levels. *Id.*, 5:36-39. The two subtraction units then create cardioid primary (C_f) and cardioid secondary (C_b) signals. *Id.*, 5:25-35.

48. Following the DMA Module, the signals are processed through a frequency analysis module 304. *Id.*, 5:40-48. The frequency analysis module may filter the signals. *Id.* The system then calculates the power estimates associated with each signal, and then uses those estimates to generate the inter-microphone level differences. *Id.*, 6:7-20.

B. Visser (U.S. Patent No. 7,464,029)

49. I have reviewed U.S. Patent No. 7,464,029 ("Visser") (Ex. 1006). Visser was filed on July 22, 2005 and issued on December 9, 2008.

50. Visser discusses "a signal separation process [that] is associated with a voice activity detector." Visser, Abstract. Notably, "[t]he voice activity detector is a two-channel detector, which enables a particularly robust and accurate detection of voice activity." *Id.* Visser uses Independent Component Analysis (ICA) to separate speech signals from noise sources. Visser, 3:3-20. Visser's method is also described as blind source separation. *Id.* Fig. 5 from Visser shown below is an illustration of the application of the ICA or blind source separation.

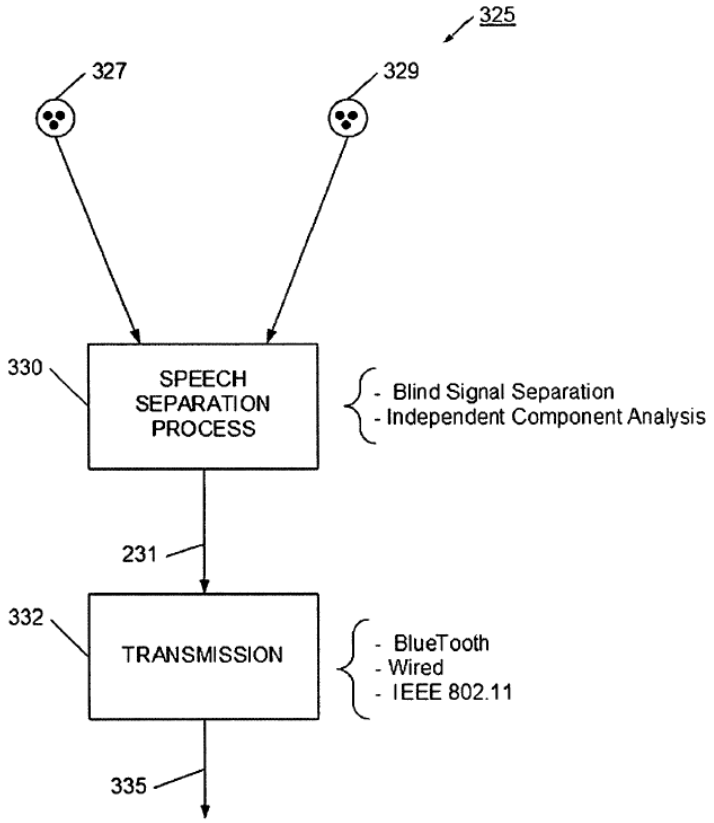

FIG. 5

51. Visser includes multiple embodiments. Petitioner relies on a specific separation process which generates two channels: one is noise-dominant and the

other is a speech signal. Visser, 16:3-17:67, Fig. 10; *see* Pet., 15-22. While Petitioner mentions a Visser embodiment with a voice activity detector (VAD), it does not rely on the VAD or argue that it would be part of its combination. Pet., 16.

52. In the relevant embodiment, Visser uses filters w_{21} and w_{12} in a feedback configuration to separate noise and speech. As shown in Fig. 10 and discussed in Visser's specification, the filter outputs are fed back and combined with the input microphone signals. After repeated feedback, the desired two output channels are generated. Visser, 16:3-27.

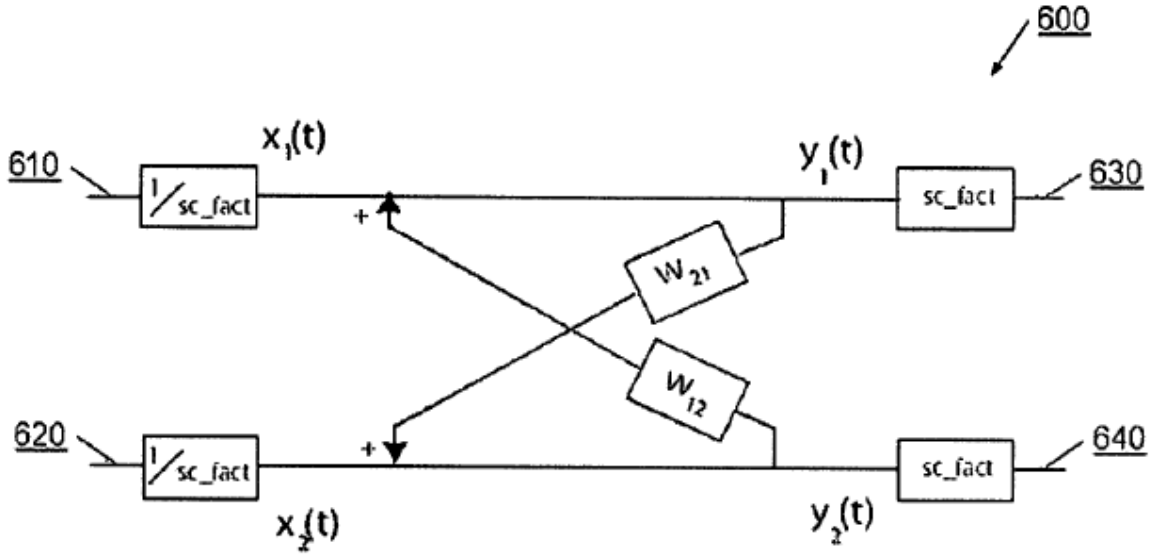

FIG. 10

53. In Figure 10, input signals X_1 and X_2 are received from the input channels 610 and 620. Visser, 17:29-50. The infinitive impulse response filters w_{21} and w_{12} are applied to each signal to produce the channels of separated signals. *Id.*

54. As Visser explains, the filters are infinitive impulse response filters whose output signals are "fed back into the filter as at least part of an input signal." Visser, 17:51-54. This is in contrast to finite impulse response filters which do not feed back the output signals. *Id.* "In a most simplified form, the cross filters w_{21} and w_{12} are gain factors with only one filter coefficient per filter, for example a delay gain factor for the time delay between the output signal and the feedback input signal and an amplitude gain factor for amplifying the input signal." *Id.*, 17:56-62.

C. Avendano/Visser Combination

55. Petitioner asserts that a POSITA would "incorporate Visser's 'ICA process' into Avendano's system to further enhance the differences in speech content in Avendano's two processed signals, such that speech is detected with a greater degree of accuracy, 'even in a changing acoustic environment.'" Pet., 17.

56. Petitioner then specifies that the only portions of Visser to be incorporated into Avendano are "Visser's 'cross filters w21 and w12.'" Pet. 20. Petitioner illustrates its combination with a modified Fig. 4a from Avendano:

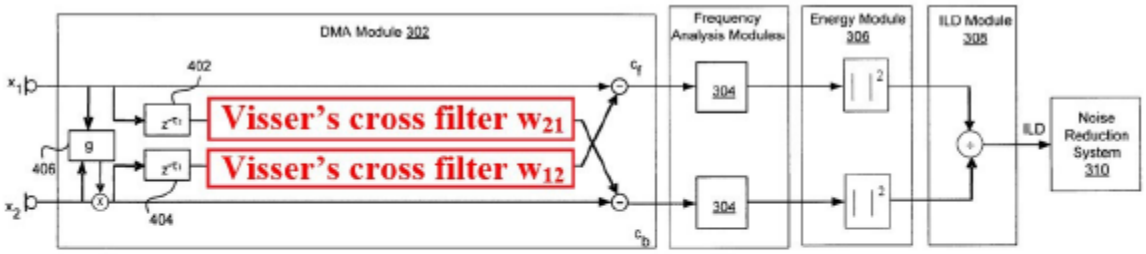

FIG. 4a

Ex. 1005, FIG. 4a (modified)

Pet., 21.

IX. PETITIONER'S COMBINATIONS DO NOT RENDER ANY CLAIM OBVIOUS

A. GROUND 1: The Combination of Avendano and Visser Does Not Render Obvious Claims 1-7, and 25-28

57. In my opinion, the combination of Avendano and Visser does not render claims 1-7, and 25-28 of the '611 Patent obvious.

1. Petitioner's Combination Does Not Disclose or Render Obvious "forming a filter that describes a relationship for speech between the first physical microphone and the second physical microphone" as Required by All Challenged Claims

58. All Challenged Claims require "forming a filter that describes a relationship for speech between the first physical microphone and the second physical microphone." I understand that Petitioner argues that this limitation is disclosed or rendered obvious by Avendano alone, or, alternatively, the combination of Avendano and Visser. I disagree.

i. Avendano's Delay Node Does Not Render Obvious The Claimed Filter

59. The Petition first argues that Avendano discloses this limitation via its "delay node 402." Pet. at 25-28. As I explain above, under the proper construction, the claim requires a filter that alters the magnitude of a signal based on the relative responses to speech of the first and second physical microphones. Avendano's delay node, even if implemented as an all-pass filter, does not meet this requirement.

60. The only relationship for speech that Petitioner identifies is "a temporal relationship for speech between the first and second signals." Pet., 25. Petitioner describes this relationship in strikingly similar terms to the '611 Patent's delay filter:

> In Avendano, "due to a space difference between the microphones," and because the speed of sound propagation in air is widely known to be approximately 330 m/s, there will be a "difference in times of arrival of the signal from a speech source to the microphones."

Pet., 25.

61. Simple mathematics shows that the temporal relationship between the microphones is defined as the distance between them divided by the speed of sound in air. That is exactly the relationship handled by the separate delay filter in the '611 Patent. '611 Patent, 5:35-51.

$$\gamma = \frac{d}{c}$$

62. The dependent claims to claim 1 further make clear that a POSITA would not interpret "filter that describes a relationship for speech…" as the delay node. Claim 7 recites "comprising applying a delay to the first intermediate signal." The first intermediate signal, as defined in claim 1, is the signal to which the filter was applied. Applying two delays in succession is equivalent to applying a single delay for the sum of those two delays, and a POSITA would be aware of that. Thus, a POSITA would realize that the filter cannot be a delay filter.

63. Petitioner's contradictory contentions regarding claim 7, which recites "the method of claim 5, comprising applying a delay to the first intermediate signal," illustrate the point. Rather than show that a POSITA would apply two delays in succession—they would not—Petitioner argues that Avendano's delay node 402 applies the claimed delay. Pet., 38-40. Petitioner's argument ignores the requirement that claim 7's delay must be applied to the intermediate signal—i.e., the signal that has already been filtered.

64. Unlike the claimed β(z) filter, the delay node does not change the magnitude of the signal passing through it. It simply inserts a delay to account for the distance between the microphones.

65. Accordingly, in my opinion, Avendano does not disclose or render obvious this limitation.

ii. The Petition Fails to Show that a POSITA Would Have Been Motivated to Make the Avendano/Visser Combination

66. In addition to its theory regarding Avendano alone, Petitioner also argues that the Avendano/Visser Combination would render this limitation obvious. I disagree.

67. In my opinion, a POSITA would not make the combination because it would not function for its intended purpose and because Visser teaches away from Petitioner's combination.

68. As I explain above, while Petitioner casts its combination as incorporating "Visser's 'ICA or BSS processing function' into Avendano's system", its proposed combination includes only Visser's w_{12} and w_{21} filters. Pet., 15-22, 26 ("Avendano's system would include Visser's cross filters w_{12} and w_{21}…"). Petitioner does not identify any other portion of Visser that would be included. *Id.* Petitioner illustrates its combination with a modified Avendano Figure 4a:

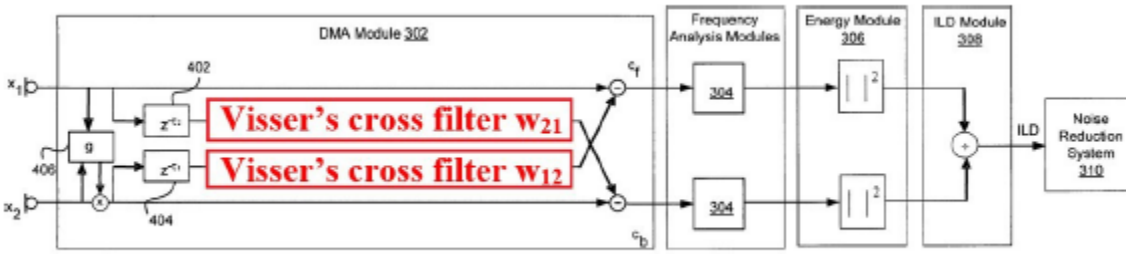

Pet., 27. Petitioner further references Visser Fig. 10 as evidence that w_{12} and w_{21} describe a relationship for speech. Pet., 26-28; *see also* Pet., 19-20.

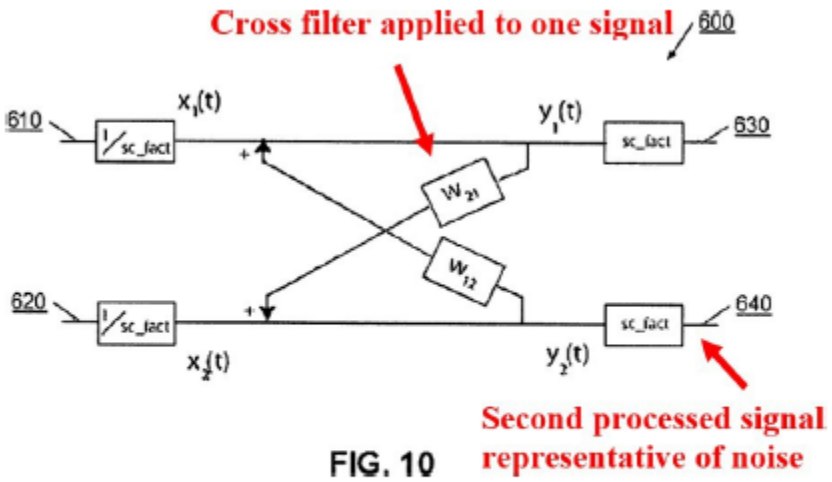

FIG. 10

Ex. 1006, FIG. 10

Pet., 20.

69. Visser teaches that its filters utilize feedback to effectively separate noise and speech. Visser, 17:56-62 (describing figure 10 and noting "In a most simplified form, the cross filters W_{21} and W_{12} are gain factors with only one filter coefficient per filter, for example a delay gain factor for the time delay between the output signal and the ***feedback input signal*** and an amplitude gain factor for amplifying the input signal" (emphasis added)); 16:15-19 ("***Following repeated feedback of signals***, two channels of output signals are produced, with one channel dominated with noise so that it consists substantially of noise components, while the

other channel contains a combination of noise and speech." (emphasis added)). Figure 10 demonstrates the feedback loop:

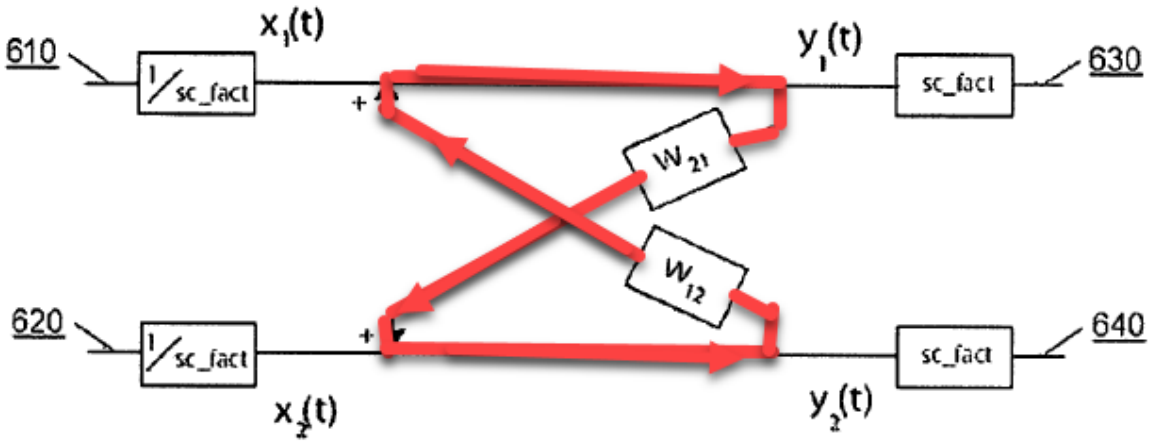

FIG. 10

Visser Figure 10 (annotated)

70. As shown above, signals travel through w_{21} to the lower path, then travel through w_{12} back to the upper path and then back through w_{21}. There is no disclosure of any other feedback mechanism in Visser. As discussed above, the feedback is utilized to produce the separated speech and noise channels that Petitioner relies on for its motivation to combine. Visser, 16:15-19; *see* Pet., 17-20 ("a POSITA would have been motivated to incorporate Visser's 'ICA process' into Avendano's system to further enhance the differences in speech content in Avendano's two processed signals, such that speech is detected with a greater degree of accuracy, 'even in a changing acoustic environment.'").

71. The Petition also recognizes that Visser's filters require feedback. Pet., 17 (describing Visser as `using a cross filter having "a delay gain factor for the time delay between the output signal and the feedback input signal"').

72. In my opinion, therefore, Visser's disclosure teaches away from removing the feedback circuitry from the W_{21} and W_{12} filters as Petitioner suggests. Moreover, Visser explains that this circuitry is required for its filters to work for their intended purpose.

73. While Petitioner strips away Visser's feedback structure, it does not provide any testimony or other evidence that Visser's filters would function for their intended purpose without Visser's feedback. A POSITA would not find that the filters would work without the feedback circuitry.

74. Accordingly, in my opinion, a POSITA would not make Petitioner's proposed combination.

B. GROUND 2: Avendano, Visser, and Bisgaard Do Not Render Obvious Claims 8-16, 23-24

75. Claims 8-16 and 23-24 are dependent on claim 1. The Petition relies on its Ground 1 arguments for the limitations of claim 1.

76. The Petition does not argue that the addition of Bisgaard remedies its Ground 1 deficiencies.

77. Therefore, in my opinion, no claims are rendered obvious under Ground 2.

C. GROUND 3: Avendano, Visser, Bisgaard, and Hou Do Not Render Obvious Claims 17-19

78. Claims 17-19 are dependent on claim 1. The Petition relies on its Ground 1 arguments for the limitations of claim 1.

79. The Petition does not argue that the addition of Bisgaard or Hou remedies its Ground 1 deficiencies.

80. Therefore, in my opinion, no claims are rendered obvious under Ground 3.

D. GROUND 4: Avendano, Visser, Bisgaard, Hou, and "Frequency Art" Do Not Render Obvious Claims 20-22

81. Claims 20-22 are dependent on claim 1. The Petition relies on its Ground 1 arguments for the limitations of claim 1.

82. The Petition does not argue that the addition of Bisgaard, Hou, or the "Frequency Art" remedies its Ground 1 deficiencies.

83. Therefore, in my opinion, no claims are rendered obvious under Ground 4.

X. CONCLUSION

84. In signing this declaration, I recognize that the declaration will be filed as evidence in a contested case before the Patent Trial and Appeal Board of the

United States Patent and Trademark Office. I also recognize that I may be subject to cross-examination in the case and that cross-examination will take place within the United States. If cross-examination is required of me, I will appear for cross-examination within the United States during the time allotted for cross-examination.

I hereby declare that all statements made herein of my own knowledge are true and that all statements made on information and belief are believed to be true; and further that these statements were made with the knowledge that willful false statements and the like so made are punishable by fine or imprisonment, or both, under Section 1001 of Title 18 of the United States Code.

Executed this 19th day of October, 2023

Respectfully submitted,

Akbar M Sayeed

_____