NUHN

A FAMILY BUSINESS SINCE 1902

LAGOON CRAWLER

PARTS BOOK

2018 Model
Revision 1
8/23/18

NUHN15000007311

Center Frame Float Assembly

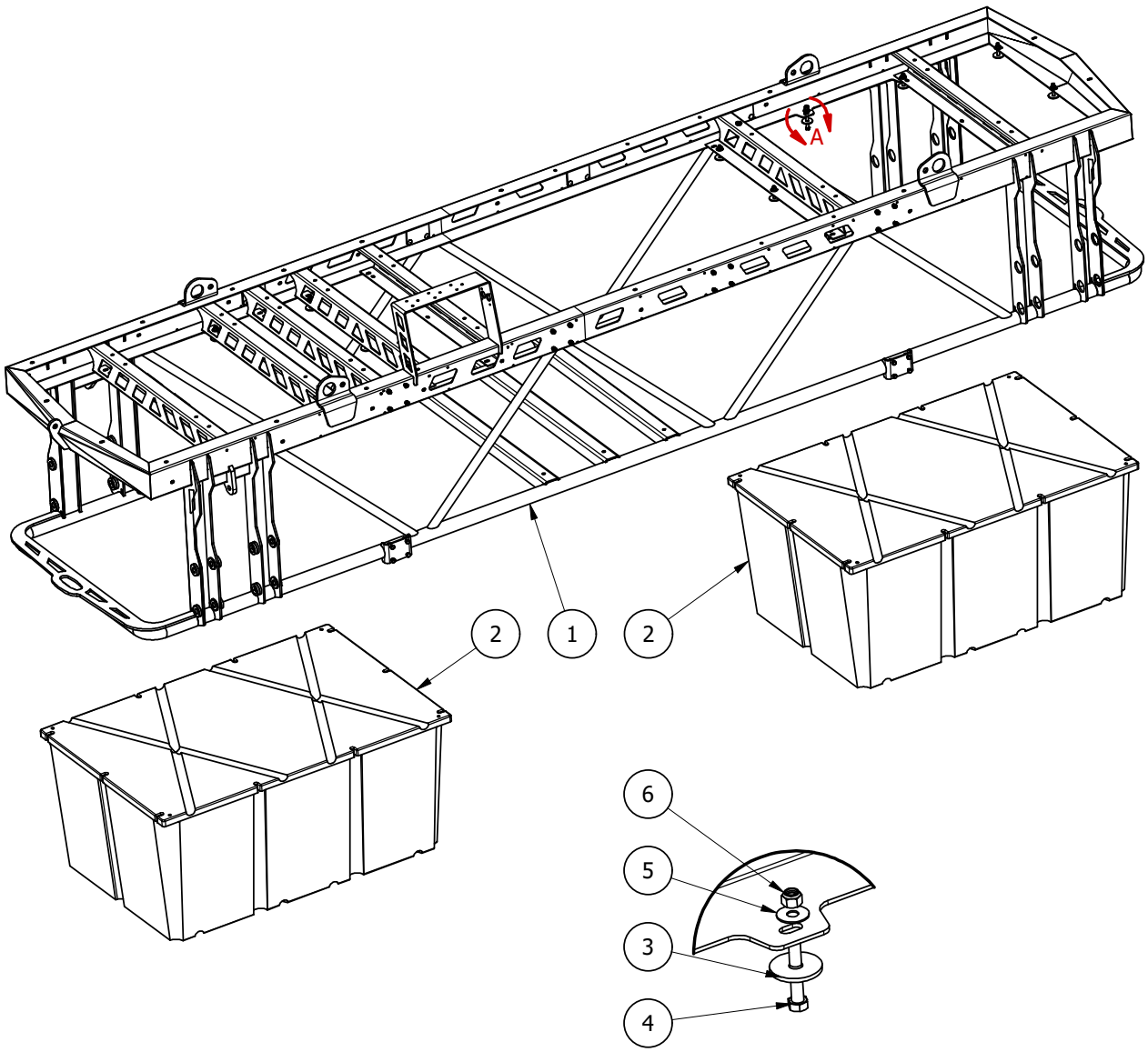

PARTS LIST

ITEM	QTY	PART NUMBER	TITLE
1	1	106-826	2018 Lagoon Crawler - Center Frame
2	2	106-497	Pontoon Float - 4' x 6' x 32"
3	20	100-845	Crawler - Float Washer
4	20	100-980	Bolt - Hex Head - 0.5" x 3" - GR5
5	20	100-898	Washer - Flat - 0.5"
6	20	100-904	Nut - Nylock - 0.5"

Side-Float Sub-Assembly - Right

106-828

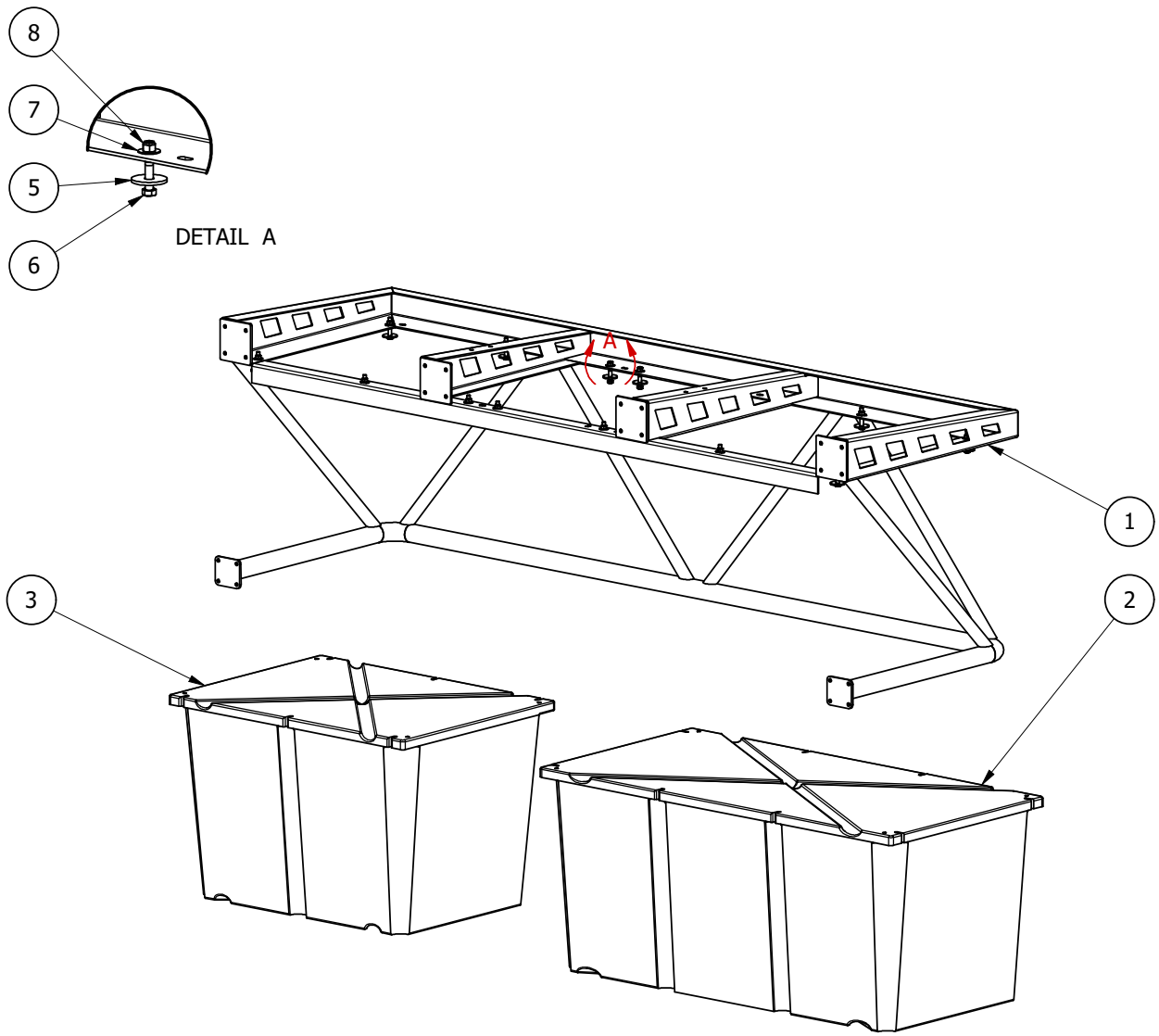

PARTS LIST

ITEM	QTY	PART NUMBER	TITLE
1	1	106-827	2018 Lagoon Crawler - Side Float Mounting Assembly
2	1	106-495	Pontoon Float - 3' x 6' x 32"
3	1	106-494	Pontoon Float - 3' x 4' x 32"
5	14	100-845	Crawler - Float Washer
6	14	100-980	Bolt - Hex Head - 0.5" x 3" - GR5
7	14	100-898	Washer - Flat - 0.5"
8	14	100-904	Nut - Nylock - 0.5"

Side-Float Sub-Assembly - Left 106-829

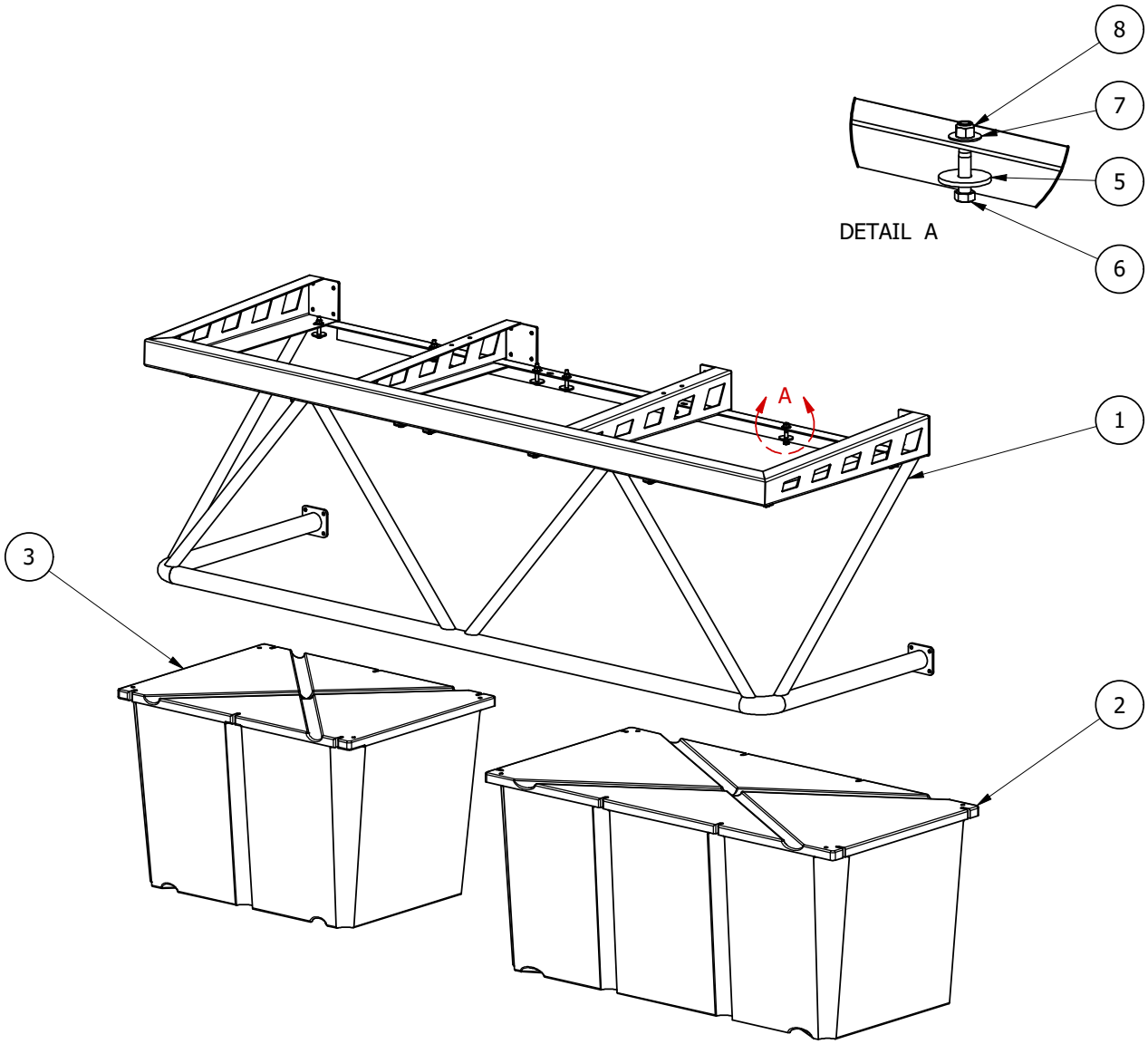

PARTS LIST

ITEM	QTY	PART NUMBER	TITLE
1	1	106-827	2018 Lagoon Crawler - Side Float Mounting Assembly
2	1	106-495	Pontoon Float - 3' x 6' x 32"
3	1	106-494	Pontoon Float - 3' x 4' x 32"
5	14	100-845	Crawler - Float Washer
6	14	100-980	Bolt - Hex Head - 0.5" x 3" - GR5
7	14	100-898	Washer - Flat - 0.5"
8	14	100-904	Nut - Nylock - 0.5"

Frame Assembly

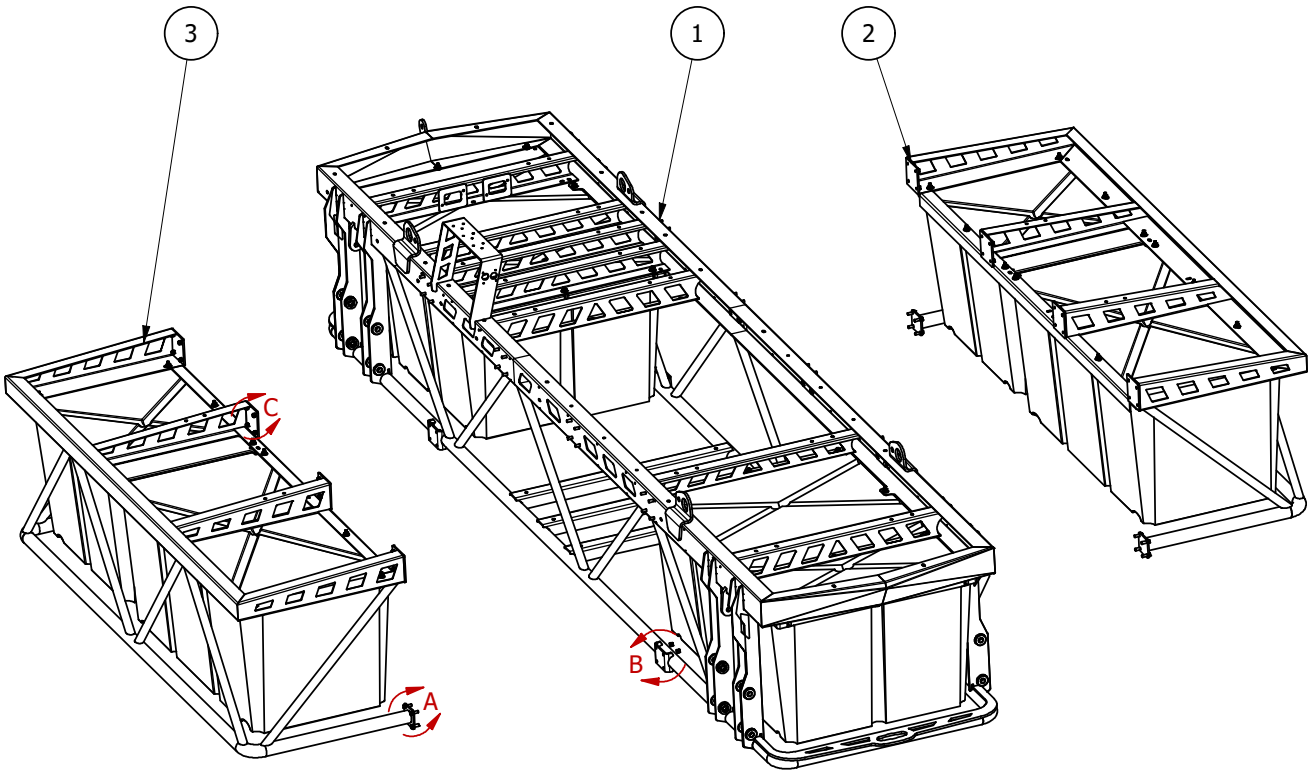

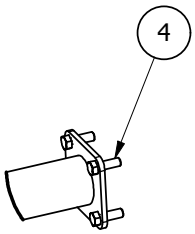

DETAIL A

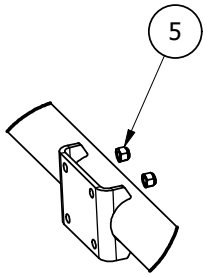

DETAIL B

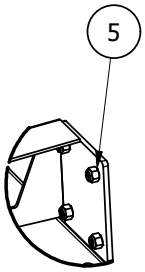

DETAIL C

PARTS LIST

ITEM	QTY	PART NUMBER	TITLE
1	1	106-826	2018 Lagoon Crawler - Center Frame
2	1	106-828	Side-Float Sub-Assembly - Right
3	1	106-829	Side-Float Sub-Assembly - Left
4	16	100-914	Bolt - Hex Head - 0.5" x 1.5" - GR5
5	48	100-904	Nut - Nylock - 0.5"

High Pressure Filter Bracket

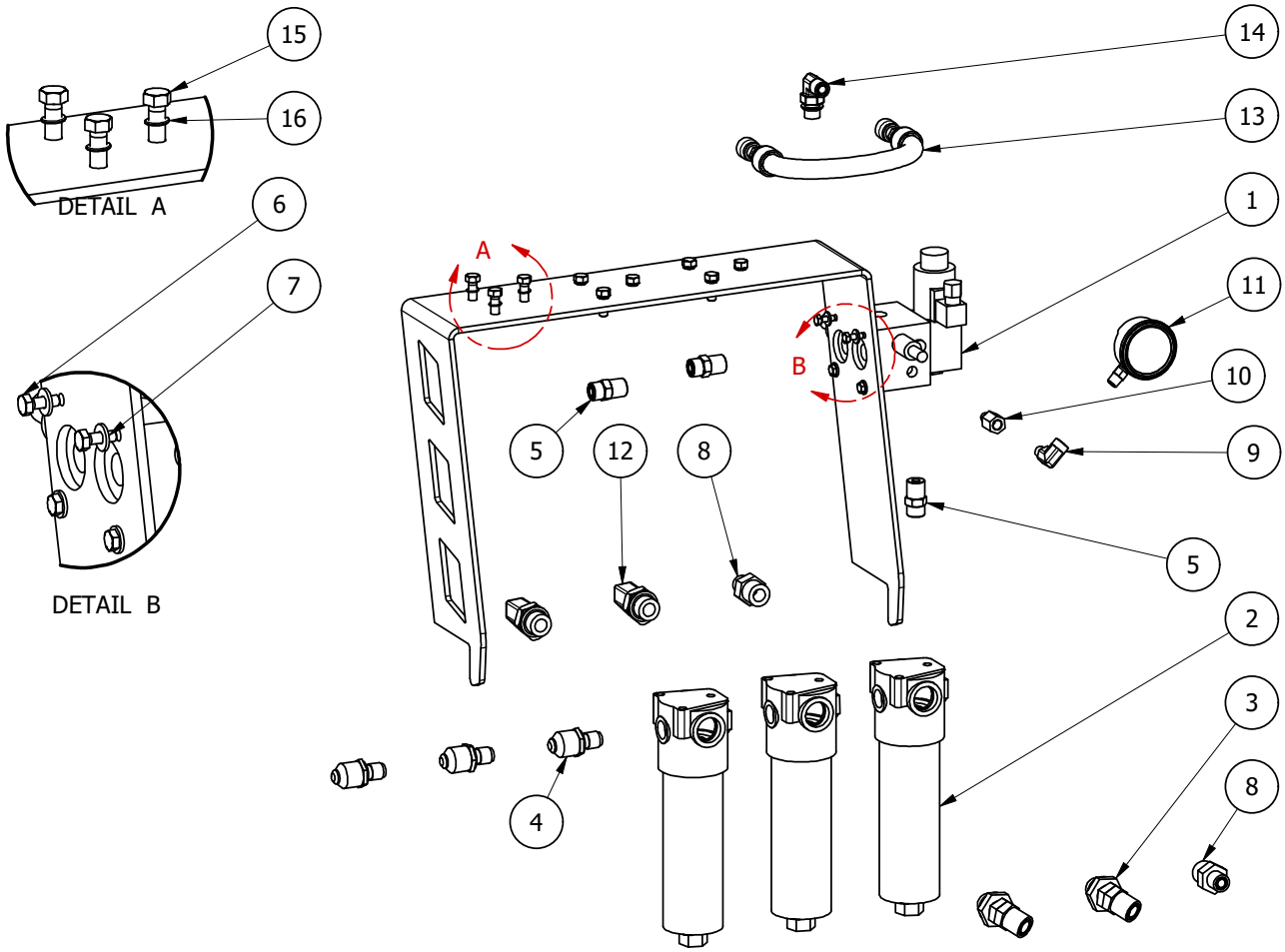

PARTS LIST

ITEM	QTY	PART NUMBER	TITLE
1	1	106-075	Hydraulic Clutch Actuator Block
2	3	104-002	Crawler - High Pressure Filter Assembly (with Filter)
3	2	104-449	Hyd. Adapter - 45° Elbow - #12 MORS x #12 MOR
4	3	104-520	Crawler - High Pressure Filter Indicator
5	3	104-457	Hyd. Adaptor - Straight - #8 MOR x #8 MORS
6	4	103-111	Box - Hex Head - 0.25" x 1" - GR5
7	4	101-019	Washer - Flat - 0.25"
8	2	105-648	Hyd. Adaptor - Straight - #12 MOR x #8 MORS
9	1	101-537	Hyd. Adaptor - 90° Elbow - #4 MP x #4 FP
10	1	105-674	Hyd. Adaptor - Straight - #4 MOR x #4 FP
11	1	105-655	Hystar - Guage - Down Pressure Guage 500Psi
12	2	104-814	Hyd. Adaptor - 90° Elbow - #12 MOR x #12 MORS
13	1	106-776	Hydraulic Hose Assembly - 2018 Crawler - #130
14	1	104-806	Hyd. Adapter - 90° Elbow - #8 MORS x #8 MOR
15	9	103-599	Bolt - Hex Head - 0.375" x 1" - GR8
16	9	101-188	Washer - Lock - 0.3125"

Double Counter Balance Valve Mounting

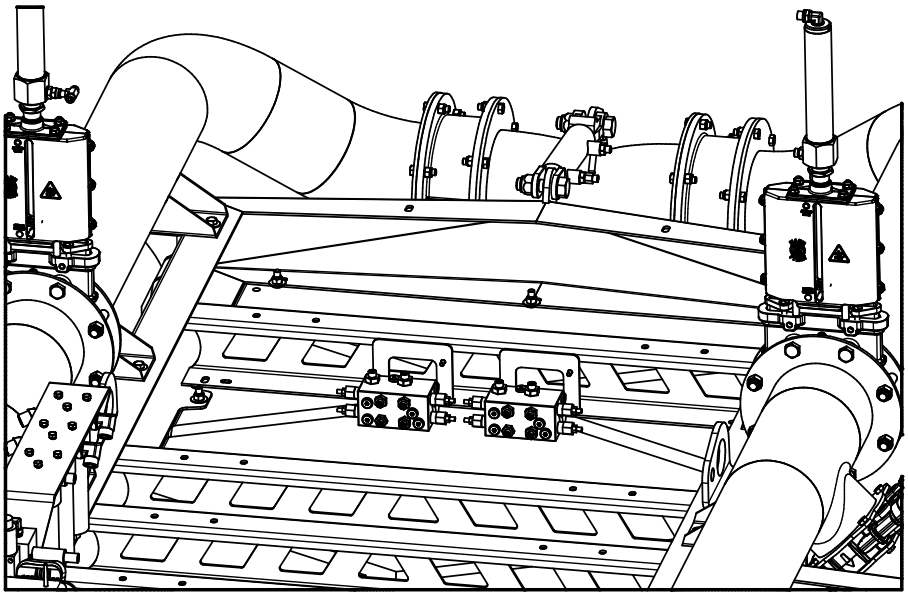

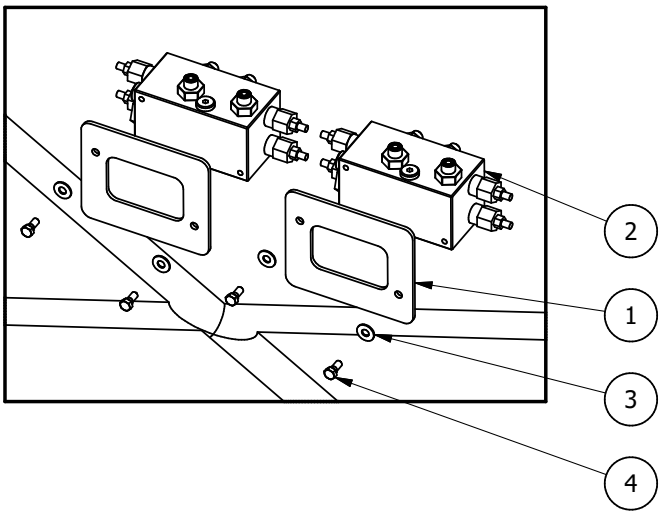

PARTS LIST

ITEM	QTY	PART NUMBER	TITLE
1	1	106-826	2018 Lagoon Crawler - Center Frame
2	1	104-233	Crawler - Lift and Steer Block Manifold CX-75
3	4	101-020	Washer - Flat - 0.3125"
4	4	103-144	Bolt - Hex Head - 0.3125" x 0.75" - GR5

Piping Structure

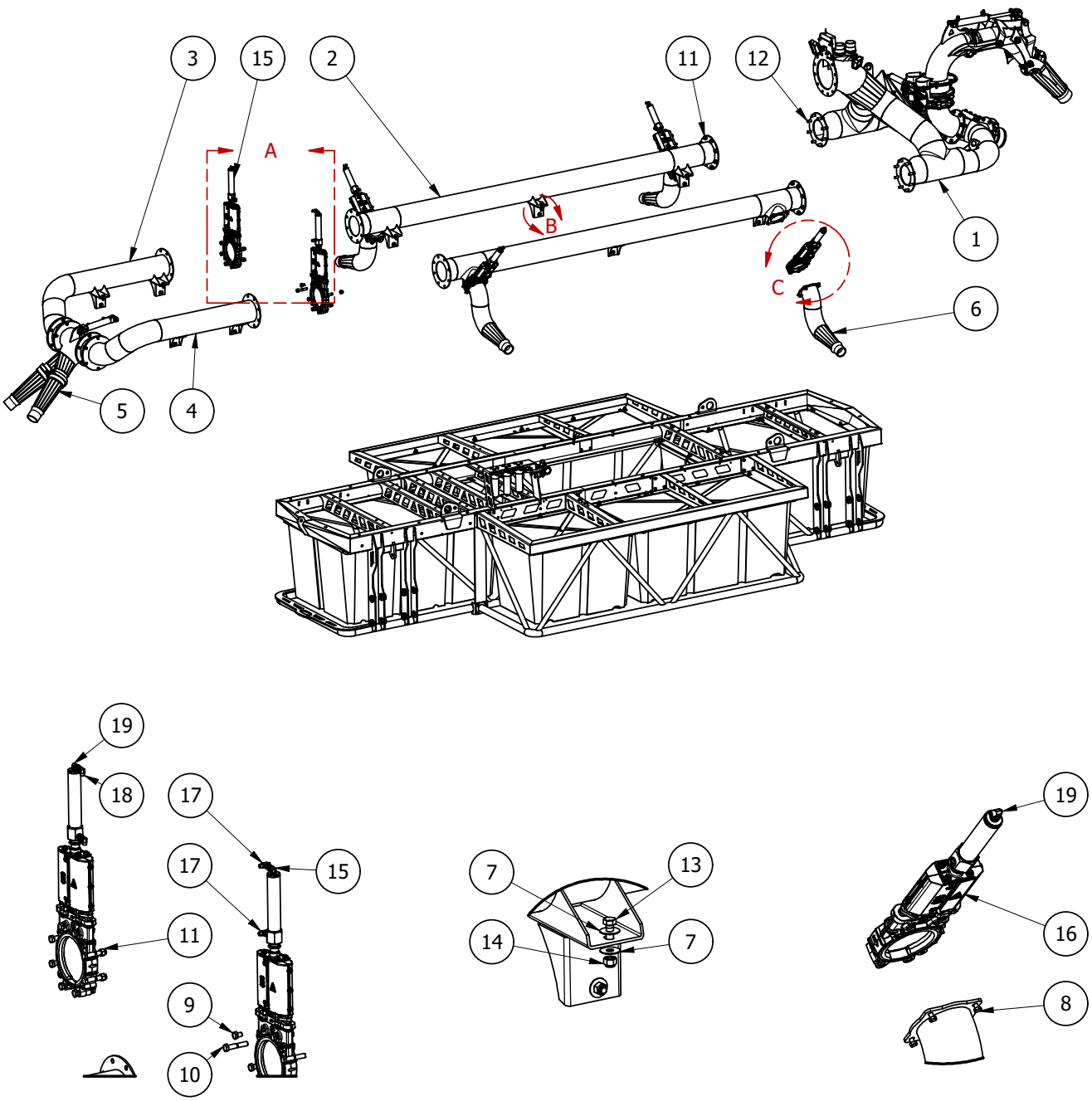

Piping Structure

PARTS LIST

ITEM	QTY	PART NUMBER	TITLE
1	1	106-879	2018 Lagoon Crawler Rear Pipe Assembly
2	2	106-541	8" Side Pipe With Flanges Assembly
3	1	106-543	Front Swivel Right Side Pipe Assembly
4	1	106-542	Front Swivel Left Side Pipe Assembly
5	2	100-796	Crawler - Nozzle - 6" to 4" High Pressure
6	4	106-521	Side Steering Nozzle
7	92	100-898	Washer - Flat - 0.5"
8	32	100-923	Bolt - Hex Head - M12 x 20 - 8.8
9	16	101-204	Bolt - Hex Head - 0.75" x 1" GR5
10	8	101-210	Bolt - Hex Head - 0.75" x 4" GR5
11	24	101-201	Nut - Nylock - 0.75"
12	16	101-206	Bolt - Hex Head - 0.75" x 2" - GR5
13	12	100-914	Bolt - Hex Head - 0.5" x 1.5" - GR5
14	12	100-904	Nut - Nylock - 0.5"
15	2	105-693	Metaltecnica Cast Valve - 8" ANSI - with Cylinder - with Discharge
16	4	105-694	Metaltecnica Cast Valve - 6" ANSI - with Cylinder - with Discharge
17	2	104-929	Hyd. Adaptor - Tee - #6 MORS x #6 MORS x #6 FORSX
18	2	101-567	Hyd. Adaptor - 90° Elbow - #8 FPX x #8 MP
19	6	107-002	Hyd. Adaptor - 90° Elbow - #6 MORS x M18 Metric Male

Boat Drive Assembly

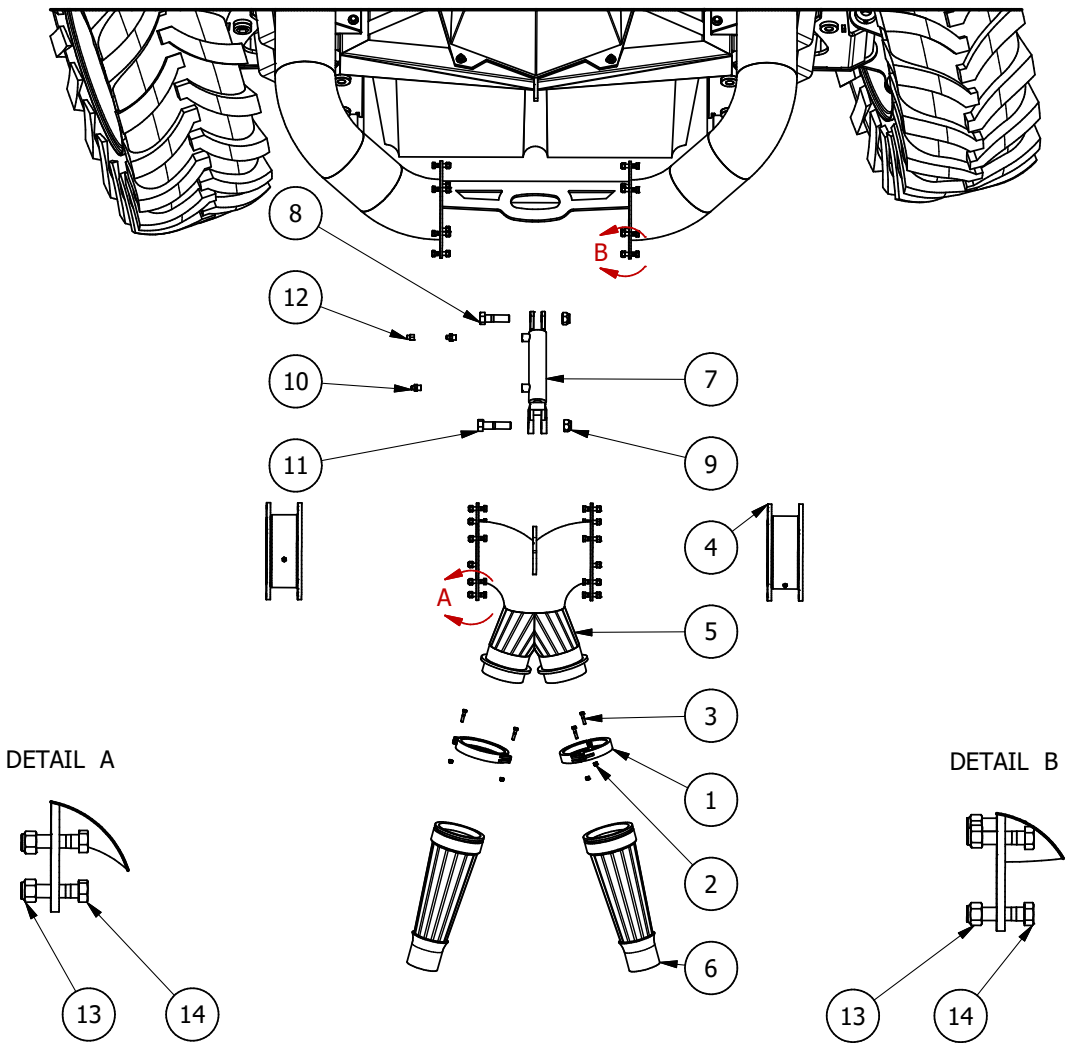

PARTS LIST

ITEM	QTY	PART NUMBER	TITLE
1	1	100-849	Clamp - 6" High Pressure
2	2	101-189	Nut - Nylock - 0.3125"
3	4	101-027	Bolt - Hex Head - 0.3125" x 1.5" - GR5
4	2	105-855	Boom Swivel - 8"
5	1	105-522	Dual Nozzle Assembly
6	2	100-796	Crawler - Nozzle - 6" to 4" High Pressure
7	1	102-759	Hyd. Cylinder - Welded - 2" x 6"
8	1	100-920	Bolt - Hex Head - 1" x 3.5" - GR5
9	2	100-907	Nut - Nylock - 1"
10	2	104-455	Hyd. Adapter - Straight - #4 MORS x #8 MOR
11	5	100-467	Bolt - Hex Head - 1" x 4" - GR5
12	1	104-443	Flow Restrictor - #4 MORS - 0.0475 Orifice
13	24	100-904	Nut - Nylock - 0.5"
14	24	100-915	Bolt - Hex Head - 0.5" x 1.75" - GR5

Return Elbow & Dual Oil Cans

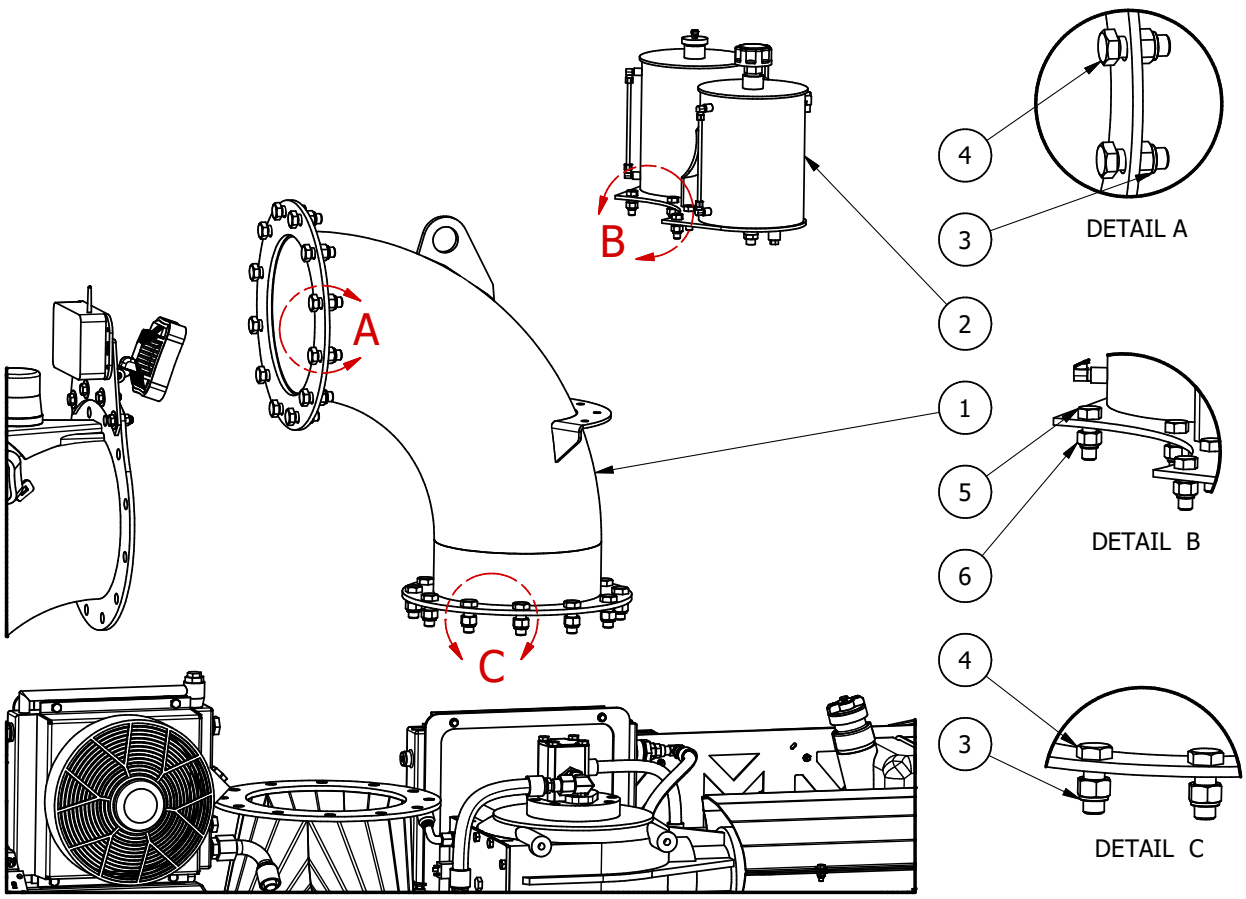

PARTS LIST

ITEM	QTY	PART NUMBER	TITLE
1	1	106-524	12" Return Pipe Elbow
2	1	106-523	Dual Oil Can Assembly
3	24	101-201	Nut - Nylock - 0.75"
4	24	101-206	Bolt - Hex Head - 0.75" x 2" - GR5
5	4	100-914	Bolt - Hex Head - 0.5" x 1.5" - GR5
6	4	100-904	Nut - Nylock - 0.5"

NUHN15000007321

Exhibit 2041
Bazooka v. Nuhn - IPR2023-01161
Page 11 of 51

Dual Oil Can Assembly

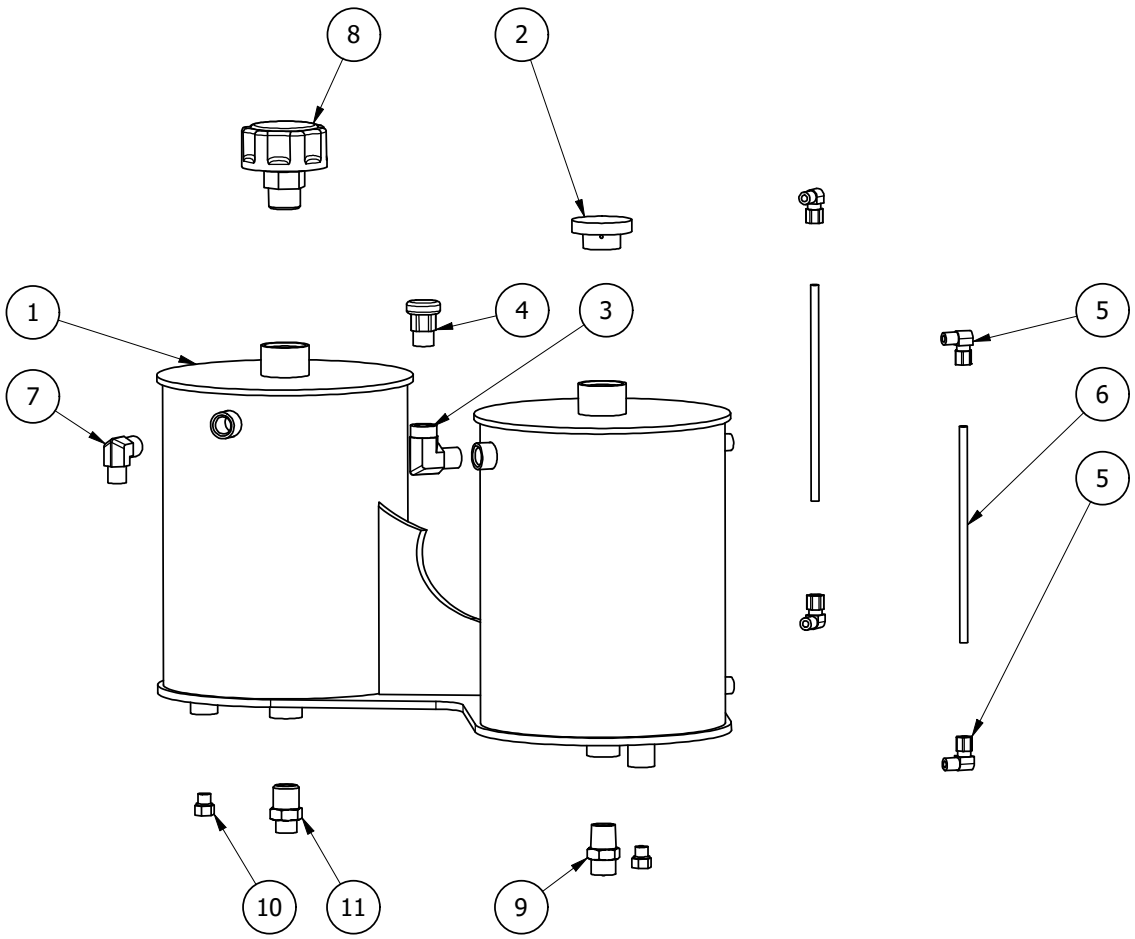

PARTS LIST

ITEM	QTY	PART NUMBER	TITLE
1	1	106-523	2018 Lagoon Crawler - Dual Oil Tanks
2	1	103-489	Vacuum Pump - Flush Port Cap
3	1	101-538	Hyd. Adaptor - 90° Elbow - #6 MP x #6 FP
4	1	103-809	Hyd. Fitting - 0.375" NPT Hooded Breather Plug
5	4	104-000	Hyd. Adaptor - 90° Elbow Compression - #4 Tube Connect Ferrule x #2 MP Brass
6	3	104-399	Tube Semi Rigid - Nylon 0.25"OD - 7"
7	1	104-451	Hyd. Adaptor - 90° Elbow - #6 MP x #6 MORS
8	1	105-192	Crawler - Filter Breather Cap with 5 Psi Relief
9	1	104-831	Hyd. Adaptor - Straight - #8 MORS x # 8 MP
10	2	104-077	Hyd. Fitting - Plug - #4 MOR Hex Socket
11	1	105-591	Hyd. Adaptor - Straight - #8 MP x #6 MORS

Module Fasteners

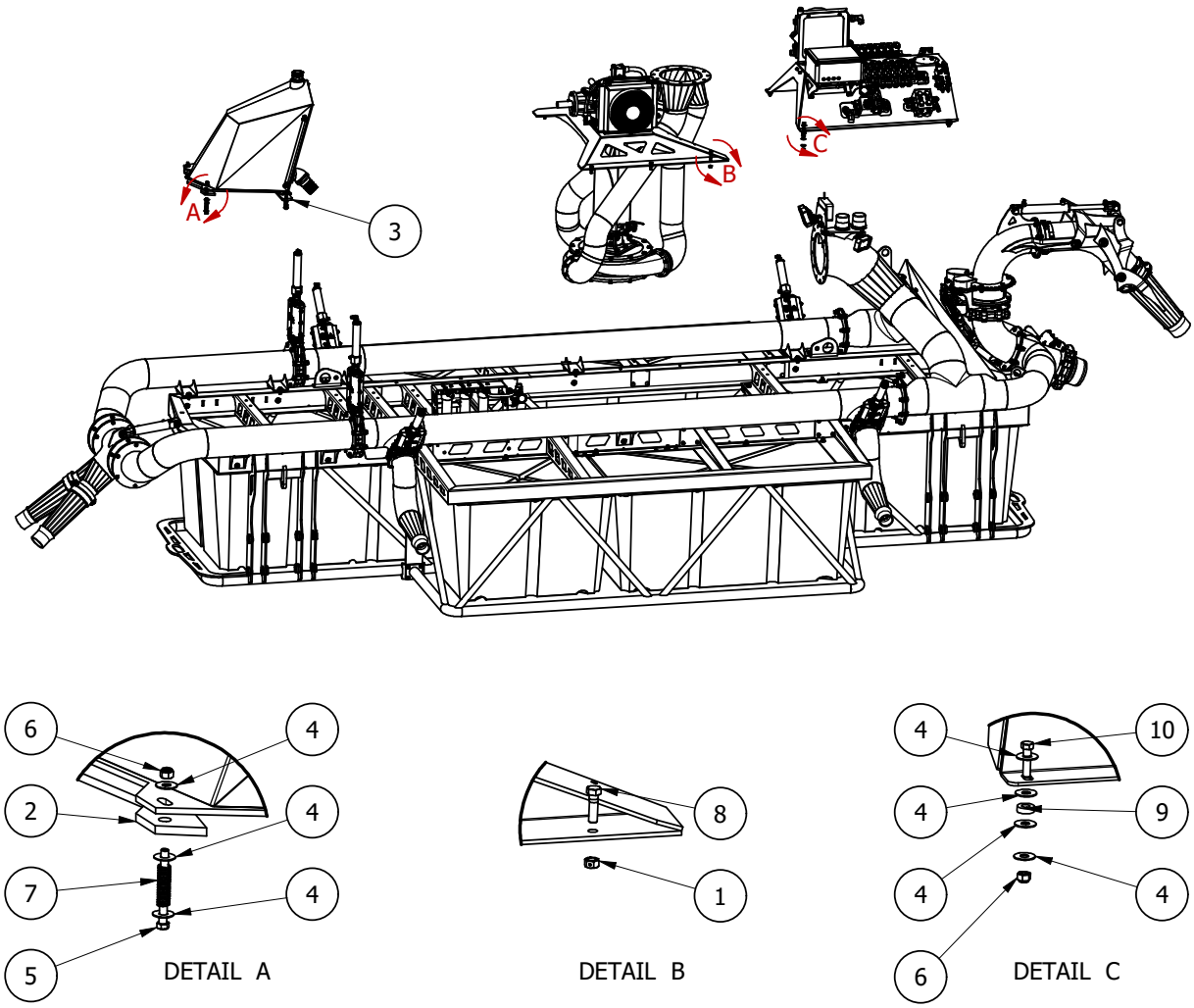

PARTS LIST

ITEM	QTY	PART NUMBER	TITLE
1	6	105-543	Nut - Reverse Nut - 0.5"
2	1	106-642	Crawler - Oil Tank Belting Material - 24.97" x 5" x 0.5"
3	1	106-641	Crawler - Oil Tank Belting Material - 40.5" x 3" x 0.5"
4	28	100-897	Washer - Flat - 0.4375"
5	4	101-192	Bolt - Hex Head - 0.4375" x 4.5" - GR5
6	8	100-903	Nut - Nylock - 0.4375"
7	4	104-214	Compression Spring - #40 - 0.75" OD x 3.5"
8	6	100-915	Bolt - Hex Head - 0.5" x 1.75" - GR5
9	4	104-108	0.5" Rubber Washer 1" OD x 0.32"
10	4	100-911	Bolt - Hex Head - 0.4375" x 1.75" - GR5

NUHN15000007323

Exhibit 2041
Bazooka v. Nuhn - IPR2023-01161
Page 13 of 51

Module Fasteners

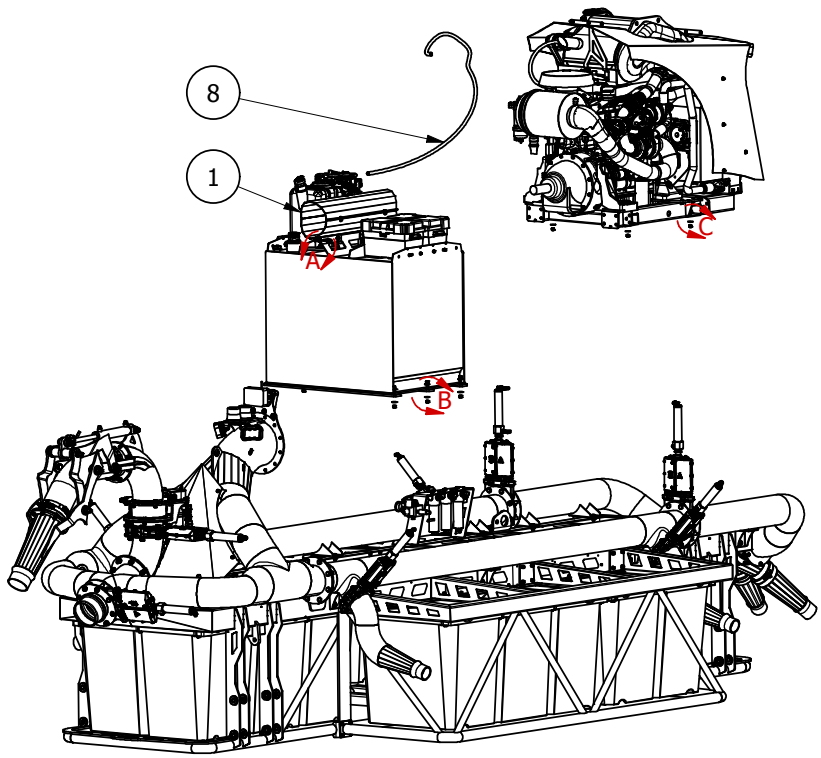

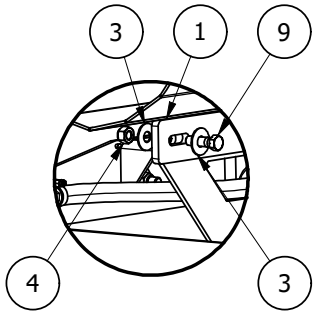

DETAIL A

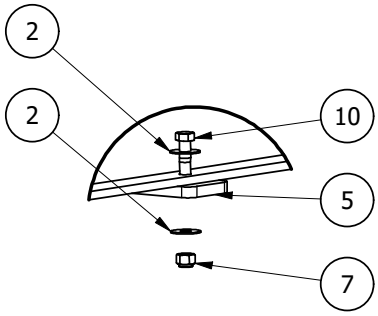

DETAIL B

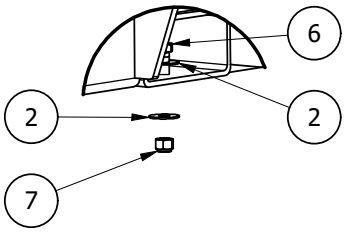

DETAIL C

PARTS LIST

ITEM	QTY	PART NUMBER	TITLE
1	1	100-788	Crawler - PTO Shield
2	20	100-898	Washer - Flat - 0.5"
3	8	100-897	Washer - Flat - 0.4375"
4	4	100-903	Nut - Nylock - 0.4375"
5	3	106-640	Crawler - Fuel Tank Belting Material - 48.5" x 3" x 0.5"
6	4	100-914	Bolt - Hex Head - 0.5" x 1.5" - GR5
7	10	100-904	Nut - Nylock - 0.5"
8	1	106-911	CAT Engine - DEF Line
9	4	100-910	Bolt - Hex Head - 0.4375" x 1.5" - GR5
10	12	104-319	Bolt - Hex Head - 0.5" x 2.25" - GR5

NUHN15000007324

Exhibit 2041
Bazooka v. Nuhn - IPR2023-01161
Page 14 of 51

A-Arm Mounted to Frame

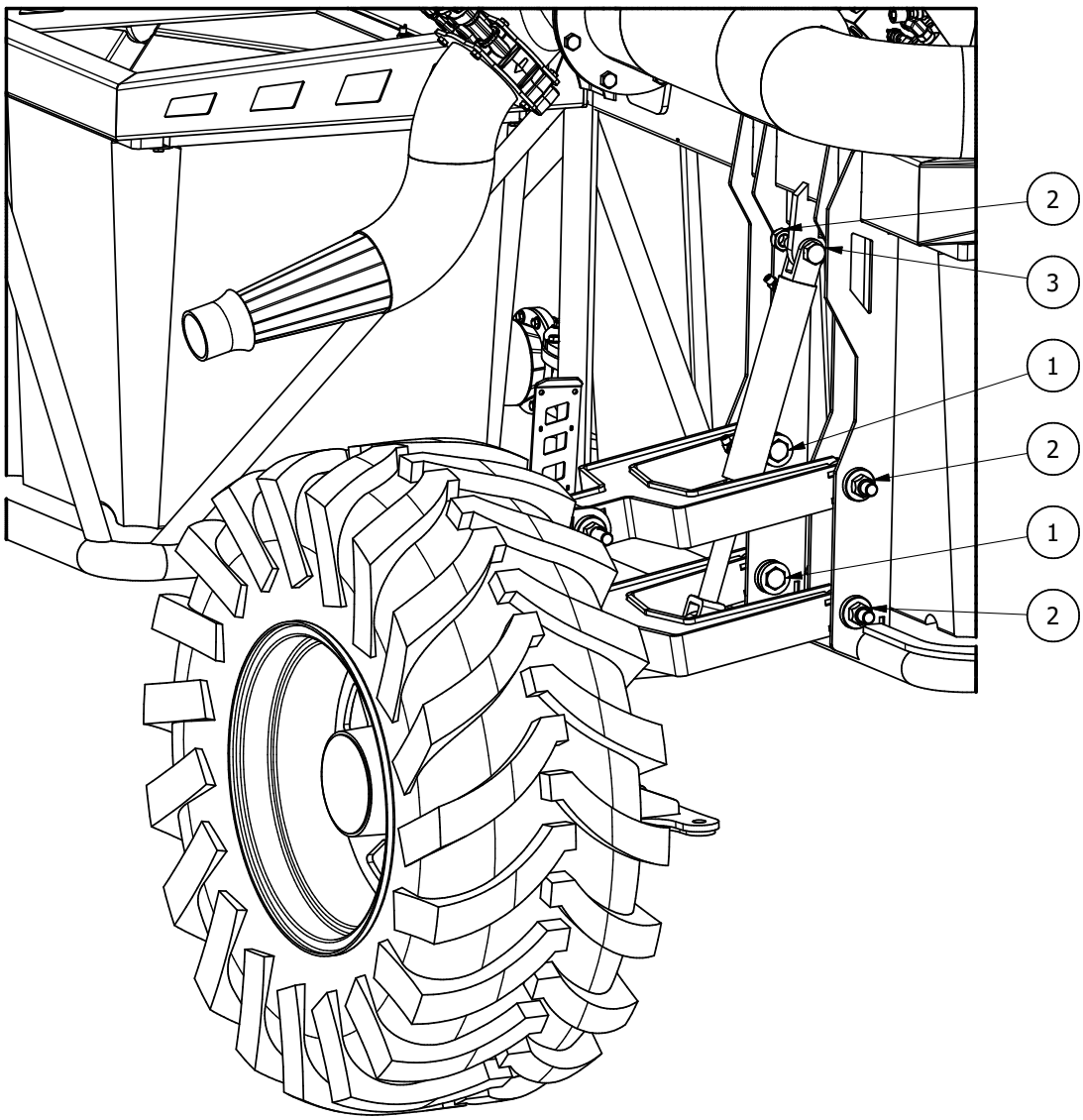

PARTS LIST

ITEM	QTY	PART NUMBER	TITLE
1	4	104-008	Bolt - Hex Head - 1 " x 7.5" - GR8
2	6	100-907	Nut - Nylock - 1"
3	2	100-467	Bolt - Hex Head - 1" x 4" - GR5

NUHN15000007325

Exhibit 2041
Bazooka v. Nuhn - IPR2023-01161
Page 15 of 51

A-Arm Assembly

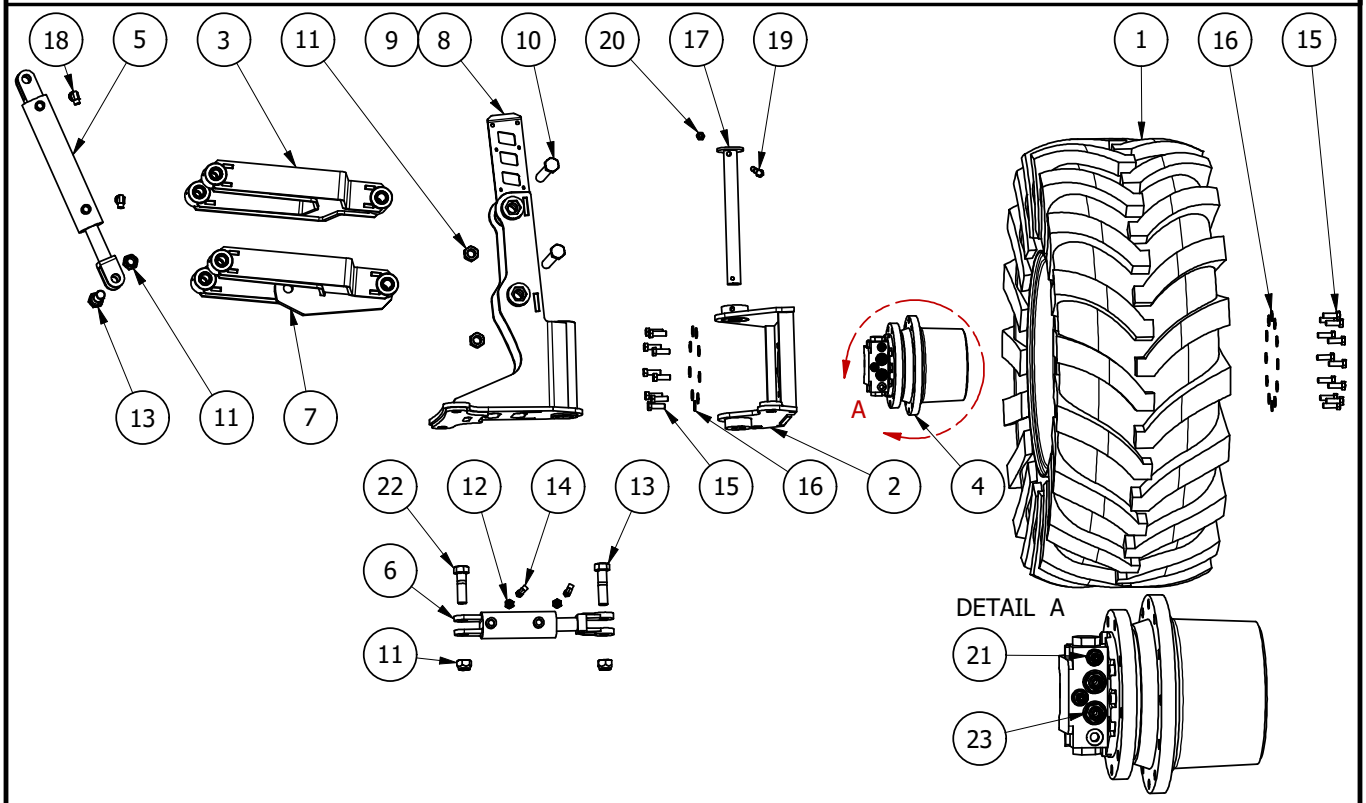

PARTS LIST

ITEM	QTY	PART NUMBER	TITLE
1	1	100-779	Tire Assembly - 500/70 R24
2	1	100-715	Crawler - Wheel Drive Mounting Bracket
3	1	100-777-2	2018 Lagoon Crawler A-Arm
4	1	103-929	Crawler - Wheel Drive
5	1	105-170	2.5" x 12" Welded Cylinder - Parallel Ports
6	1	100-895	Hyd. Cylinder - Welded - 2.5" x 4"
7	1	100-778-2	2018 Lagoon Crawler A-Arm with Cylinder Lug
8	1	106-553	Crawler - Wheel Drive Upright Bracket - Rear
9	1	100-714-1	Crawler - Wheel Drive Upright Bracket - Front
10	2	104-161	Bolt - Hex Head - 1" x 10" - GR8
11	5	100-907	Nut - Nylock - 1"
12	2	104-455	Hyd. Adapter - Straight - #4 MORS x #8 MOR
13	2	100-467	Bolt - Hex Head - 1" x 4" - GR5
14	2	104-794	Hyd. Adaptor - 90° Elbow - #4 MORS x #4 FORSX
15	21	100-925	Bolt - Hex Head - M14 x 40 - 8.8
16	21	104-005	Washer - Flat - 0.5625" - GR8
17	1	100-884	Crawler - A-Arm Pin Assembly
18	2	104-804	Hyd. Adaptor - 90° Elbow - #6 MORS x #8 MOR
19	1	104-321	Bolt - Hex Head - 0.5" x 3.75" - GR5
20	1	100-904	Nut - Nylock - 0.5"
21	2	104-800	Hyd. Adaptor - Straight - #4 MBSPP x #4 MORS
22	1	100-920	Bolt - Hex Head - 1" x 3.5" - GR5
23	2	104-926	Hyd. Adaptor - Straight - #8 MBSPP x #8 MORS

NUHN15000007326

Exhibit 2041
Bazooka v. Nuhn - IPR2023-01161
Page 16 of 51

Control and Charge Box Mounted to Side-Float

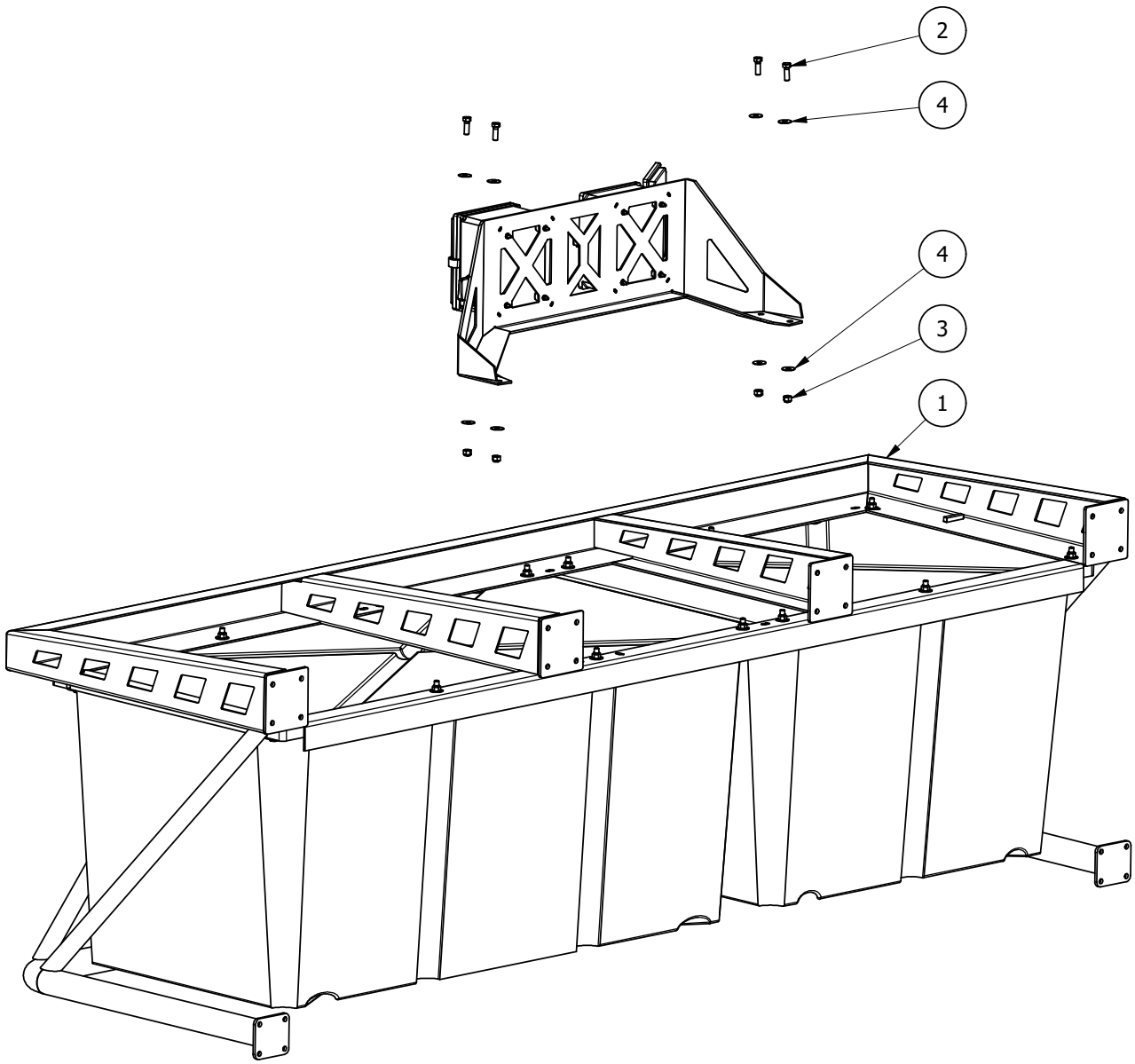

PARTS LIST

ITEM	QTY	PART NUMBER	TITLE
1	1	106-829	Side-Float Sub-Assembly - Left
2	4	100-914	Bolt - Hex Head - 0.5" x 1.5" - GR5
3	4	100-904	Nut - Nylock - 0.5"
4	8	100-898	Washer - Flat - 0.5"

Control Box And Charge Box Mounted Assembly

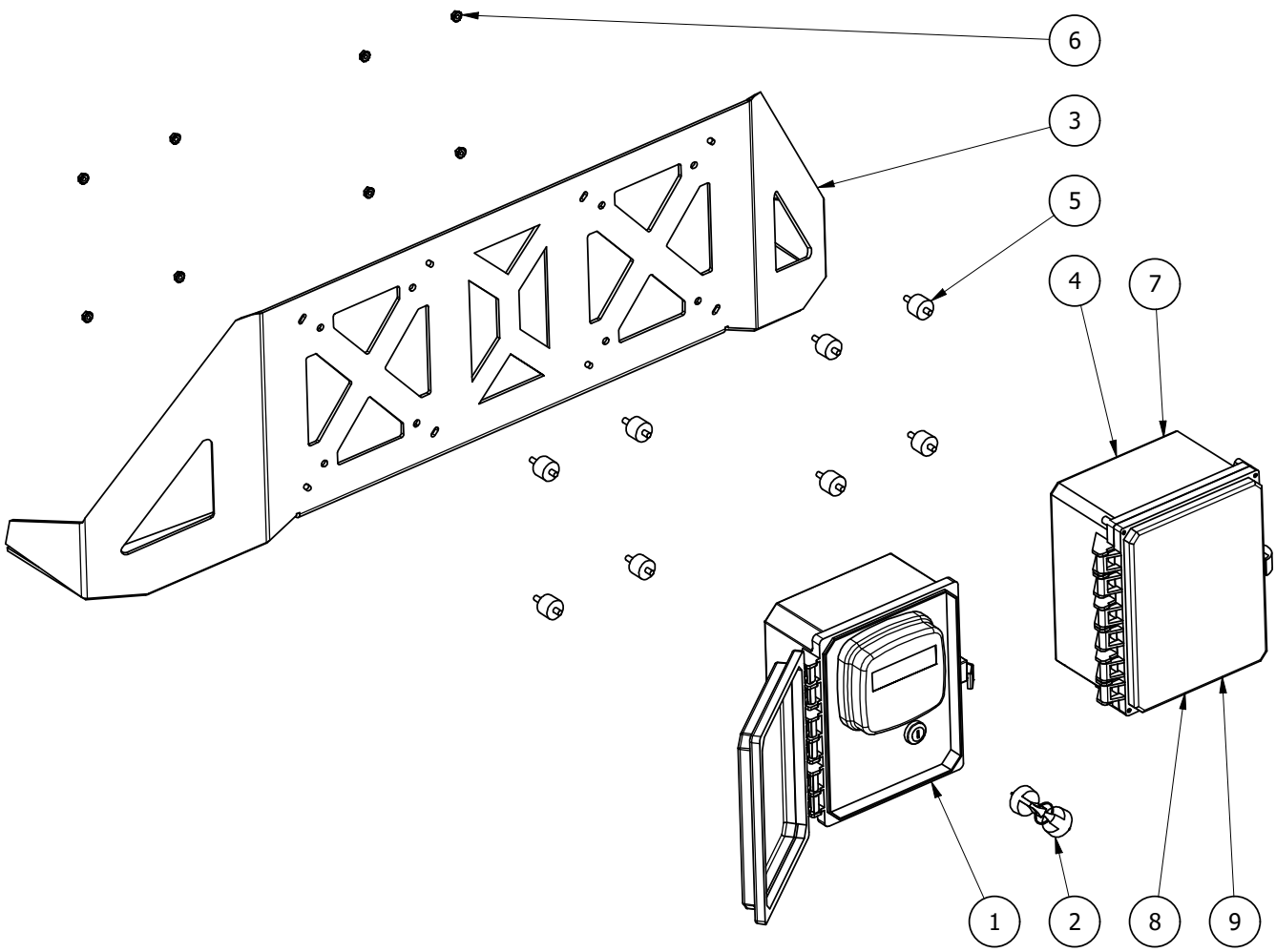

PARTS LIST

ITEM	QTY	PART NUMBER	TITLE
1	1	106-674	Engine - Control Panel - T4 - CE - 83013
2	1	104-553	Crawler - Key Spare - Includes 2
3	1	106-537	Control Panel and Charge Box Bracket
4	1	104-922-1	Crawler - Remote Charging Box For Bellypack
5	8	104-906	Rubber Isolator 0.25" Male x Male - Set of 4
6	8	104-652	Nut - 0.25" - GR KEPS with External Tooth Lock Washer
7	1	105-661	Radio - Remote Only - Bellypack TKCOMPACT2J13T(NUHN)
8	1	105-412	Radio - Charger Only - Bellypack
9	1	106-625	Crawler - Bellypack Remote - Key Only

Oil Tank Assembly

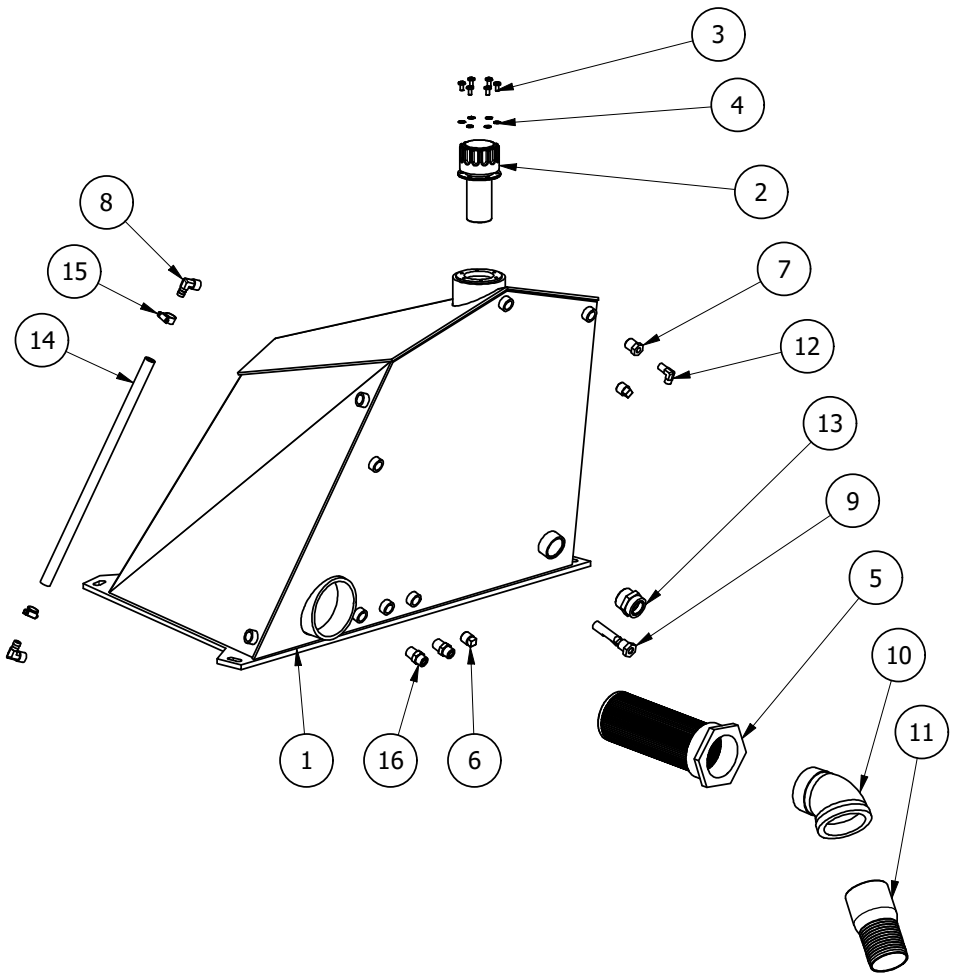

PARTS LIST

ITEM	QTY	PART NUMBER	TITLE
1	1	106-544	2018 Lagoon Crawler - Oil Tank
2	1	103-977	Crawler - Fuel Cap - Filler Breather
3	6	104-320	Screw - Slotted Square - 0.25" x 0.5"
4	6	104-006	Washer - Lock Tooth - 0.25"
5	1	106-281	Crawler - Suction Strainer - 4" MP x 3" FP
6	2	101-805	Hyd. Fitting - Plug #8 Square MP
7	1	104-241	Hyd. Adaptor - Straight - #8 MP x #4 FP
8	2	104-470	Hyd. Adaptor - 90° Elbow - #8 Barb x #8 MP - Brass
9	1	103-976	Crawler - Fuel/Oil Level Switch
10	1	106-476	Pipe Fitting - 45° Street Elbow - 3" Male to Female
11	1	106-483	3" NPT Male to 3" Hose Barb
12	1	104-690	Hyd. Adaptor - 90° Elbow - #4 MOR x #4 MORS
13	1	106-761	Hyd. Adaptor - Straight - #20 MP x #20 MORS
14	1	102-752	Hose - Water - 0.5 PVC - Steel Wire Reinforcement - 20"
15	2	104-370	Hose Clamp - 0.4375" Gear Clamp #8 SS
16	2	104-831	Hyd. Adaptor - Straight - #8 MORS x # 8 MP

2018 Lagoon Crawler Engine Assembly

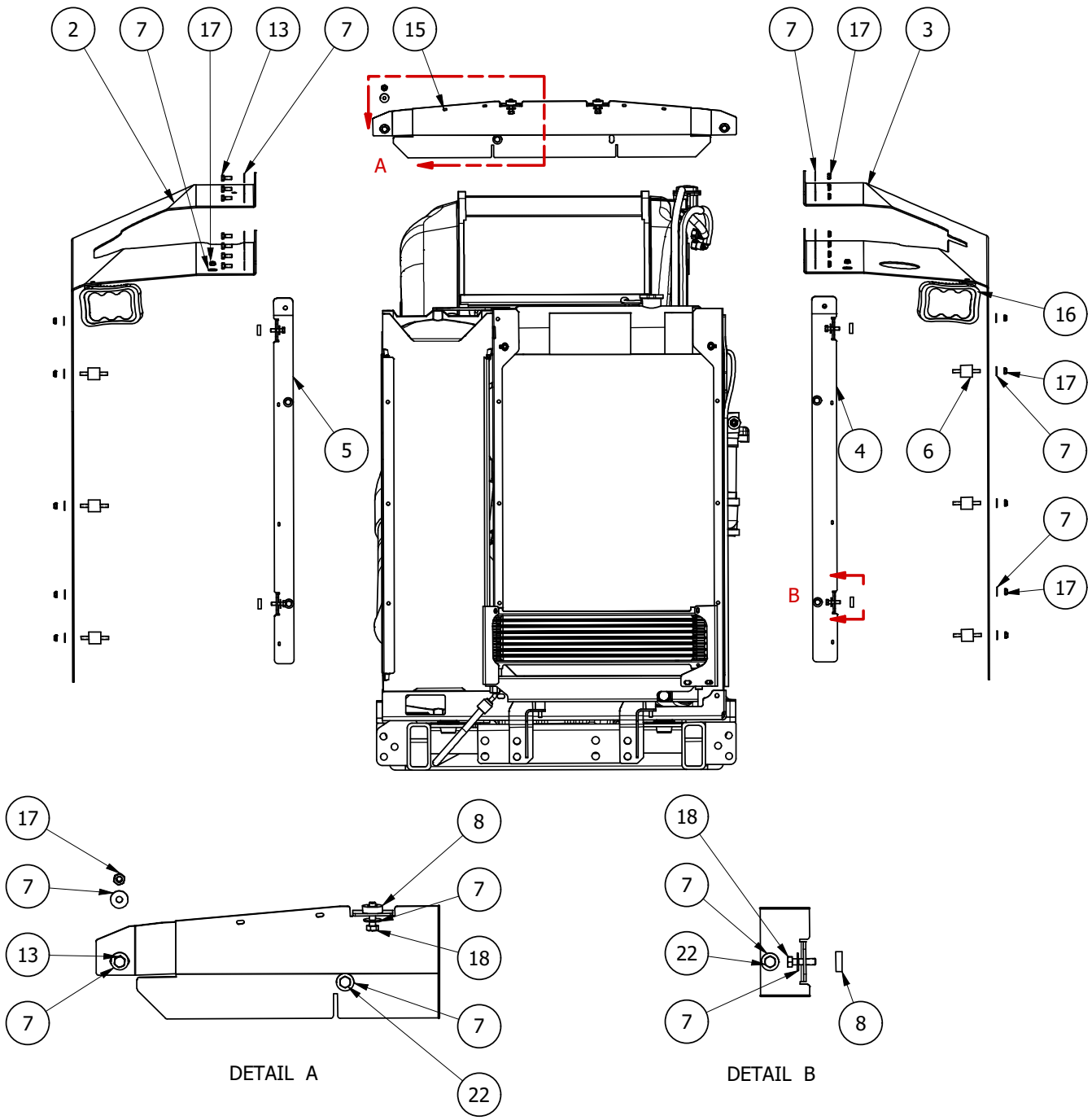

2018 Lagoon Crawler Engine Assembly

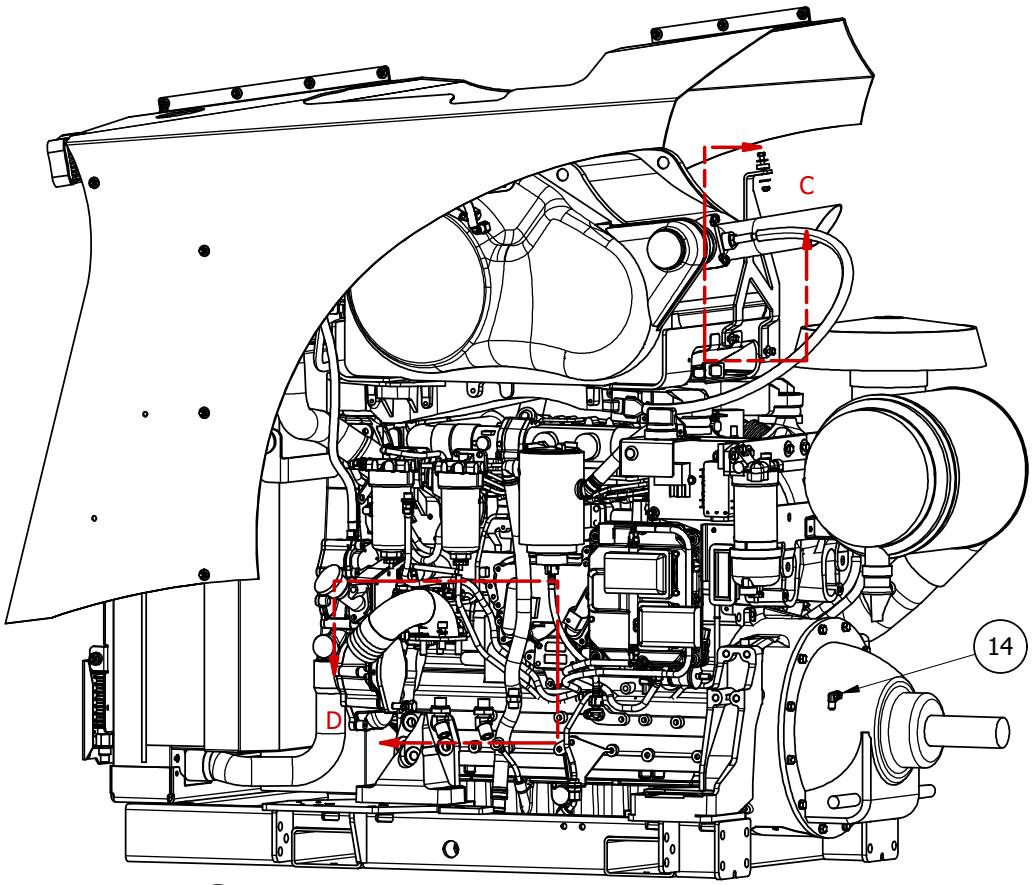

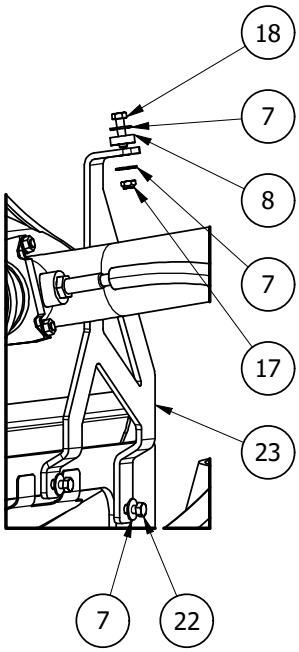

DETAIL C

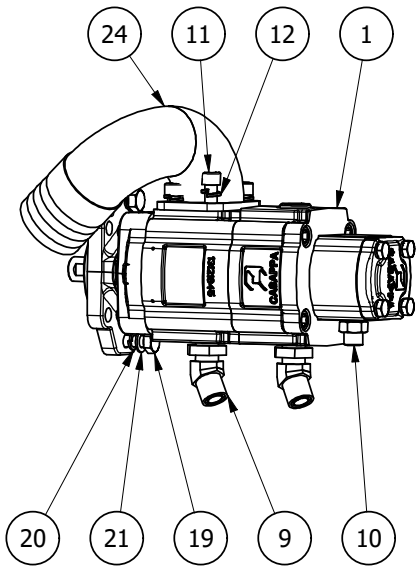

DETAIL D

NUHN15000007331

Exhibit 2041
Bazooka v. Nuhn - IPR2023-01161
Page 21 of 51

2018 Lagoon Crawler Engine Assembly

PARTS LIST

ITEM	QTY	PART NUMBER	TITLE
1	1	105-656-1	Triple Casappa Pump
2	1	106-545	Engine Hood - 3 - Left
3	1	106-546	Engine Hood - 3 - Right
4	1	106-836	Engine Hood Stabilizer Tab Right - 2
5	1	106-835	Engine Hood Stabilizer Tab Left - 2
6	6	106-453	Rubber Hood Insulator - M8 x 1.25
7	45	101-020	Washer - Flat - 0.3125"
8	7	104-108	0.5" Rubber Washer 1" OD x 0.32"
9	2	104-449	Hyd. Adapter - 45° Elbow - #12 MORS x #12 MOR
10	1	104-809	Hyd. Adaptor - Straight - #10 MOR x #8 MORS
11	4	106-735	Bolt - Soc Head - 0.5" x 1.75" - 12.9 Black Oxide
12	4	100-900	Washer - Lock - 0.5"
13	9	104-103	Bolt - Hex Head - M8 x 20 - 8.8
14	1	105-676	Hyd. Adaptor - 90° Elbow - #6 MJ x #6 FJ
15	1	106-837	Rad Seal Top Plate
16	2	106-557	Work Light - Rectangular LED - 5400L
17	22	106-432	Nut - Nylock - M8
18	7	106-915	Bolt - Hex Head - M8 x 30 - 8.8
19	2	104-765	Bolt - Hex Head - M12 x 40 - 10.9
20	2	106-610	Washer - Lock - M12
21	2	106-611	Washer - Flat - M12
22	7	106-328	Bolt - Hex Head - M8 x 16
23	1	106-914	Crawler - Rear Hood Brace
24	1	106-825	3" Altered Hose Barb

Engine Assembly - Replacement Features

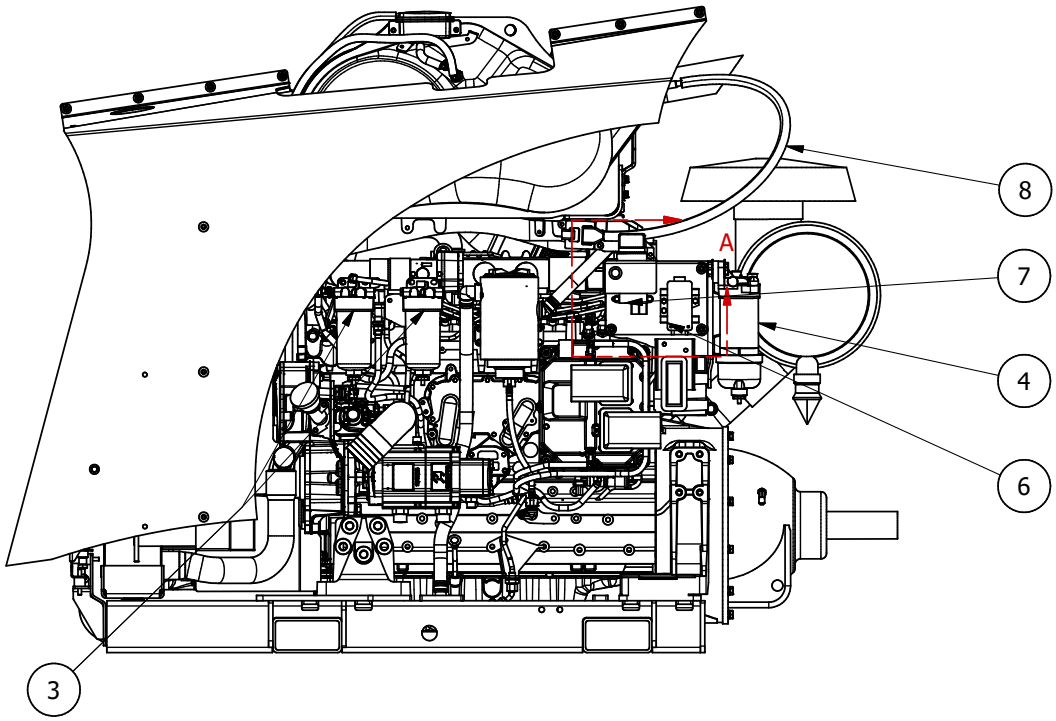

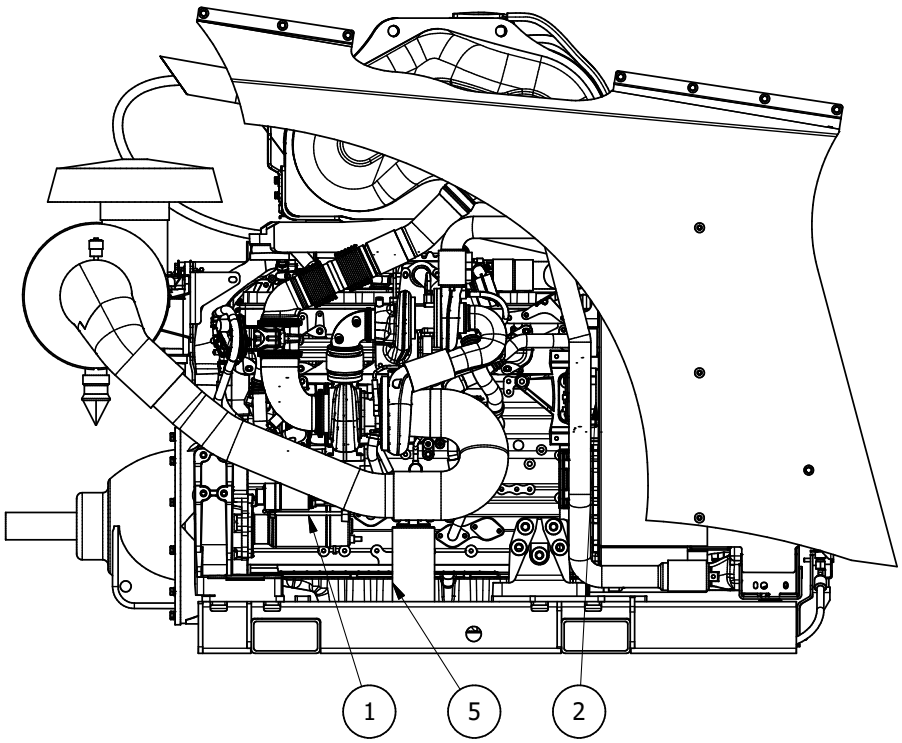

NUHN15000007333

Engine Assembly - Replacement Features

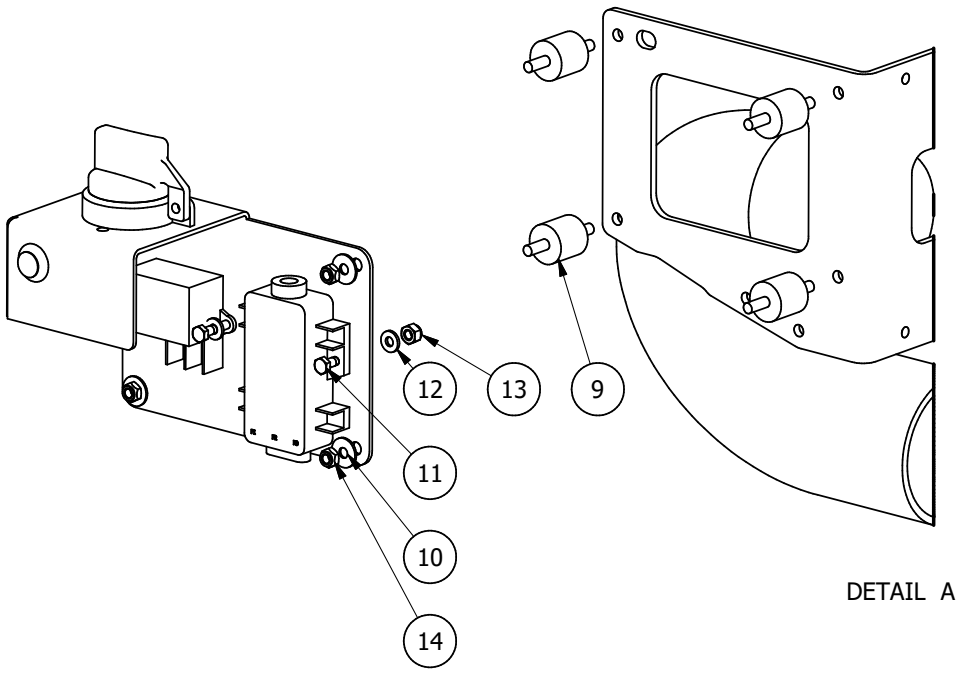

PARTS LIST

ITEM	QTY	PART NUMBER	TITLE
1	1	106-865	CAT Engine - T4 - Starter
2	1	106-866	CAT Engine - T4 - Alternator
3	2	106-633	CAT Engine - T4 - Fuel Filter
4	1	106-636	CAT Engine - T4 - Fuel Water Separator
5	1	106-631	CAT Engine - T4 - Oil Filter
6	1	106-867	CAT Engine - T4 - Fuse Box
7	1	106-868	CAT Engine - T4 - 12V Voltage Regulator
8	1	106-869	CAT Engine - T4 - Nox Sensor
9	4	106-453	Rubber Hood Insulator - M8 x 1.25
10	4	101-020	Washer - Flat - 0.3125"
11	5	103-125	Bolt - Hex Head - 0.25" x 1.25" GR5
12	7	101-019	Washer - Flat - 0.25"
13	5	102-521	Nut - Nylock - 0.25"
14	4	106-432	Nut - Nylock - M8

2018 Lagoon Crawler Fuel Tank

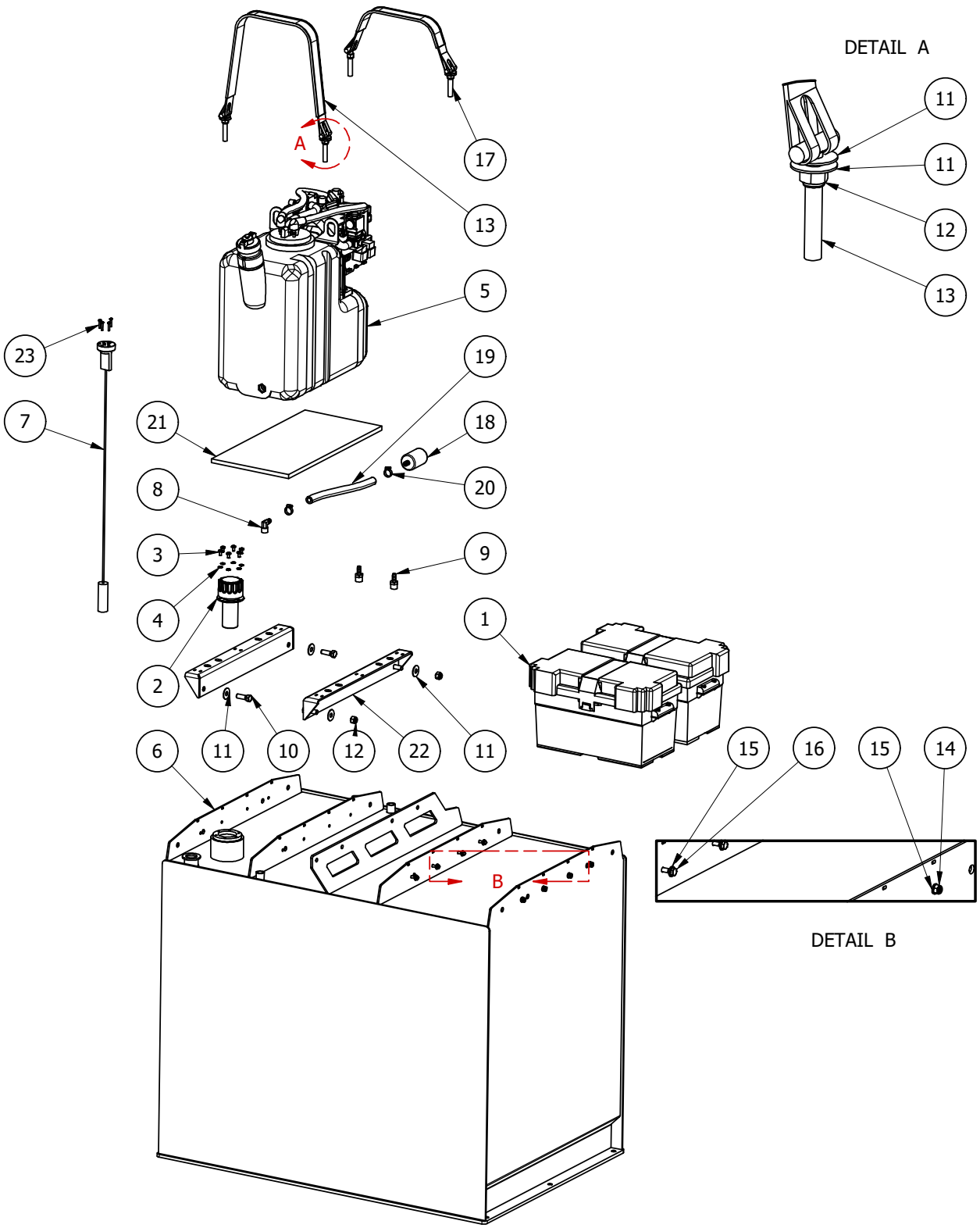

NUHN15000007335

Exhibit 2041
Bazooka v. Nuhn - IPR2023-01161
Page 25 of 51

2018 Lagoon Crawler Fuel Tank

PARTS LIST

ITEM	QTY	PART NUMBER	TITLE
1	2	104-522	Crawler - Battery Box Assembly
2	1	103-977	Crawler - Fuel Cap - Filler Breather
3	6	104-320	Screw - Slotted Square - 0.25" x 0.5"
4	6	104-006	Washer - Lock Tooth - 0.25"
5	1	106-912	CAT Engine - DEF Tank
6	1	106-530	2018 Lagoon Crawler Fuel Tank - Weldment
7	1	106-503	Fuel Level Sensor
8	1	104-470	Hyd. Adaptor - 90° Elbow - #8 Barb x #8 MP - Brass
9	2	101-815	Brass Fitting #6 Barb to #8 MP
10	4	100-914	Bolt - Hex Head - 0.5" x 1.5" - GR5
11	16	100-898	Washer - Flat - 0.5"
12	8	100-904	Nut - Nylock - 0.5"
13	1	106-809	DEF Tank Strap - Long
14	8	102-521	Nut - Nylock - 0.25"
15	16	101-019	Washer - Flat - 0.25"
16	8	101-058	Bolt - Hex Head - 0.25" x 1" GR5
17	1	106-810	DEF Tank Strap - Short
18	1	106-637	Fuel Inline Filter 0.5" Barb x 0.375" Barb
19	1	106-276x12	Fuel Line Before Filter
20	2	104-764	Clamp - Gear - #10
21	1	106-913	Rubber Mat for DEF Tank 22" x 11"
22	2	106-910	Mounting Bracket for T Bolt Strap for DEF Tank
23	4	106-567	Screw - Slotted Square - #10-24 x 1"

Crawler - Battery Box Assembly 104-522

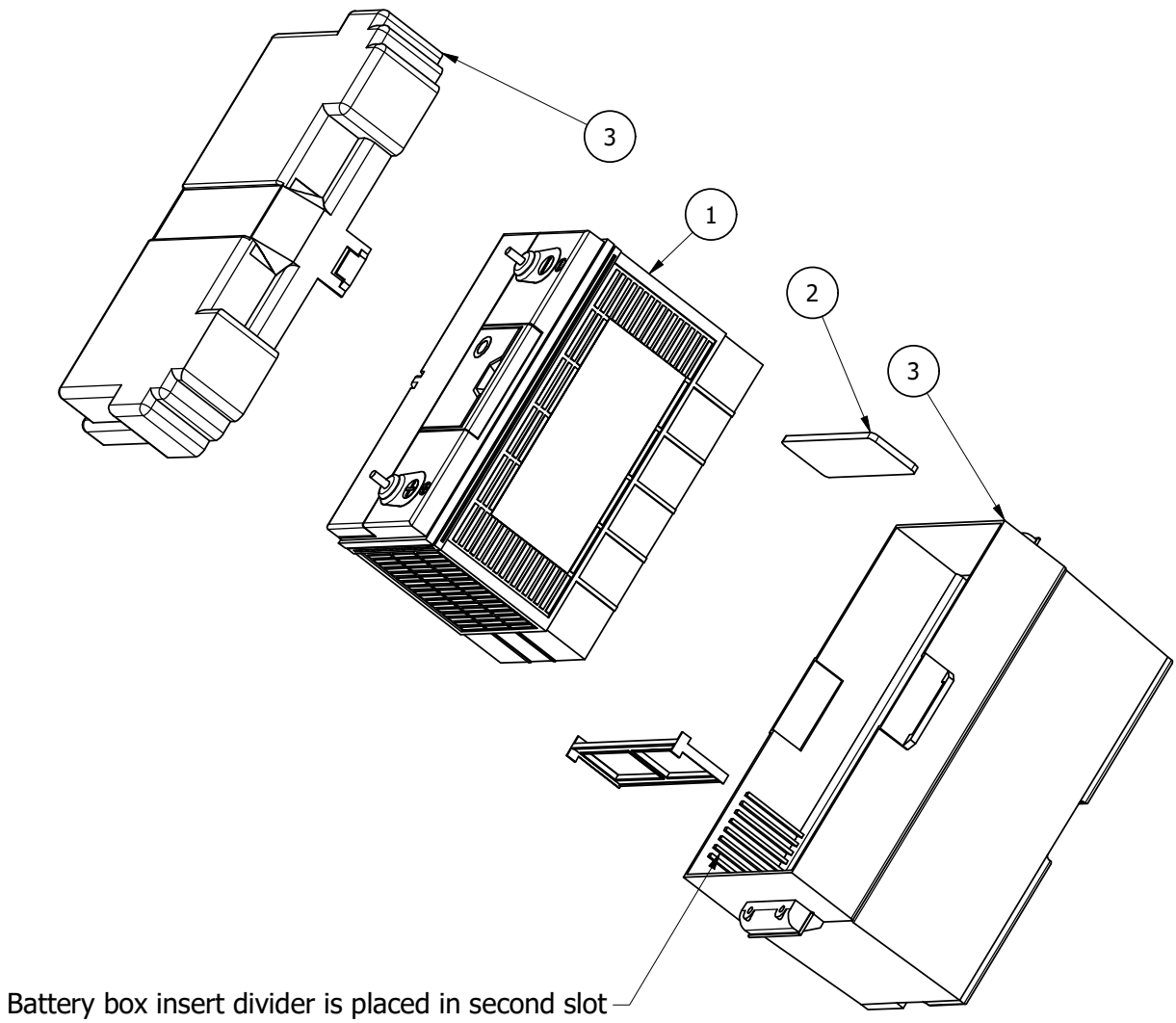

PARTS LIST

ITEM	QTY	PART NUMBER	TITLE
1	1	104-201	Crawler - Battery - Magnacharge
2	1	104-530	Crawler - Battery Box Gasket Spacer 7" x 2.25"
3	1	104-203	Battery Box - Adjustable

NUHN15000007337

Exhibit 2041
Bazooka v. Nuhn - IPR2023-01161
Page 27 of 51

Crawler - PTO Shield 100-788

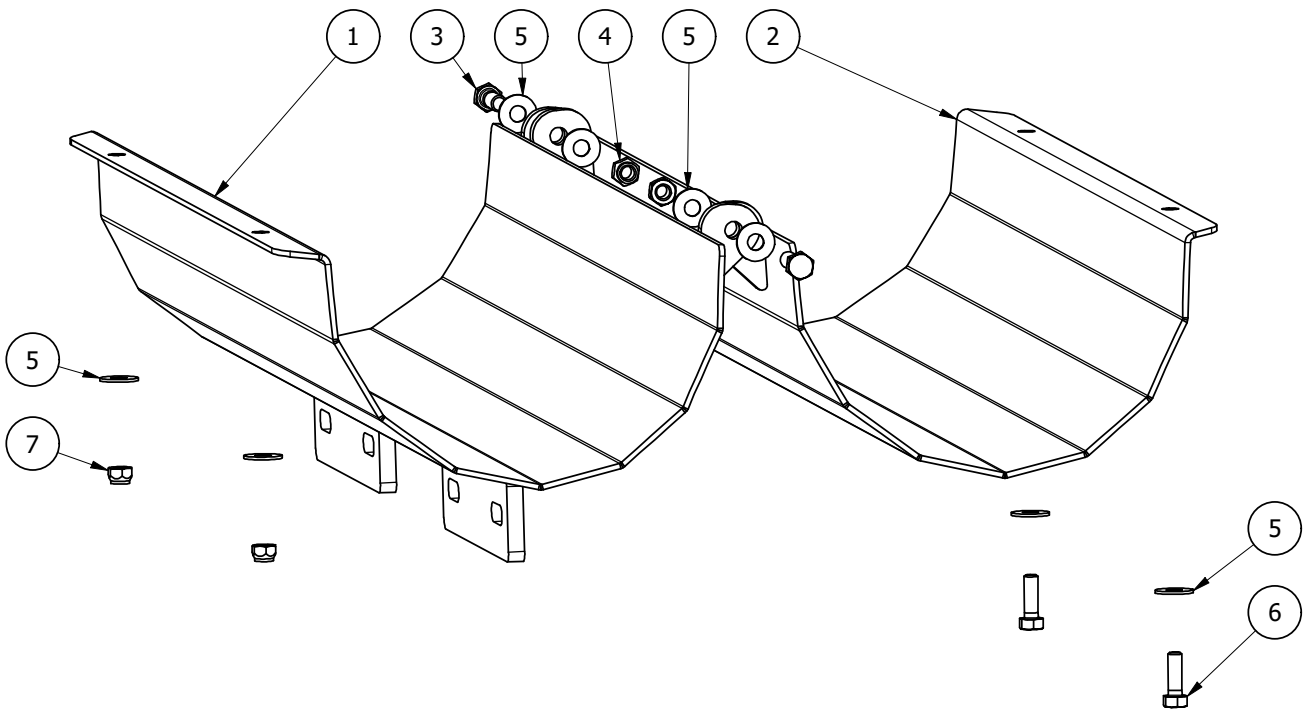

PARTS LIST

ITEM	QTY	PART NUMBER	TITLE
1	1	104-581	Crawler - PTO Shield - Bottom Cover
2	1	104-580	Crawler - PTO Shield - Top Cover
3	2	101-035	Bolt - Hex Head - 0.375" x 1.5" - GR5
4	2	100-902	Nut - Nylock - 0.375"
5	8	101-020	Washer - Flat - 0.3125"
6	2	101-026	Bolt - Hex Head - 0.3125" x 1" - GR5
7	2	101-189	Nut - Nylock - 0.3125"

Drive Line Assembly

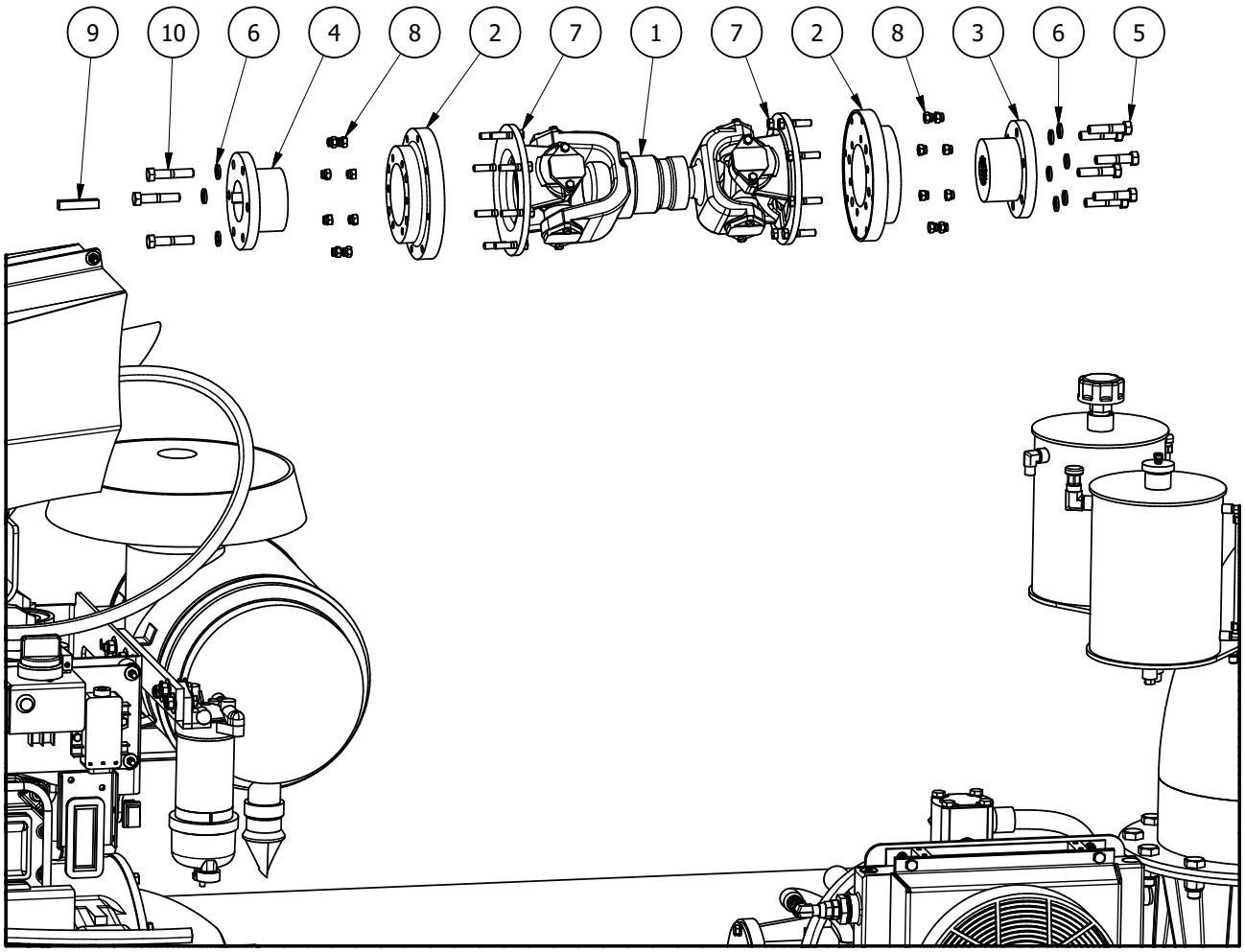

PARTS LIST

ITEM	QTY	PART NUMBER	TITLE
1	1	100-729	Crawler - Horizontal Drive Shaft Assembly - 1710 Series
2	2	104-682	Crawler - E Taper Lock Female to 1710
3	1	104-680	Crawler - Taper Lock Bushing - Spline (Gear Box)
4	1	104-681	Crawler - Taper Lock Bushing - Keyway (Engine)
5	6	104-319	Bolt - Hex Head - 0.5" x 2.25" - GR5
6	9	100-900	Washer - Lock - 0.5"
7	16	100-908	Bolt - Hex Head - 0.375" x 1.75" - GR5
8	16	100-902	Nut - Nylock - 0.375"
9	1	103-585 x 2.5"	Keyway - 0.625" X 0.625" X 2.5"
10	3	106-876	Bolt - Hex Head - 0.5" x 2.75" - GR8 - Black Oxide

Crawler - Horizontal Drive Shaft Assembly - 1710 Series

100-729

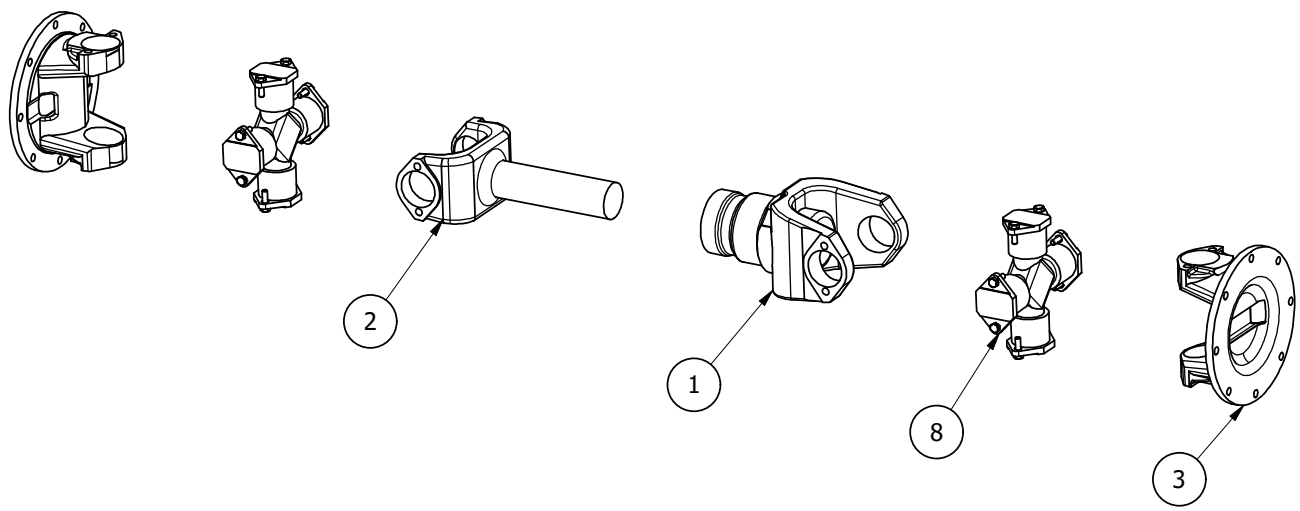

PARTS LIST

ITEM	QTY	PART NUMBER	TITLE
1	1	104-576	Crawler - 1710 Series Drive Shaft - Outer / Slip Yoke
2	1	104-577	Crawler - 1710 Series Drive Shaft - Inner / Yoke Shaft
3	2	104-578	Crawler - 1710 Series Drive Shaft - Flange Yoke
8	2	104-579	Crawler - 1710 Series Drive Shaft - Cross Kit

Crawler - Pump Module

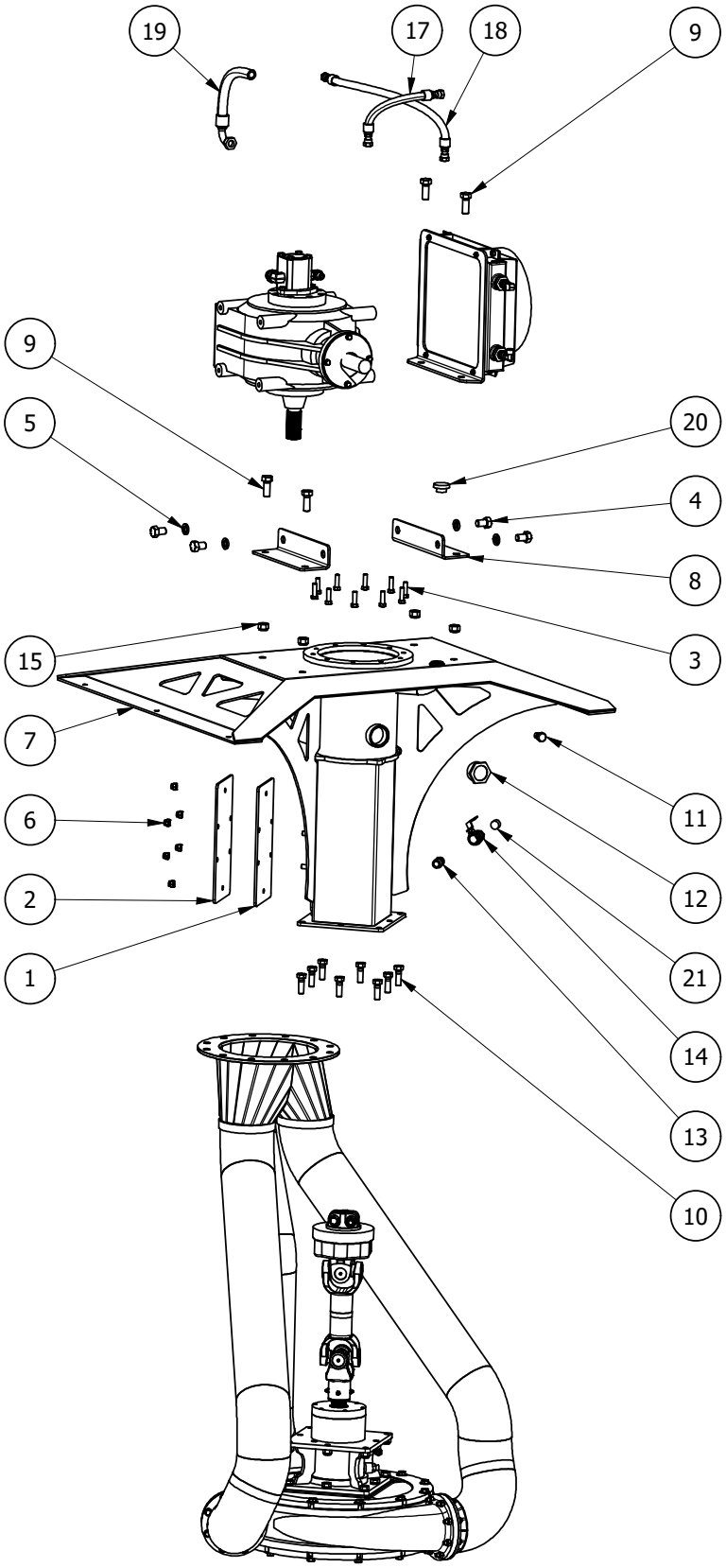

NUHN15000007341

Exhibit 2041
Bazooka v. Nuhn - IPR2023-01161
Page 31 of 51

Crawler - Pump Module

PARTS LIST

ITEM	QTY	PART NUMBER	TITLE
1	1	103-513	Gasket - Clean-Out Door - 15" x 7" x 0.25" - 6 Hole - No Cut Out
2	1	104-527	Clean-Out Door - 15" x 7" x 0.25" - 6 Hole
3	10	100-924	Bolt - Hex Head - M12 x 40 - 8.8
4	4	104-116	Bolt - Hex Head - M20 x 30 - 8.8
5	4	104-208	Washer - Lock - M20
6	6	100-904	Nut - Nylock - 0.5"
7	1	106-529	2018 Crawler Pump Frame - Rev 2
8	2	106-528	Gearbox Brace - Angle Iron
9	4	101-206	Bolt - Hex Head - 0.75" x 2" - GR5
10	6	101-059	Bolt - Hex Head - 0.625" x 2" - GR5
11	1	103-809	Plug - Hooded Breather - #6 NPT
12	1	101-449	Sight Glass - 2" Complete
13	1	101-536	Hyd. Adaptor Straight - #12 MP x #12 MP
14	1	102-166	Ball Valve - Brass - 0.75"
15	4	101-201	Nut - Nylock - 0.75"
17	1	106-778	Hydraulic Hose Assembly - 2018 Crawler - #99
18	1	106-777	Hydraulic Hose Assembly - 2018 Crawler - #98
19	1	106-779	Hydraulic Hose Assembly - 2018 Crawler - #2
20	1	103-489	Vacuum Pump - Flush Port Cap
21	1	106-924	Hyd. Fitting - Plug - #12 MP

Gearbox Cooler - VTD 150 - With Fittings

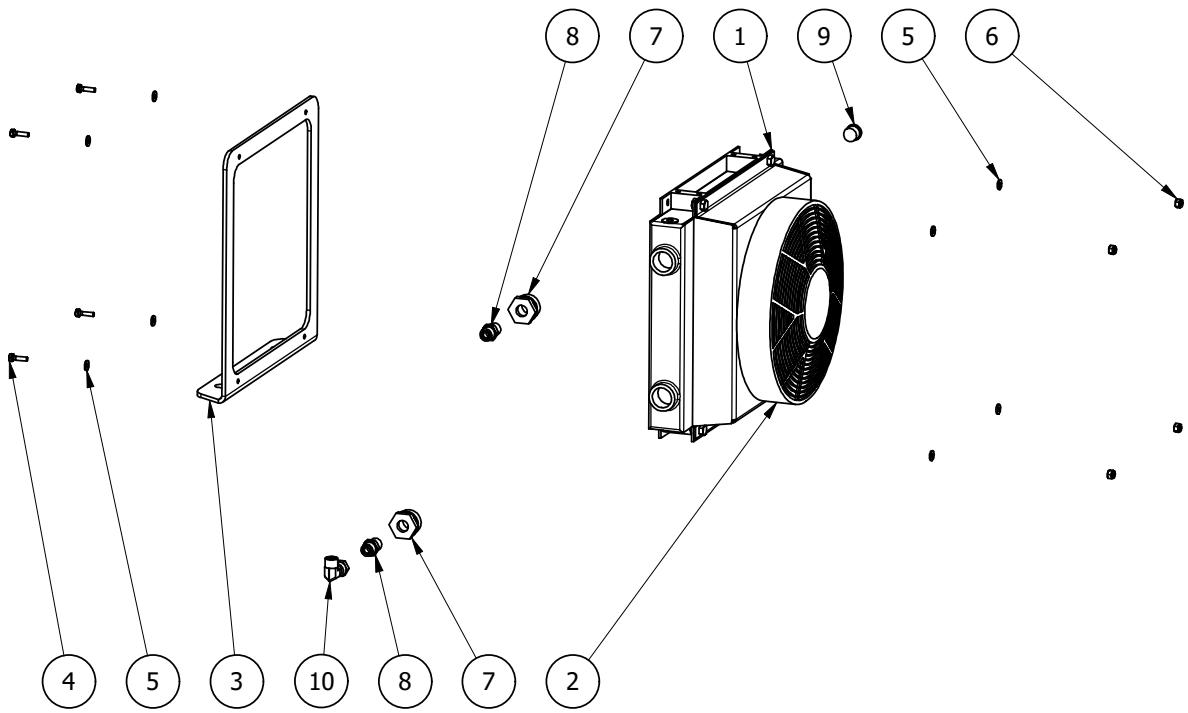

PARTS LIST

ITEM	QTY	PART NUMBER	TITLE
1	1	106-514	Crawler - Hydraulic - Gearbox Cooler Element - Complete with Fan
2	1	106-581	Gear Box Oil Cooler Replacement Fan
3	1	106-526	Gearbox Oil Cooler Mount
4	4	101-058	Bolt - Hex Head - 0.25" x 1" - GR5
5	8	101-019	Washer - Flat - 0.25"
6	4	102-521	Nut - Nylock - 0.25"
7	2	104-182	Hyd. Adapter - Straight - #16 MBSPP x #8 FP
8	2	104-831	Hyd. Adaptor - Straight - #8 MORS x # 8 MP
9	1	105-744	Metric Plug M22
10	1	104-825	Hyd. Adapter - 90° Elbow - #8 MORS x #8 FORSX

NUHN15000007343

Exhibit 2041
Bazooka v. Nuhn - IPR2023-01161
Page 33 of 51

Crawler - Gear Box Assembly

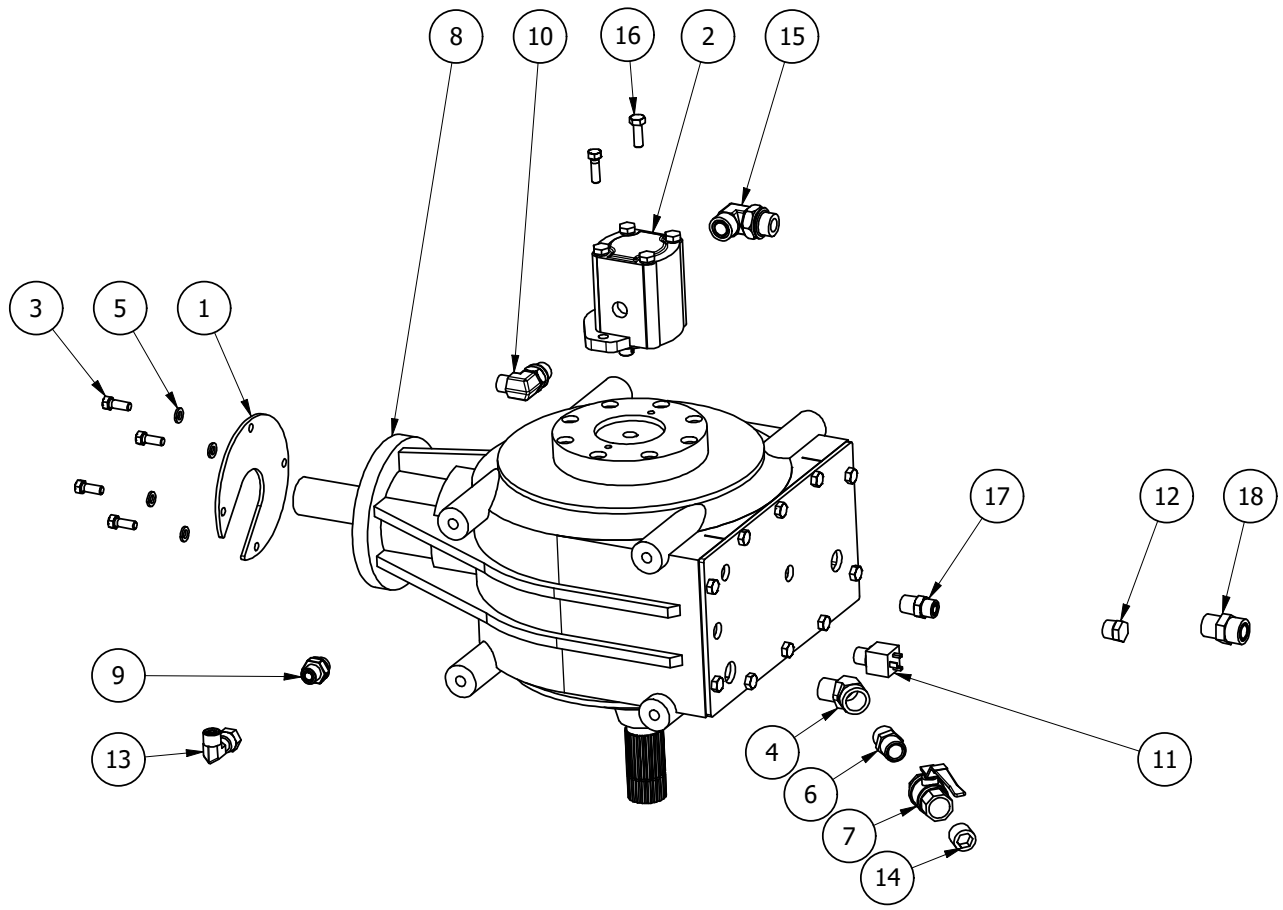

PARTS LIST

ITEM	QTY	PART NUMBER	TITLE
1	1	104-497	Gear Box Seal Guard
2	1	106-097	Crawler - Hydraulic - Pump PLP20.16D
3	4	101-021	Bolt - Hex Head - 0.375" x 1" - GR5
4	1	106-646	Hyd. Adaptor - 45° Elbow - #12 MP x #12 FP
5	4	101-185	Washer - Lock - 0.375"
6	1	101-536	Hyd. Adaptor Straight - #12 MP x #12 MP
7	1	102-166	Ball Valve - Brass - 0.75"
8	1	100-950-1	Crawler - Gear Box - T-332A
9	1	104-805	Hyd. Adapter - Straight - #8 MORS x #8 MOR
10	1	104-810	Hyd. Adaptor - 90° Elbow - #10 MOR x #8 MORS
11	1	106-092	Heat Sensor - 293F
12	1	101-805	Hex Head Plug - 0.5"
13	1	104-825	Hyd. Adapter - 90° Elbow - #8 MORS x #8 FORSX
14	1	106-924	Hyd. Fitting - Plug - #12 MP
15	1	104-814	Hyd. Adaptor - 90° Elbow - #12 MOR x #12 MORS
16	1	103-377	Bolt - Hex Head - M10 x 30 - 8.8
17	1	104-831	Hyd. Adaptor - Straight - #8 MORS x # 8 MP
18	1	104-707	Hyd. Adaptor - Straight - #12 MORS x #12 MP

NUHN15000007344

Exhibit 2041
Bazooka v. Nuhn - IPR2023-01161
Page 34 of 51

Crawler - Gear Box - T-332A 100-950-1

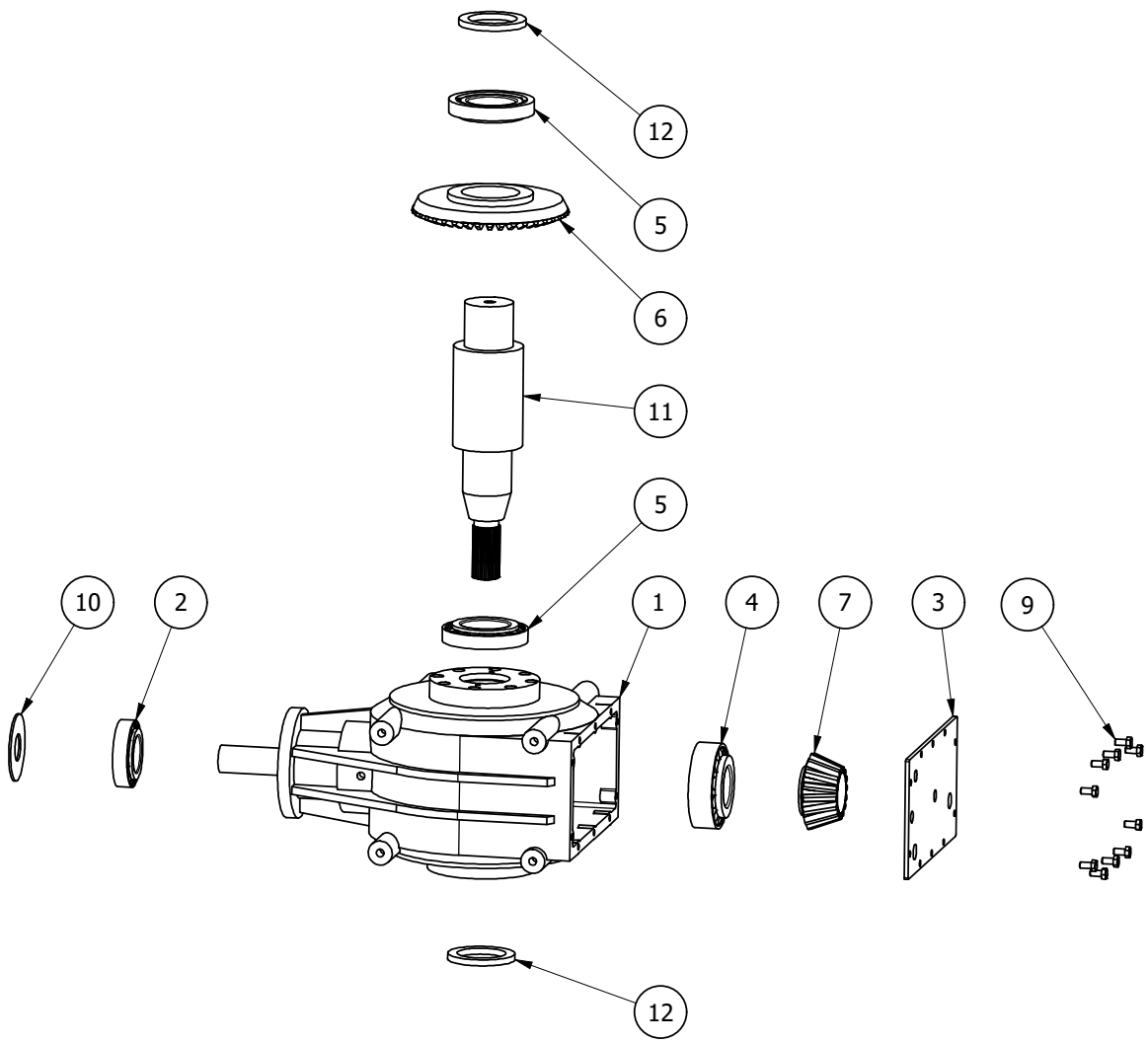

PARTS LIST

ITEM	QTY	PART NUMBER	TITLE
1	1	104-515	Crawler - Gear Box T-332A - Casing
2	1	104-511	Bearing - Tapered Roller - 32212
3	1	104-517-1	Crawler - Gear Box T-332A - Cover
4	1	104-510	Bearing - Tapered Roller - 32313
5	2	104-509	Bearing - Tapered Roller - 30216
6	1	104-514	Crawler - Gear Box T-332A - Crown Wheel 240 M7.75
7	1	104-512	Crawler - Gear Box T-332A - Pinion Shaft
9	10	104-516	Bolt - Hex Head - M10 x 20 - 8.8
10	1	104-260	Crawler - Gear Box #332 - Oil Seal, 50-110-12-TC
11	1	104-513-1	Crawler - Gear Box T-332A - Shaft 1"
12	2	104-754	Crawler - Gear Box T-332A - Double Lip Seal 80-110-10

NUHN15000007345

Exhibit 2041
Bazooka v. Nuhn - IPR2023-01161
Page 35 of 51

Lower Pump Module Assembly

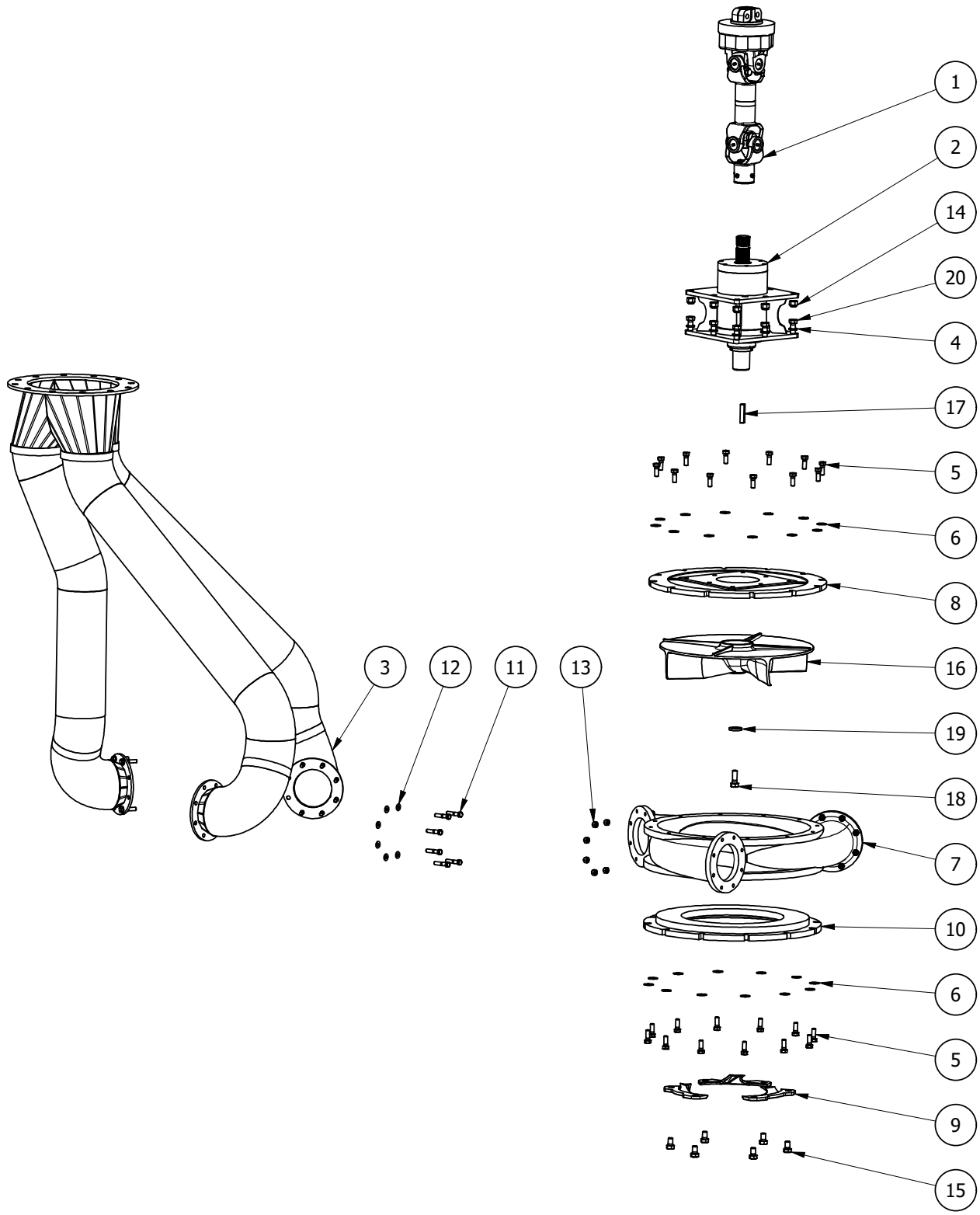

NUHN15000007346

Lower Pump Module Assembly

PARTS LIST

ITEM	QTY	PART NUMBER	TITLE
1	1	100-951	Crawler - Vertical Shaft with Integrated Clutch - Weasler 55
2	1	100-820-3	Mech-TC Seal and Bearing System - 2.25" Complete
3	1	106-525	12" Header - Rev 2
4	8	101-187	Washer - Lock - 0.625"
5	24	104-911	Bolt - Hex Head - 0.5" x 1.375" - GR5
6	24	100-897	Washer - Flat - 0.4375"
7	1	105-228	8" Triple Port Pump - Housing 20.5" Finished - 550 HB -1A
8	1	105-229	8" Triple Port Pump - Top Housing Cover 550 HB -1A
9	3	106-762	Crawler - Inlet Chopper - 14" - 2018 Model
10	1	105-230	Inlet Cover with Inner BC - 14"
11	18	102-439	Bolt - Hex Head - 0.4375" x 2" - GR5
12	18	101-020	Washer - Flat - 0.3125"
13	18	100-903	Nut - Nylock - 0.4375"
14	8	PRT-0660	Nut - Nylock - 0.625"
15	6	101-057	Bolt - Hex Head - 0.625" x 1" - GR5
16	1	106-763	20.5" Impeller - Cast - 4 Blade
17	1	103-585 x 2.5"	Keyway - 0.625" X 0.625" X 2.5"
18	1	103-713	Bolt - Hex Head - 0.625" x 1.75" - GR5
19	1	105-657	Weld on Hex Washer 0.625"
20	8	PRT-0148	Bolt - Hex Head - 0.625" x 1.5" - GR5

Mech-TC Seal and Bearing System - 2.25" Complete 100-820-3

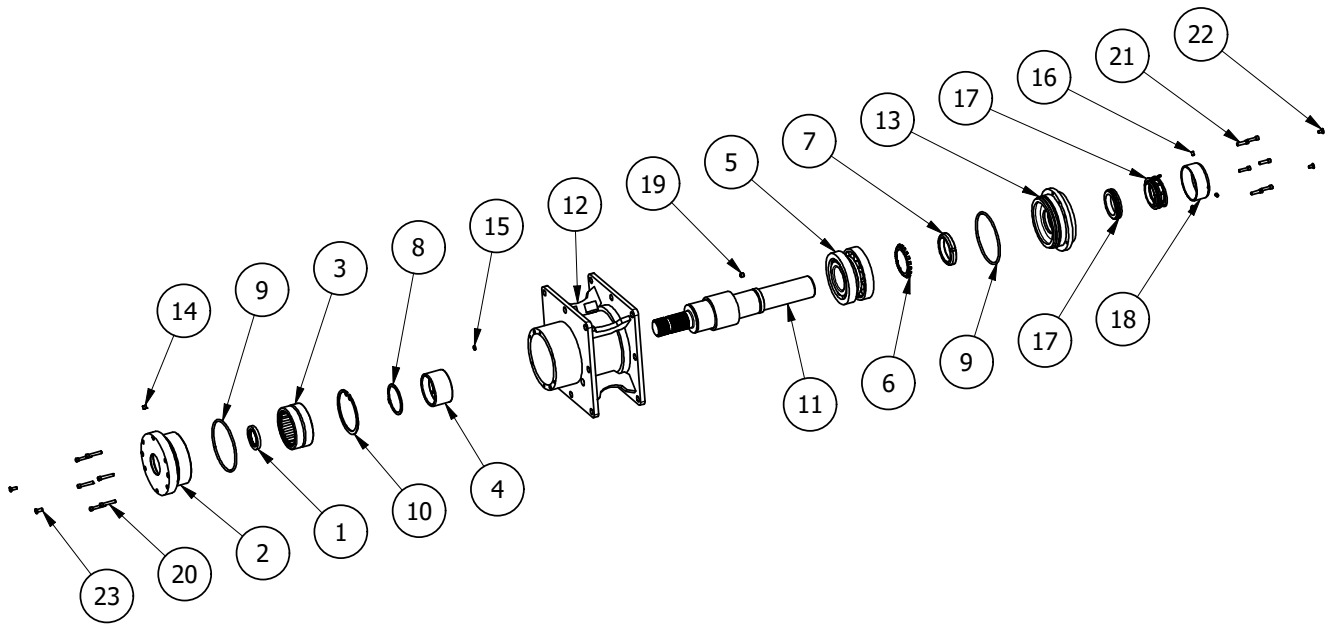

PARTS LIST

ITEM	QTY	PART NUMBER	TITLE
1	1	100-936	Lip Seal - 17381 - 1.75" x 2.502" x 0.313"
2	1	100-869-1	Mech-TC - Seal Retaining Cap - 2.25"
3	1	104-219	Roller Bearing - 3.5" x 4.5" x 2" - BR567232
4	1	104-220	Inner Ring - 3" x 3.5" x 2" - LRB485632
5	2	104-167	Bearing - Tapered Roller - 31313 - Matched Set - Face to Face
6	1	104-178	Bearing Lockwasher - TW113 (N-13)
7	1	104-177	Bearing Locknut - N-13 REM
8	1	104-179	Retaining Ring - External - 3"
9	2	104-268	O-Ring - #354 DAE Buna 5.5"OD x 5.25"ID
10	1	104-180	Retaining Ring - Internal - 4.5"
11	1	104-376	Mech-TC - Shaft - 2.25"
12	1	100-864	Mech-TC - Housing Only - 2.25"
13	1	100-870-1	Mech-TC - Seal End Cap - 2.25"
14	1	103-073	Hyd. Fitting - Plug Straight Square Head - 0.125"
15	1	104-348	O-Ring - #2-108
16	3	104-660	Screw - Set - 0.25" x 0.3125" Hex Drive - Black Oxide
17	1	104-175	Mech - TC - Seal Type 2 - 2.25"
18	1	105-798	Protective Sleeve and Set Screws
19	1	103-312	Screw - Set - 0.375" x 0.375" Hex Drive - Black Oxide
20	6	102-128	Bolt - Socket Head - 0.25" x 1.5" - GR8 Black Oxide
21	6	103-944	Bolt - Socket Head - 0.25" x 1" - GR8 Black Oxide
22	2	102-129	Bolt - Countersunk - 0.25" x 0.5"
23	2	102-623	Bolt - Countersunk - 0.25" x 0.75"

Hydraulic Manifold Mounts

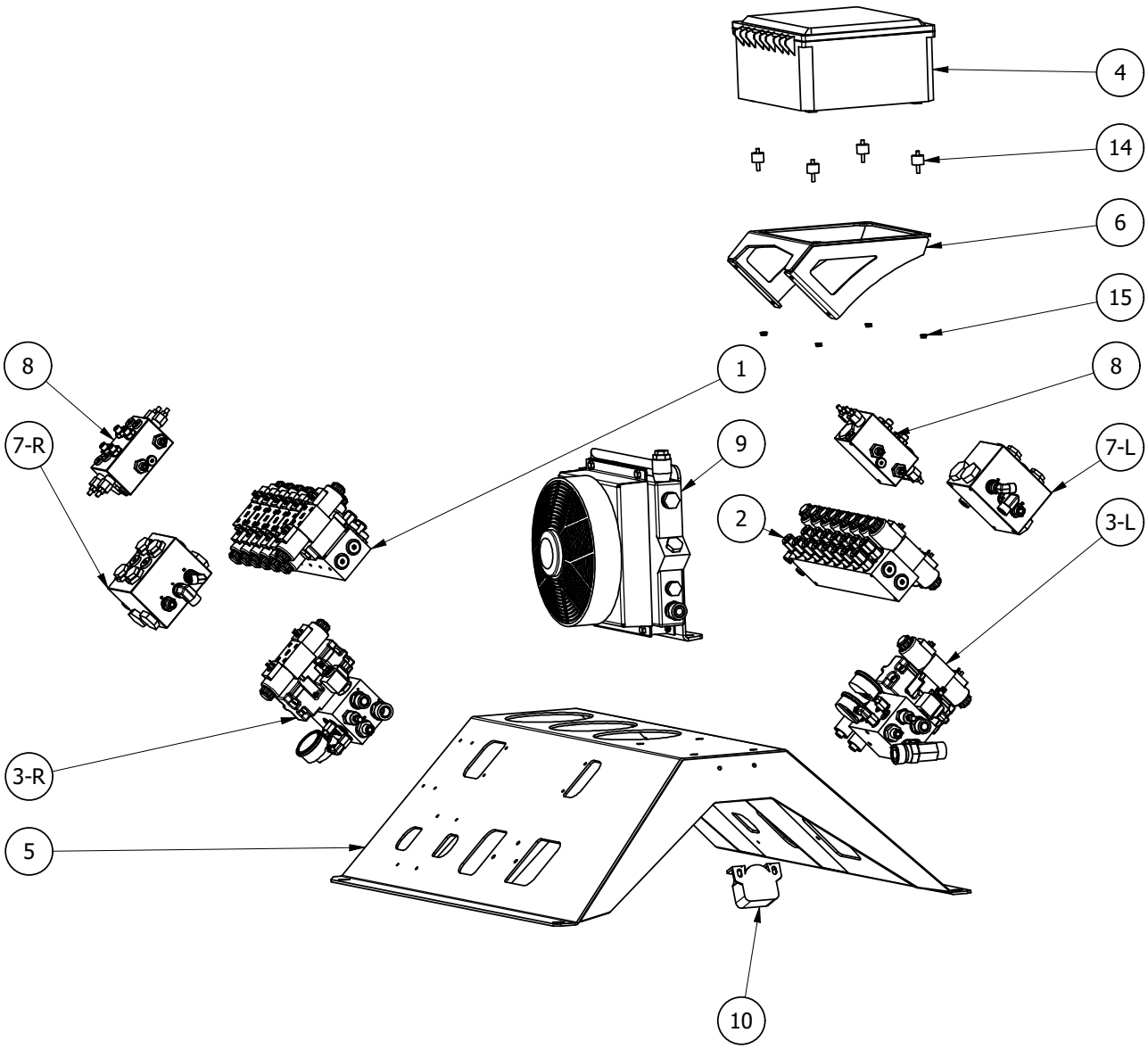

WHERE L AND R DENOTE LEFT OR RIGHT

Hydraulic Manifold Mounts

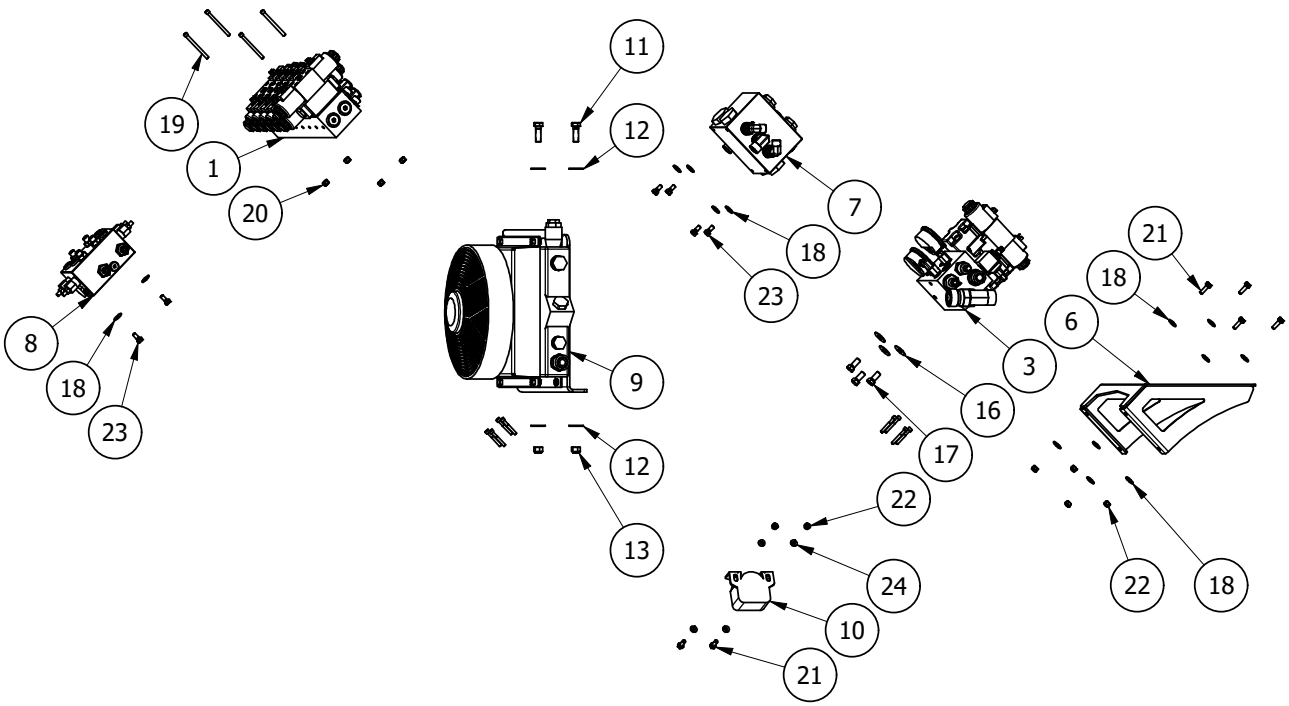

PARTS LIST

ITEM	QTY	PART NUMBER	TITLE
1	1	104-591	Crawler - Hydraulic Solenoid Right Assembly
2	1	104-632	Crawler - Hydraulic Solenoid Left Assembly
3	2	104-031-1	Dump Valve Block with Pressure Relief and Reducing Valve
4	1	106-540	Electrical Box
5	1	106-538	Dog House Weldment
6	1	106-539	Electrical Box Mount
7	2	104-234	Wheel Drive Manifold CX-77
8	2	104-233	Lift and Steer Block Manifold
9	1	106-513	Crawler - Hydraulic - Oil Cooler - With By Pass
10	1	105-892	TA Techspan Back-Up Alarm
11	2	100-914	Bolt - Hex Head - 0.5" x 1.5" - GR5
12	4	100-898	Washer - Flat - 0.5"
13	2	100-904	Nut - Nylock - 0.5"
14	4	104-906	Rubber Isolator 0.25" Male x Male - Set of 4
15	4	104-652	Nut - 0.25" - GR KEPS with External Tooth Lock Washer
16	6	100-897	Washer - Flat - 0.4375"
17	6	106-482	Bolt - Hex Head - 0.4375" x 1" - UNF - GR8
18	20	101-020	Washer - Flat - 0.3125"
19	8	103-004	Bolt - Soc Head - 0.25" x 3" - Black Oxide
20	8	102-521	Nut - Nylock - 0.25"
21	6	101-026	Bolt - Hex Head - 0.3125" x 1" - GR5
22	6	101-189	Nut - Nylock - 0.3125"
23	12	103-144	Bolt - Hex Head - 0.3125" x 0.75" - GR5
24	4	101-019	Washer - Flat - 0.25"

Crawler - Hydraulic Solenoid Right Assembly 104-591

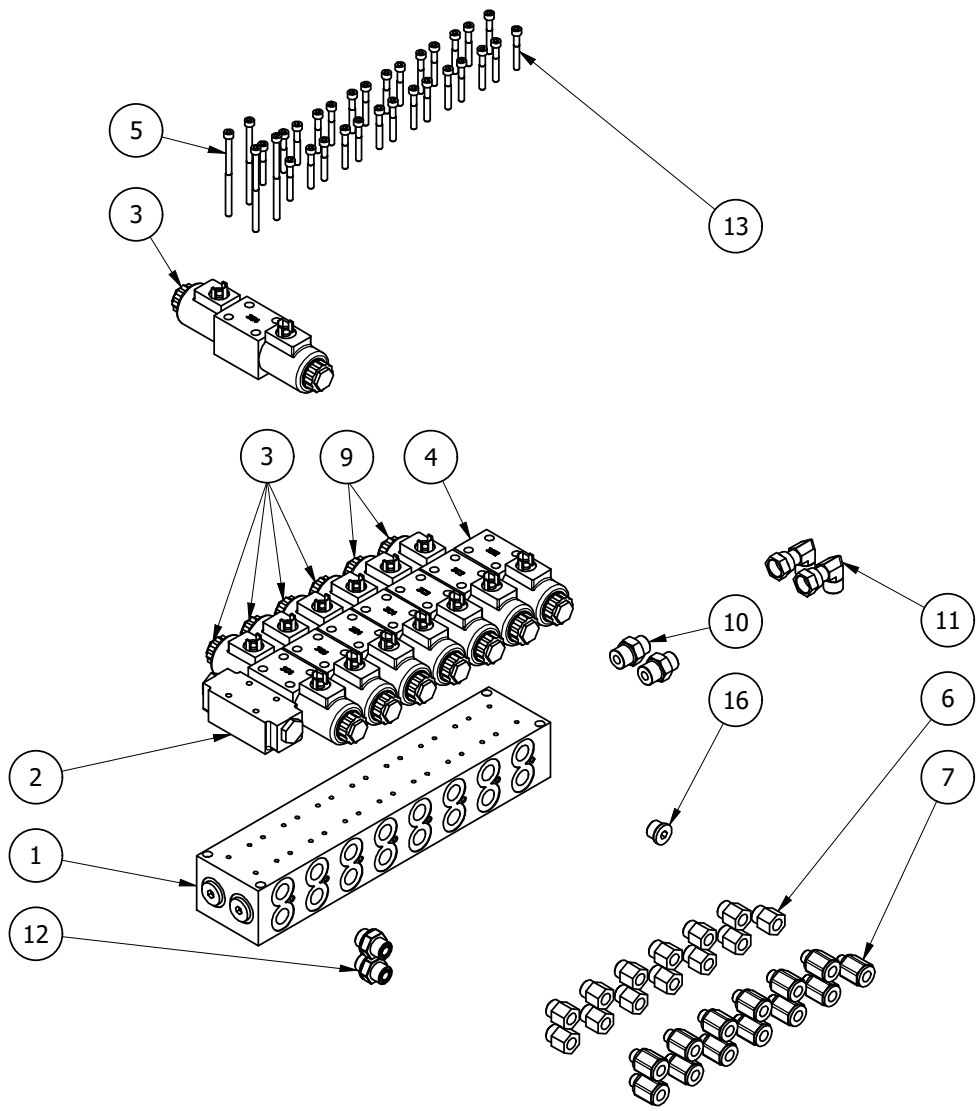

PARTS LIST

ITEM	QTY	PART NUMBER	TITLE
1	1	101-837	Remote - Manifold - 8 Station Block
2	1	101-824	Check Valve - Modular - Pilot OP MPW-01-2-2090
3	5	101-823	Solenoid - 3C4 Valve
4	1	104-063	Solenoid - 2B2 Valve
5	4	106-923	Bolt - Soc Head - M5 x 90 - 12.9 Black Oxide
6	13	105-387	Hyd. Adaptor - Straight - #8 MOR x #6 FOR
7	13	104-442	Hyd. Adaptor - Straight - #6 MOR x #6 FWEO
9	2	101-822	Solenoid - 3C2 Valve
10	2	104-809	Hyd. Adaptor - Straight - #10 MOR x #8 MORS
11	2	104-825	Hyd. Adaptor - 90° Elbow - #8 FORSX x #8 MORS
12	2	104-805	Hyd. Adapter - Straight - #8 MORS x #8 MOR
13	28	106-922	Bolt - Soc Head - M5 x 45 - 12.9 Black Oxide
16	1	101-803	Hyd. Fitting - Plug - #8 MOR - Hex Socket

Crawler - Hydraulic Solenoid Left Assembly 104-632

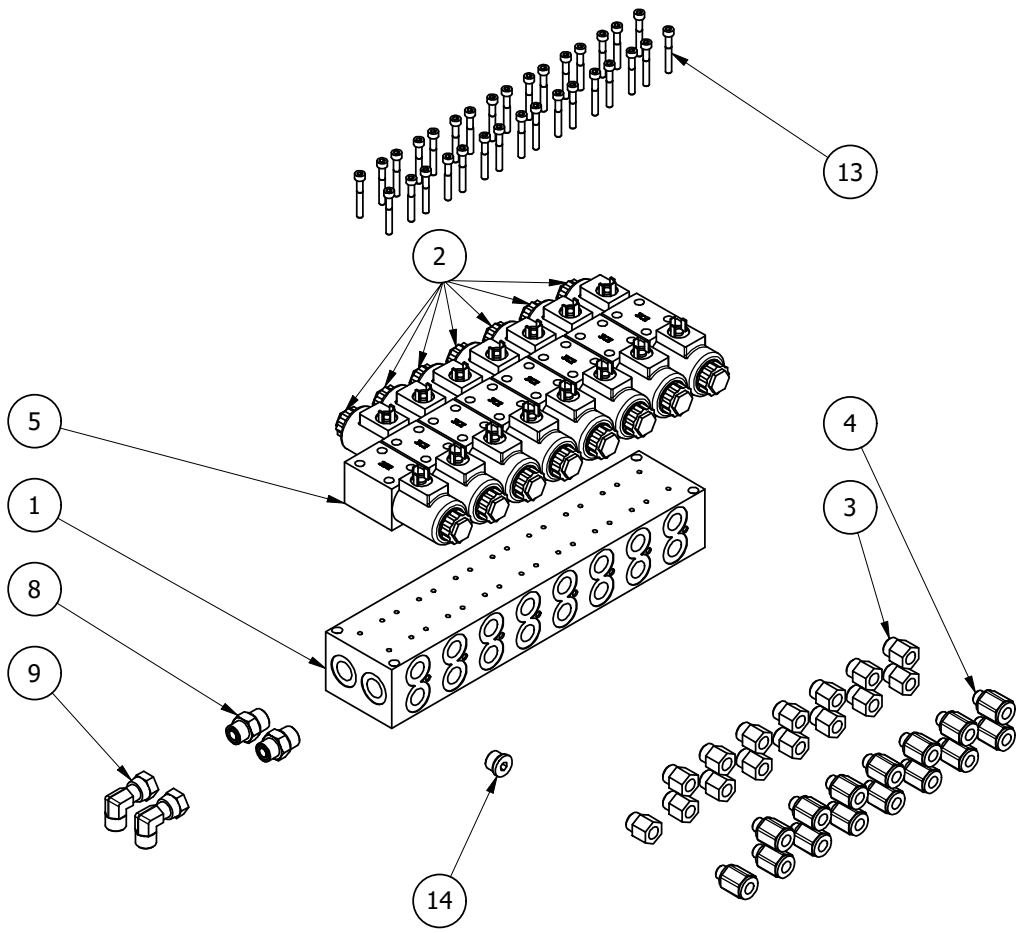

PARTS LIST

ITEM	QTY	PART NUMBER	TITLE
1	1	101-837	Remote - Manifold - 8 Station Block
2	7	101-822	Solenoid - 3C2 Valve
3	15	105-387	Hyd. Adaptor - Straight - #8 MOR x #6 FOR
4	15	104-442	Hyd. Adaptor - Straight - #6 MOR x #6 FWEO
5	1	104-063	Solenoid - 2B2 Valve
8	2	104-809	Hyd. Adaptor - Straight - #10 MOR x #8 MORS
9	2	104-825	Hyd. Adaptor - 90° Elbow - #8 FORSX x #8 MORS
13	32	106-922	Bolt - Soc Head - M5 x 45 - 12.9 Black Oxide
14	1	101-803	Hyd. Fitting - Plug - #8 MOR - Hex Socket

Dump Valve Block with Pressure Relief and Reducing Valve Assembly

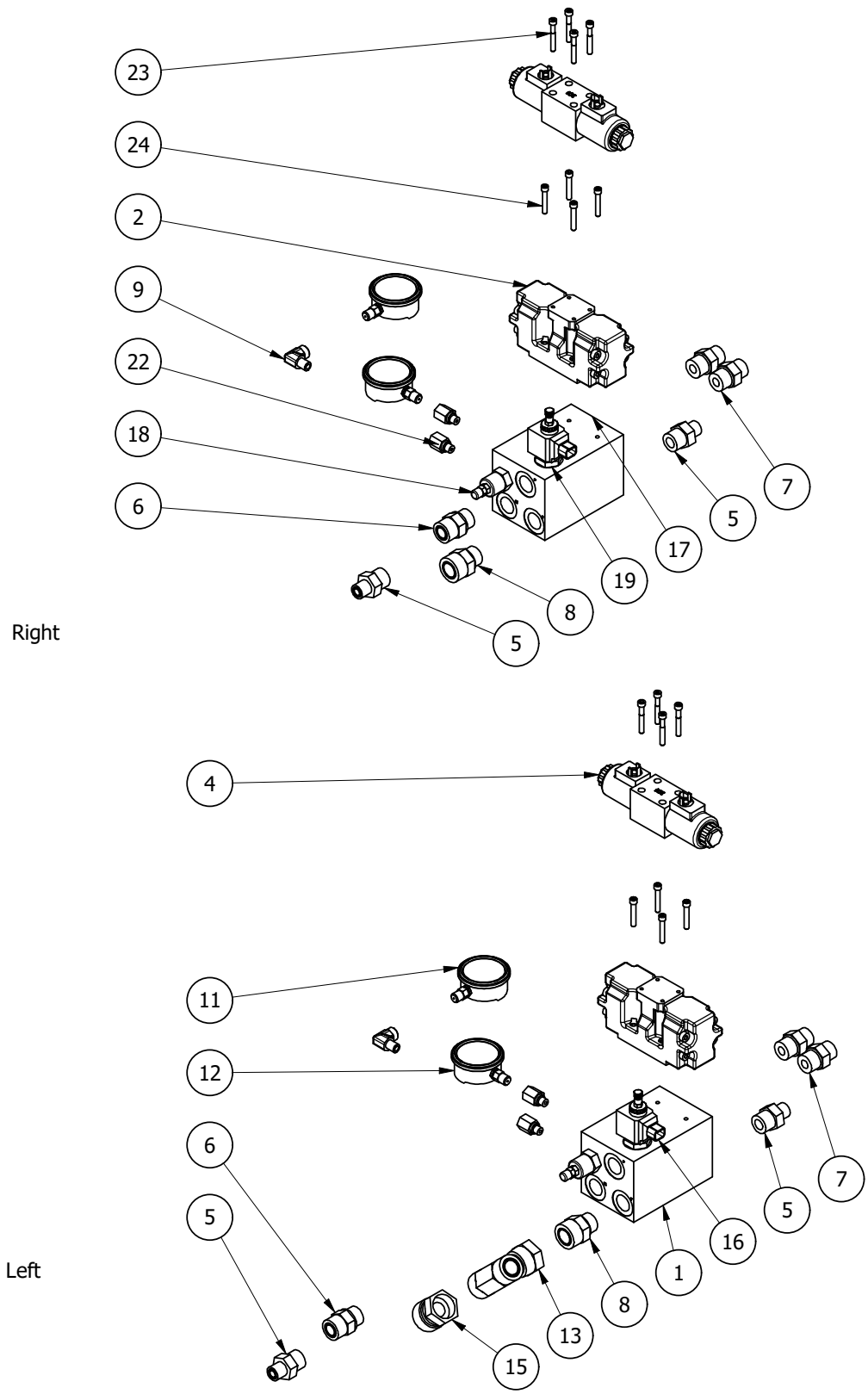

NUHN15000007353

Dump Valve Block with Pressure Relief and Reducing Valve Assembly

PARTS LIST

ITEM	QTY	PART NUMBER	TITLE
1	1	104-031-1	Dump Valve Block with Pressure Relief and Reducing Valve
2	1	104-505	Crawler - Hydraulic Master Valve
4	1	101-823	Solenoid - 3C4 Valve
5	2	105-648	Hyd. Adaptor - Straight - #12 MOR x #8 MORS
6	1	104-450	Hyd. Adaptor - Straight - #12 MOR x #12 MORS
7	2	105-842	Hyd. Adaptor - Straight - #12 MOR x #10 MORS
8	1	106-596	Hyd. Adaptor - Straight - #12 MOR x #16 MORS
9	1	101-537	Hyd. Adaptor - 90° Elbow - #4 MP x #4 FP
11	1	102-593	Gauge - Down Pressure - 3000 Psi - #4 MP
12	1	105-753	Gauge - 5000 Psi - #4 MP
13	1	106-479	Hyd. Adaptor - Tee - #16 MORS x #16 MORS x #16 FORSX
15	1	106-781	Hyd. Fitting - Straight - #20 MORS x #16 FORSX
16	1	106-772	Cartridge Dump Valve
17	1	106-908	Pressure Relief Valve Cartridge
18	1	106-909	Pressure Reducing Valve Cartridge
19	1	106-773	Dump Valve Solenoid Coil
22	2	105-674	Hyd. Adaptor - Straight - #4 MOR x #4 FP
23	4	106-922	Bolt - Soc Head - M5 x 45 - 12.9 Black Oxide
24	4	102-128	Bolt - Socket Head - 0.25" x 1.5" - GR8 Black Oxide

Wheel Drive Block Assembly

Right

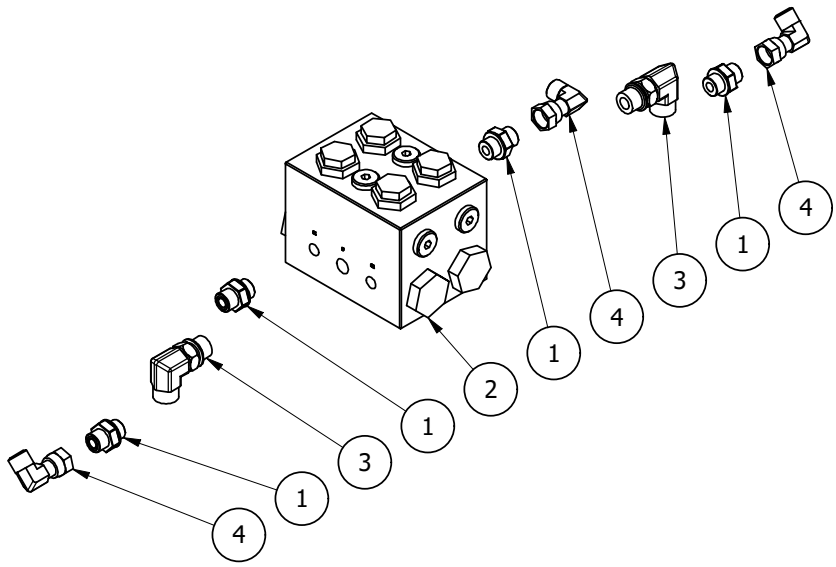

Left

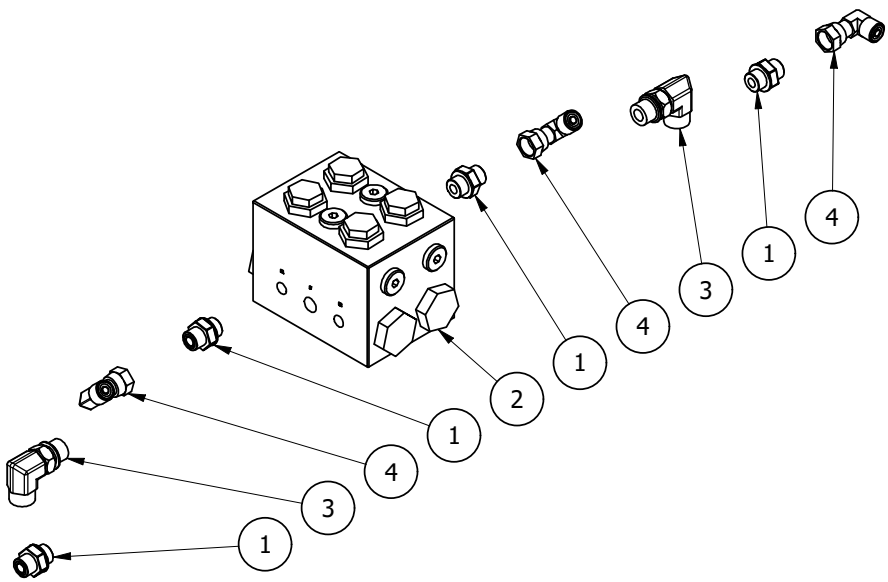

PARTS LIST

ITEM	QTY	PART NUMBER	TITLE
1	4	104-805	Hyd. Adapter - Straight - #8 MORS x #8 MOR
2	1	104-234	Crawler - Wheel Drive Manifold CX-77
3	2	106-478	Hyd. Adaptor - 90° Elbow - #10 MOR x #10 MORS
4	3	104-825	Hyd. Adapter - 90° Elbow - #8 MORS x #8 FORSX

Lift and Steer Manifold Assembly

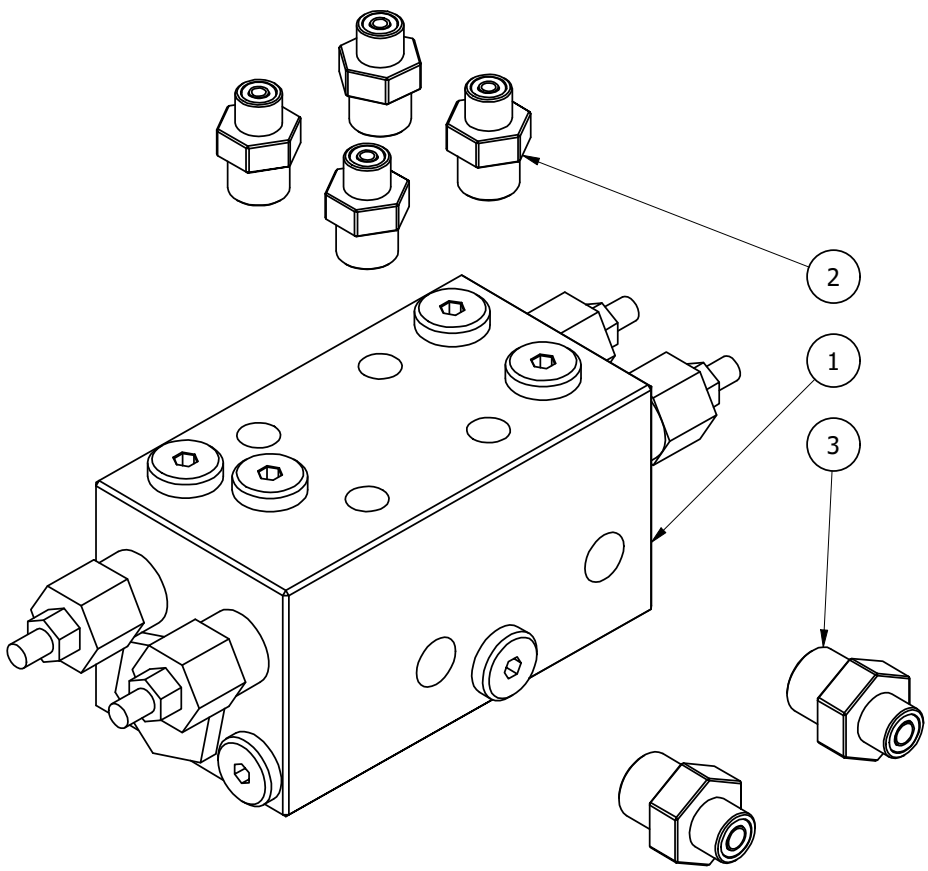

PARTS LIST

ITEM	QTY	PART NUMBER	TITLE
1	1	104-233	Crawler - Lift and Steer Block Manifold CX-75
2	4	104-455	Hyd. Adapter - Straight - #4 MORS x #8 MOR
3	2	104-807	Hyd. Adapter - Straight - #6 MORS x #10 MOR

Crawler - Hydraulic - Oil Cooler - With By Pass 106-513

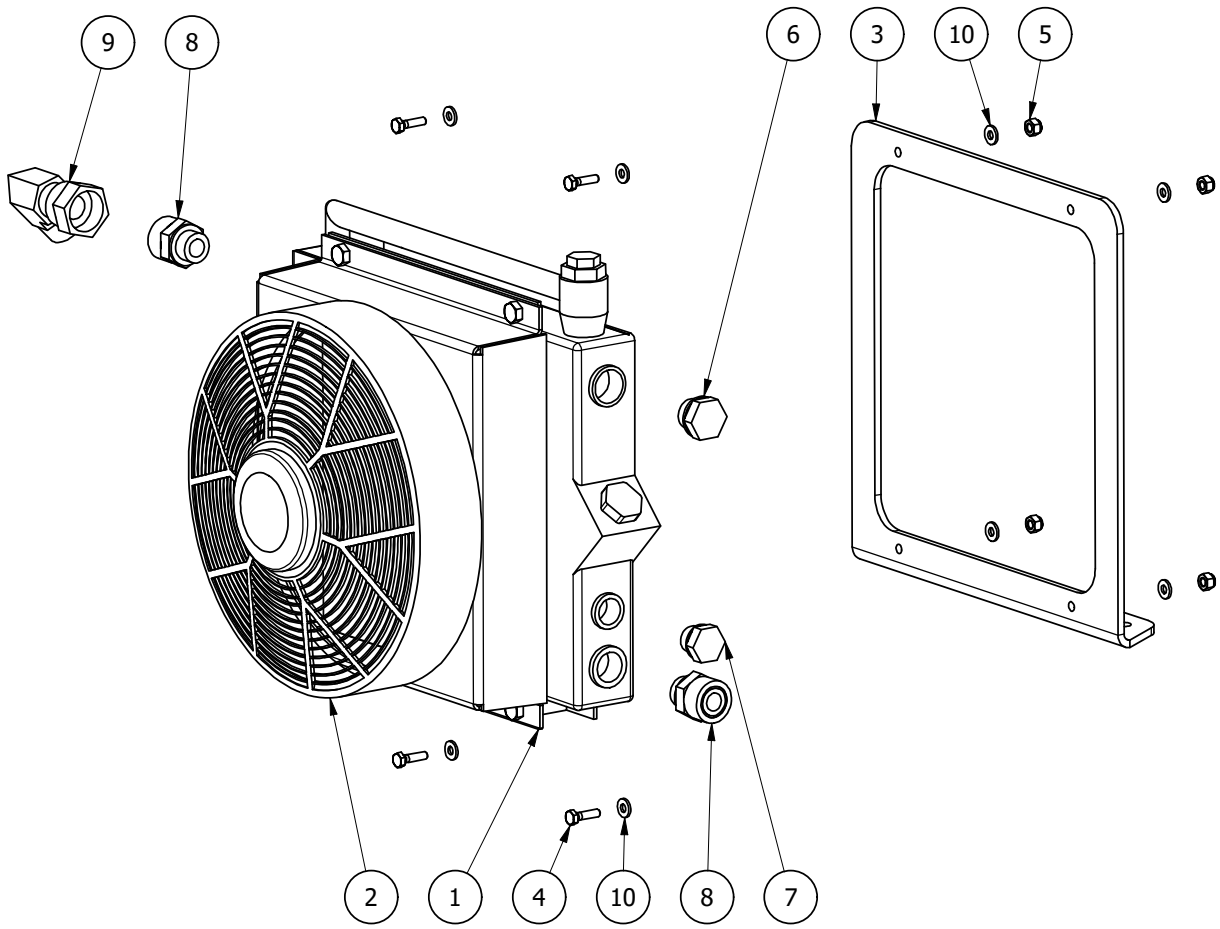

PARTS LIST

ITEM	QTY	PART NUMBER	TITLE
1	1	106-513	Crawler - Hydraulic - Oil Cooler Element - Complete with Fan
2	1	106-581	Hydraulic Oil Replacement Cooler Fan
3	1	106-527	Crawler - Hydraulic - Oil Cooler - Bracket
4	4	101-058	Bolt - Hex Head - 0.25" x 1" - GR5
5	4	102-521	Nut - Nylock - 0.25"
6	1	106-695	Hyd. Fitting - Plug - #12 MBSPP
7	1	105-744	Hyd. Fitting - Plug - M22 x 1.5
8	2	106-693	Hyd. Adaptor - Straight - #12 MBSPP x #16 MORS
9	1	105-554	Hyd. Adaptor - 90° Elbow - #16 MORS x #16 FORSX
10	8	101-019	Washer - Flat - 0.25"

2018 Lagoon Crawler Rear Pipe Assembly 106-879

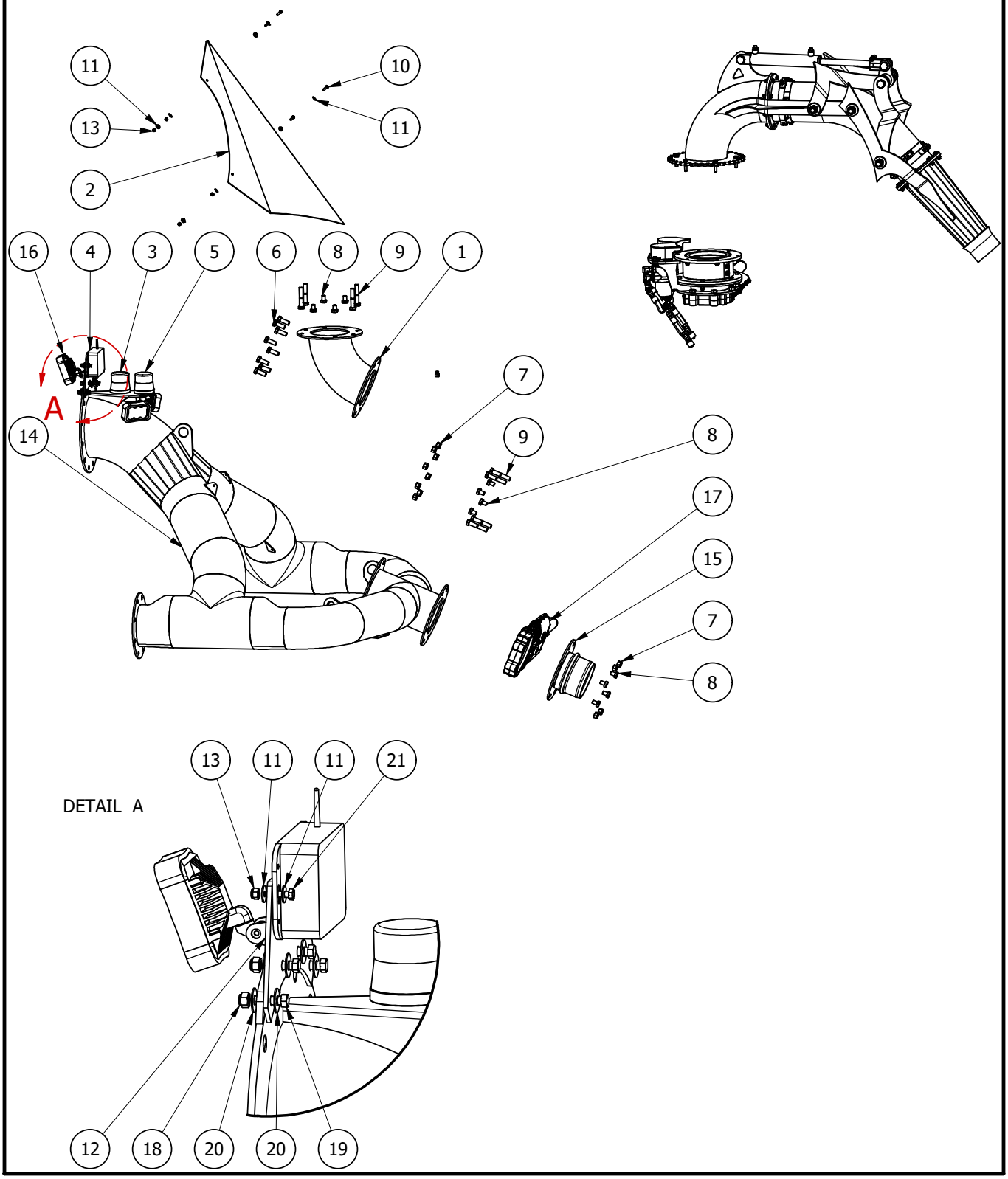

2018 Lagoon Crawler Rear Pipe Assembly 106-879

PARTS LIST

ITEM	QTY	PART NUMBER	TITLE
1	1	106-766	8" ANSI to 8" ANSI 67.5° Elbow 2018 Model
2	1	106-531	Splash Guard
3	1	105-865	Amber Warning Light
4	1	100-946	Remote - Crawler - Receiver
5	1	105-864	Red Warning Light
6	8	101-206	Bolt - Hex Head - 0.75" x 2" - GR5
7	16	101-201	Nut - Nylock - 0.75"
8	16	101-204	Bolt - Hex Head - 0.75" x 1" GR5
9	8	101-210	Bolt - Hex Head - 0.75" x 4" GR5
10	8	101-026	Bolt - Hex Head - 0.3125" x 1" - GR5
11	16	101-020	Washer - Flat - 0.3125"
12	1	106-534	Crawler - Antenna Mount
13	10	101-189	Nut - Nylock - 0.3125"
14	1	106-532	12" to 8" Y Pipe Assembly
15	1	100-517-1	8" ANSI to 8" Male Ringlock
16	3	106-557	Work Light - Rectangular LED - 5400L
17	2	105-693	Metaltecnica Cast Valve - 8" ANSI - with Cylinder - with Discharge
18	20	100-903	Nut - Nylock - 0.4375"
19	20	100-910	Bolt - Hex Head - 0.4375" x 1.5" - GR5
20	8	100-897	Washer - Flat - 0.4375"
21	2	103-771	Bolt - Hex Head - 0.3125" x 1.25" - GR5

8" Agitator Nozzle Assembly 106-879

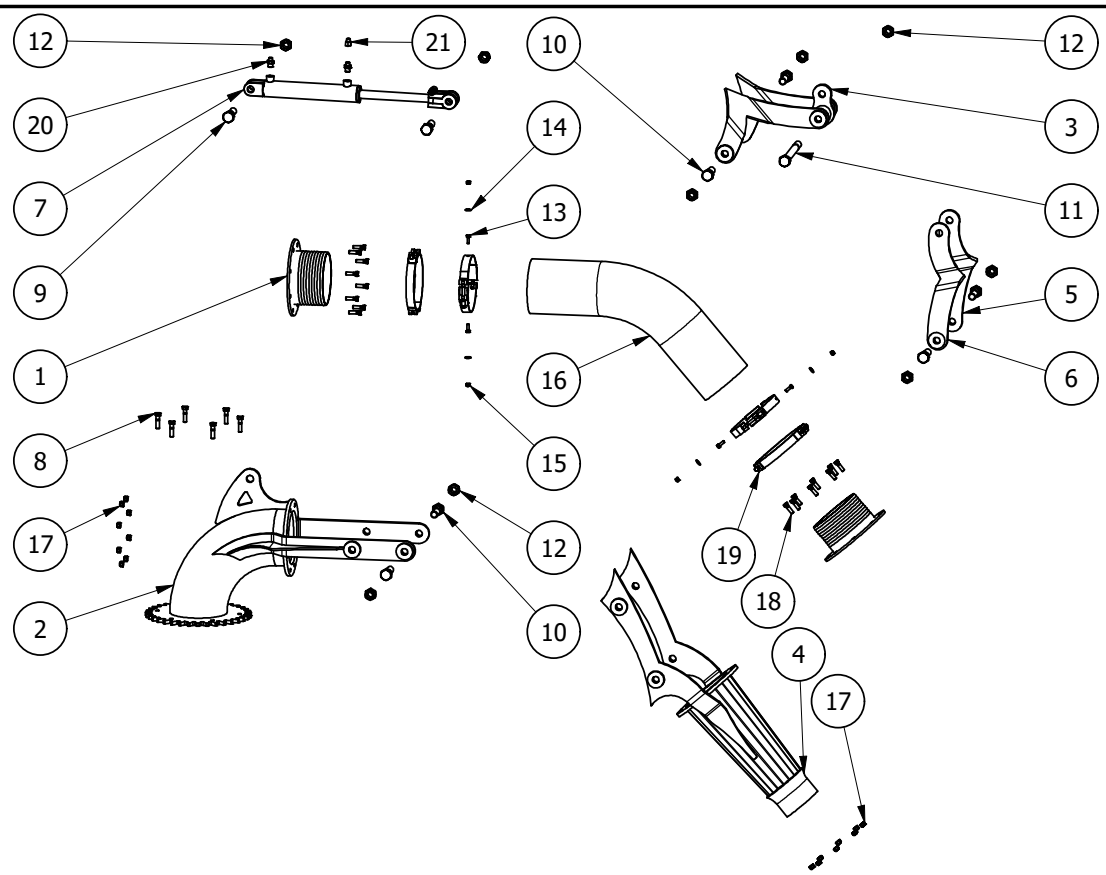

PARTS LIST

ITEM	QTY	PART NUMBER	TITLE
1	2	100-641	Barb with Flange - 8" Hose
2	1	106-678-1	8" Agitator Swivel Elbow (Sprocket Motor Rotate)
3	1	100-643	Agitator - Primary Linkage
4	1	100-481	Agitator - Nozzle 8" to 6"
5	1	100-792	Agitator - Secondary Linkage - Right
6	1	100-642	Agitator - Secondary Linkage - Left
7	1	100-894	Hyd. Cylinder - Welded - 2" x 10" Ftgs 90° to Pins
8	6	100-916	Bolt - Hex Head - 0.5" x 2" - GR5
9	2	100-467	Bolt - Hex Head - 1" x 4" - GR5
10	6	100-920	Bolt - Hex Head - 1" x 3.5" - GR5
11	1	103-772	Bolt - Hex Head - 1" x 12" - GR8
12	9	100-907	Nut - Nylock - 1"
13	8	101-026	Bolt - Hex Head - 0.3125" x 1" - GR5
14	16	101-020	Washer - Flat - 0.3125"
15	10	101-189	Nut - Nylock - 0.3125"
16	1	102-200	Hose - Layflat- Black - 8" x 36"
17	20	100-903	Nut - Nylock - 0.4375"
18	20	100-910	Bolt - Hex Head - 0.4375" x 1.5" - GR5
19	2	103-635	Hose Clamp - 8" - 200-220 - Double Bolt
20	2	104-455	Hyd. Adapter - Straight - #4 MORS x #8 MOR
21	1	104-443	Flow Restrictor - #4 MORS - 0.0475 Orifice

NUHN15000007360

Exhibit 2041
Bazooka v. Nuhn - IPR2023-01161
Page 50 of 51

Agitator Base Rotating Assembly 106-879

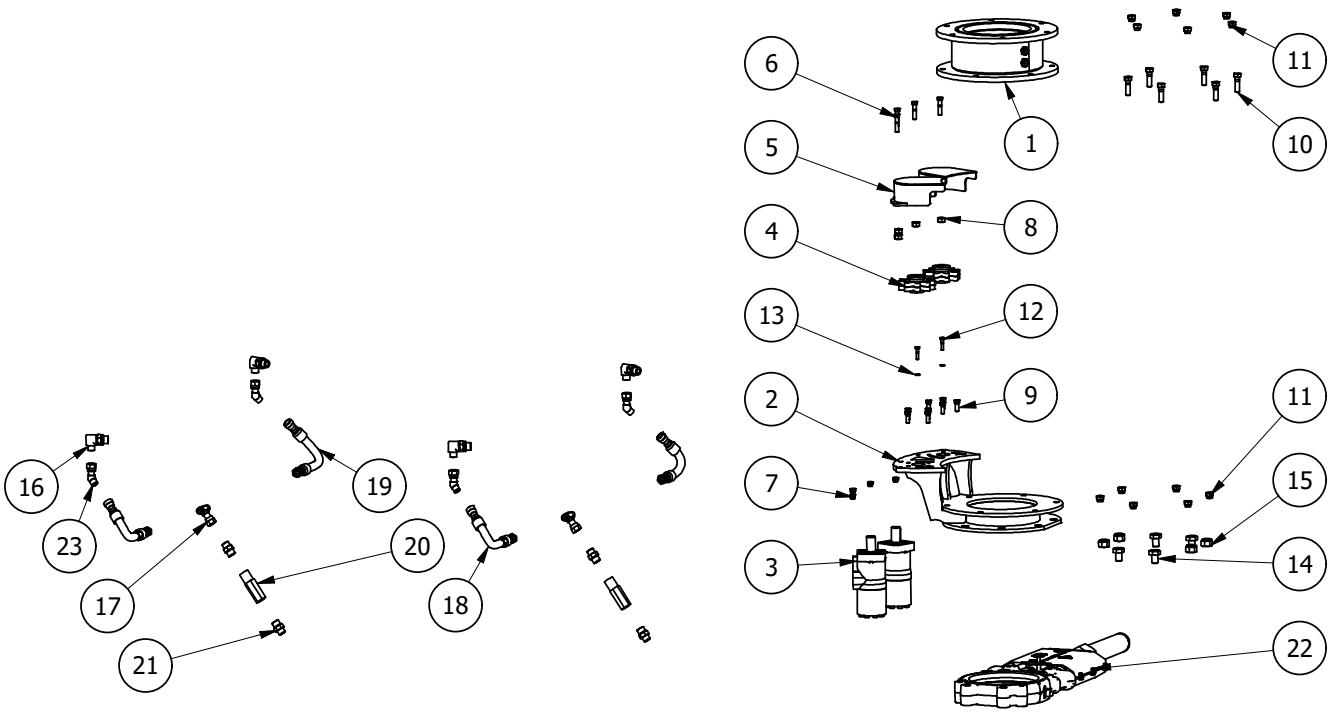

PARTS LIST

ITEM	QTY	PART NUMBER	TITLE
1	1	105-855	Boom Swivel - 8"
2	1	106-535	Lagoon Agitator Swivel Mounting Bracket
3	2	101-967	Hyd. Motor - 400 Series - 4 Bolt
4	2	100-483	Rotator Sprocket (PTO Assembly)
5	2	100-482	Crawler - Sprocket Sheild
6	4	100-908	Bolt - Hex Head - 0.375" x 1.75" - GR5
7	4	100-902	Nut - Nylock - 0.375"
8	4	101-017	Nut - 0.5"
9	8	103-599	Bolt - Hex Head - 0.375" x 1" - GR8
10	6	100-915	Bolt - Hex Head - 0.5" x 1.75" - GR5
11	12	100-904	Nut - Nylock - 0.5"
12	2	103-125	Bolt - Hex Head - 0.25" x 1.25" GR5
13	2	103-145	Washer - Lock - 0.25"
14	8	101-204	Bolt - Hex Head - 0.75" x 1" GR5
15	4	101-201	Nut - Nylock - 0.75"
16	4	104-810	Hyd. Adaptor - 90° Elbow - #10 MOR x #8 MORS
17	2	104-829	Hyd. Adaptor - Tee - #8 MORS x #8 MORS x #8 FORSX
18	2	106-775	Hydraulic Hose Assembly - 2018 Crawler - #122 OR #123
19	2	106-774	Hydraulic Hose Assembly - 2018 Crawler - #120 OR #121
20	2	106-768	Flow Restrictor - 5 GPM
21	4	104-809	Hyd. Adaptor - Straight - #10 MOR x #8 MORS
22	2	105-693	Metaltecnica Cast Valve - 8" ANSI - with Cylinder - with Discharge
23	4	104-826	Hyd. Adapter - 45° Elbow #8 MORS x #8 FORSX