PTO/SB/16 (03-13)
Approved for use through 01/31/2014. OMB 0651-0032
U.S. Patent and Trademark Office; U.S. DEPARTMENT OF COMMERCE
Under the Paperwork Reduction Act of 1995 no persons are required to respond to a collection of information unless it displays a valid OMB control number

PROVISIONAL APPLICATION FOR PATENT COVER SHEET – Page 1 of 2

This is a request for filing a PROVISIONAL APPLICATION FOR PATENT under 37 CFR 1.53(c).

Express Mail Label No. _____

INVENTOR(S)

Given Name (first and middle [if any])	Family Name or Surname	Residence (City and either State or Foreign Country)
Ian	Nuhn	Sebringville, Canada

Additional inventors are being named on the _____ separately numbered sheets attached hereto.

TITLE OF THE INVENTION (500 characters max):

AMPHIBIOUS PUMPING VEHICLE

Direct all correspondence to: **CORRESPONDENCE ADDRESS**

☑ The address corresponding to Customer Number: 59115

OR

☐ Firm or Individual Name

Address

City	State	Zip
Country	Telephone	Email

ENCLOSED APPLICATION PARTS (*check all that apply*)

☐ Application Data Sheet. See 37 CFR 1.76.

☑ Drawing(s) *Number of Sheets* 8

☑ Specification (e.g., description of the invention) *Number of Pages* 16

☐ CD(s), Number of CDs _____

☐ Other (specify) _____

Fees Due: Filing Fee of $260 ($130 for small entity) ($65 for micro entity). If the specification and drawings exceed 100 sheets of paper, an application size fee is also due, which is $400 ($200 for small entity) ($100 for micro entity) for each additional 50 sheets or fraction thereof. See 35 U.S.C. 41(a)(1)(G) and 37 CFR 1.16(s).

METHOD OF PAYMENT OF THE FILING FEE AND APPLICATION SIZE FEE FOR THIS PROVISIONAL APPLICATION FOR PATENT

☑ Applicant asserts small entity status. See 37 CFR 1.27.

☐ Applicant certifies micro entity status. See 37 CFR 1.29.
Applicant must attach form PTO/SB/15A or B or equivalent.

☐ A check or money order made payable to the *Director of the United States Patent and Trademark Office* is enclosed to cover the filing fee and application size fee (if applicable).

☑ Payment by credit card. Form PTO-2038 is attached.

☐ The Director is hereby authorized to charge the filing fee and application size fee (if applicable) or credit any overpayment to Deposit Account Number: _____.

130.00

TOTAL FEE AMOUNT ($)

USE ONLY FOR FILING A PROVISIONAL APPLICATION FOR PATENT

This collection of information is required by 37 CFR 1.51. The information is required to obtain or retain a benefit by the public which is to file (and by the USPTO to process) an application. Confidentiality is governed by 35 U.S.C. 122 and 37 CFR 1.11 and 1.14. This collection is estimated to take 10 hours to complete, including gathering, preparing, and submitting the completed application form to the USPTO. Time will vary depending upon the individual case. Any comments on the amount of time you require to complete this form and/or suggestions for reducing this burden, should be sent to the Chief Information Officer, U.S. Patent and Trademark Office, U.S. Department of Commerce, P.O. Box 1450, Alexandria, VA 22313-1450. DO NOT SEND FEES OR COMPLETED FORMS TO THIS ADDRESS. **SEND TO: Commissioner for Patents, P.O. Box 1450, Alexandria, VA 22313-1450.**

If you need assistance in completing the form, call 1-800-PTO-9199 and select option 2.

Under the Paperwork Reduction Act of 1995 no persons are required to respond to a collection of information unless it displays a valid OMB control number

PROVISIONAL APPLICATION FOR PATENT COVER SHEET – Page 2 of 2

The invention was made by an agency of the United States Government or under a contract with an agency of the United States Government.

- [x] No.
- [ ] Yes, the invention was made by an agency of the U.S. Government. The U.S. Government agency name is: _____

  _____
- [ ] Yes, the invention was made under a contract with an agency of the U.S. Government. The name of the U.S. Government agency and Government contract number are: _____

  _____

WARNING:

Petitioner/applicant is cautioned to avoid submitting personal information in documents filed in a patent application that may contribute to identity theft. Personal information such as social security numbers, bank account numbers, or credit card numbers (other than a check or credit card authorization form PTO-2038 submitted for payment purposes) is never required by the USPTO to support a petition or an application. If this type of personal information is included in documents submitted to the USPTO, petitioners/applicants should consider redacting such personal information from the documents before submitting them to the USPTO. Petitioner/applicant is advised that the record of a patent application is available to the public after publication of the application (unless a non-publication request in compliance with 37 CFR 1.213(a) is made in the application) or issuance of a patent. Furthermore, the record from an abandoned application may also be available to the public if the application is referenced in a published application or an issued patent (see 37 CFR 1.14). Checks and credit card authorization forms PTO-2038 submitted for payment purposes are not retained in the application file and therefore are not publicly available.

SIGNATURE /Robert A.H. Brunet, 55158/ DATE August 19, 2013

TYPED OR PRINTED NAME Robert A.H. Brunet REGISTRATION NO. 55,158 (*if appropriate*)

TELEPHONE 519-474-0700 DOCKET NUMBER NUN-0007-USP

Privacy Act Statement

The **Privacy Act of 1974 (P.L. 93-579)** requires that you be given certain information in connection with your submission of the attached form related to a patent application or patent. Accordingly, pursuant to the requirements of the Act, please be advised that: (1) the general authority for the collection of this information is 35 U.S.C. 2(b)(2); (2) furnishing of the information solicited is voluntary; and (3) the principal purpose for which the information is used by the U.S. Patent and Trademark Office is to process and/or examine your submission related to a patent application or patent. If you do not furnish the requested information, the U.S. Patent and Trademark Office may not be able to process and/or examine your submission, which may result in termination of proceedings or abandonment of the application or expiration of the patent.

The information provided by you in this form will be subject to the following routine uses:

1. The information on this form will be treated confidentially to the extent allowed under the Freedom of Information Act (5 U.S.C. 552) and the Privacy Act (5 U.S.C 552a). Records from this system of records may be disclosed to the Department of Justice to determine whether disclosure of these records is required by the Freedom of Information Act.
2. A record from this system of records may be disclosed, as a routine use, in the course of presenting evidence to a court, magistrate, or administrative tribunal, including disclosures to opposing counsel in the course of settlement negotiations.
3. A record in this system of records may be disclosed, as a routine use, to a Member of Congress submitting a request involving an individual, to whom the record pertains, when the individual has requested assistance from the Member with respect to the subject matter of the record.
4. A record in this system of records may be disclosed, as a routine use, to a contractor of the Agency having need for the information in order to perform a contract. Recipients of information shall be required to comply with the requirements of the Privacy Act of 1974, as amended, pursuant to 5 U.S.C. 552a(m).
5. A record related to an International Application filed under the Patent Cooperation Treaty in this system of records may be disclosed, as a routine use, to the International Bureau of the World Intellectual Property Organization, pursuant to the Patent Cooperation Treaty.
6. A record in this system of records may be disclosed, as a routine use, to another federal agency for purposes of National Security review (35 U.S.C. 181) and for review pursuant to the Atomic Energy Act (42 U.S.C. 218(c)).
7. A record from this system of records may be disclosed, as a routine use, to the Administrator, General Services, or his/her designee, during an inspection of records conducted by GSA as part of that agency's responsibility to recommend improvements in records management practices and programs, under authority of 44 U.S.C. 2904 and 2906. Such disclosure shall be made in accordance with the GSA regulations governing inspection of records for this purpose, and any other relevant (*i.e.*, GSA or Commerce) directive. Such disclosure shall not be used to make determinations about individuals.
8. A record from this system of records may be disclosed, as a routine use, to the public after either publication of the application pursuant to 35 U.S.C. 122(b) or issuance of a patent pursuant to 35 U.S.C. 151. Further, a record may be disclosed, subject to the limitations of 37 CFR 1.14, as a routine use, to the public if the record was filed in an application which became abandoned or in which the proceedings were terminated and which application is referenced by either a published application, an application open to public inspection or an issued patent.
9. A record from this system of records may be disclosed, as a routine use, to a Federal, State, or local law enforcement agency, if the USPTO becomes aware of a violation or potential violation of law or regulation.

Electronic Patent Application Fee Transmittal

Application Number:	
Filing Date:	
Title of Invention:	AMPHIBIOUS PUMPING VEHICLE
First Named Inventor/Applicant Name:	Ian Nuhn
Filer:	Robert A.H. Brunet
Attorney Docket Number:	NUN-0007-USP

Filed as Small Entity

Provisional Filing Fees

Description	Fee Code	Quantity	Amount	Sub-Total in USD($)
Basic Filing:				
Provisional Application Filing Fee	2005	1	130	130
Pages:				
Claims:				
Miscellaneous-Filing:				
Petition:				
Patent-Appeals-and-Interference:				
Post-Allowance-and-Post-Issuance:				
Extension-of-Time:				

Description	Fee Code	Quantity	Amount	Sub-Total in USD($)
Miscellaneous:				
			Total in USD ($)	**130**

AMPHIBIOUS PUMPING VEHICLE

Technical Field

[0001] The invention relates to pumps and vehicles equipped for pumping. In particular, the invention relates to manure pumps and amphibious vehicles equipped for pumping liquid manure, such as animal manure contained in a farm lagoon.

Background

[0002] Manure produced during animal husbandry, particularly hog and cattle manure, is transferred by washing to a pit or lagoon for storage prior to removal for land application or further processing. During storage, a crust can develop on the surface of the pit or lagoon that must be disrupted prior to or during removal of the manure. Pumps are employed for this purpose with jets that return a percentage of the manure back to the pit or lagoon in the form of a high volume spray to disrupt the crust and recirculate the manure. Pumps for use in recirculating manure from smaller pits are known; however, these pumps are typically suitable for accessing the pit or lagoon from its edge and are connected to a tractor or similar land vehicle for operational power. They are therefore limited in their ability to recirculate manure to the middle of large lagoons, which are becoming increasing common as the size of animal husbandry operations increases.

[0003] Accordingly, there is a need for improved pumps and vehicles equipped for pumping, particularly pumps and vehicles suitable for use with large manure lagoons.

Summary of the Invention

[0004] According to the invention, there is provided an amphibious pumping vehicle comprising: a floatable vehicle body; ground engaging propulsion structure configured to raise and lower relative to the vehicle body; a fluid pump; a first fluid nozzle configured to direct fluid through the air, the fluid nozzle connected by a fluid

conduit to the fluid pump; and, a power source configured to provide power to both the ground engaging propulsion structure and the fluid pump.

[0005] The floatable vehicle body may be in the shape of a mono-hull, a catamaran or a barge. Floatation of the vehicle body may be provided by a displacement hull, pontoon elements, or buoyant elements, for example foam filled buoyant chambers, such as are used for supporting floating docks. The vehicle body may be made using a variety of suitable materials, for example, fiberglass, aluminum, plastics, steel, etc.

[0006] The ground engaging propulsion structure may comprise ground engaging elements of the type suitable for powering a vehicle across wet or muddy terrain. For example, the ground engaging propulsion structure may comprise an endless track or a set of wheels. The set of wheels may comprise two or more wheels, for example four wheels, six wheels or eight wheels. May be provided in pairs with one wheel of each pair disposed on opposite sides of the vehicle. When the vehicle comprises a set of wheels, any number of the wheels may be driven in order to provide propulsion for the vehicle. Although at least two wheels may be driven, it is preferred that at least four wheels are driven. Although the vehicle may be provided with steering structure configured to change direction of one or more pairs of wheels, it is preferred that the wheels are independently driven at variable speeds, allowing them to be fixed in direction relative to the vehicle body. This provides directional control of the vehicle, even in wet or muddy conditions where conventional steering is likely to be ineffective due to sliding of the steerable set of wheels. A variety of drive mechanisms may be used to operate the wheels independently at variable speed; for example, at least one motor may be connected to each wheel that is hydraulically or electrically operable at variable speed. A transmission may alternatively be provided with structure configured to allow each wheel to be operated at variable speeds.

[0007] The ground engaging propulsion structure is configured to raise and lower relative to the vehicle body. Raising and lowering may be provided by telescoping structure or lever structure configured to pivot relative to the vehicle body.

The lever structure may comprise a linear actuator that is driven, for example hydraulically, to cause pivoting of the lever arm relative to the vehicle body and thereby raise or lower the wheels. Each wheel is preferably raised or lowered at the same time. Alternatively, the lever structure may comprise a planetary drive that is either mechanically or hydraulically powered to cause pivoting of the lever arm.

[0008] The vehicle further comprises a power source configured to provide power to both the ground engaging propulsion structure and the fluid pump. The power source may be self-contained on the vehicle or may be linked to shore. For example, the power source may comprise an internal combustion engine, a fuel-cell, electric batteries, etc. The power source may comprise an electric motor that may be driven from shore via an electrical cable. The power source may be connected to a generator for supplying electrical power to electrical systems on board the vehicle. The power source may be connected to a hydraulic pump for supplying hydraulic fluid pressure to hydraulic systems on board the vehicle. The power source may be connected to the fluid pump hydraulically, electrically, or via a mechanical drive. A single power source may be used to provide power to all vehicle systems, including the fluid pump. In one embodiment, the power source is an internal combustion engine that is connected to the fluid pump and a hydraulic pump via a mechanical drive. The mechanical drive may comprise a gearbox to provide an appropriate rotational speed for the fluid pump. The mechanical drive may comprise a gearbox to provide an appropriate rotational speed for the hydraulic pump. The fluid pump and hydraulic pump may be operated at the same or different rotational speeds.

[0009] The fluid pump may comprise a pump housing configured for immersion within the fluid. The pump housing may comprise a bottom fluid inlet and at least two tangential fluid outlets. A greater number of tangential fluid outlets may be provided, for example three fluid outlets. The tangential fluid outlets may be combined into a single fluid conduit for directing the combined output of the fluid pump to a desired location. The vehicle may comprise structure configured to cause raising and lowering of the fluid pump, especially the fluid pump housing, relative to the vehicle body. For example, a hydraulically or electrically driven linear actuator may be provided on the

vehicle and configured to raise and lower the fluid pump. This may be accomplished via a telescoping structure or a lever structure of the vehicle. The tangential fluid outlets may be equipped with flexible or telescoping connections to the single fluid conduit. Lowering the fluid pump for immersion into the fluid obviates the need for priming the fluid pump, which can be problematic when the fluid is manure comprising solid materials that can plug the pump or priming structure. Immersion of the pump also simplifies intermittent operation of the pump, due to eliminating potential loss of prime, and reduces the need for pump maintenance.

[0010] The vehicle comprises a first fluid nozzle configured to direct fluid through the air. The fluid nozzle is connected by fluid conduit to the fluid pump. The fluid conduit connecting the fluid nozzle to the fluid pump may comprise the single fluid conduit that is connected to the tangential fluid outlets of the pump. The vehicle may further comprise a plurality of fluid nozzles comprising the first fluid nozzle and at least one second fluid nozzle connected to the fluid conduit. The first fluid nozzle may comprise a front nozzle and the second fluid conduit may comprise the rear nozzle or a pair of rear nozzles. The plurality of fluid nozzles may comprise at least two side fluid nozzles on opposite sides of vehicle connected to the fluid conduit. The at least two side fluid nozzles may comprise a pair of fluid nozzles on opposite sides of the vehicle connected to the fluid conduit; thus, the at least two side fluid nozzles may comprise a total of four fluid nozzles. The vehicle may further comprise valve structure configured to proportion fluid flow between the plurality of fluid nozzles. The valve structure may comprise a valve corresponding to each fluid nozzle. The valve corresponding to each fluid nozzle may be actuatable, for example hydraulically or electrically. The valve structure may be actuatable remotely.

[0011] The plurality of fluid nozzles and the valve structure may cooperate to provide directional control, motive power, or a combination thereof for the vehicle when floating. For example, by closing valve structure associated with the fluid nozzle(s) on the right side of the vehicle, fluid flow is directed to the nozzle(s) on the left side of the vehicle, causing the vehicle to turn to the right. In one embodiment, steering is achieved solely by cooperation of the plurality of fluid nozzles and the valve

structure; accordingly, the vehicle does not comprise a rudder. In one embodiment, movement of the vehicle while floating is achieved solely by cooperation of at least the second fluid nozzle and the valve structure; accordingly, the vehicle does not comprise a propeller.

[0012] One or more fluid nozzles may comprise adjustment structure that is powered and configured to adjust an angle of the fluid nozzle relative to the floatable vehicle body. For example, the first fluid nozzle may comprise first adjustment structure and the second fluid nozzle(s) may comprise second adjustment structure, each adjustment structure configured to adjust an angular orientation of its respective fluid nozzle(s) in a vertical and/or horizontal plane. In one embodiment, both the first fluid nozzle and the second fluid nozzle(s) are adjustable in a vertical plane. The second fluid nozzle(s) is/are adjustable in the vertical plane by an amount sufficient to cause forward or backward movement of the vehicle when floating. In other words, the second fluid nozzle(s) is/are adjustable to point at least partially toward the front of the vehicle at least partially toward the rear of the vehicle. The second fluid nozzle(s) may be configured to direct fluid through the air in a substantially downward direction. The first fluid nozzle may be configured to direct fluid through the air in a substantially upward direction. The side fluid nozzle(s) may be configured to direct fluid through the air in a substantially downward direction. One or more side fluid nozzle(s) may comprise adjustment structure configured to adjust an angular orientation of its respective side fluid nozzle(s) in a vertical plane.

[0013] The location of at least the ground engaging propulsion structure, the power source and the fluid pump may be selected to provide a desired location for a center of gravity of the vehicle. The desired location for the center of gravity of the vehicle may be selected to improve handling characteristics of the vehicle while floating. The center of gravity may be located along the longitudinal centerline of the vehicle. The center of gravity may be located substantially in the middle of the vehicle, for example at an intersection of longitudinal centerline of the vehicle and the transverse centerline of the vehicle. The center of gravity may be located rearward of the transverse centerline of the vehicle. The center of gravity may be located forward

of the transverse centerline of the vehicle. Thus the ground engaging propulsion structure, power source, and fluid pump cooperate together to improve handling characteristics of the vehicle.

[0014] The vehicle may comprise remote control structure configured to cause the vehicle to be remotely controllable by an operator remote from the vehicle. The vehicle may be remotely controllable by an operator remote from the vehicle when the vehicle is ground engaging and when the vehicle is floating. The remote control structure may comprise a wireless transmitter and a wireless receiver. The remote control structure may be configured to control the speed and or direction of the vehicle when ground engaging and when floating. The remote control structure may be configured to control an amount of fluid flow from at least the first nozzle. The remote control structure may be configured to control an angular orientation of at least the first nozzle relative to the vehicle body. The remote control structure may be configured to control an amount of fluid flow from at least the second nozzle(s). The remote control structure may be configured to control an angular orientation of at least the second nozzle(s) relative to the vehicle body. The remote control structure may be configured to control the valve structure in order to proportion fluid flow between the plurality of fluid nozzles. The remote control structure may be configured to control rotational speed of the fluid pump. The remote control structure may be configured to raise and lower the fluid pump. The remote control structure may be configured to raise and lower the ground engaging propulsion structure. The remote control structure may be configured to start and stop the power source.

[0015] Further features of the invention will be described or will become apparent in the course of the following description.

Brief Description of the Drawings

[0016] In order that the invention may be more clearly understood, embodiments thereof will now be described in detail by way of example, with reference to the accompanying drawings, in which:

[0017] Fig. 1 shows a perspective view of an embodiment of the vehicle with wheels lowered;

[0018] Fig. 2 shows another perspective view of the vehicle with wheels raised;

[0019] Fig. 3 shows a perspective view of the underside of the vehicle; and,

[0020] Fig. 4 shows a perspective view of a set of wheels of the vehicle from the underside of the vehicle;

[0021] Fig. 5 shows a perspective view of the first fluid nozzle of vehicle;

[0022] Fig. 6 shows a perspective view of a second fluid nozzle of the vehicle;

[0023] Fig. 7 shows a perspective view of a mechanical drive connecting the power source of the vehicle to the fluid pump and a hydraulic pump of the vehicle;

[0024] Fig. 8 shows a perspective view of the fluid pump from the underside of the vehicle.

Detailed Description

[0025] In describing the figures, like features are referred to by like reference numerals. Although not all features indicated on a particular drawing are necessarily described with reference to that drawing, all of the features are described with reference to at least one of the drawings.

[0026] Referring to Figs. 1-3, an amphibious vehicle comprises a vehicle body 1 incorporating buoyant elements 2. The buoyant elements comprise flotation tanks of the type that may be foam filled and used, for example, in the construction of floating docks. The vehicle comprises a ground engaging propulsion structure comprising two sets of wheels 3, 4. Each wheel is rotatably mounted to lever structure 5 that is pivotally attached to the vehicle body. Each lever structure 5 is driven by a hydraulic actuator 6 that is operable to cause raising and lowering of the wheels 3, 4 by pivoting of the lever structure 5. A power source 7 comprising an internal combustion engine,

for example a diesel engine, is mounted to the vehicle body. A mechanical drive 8 connects the power source 7 to the fluid pump 9 and a hydraulic pump 10 that is used to provide hydraulic system fluid pressure for the vehicle.

[0027] The fluid pump 9 comprises a pump housing 18 with three tangential fluid outlets 19 that are combined into a single fluid conduit 20. The single fluid conduit 20 is then split into left side 21 and right side 22 fluid conduits which connect at the front and rear of the vehicle to form a complete circuit. The fluid pump 9 is thus fluidically connected to all fluid nozzles of the vehicle via the fluid conduits 20-22.

[0028] A first fluid nozzle 11 is provided at a front of the vehicle. The first fluid nozzle 11 comprises first articulation means 12 that is hydraulically powered to cause the nozzle to change angular orientation relative to the vehicle body 1 in a vertical plane. A pair of second fluid nozzles 13 is provided at a rear of the vehicle. The second fluid nozzles 13 comprise a second articulation means 14 that is hydraulically powered to cause the nozzles to change angular orientation relative to the vehicle body 1 in a vertical plane. The first and second fluid nozzles are part of a plurality of fluid nozzles of the vehicle. The plurality of fluid nozzles further comprises side fluid nozzles 16, 17 on opposite sides of the vehicle. A pair of left side fluid nozzles 16 and a pair of right side fluid nozzles 17 are provided.

[0029] Valve structure comprising a valve 15 corresponding to each fluid nozzle 11, 13, 16, 17 is also provided. The valves 15 are powered and operable to open or close. The valves 15 may be opened fully or partially to proportion flow between the plurality of fluid nozzles. Cooperation between the valves 15 and the plurality of fluid nozzles is used to provide directional control and motive power for the vehicle while floating. For example, proportioning fluid flow from the right side fluid nozzles 17 to the left side fluid nozzles 16 causes the vehicle to turn to the right will floating. Similarly, fluid flow may be proportioned between the first fluid nozzle 11 and the second fluid nozzles 13 to cause the vehicle to move forward or backward. By rotating the second fluid nozzles 13 fully downwardly and then up toward the front of the vehicle using the second articulation means 14, the vehicle may also be directed

rearward and/or slowed in its forward movement speed. Thus, the combination of proportioning flow between the plurality of fluid nozzles using the valve structure and/or articulating the nozzles may be used to control forward, rearward, left and right movement and speed of the vehicle. The flow rate of the fluid pump 9 may also be adjusted to enhance directional and speed control via the plurality of nozzles while floating.

[0030] Referring additionally to Fig. 4, each wheel of the front set of wheels 3 is rotatably attached to its corresponding lever 5 by a spindle 23. Fixedly mounted to lever 5 is a bracket 24 supporting a pair of hydraulic motors 25. Each hydraulic motor 25 has an output gear (not shown) that is engaged with a drive gear 26. The drive gear 26 is fixedly attached to a rim 27 of each wheel 3 concentric with the spindle 23. Referring to the right side wheel of the set of wheels 3 (showing an interior of the rim 27), operation of the hydraulic motors 25 in a clockwise direction causes the drive gear 26 to rotate in a counterclockwise direction, moving the vehicle forward. Reversing the direction of operation of the hydraulic motors 25 causes the vehicle to move rearward. By increasing the rotational speed of the hydraulic motors 25 on the right side relative to the motors 25 on the left side, the vehicle is caused to turn to the left. The motors 25 connected to the rear set of wheels 4 work in a similar manner to those described for the front set of wheels 3. Thus, directional and motive control of the vehicle (forward/reverse) while on land is controlled by varying the relative speed and rotational direction of the hydraulic motors 25.

[0031] Turning now to Fig. 5, the first fluid nozzle 11 is able to change angular direction in a vertical plane relative to the vehicle body 1 through operation of a powered first articulation means 12. The first articulation means 12 comprises a hydraulic first articulation cylinder 28 that is coupled to a four bar linkage 29. The four bar linkage serves to amplify the effective stroke length of the first articulation cylinder 28 to cause the nozzle to move through a larger degree of motion in the vertical plane than if the linkage 29 were not present. The first fluid nozzle 11 is connected to the fluid conduits 21, 22 via a flexible conduit 30 that permits articulation of the nozzle.

Valves 15 are provided to proportion flow to the first fluid nozzle in a manner as described previously.

[0032] Referring to Fig. 6, the second fluid nozzles 13 are connected to the fluid conduits 21, 22 by articulation means 14 that comprises a hydraulic second articulation cylinder 31 mounted to the vehicle body 1 and connected to a rotatable conduit section 32. Actuation of the second articulation cylinder 31 causes the rotatable conduit section 32 to rotate relative to the first and second fluid conduits 21, 22. The second fluid nozzles 13 are provided on rotatable conduit section 32 and thus rotate with the conduit section 32 upon actuation of the articulation cylinder 31. This causes the nozzles 13 to change angular orientation relative to the vehicle body 1 in a vertical plane. The geometry of the second articulation cylinder 31 and the rotatable conduit section 32 is such that the nozzles 13 may be rotated fully downwardly and then upwardly towards the front of the vehicle. This allows an operator to change the amount of forward movement to slow or even reverse forward movement of the vehicle. When operated in conjunction with the valves 15, the nozzles 13 and second articulation structure 14 provide a high degree of control over forward and reverse movement of the vehicle.

[0033] Referring to Fig. 7, the power source 7 comprises an internal combustion engine connected to a mechanical drive 8 that delivers power to the pump 9 (not shown in Fig. 7) and also to the hydraulic pump 10 that is used to provide hydraulic fluid pressure to the vehicle's hydraulic systems. A transmission is provided within the mechanical drive 8 that allows the rotational speed of the fluid pump 9 to be adjusted independently of the rotational speed of the hydraulic pump 10. The power source 7 is thus mechanically connected to both the fluid pump 9 and the hydraulic pump 10.

[0034] Referring to Fig. 8, the fluid pump 9 comprises a pump housing 18 comprising three tangential fluid outlets 19 that are connected via flexible pump outlet conduits 33 to a combiner 34 that is used to combine the fluid output of the tangential fluid outlets 19 into the single conduit 20. A pump actuation cylinder 35 is provided to cause raising and lowering of the pump 9 and especially the pump housing 18 relative

to the vehicle body 1. A telescoping pump support structure 36 is provided for use in combination with the pump actuation cylinder 35. A mechanical drive shaft (not shown) runs through the telescoping pump support structure 36 to provide power to the pump impeller 37. When powered, the impeller 37 draws the fluid to be pumped through an enlarged bottom fluid opening 38 of the pump housing 18. By immersing the pump housing 18 in the fluid, fluid is allowed to enter the pump housing, thereby obviating the need for priming the pump. Raising the pump 9 via the pump actuation cylinder 35 and telescoping pump support structure 36 allows the vehicle to exit the lagoon (or similar fluid reservoir) without damaging the pump. Thus, these structures cooperate with the ground engaging propulsion structure to allow the vehicle to operate on land.

[0035] An example of a pump 9 suitable for use with the vehicle is disclosed in co-pending United States Patent Application 13/038,189 filed March 1, 2011, entitled Pump for Immersion Within a Fluid Reservoir, which is incorporated herein by reference.

[0036] The location of at least the ground engaging propulsion structure, the power source and the fluid pump are selected to provide a desired location for a center of gravity of the vehicle. The desired location for the center of gravity of the vehicle is selected to improve handling characteristics of the vehicle while floating. The center of gravity is located along the longitudinal centerline of the vehicle, substantially in the middle of the vehicle.

[0037] A remote control structure 40 comprises an antenna configured to cause the vehicle to be remotely controllable by an operator remote from the vehicle. The remote control structure comprises a wireless transmitter used by the operator and a wireless receiver on the vehicle. The wireless receiver interfaces with a hydraulic control center on the vehicle to permit control of hydraulically operated components, such as hydraulic cylinders, valves, motors, etc. This allows the operator to control vehicle speed and direction on land or when floating, to raise the wheels and to change the angular orientation of the first and second fluid nozzles. A wireless engine

starter is provided to control operation of the internal combustion engine used as a power source. A set of hydraulic controls is optionally provided to modulate engine speed and/or fluid pump rotational speed. Thus, a variety of functions may be controlled remotely that allow the vehicle to operate on land or when floating.

[0038] In operation, an operator uses the remote controls to maneuver the vehicle to the lagoon entrance, drive the vehicle into the lagoon, raise the ground engaging propulsion structure (wheels), lower the fluid pump, begin pumping fluid with the fluid pump through the fluid conduits and selectively open at least the second fluid nozzles to cause the vehicle to move out on to the surface of the lagoon. The valves associated with the side fluid nozzles may also be opened or closed to provide directional control of the vehicle on the lagoon. Once the vehicle is in the desired position, the valves associated with the first fluid nozzle are opened and the first articulation structure is used to position the first fluid nozzle at a desired angular orientation relative to the vehicle body. This is generally an upward orientation so that the fluid is sprayed widely to break crusts of material floating on the surface of the lagoon. In this manner, fluid is recirculated and directed to desired locations in the lagoon. As fluid is emptied from the lagoon, the floating vehicle is permitted to lower with the fluid level. When the lagoon has been sufficiently emptied, the operator is able to reverse the foregoing process in order to maneuver the vehicle to the lagoon exit, lower the wheels, and drive the vehicle up the muddy bank out of the lagoon.

[0039] The novel features will become apparent to those of skill in the art upon examination of the description. It should be understood, however, that the scope of the claims should not be limited by the embodiments, but are intended by the inventor to be given the broadest interpretation consistent with the wording of the claims and the specification as a whole.

Claims:

1) An amphibious pumping vehicle comprising:

   a floatable vehicle body;

   ground engaging propulsion structure configured to raise and lower relative to the vehicle body;

   a fluid pump;

   a first fluid nozzle configured to direct fluid through the air, the fluid nozzle connected by a fluid conduit to the fluid pump; and,

   a power source configured to provide power to both the ground engaging propulsion structure and the fluid pump.

2) The vehicle according to claim 1, wherein the ground engaging propulsion structure comprises a set of wheels.

3) The vehicle according to claim 2, wherein the set of wheels comprises at least two powered wheels.

4) The vehicle according to claim 3, wherein the set of wheels comprises four powered wheels.

5) The vehicle according to any one of claims 2 to 4, wherein each wheel of the set of wheels is independently powered and is operable at variable speed.

6) The vehicle according to claim 5, wherein the wheels are operable at variable speed by a hydraulic motor.

7) The vehicle according to any one of claims 2 to 6, wherein the wheels are each pivotally attached to the floatable vehicle body by a lever arm that is driven to cause raising and lowering of the wheels relative to the floatable vehicle body.

8) The vehicle according to any one of claims 1 to 7, wherein the power source is connected to a hydraulic pump by a mechanical drive and connected to the fluid pump by the mechanical drive.

9) The vehicle according to any one of claims 1 to 8, wherein the vehicle comprises structure configured to raise and lower the pump relative to the floatable vehicle body.

10) The vehicle according to any one of claims 1 to 9, wherein the fluid pump comprises a pump housing for immersion within the fluid, the pump housing comprising a bottom fluid inlet and at least two tangential fluid outlets.

11) The vehicle according to claim 10, wherein the at least two tangential fluid outlets are combined into the fluid conduit.

12) The vehicle according to any one of claims 1 to 11, wherein the vehicle comprises a plurality of fluid nozzles comprising the first fluid nozzle and at least one second fluid nozzle connected to the fluid conduit.

13) The vehicle according to claim 12, wherein the vehicle further comprises valve structure in the fluid conduit configured to proportion fluid flow between the plurality of fluid nozzles.

14) The vehicle according to claim 13, wherein the plurality of fluid nozzles comprises at least two side fluid nozzles on opposite sides of the vehicle connected to the fluid conduit.

15) The vehicle according to claim 14, wherein the plurality of fluid nozzles and the valve structure co-operate to provide directional control and motive power for the vehicle when floating.

16) The vehicle according to any one of claims 12 to 15, wherein at least the first fluid nozzle comprises first adjustment structure that is powered and configured to adjust an angle of the first fluid nozzle relative to the floatable vehicle body.

17) The vehicle according to any one of claims 12 to 16, wherein the second fluid nozzle comprises second adjustment structure that is powered and configured to adjust an angle of the second fluid nozzle relative to the floatable vehicle body by an amount sufficient to cause forward or backward movement of the vehicle when floating.

18) The vehicle according to any one of claims 1 to 17, wherein the location of the ground engaging propulsion structure, power source and fluid pump are selected to provide a desired location for a center of gravity of the vehicle.

19) The vehicle according to any one of claims 1 to 18, wherein the speed and direction of the vehicle are remotely controllable by an operator remote from the vehicle when the vehicle is ground engaging and when the vehicle is floating.

20) The vehicle according to claim 19, wherein the amount of fluid flow from the first nozzle and the direction of the first nozzle are remotely controllable by an operator remote from the vehicle when the vehicle is floating.

ABSTRACT

An amphibious pumping vehicle comprising: a floatable vehicle body; ground engaging propulsion structure configured to raise and lower relative to the vehicle body; a fluid pump; a first fluid nozzle configured to direct fluid through the air, the fluid nozzle connected by a fluid conduit to the fluid pump; and, a power source configured to provide power to both the ground engaging propulsion structure and the fluid pump. The vehicle is particularly well suited to pumping and recirculating fluid within manure lagoons and is able to be driven up out of the lagoon when the lagoon level has been lowered.

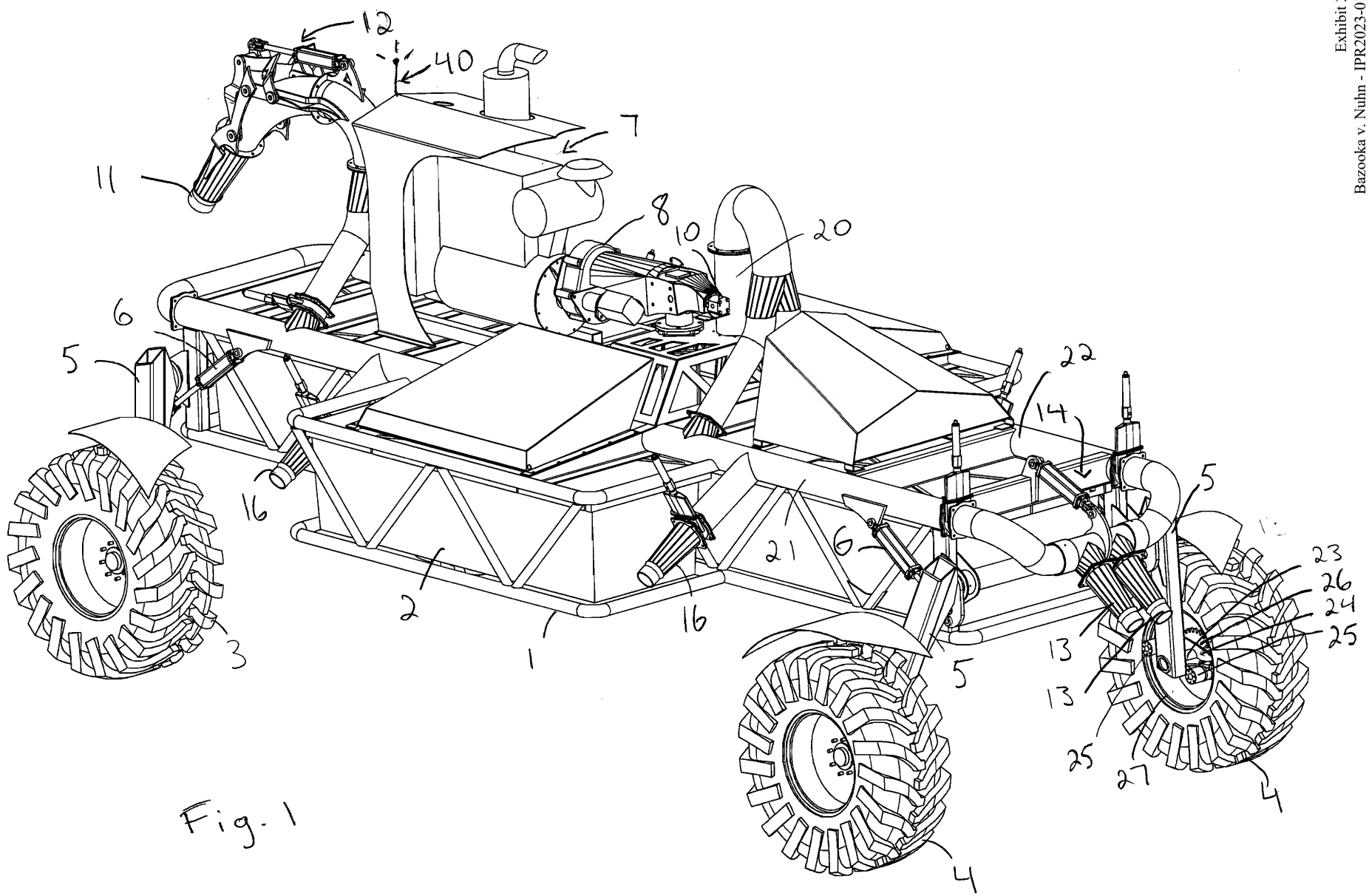

Fig. 1

Fig. 2

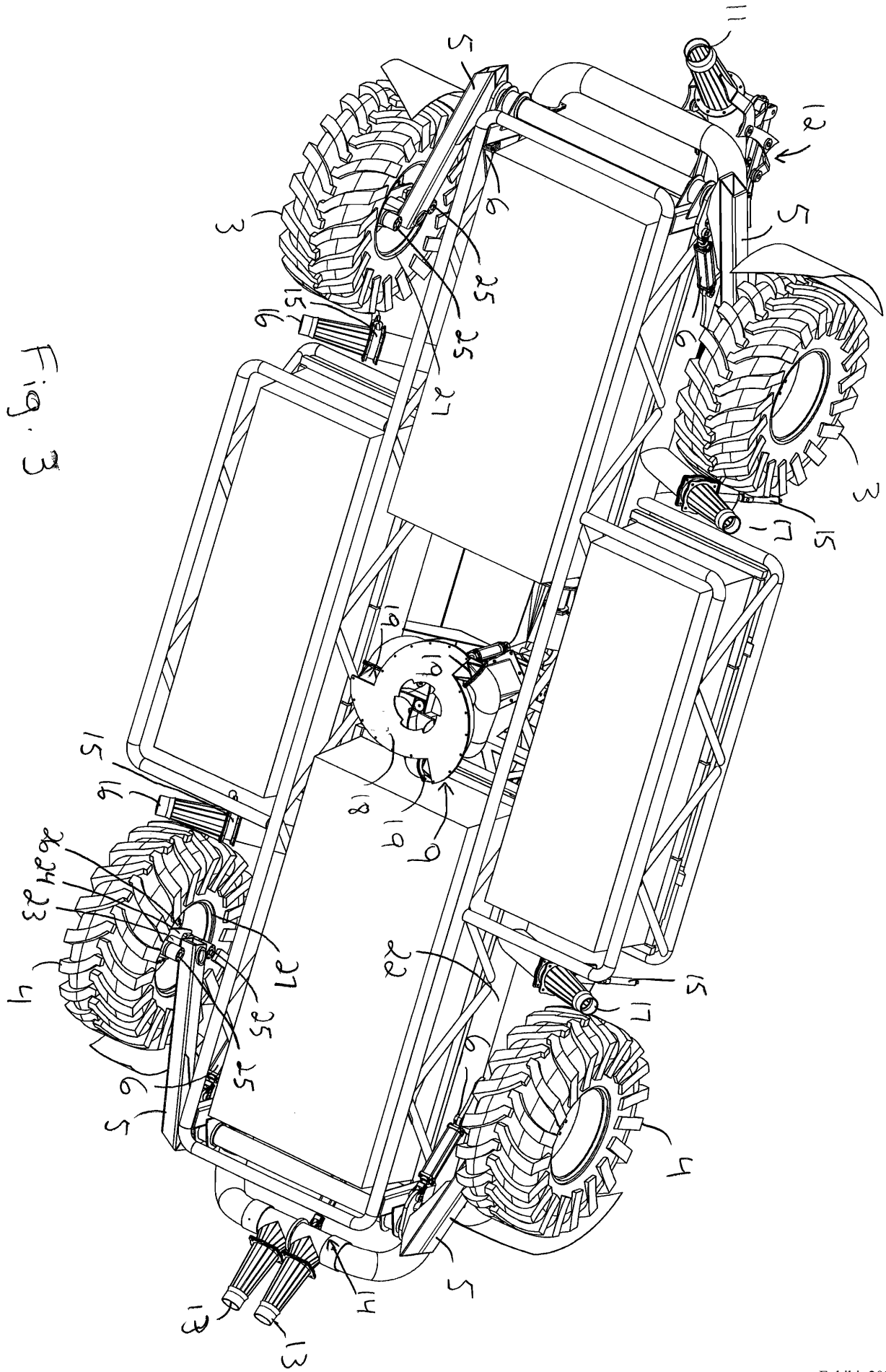

Fig. 3

Fig. 4

Fig. 5

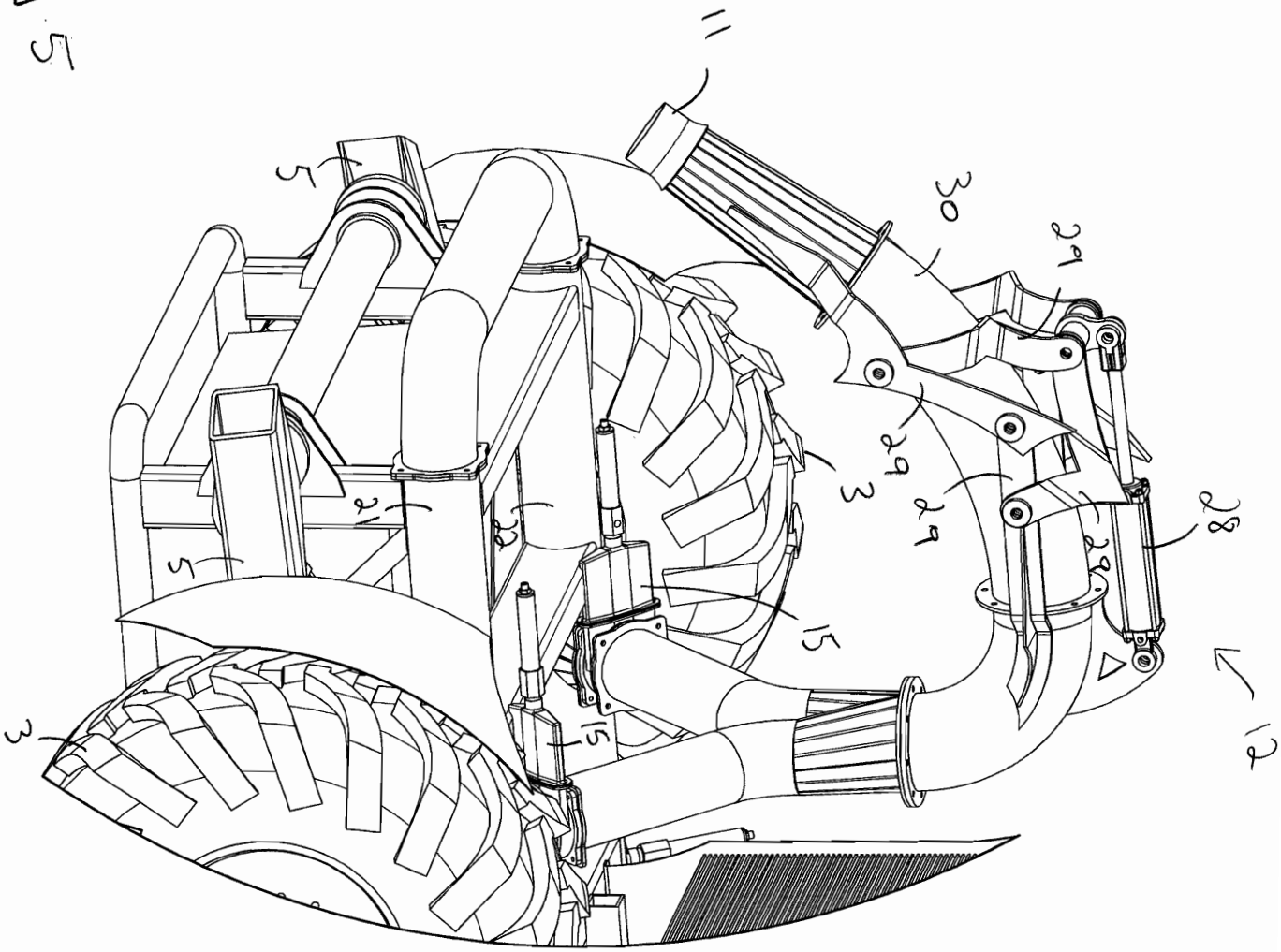

Fig. 6

Fig. 1

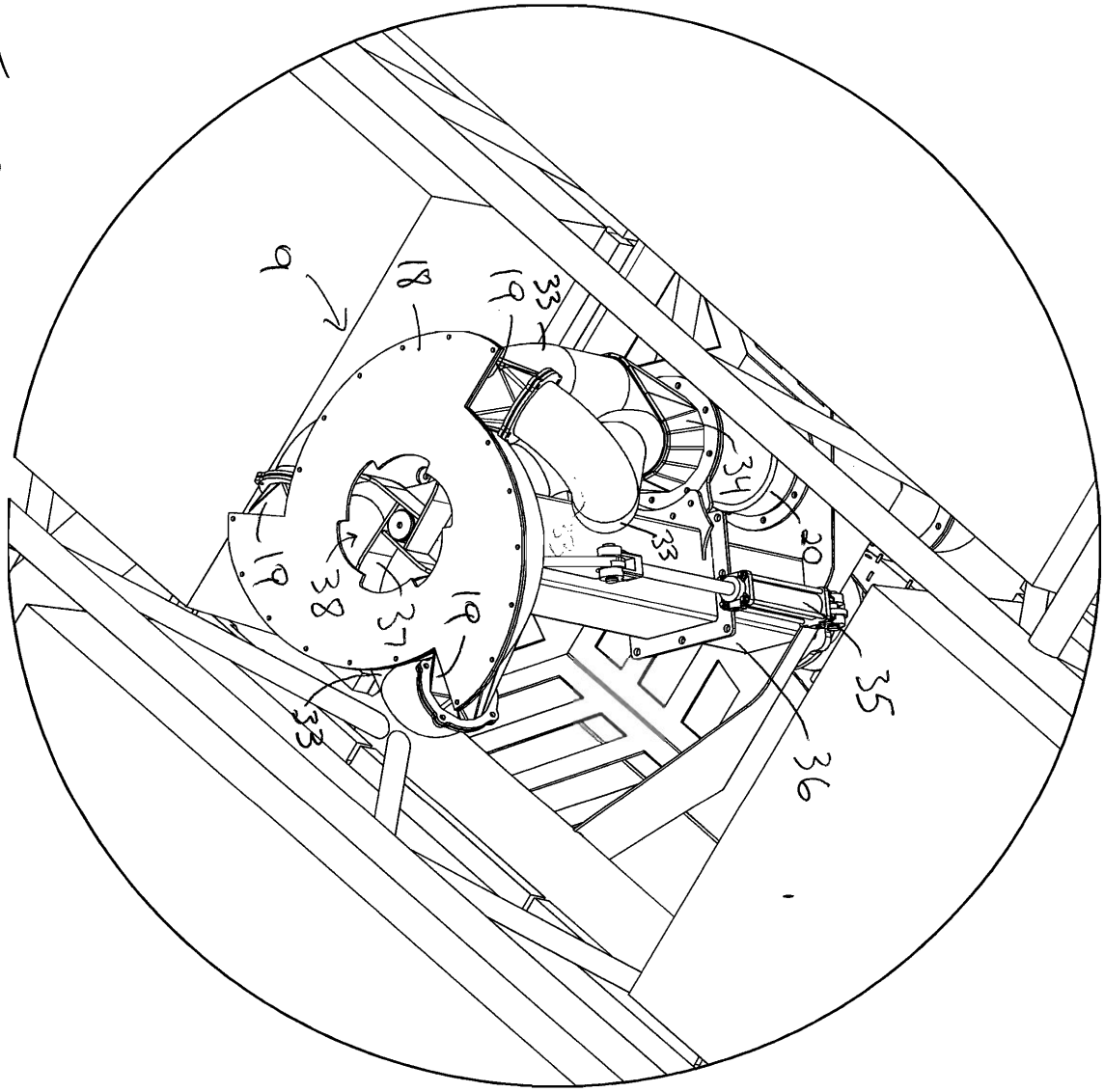

Fig. 8

UNITED STATES PATENT AND TRADEMARK OFFICE

UNITED STATES DEPARTMENT OF COMMERCE
United States Patent and Trademark Office
Address: COMMISSIONER FOR PATENTS
P.O. Box 1450
Alexandria, Virginia 22313-1450
www.uspto.gov

APPLICATION NUMBER	FILING or 371(c) DATE	GRP ART UNIT	FIL FEE REC'D	ATTY.DOCKET.NO	TOT CLAIMS	IND CLAIMS
61/867,598	08/19/2013		130	NUN-0007-USP		

CONFIRMATION NO. 1065

FILING RECEIPT

OC000000063437614

59115
BRUNET & CO. LTD.
10712 MELROSE DR.
KOMOKA, ON N0L-1R0
CANADA

Date Mailed: 08/29/2013

Receipt is acknowledged of this provisional patent application. It will not be examined for patentability and will become abandoned not later than twelve months after its filing date. Any correspondence concerning the application must include the following identification information: the U.S. APPLICATION NUMBER, FILING DATE, NAME OF APPLICANT, and TITLE OF INVENTION. Fees transmitted by check or draft are subject to collection. Please verify the accuracy of the data presented on this receipt. **If an error is noted on this Filing Receipt, please submit a written request for a Filing Receipt Correction. Please provide a copy of this Filing Receipt with the changes noted thereon. If you received a "Notice to File Missing Parts" for this application, please submit any corrections to this Filing Receipt with your reply to the Notice. When the USPTO processes the reply to the Notice, the USPTO will generate another Filing Receipt incorporating the requested corrections**

Inventor(s)

Ian Nuhn, Sebringville, CANADA;

Applicant(s)

Ian Nuhn, Sebringville, CANADA;

Power of Attorney:
Robert Brunet--55158

If Required, Foreign Filing License Granted: 08/26/2013

The country code and number of your priority application, to be used for filing abroad under the Paris Convention, is **US 61/867,598**

Projected Publication Date: None, application is not eligible for pre-grant publication

Non-Publication Request: No

Early Publication Request: No

**** SMALL ENTITY ****

Title

AMPHIBIOUS PUMPING VEHICLE

Statement under 37 CFR 1.55 or 1.78 for AIA (First Inventor to File) Transition Applications: No

PROTECTING YOUR INVENTION OUTSIDE THE UNITED STATES

Since the rights granted by a U.S. patent extend only throughout the territory of the United States and have no effect in a foreign country, an inventor who wishes patent protection in another country must apply for a patent in a specific country or in regional patent offices. Applicants may wish to consider the filing of an international

application under the Patent Cooperation Treaty (PCT). An international (PCT) application generally has the same effect as a regular national patent application in each PCT-member country. The PCT process **simplifies** the filing of patent applications on the same invention in member countries, but **does not result** in a grant of "an international patent" and does not eliminate the need of applicants to file additional documents and fees in countries where patent protection is desired.

Almost every country has its own patent law, and a person desiring a patent in a particular country must make an application for patent in that country in accordance with its particular laws. Since the laws of many countries differ in various respects from the patent law of the United States, applicants are advised to seek guidance from specific foreign countries to ensure that patent rights are not lost prematurely.

Applicants also are advised that in the case of inventions made in the United States, the Director of the USPTO must issue a license before applicants can apply for a patent in a foreign country. The filing of a U.S. patent application serves as a request for a foreign filing license. The application's filing receipt contains further information and guidance as to the status of applicant's license for foreign filing.

Applicants may wish to consult the USPTO booklet, "General Information Concerning Patents" (specifically, the section entitled "Treaties and Foreign Patents") for more information on timeframes and deadlines for filing foreign patent applications. The guide is available either by contacting the USPTO Contact Center at 800-786-9199, or it can be viewed on the USPTO website at http://www.uspto.gov/web/offices/pac/doc/general/index.html.

For information on preventing theft of your intellectual property (patents, trademarks and copyrights), you may wish to consult the U.S. Government website, http://www.stopfakes.gov. Part of a Department of Commerce initiative, this website includes self-help "toolkits" giving innovators guidance on how to protect intellectual property in specific countries such as China, Korea and Mexico. For questions regarding patent enforcement issues, applicants may call the U.S. Government hotline at 1-866-999-HALT (1-866-999-4258).

LICENSE FOR FOREIGN FILING UNDER

Title 35, United States Code, Section 184

Title 37, Code of Federal Regulations, 5.11 & 5.15

GRANTED

The applicant has been granted a license under 35 U.S.C. 184, if the phrase "IF REQUIRED, FOREIGN FILING LICENSE GRANTED" followed by a date appears on this form. Such licenses are issued in all applications where the conditions for issuance of a license have been met, regardless of whether or not a license may be required as set forth in 37 CFR 5.15. The scope and limitations of this license are set forth in 37 CFR 5.15(a) unless an earlier license has been issued under 37 CFR 5.15(b). The license is subject to revocation upon written notification. The date indicated is the effective date of the license, unless an earlier license of similar scope has been granted under 37 CFR 5.13 or 5.14.

This license is to be retained by the licensee and may be used at any time on or after the effective date thereof unless it is revoked. This license is automatically transferred to any related applications(s) filed under 37 CFR 1.53(d). This license is not retroactive.

The grant of a license does not in any way lessen the responsibility of a licensee for the security of the subject matter as imposed by any Government contract or the provisions of existing laws relating to espionage and the national

security or the export of technical data. Licensees should apprise themselves of current regulations especially with respect to certain countries, of other agencies, particularly the Office of Defense Trade Controls, Department of State (with respect to Arms, Munitions and Implements of War (22 CFR 121-128)); the Bureau of Industry and Security, Department of Commerce (15 CFR parts 730-774); the Office of Foreign AssetsControl, Department of Treasury (31 CFR Parts 500+) and the Department of Energy.

NOT GRANTED

No license under 35 U.S.C. 184 has been granted at this time, if the phrase "IF REQUIRED, FOREIGN FILING LICENSE GRANTED" DOES NOT appear on this form. Applicant may still petition for a license under 37 CFR 5.12, if a license is desired before the expiration of 6 months from the filing date of the application. If 6 months has lapsed from the filing date of this application and the licensee has not received any indication of a secrecy order under 35 U.S.C. 181, the licensee may foreign file the application pursuant to 37 CFR 5.15(b).

SelectUSA

The United States represents the largest, most dynamic marketplace in the world and is an unparalleled location for business investment, innovation, and commercialization of new technologies. The U.S. offers tremendous resources and advantages for those who invest and manufacture goods here. Through SelectUSA, our nation works to promote and facilitate business investment. SelectUSA provides information assistance to the international investor community; serves as an ombudsman for existing and potential investors; advocates on behalf of U.S. cities, states, and regions competing for global investment; and counsels U.S. economic development organizations on investment attraction best practices. To learn more about why the United States is the best country in the world to develop technology, manufacture products, deliver services, and grow your business, visit http://www.SelectUSA.gov or call +1-202-482-6800.

Doc Code: PD.TO.AUTH
Document Description: Authorization to access Appl. by Trilateral Office

PTO/SB/39 (07-09)
Approved for use through 07/31/2012. OMB 0651-0031
U.S. Patent and Trademark Office; U.S. DEPARTMENT OF COMMERCE
Under the Paperwork Reduction Act of 1995, no persons are required to respond to a collection of information unless it displays a valid OMB control number.

AUTHORIZATION TO PERMIT ACCESS TO APPLICATION BY PARTICIPATING OFFICES

Send completed form to: Commissioner for Patents
P.O. Box 1450, Alexandria, VA 22313-1450

COMPLETE IF KNOWN	
Application Number	61/867,598
Filing Date	August 19, 2013
First Named Inventor	Nuhn, Ian
Attorney Docket Number	NUN-0007-USP
Title (Required)	AMPHIBIOUS PUMPING VEHICLE

The undersigned hereby grants the USPTO authority to provide the European Patent Office (EPO), the Japan Patent Office (JPO), the Korean Intellectual Property Office (KIPO), the World Intellectual Property Office (WIPO), and any other intellectual property offices in which a foreign application claiming priority to the above-identified patent application is filed access to the above-identified patent application. See 37 CFR 1.14(c) and (h).

In accordance with 37 CFR 1.14(h)(3), access will be provided to a copy of the above-identified application with respect to: 1) the above-identified patent application-as-filed; 2) any foreign application to which the above-identified patent application claims priority under 35 U.S.C. 119(a)-(d) if a copy of the foreign application that satisfies the certified copy requirement of 37 CFR 1.55 has been filed in the above-identified patent application; and 3) any U.S. application-as-filed from which benefit is sought in the above-identified patent application.

In accordance with 37 CFR 1.14(c), access may be provided to information concerning the date of filing the Authorization to Permit Access to Application by Participating Offices.

This written authorization should be submitted prior to the filing of a subsequent foreign application, in which priority is claimed to the above-identified patent application, with any intellectual property office (e.g., the EPO, JPO, KIPO, or DAS Accessing Office). However, if applicant does not wish the EPO, JPO, KIPO, WIPO, or other intellectual property office in which a foreign application claiming priority to the above-identified patent application is filed to have access to the above-identified patent application, this written authorization should not be filed.

No fee will be charged under 37 CFR 1.19(b)(1) for providing a participating intellectual property office with an electronic copy of the above-identified patent application.

This form must be signed by an authorized party in accordance with 37 CFR 1.14(c).

/Robert A.H. Brunet/	2013-10-22
Signature	Date
Robert A.H. Brunet	519-474-0700
Printed or Typed Name	Telephone Number
Agent for the Applicant	55158
Title	Registration Number, if applicable

This collection of information is required by 37 CFR 1.14(h). The information is required to obtain or retain a benefit by the public which is to file (and by the USPTO to process an application). Confidentiality is governed by 35 U.S.C. 122 and 37 CFR 1.11 and 1.14. This collection is estimated to take 6 minutes to complete, including gathering, preparing, and submitting the completed application form to the USPTO. Time will vary depending upon the individual case. Any comments on the amount of time you require to complete this form and/or suggestions for reducing this burden, should be sent to the Chief Information Officer, U.S. Patent and Trademark Office, U.S. Department of Commerce, P.O. Box 1450, Alexandria, VA 22313-1450. DO NOT SEND FEES OR COMPLETED FORMS TO THIS ADDRESS. **SEND TO: Commissioner for Patents, P.O. Box 1450, Alexandria, VA 22313-1450.**

If you need assistance in completing the form, call 1-800-PTO-9199 and select option 2.

Privacy Act Statement

The Privacy Act of 1974 (P.L. 93-579) requires that you be given certain information in connection with your submission of the attached form related to a patent application or patent. Accordingly, pursuant to the requirements of the Act, please be advised that: (1) the general authority for the collection of this information is 35 U.S.C. 2(b)(2); (2) furnishing of the information solicited is voluntary; and (3) the principal purpose for which the information is used by the U.S. Patent and Trademark Office is to process and/or examine your submission related to a patent application or patent. If you do not furnish the requested information, the U.S. Patent and Trademark Office may not be able to process and/or examine your submission, which may result in termination of proceedings or abandonment of the application or expiration of the patent.

The information provided by you in this form will be subject to the following routine uses:

1. The information on this form will be treated confidentially to the extent allowed under the Freedom of Information Act (5 U.S.C. 552) and the Privacy Act (5 U.S.C. 552a). Records from this system of records may be disclosed to the Department of Justice to determine whether the Freedom of Information Act requires disclosure of these records.
2. A record from this system of records may be disclosed, as a routine use, in the course of presenting evidence to a court, magistrate, or administrative tribunal, including disclosures to opposing counsel in the course of settlement negotiations.
3. A record in this system of records may be disclosed, as a routine use, to a Member of Congress submitting a request involving an individual, to whom the record pertains, when the individual has requested assistance from the Member with respect to the subject matter of the record.
4. A record in this system of records may be disclosed, as a routine use, to a contractor of the Agency having need for the information in order to perform a contract. Recipients of information shall be required to comply with the requirements of the Privacy Act of 1974, as amended, pursuant to 5 U.S.C. 552a(m).
5. A record related to an International Application filed under the Patent Cooperation Treaty in this system of records may be disclosed, as a routine use, to the International Bureau of the World Intellectual Property Organization, pursuant to the Patent Cooperation Treaty.
6. A record in this system of records may be disclosed, as a routine use, to another federal agency for purposes of National Security review (35 U.S.C. 181) and for review pursuant to the Atomic Energy Act (42 U.S.C. 218(c)).
7. A record from this system of records may be disclosed, as a routine use, to the Administrator, General Services, or his/her designee, during an inspection of records conducted by GSA as part of that agency's responsibility to recommend improvements in records management practices and programs, under authority of 44 U.S.C. 2904 and 2906. Such disclosure shall be made in accordance with the GSA regulations governing inspection of records for this purpose, and any other relevant (i.e., GSA or Commerce) directive. Such disclosure shall not be used to make determinations about individuals.
8. A record from this system of records may be disclosed, as a routine use, to the public after either publication of the application pursuant to 35 U.S.C. 122(b) or issuance of a patent pursuant to 35 U.S.C. 151. Further, a record may be disclosed, subject to the limitations of 37 CFR 1.14, as a routine use, to the public if the record was filed in an application which became abandoned or in which the proceedings were terminated and which application is referenced by either a published application, an application open to public inspections or an issued patent.
9. A record from this system of records may be disclosed, as a routine use, to a Federal, State, or local law enforcement agency, if the USPTO becomes aware of a violation or potential violation of law or regulation.

UNITED STATES PATENT AND TRADEMARK OFFICE

UNITED STATES DEPARTMENT OF COMMERCE
United States Patent and Trademark Office
Address: COMMISSIONER FOR PATENTS
P.O. Box 1450
Alexandria, Virginia 22313-1450
www.uspto.gov

APPLICATION NUMBER	FILING or 371(c) DATE	GRP ART UNIT	FIL FEE REC'D	ATTY.DOCKET.NO	TOT CLAIMS	IND CLAIMS
61/867,598	08/19/2013		130	NUN-0007-USP		

CONFIRMATION NO. 1065

REPLACEMENT FILING RECEIPT

OC000000064561230

59115
BRUNET & CO. LTD.
10712 MELROSE DR.
KOMOKA, ON N0L-1R0
CANADA

Date Mailed: 10/25/2013

Receipt is acknowledged of this provisional patent application. It will not be examined for patentability and will become abandoned not later than twelve months after its filing date. Any correspondence concerning the application must include the following identification information: the U.S. APPLICATION NUMBER, FILING DATE, NAME OF APPLICANT, and TITLE OF INVENTION. Fees transmitted by check or draft are subject to collection. Please verify the accuracy of the data presented on this receipt. **If an error is noted on this Filing Receipt, please submit a written request for a Filing Receipt Correction. Please provide a copy of this Filing Receipt with the changes noted thereon. If you received a "Notice to File Missing Parts" for this application, please submit any corrections to this Filing Receipt with your reply to the Notice. When the USPTO processes the reply to the Notice, the USPTO will generate another Filing Receipt incorporating the requested corrections**

Inventor(s)

Ian Nuhn, Sebringville, CANADA;

Applicant(s)

Ian Nuhn, Sebringville, CANADA;

Power of Attorney:
Robert Brunet--55158

Permission to Access - A proper **Authorization to Permit Access to Application by Participating Offices** (PTO/SB/39 or its equivalent) has been received by the USPTO.

If Required, Foreign Filing License Granted: 08/26/2013

The country code and number of your priority application, to be used for filing abroad under the Paris Convention, is **US 61/867,598**

Projected Publication Date: None, application is not eligible for pre-grant publication

Non-Publication Request: No

Early Publication Request: No
**** SMALL ENTITY ****
Title

AMPHIBIOUS PUMPING VEHICLE

Statement under 37 CFR 1.55 or 1.78 for AIA (First Inventor to File) Transition Applications: No

PROTECTING YOUR INVENTION OUTSIDE THE UNITED STATES

Since the rights granted by a U.S. patent extend only throughout the territory of the United States and have no effect in a foreign country, an inventor who wishes patent protection in another country must apply for a patent in a specific country or in regional patent offices. Applicants may wish to consider the filing of an international application under the Patent Cooperation Treaty (PCT). An international (PCT) application generally has the same effect as a regular national patent application in each PCT-member country. The PCT process **simplifies** the filing of patent applications on the same invention in member countries, but **does not result** in a grant of "an international patent" and does not eliminate the need of applicants to file additional documents and fees in countries where patent protection is desired.

Almost every country has its own patent law, and a person desiring a patent in a particular country must make an application for patent in that country in accordance with its particular laws. Since the laws of many countries differ in various respects from the patent law of the United States, applicants are advised to seek guidance from specific foreign countries to ensure that patent rights are not lost prematurely.

Applicants also are advised that in the case of inventions made in the United States, the Director of the USPTO must issue a license before applicants can apply for a patent in a foreign country. The filing of a U.S. patent application serves as a request for a foreign filing license. The application's filing receipt contains further information and guidance as to the status of applicant's license for foreign filing.

Applicants may wish to consult the USPTO booklet, "General Information Concerning Patents" (specifically, the section entitled "Treaties and Foreign Patents") for more information on timeframes and deadlines for filing foreign patent applications. The guide is available either by contacting the USPTO Contact Center at 800-786-9199, or it can be viewed on the USPTO website at http://www.uspto.gov/web/offices/pac/doc/general/index.html.

For information on preventing theft of your intellectual property (patents, trademarks and copyrights), you may wish to consult the U.S. Government website, http://www.stopfakes.gov. Part of a Department of Commerce initiative, this website includes self-help "toolkits" giving innovators guidance on how to protect intellectual property in specific countries such as China, Korea and Mexico. For questions regarding patent enforcement issues, applicants may call the U.S. Government hotline at 1-866-999-HALT (1-866-999-4258).

LICENSE FOR FOREIGN FILING UNDER

Title 35, United States Code, Section 184

Title 37, Code of Federal Regulations, 5.11 & 5.15

GRANTED

The applicant has been granted a license under 35 U.S.C. 184, if the phrase "IF REQUIRED, FOREIGN FILING LICENSE GRANTED" followed by a date appears on this form. Such licenses are issued in all applications where the conditions for issuance of a license have been met, regardless of whether or not a license may be required as set forth in 37 CFR 5.15. The scope and limitations of this license are set forth in 37 CFR 5.15(a) unless an earlier license has been issued under 37 CFR 5.15(b). The license is subject to revocation upon written notification. The date indicated is the effective date of the license, unless an earlier license of similar scope has been granted under 37 CFR 5.13 or 5.14.

This license is to be retained by the licensee and may be used at any time on or after the effective date thereof unless it is revoked. This license is automatically transferred to any related applications(s) filed under 37 CFR 1.53(d). This license is not retroactive.

The grant of a license does not in any way lessen the responsibility of a licensee for the security of the subject matter as imposed by any Government contract or the provisions of existing laws relating to espionage and the national security or the export of technical data. Licensees should apprise themselves of current regulations especially with respect to certain countries, of other agencies, particularly the Office of Defense Trade Controls, Department of State (with respect to Arms, Munitions and Implements of War (22 CFR 121-128)); the Bureau of Industry and Security, Department of Commerce (15 CFR parts 730-774); the Office of Foreign AssetsControl, Department of Treasury (31 CFR Parts 500+) and the Department of Energy.

NOT GRANTED

No license under 35 U.S.C. 184 has been granted at this time, if the phrase "IF REQUIRED, FOREIGN FILING LICENSE GRANTED" DOES NOT appear on this form. Applicant may still petition for a license under 37 CFR 5.12, if a license is desired before the expiration of 6 months from the filing date of the application. If 6 months has lapsed from the filing date of this application and the licensee has not received any indication of a secrecy order under 35 U.S.C. 181, the licensee may foreign file the application pursuant to 37 CFR 5.15(b).

SelectUSA

The United States represents the largest, most dynamic marketplace in the world and is an unparalleled location for business investment, innovation, and commercialization of new technologies. The U.S. offers tremendous resources and advantages for those who invest and manufacture goods here. Through SelectUSA, our nation works to promote and facilitate business investment. SelectUSA provides information assistance to the international investor community; serves as an ombudsman for existing and potential investors; advocates on behalf of U.S. cities, states, and regions competing for global investment; and counsels U.S. economic development organizations on investment attraction best practices. To learn more about why the United States is the best country in the world to develop technology, manufacture products, deliver services, and grow your business, visit http://www.SelectUSA.gov or call +1-202-482-6800.

61/867,598 AMPHIBIOUS PUMPING VEHICLE NUN-0007-USP 01-19-2022::10:35:11

Assignments Data

Patent Assignment Abstract of Title

Total Assignments: 1

Application #: 61867598 **Filing Dt:** 08/19/2013 **Patent #:** NONE **Issue Dt:**

PCT #: NONE **Intl Reg #:** **Publication #:** NONE **Pub Dt:**

Inventor: Ian Nuhn

Title: AMPHIBIOUS PUMPING VEHICLE

Assignment: 1

Reel/Frame: 037745 / 0185 **Received:** 02/16/2016 **Recorded:** 02/16/2016 **Mailed:** 02/17/2016 **Pages:** 2

Conveyance: ASSIGNMENT OF ASSIGNORS INTEREST (SEE DOCUMENT FOR DETAILS).

Assignor: NUHN, IAN **Exec Dt:** 10/23/2013

Assignee: NUHN INDUSTRIES LTD.
P.O. BOX 160
SEBRINGVILLE, CANADA N0K1X0

Correspondent: BRUNET & CO. LTD.
401 BAY ST.
SUITE 1600
TORONTO, M5H 2Y4 CANADA

Search Results as of: 01/19/2022 10:40 AM

If you have any comments or questions concerning the data displayed, contact PRD / Assignments at 571-272-3350. v.2.6
Web interface last modified: Jun 26, 2017 v.2.6

Disclaimer:
Assignment information on the assignment database reflects assignment documents that have been actually recorded.
If the assignment for a patent was not recorded, the name of the assignee on the patent application publication or patent may be different.
If you have any comments or questions concerning the data displayed, contact OPR / Assignments at 571-272-3350

Close Window

WORLD-WIDE ASSIGNMENT

In consideration of One Dollar and other good and valuable consideration, the receipt whereof is hereby acknowledged, I,

Ian Nuhn, citizen of Canada, P.O. Box 160, Sebringville, Ontario, N0K 1X0,

do hereby sell, assign and transfer to **Nuhn Industries Ltd.**, a Corporation duly incorporated under the laws of Canada in the Province of Ontario, having its principal place of business at P.O. Box 160, Sebringville, Ontario, N0K 1X0, its successors and assigns, all my rights, title and interest in and to my invention entitled

"AMPHIBIOUS PUMPING VEHICLE"

in Canada, the United States of America and in and for all other countries of the world, for which an application was filed in the United States of America on **August 19, 2013**, under application serial no. **61/867,598**, and any nationalizations, improvements, additions or amendments thereon included in corresponding applications filed in any country.

I further undertake to execute without further consideration all lawful papers, all divisional, continuing and reissue applications, make all rightful oaths, and generally do everything possible to assist and enable the said Nuhn Industries Ltd., its successors, assigns, agents and nominees, to obtain and enforce proper patent protection for the said invention.

This indenture shall be binding upon and enure to the benefit of the heirs, executors, administrators, successors and assigns, respectively, of the parties hereto.

In witness whereof I have hereunto set my hand and seal at Sebringville, Ontario, Canada, this 23 day of OCTOBER, 2013.

Ian Nuhn

BEFORE ME this 23 day of October, 2013, personally appeared Ian Nuhn, who acknowledged to me that ~~she~~ he signed the above Assignment of ~~her~~ his own free will and for the purposes therein set forth.

Witness
Name: Kristy Roberts.

ACKNOWLEDGED AND ACCEPTED at Sebringville, Ontario, Canada, this 23 day of October, 2013, by Nuhn Industries Ltd.

Dennis Nuhn, President
I have authority to bind Nuhn Industries Ltd.