May 21, 1968 D. E. REMLEY 3,384,047

WATER SPORT GAME APPARATUS

Filed July 10, 1967

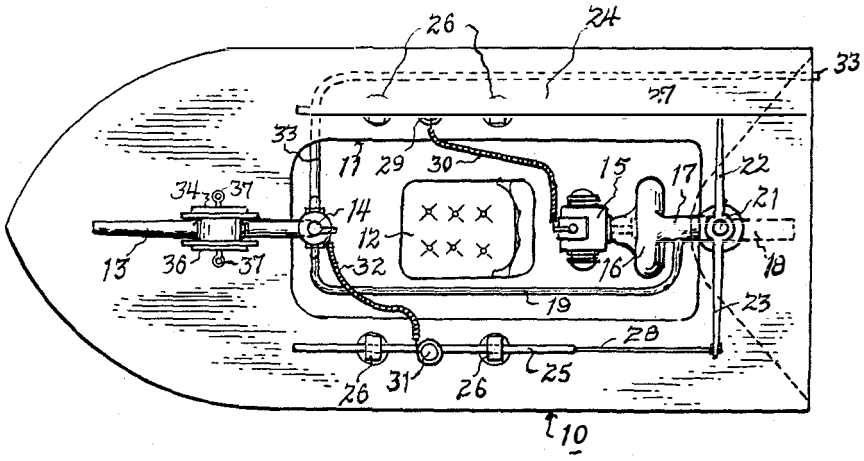

Fig. 1

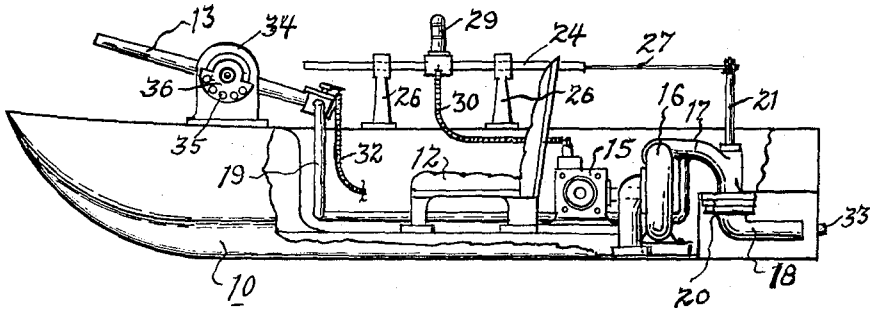

Fig. 2

INVENTOR.
DONALD E. REMLEY.
BY
ATTORNEY

United States Patent Office

3,384,047

Patented May 21, 1968

1

3,384,047

WATER SPORT GAME APPARATUS

Donald E. Remley, 1138-A Howe Ave., Sacramento, Calif. 95825

Filed July 10, 1967, Ser. No. 652,153
3 Claims. (Cl. 115—12)

ABSTRACT OF THE DISCLOSURE

This invention is primarily concerned with apparatus for engaging in an aquatic sport or game which I prefer to call Hydro-Fighting, in which a boat or other buoyant body is equipped with hydro or other form of propulsion means having a gun at its bow by which a jet of water under the control of a player in the boat may be projected upon an adversary and with manually operating means in the form of push rods connected to a tiller post with hand grip members carried thereupon by which the maneuvering and speed of the boat and the water gun may be controlled in a simultaneous manner.

My present invention relates to an aquatic sports game, such as hydro-fighting involving water guns for projecting jets of water on an adversary, and more particularly the buoyant members or boats with water guns and propulsion means with controls by which the maneuvering and speed of the boat and the operation of the water guns may be controlled during the course of a game.

The principal object of my invention is to provide apparatus for a novel water sports game which will be simple in operation and safe in use to both the occupant and any person in the water therearound.

Another object of the invention is to provide a hydro-jet propelled buoyant body or boat having combined steering and propulsion control means and a novel type of water jet projecting gun with control by which the speed and direction of the boat and operation of the water gun will at all times be under the control of the occupant of the boat.

Other objects and advantages will be in part evident to those skilled in the art and in part pointed out hereinafter in connection with the accompanying drawing, wherein there is shown by way of illustration and not of limitation a preferred embodiment of the invention.

In the drawing wherein like numerals refer to like parts throughout the several views:

FIGURE 1 is a top view of a boat with the water gun mounted at its forward deck with the jet propulsion and steering means as controlled from the cockpit of the boat.

FIGURE 2 is a side view of the boat shown in FIGURE 1 with a portion of the hull broken away to reveal the seating and interior arrangement of the parts.

For a full understanding and appreciation of my invention it should be stated that the primary object is to provide apparatus for a water sport involving the direct competition between two players and their boats, called Hydro-Fighters. These boats will be similar in design and size and will be equipped with a water gun. The competition will be held in an enclosed area of water and the competitors will endeavor to score points by hitting the opponent with his water gun.

2

In order to insure that the competition will center upon skill and tactics of the drivers, certain restrictions are placed on the construction of the boat and in particular on the power of the propulsion means. Because rapid high speed maneuvers are required in this type of sport, I prefer hydro-jet propulsion as this will eliminate the potential danger of having a spilled driver being overrun by the other boat and injured by a propeller or the like.

The Hydro-Fighting game will be limited to a small area of water. It is therefore feasible that Hydro-Fighting stadiums can be built that would satisfy the requirements, thus bringing exciting water sports competition to areas that have heretofore had no water sports. The boats will be small, low-powered and inexpensive in construction and will provide exciting water sports competition for people who are unable to take part in existing competitive events because of the lack of necessary funds and equipment.

Reference is now made to the accompanying drawing wherein the numeral **10** designates in the main a buoyant member in the form of a boat having an open cockpit **11** with an occupant accommodating seat **12** disposed substantially centrally therein. Forward of the cockpit **11** and mounted upon the deck of the boat **10** there is a water jet directing gun **13** having an "on" and "off" valve **14** by which the firing of the gun is controlled as will be described in more detail hereinafter. At the rear of boat **10** and located in the cockpit **11** of the boat there is a low horsepower gasoline engine **15** shown as direct-connected to a centrifugal pump **16**. The pump **16** has an intake at the bottom of the boat and an exhaust conduit **17** with a rearwardly extending nozzle **18** through which a jet of water is discharged as the boat propelling means. A pipe conection **19** is also provided for conducting water under pressure from the pump **16** and through the valve **14** to the gun **13** when firing.

The nozzle **18**, as is more clearly shown in FIGURE 2 of the drawing has a swivel type mounting **20** by which the direction of a jet producing nozzle **18** may be turned to provide for a steering of the boat. To control the nozzle **18** with its swivel mounting **20** there is an upstanding tiller **21** having oppositely extending arms **22** and **23**. The arms **22** and **23** of the tiller rod **21** are connected respectively to longitudinally slidable rods **24** and **25** that are mounted upon supports **26** extending upwardly from the deck and support the slidable rods **24** and **25** for movement along opposite sides of the cockpit **11**. These rods **24** and **25** are connected to the tiller arms **22** and **23** by cables **27** and **28** in such a manner that when these rods are moved alternately forwardly and rearwardly the position of the nozzle **18** will be changed to effect a steering of the boat. The longitudinally extending rod **24** is here shown as having an upstanding vertical hand grip **29** that has a flexible cable connection **30** with the gasoline engine **15** and the longitudinally extending rod **25** is shown as having a similar upstanding extending hand grip **31** which operates through a flexible cable connection **32** to control the flow of water through the valve **14** and to the water jet gun **13**. Leading from the valve **14** there is a by-pass or discharge connection **33** through which the water flowing to the valve **14** through the pipe **19** will be exhausted when the valve **14** is closed to the

gun. In this manner a constant flow of water is provided at the gun controlling valve **14** in such a manner that water will be available at all times when the pump **16** is in operation.

While I have shown the propulsion means as embodying a gasoline engine-driven centrifugal pump as a propulsion jet means, it will be understood that the boat may be operated with different forms of pump or propulsion means. In the event that the hydro-jet is not employed as a boat propelling means it will be understood that an independent source of water under pressure will be provided for the operation of the water gun **13**.

A feature of the water gun **13** is that it is mounted upon a trunnion-like support **34** at the forward deck of boat **10** in such a manner that it will point straight ahead with only an adjustment for elevation. Associated with the gun there is an arcuate plate **35** having radially spaced holes **36** through which a pin or pins **37** are projected. In this manner the maneuvering of the boat **10** in making hits upon an opponent is rendered the important activity of the game. In other words, in playing the game, the players will rely mainly upon their skill in maneuvering the boats to bring the water gun **13** into a firing position. The only variable being that the gun can be elevated to determine the range at which the engagement between the boats will take place.

While I have, for the sake of clearness and in order to disclose my invention so that the same can be readily understood, described and illustrated a specific form and arrangement, I desire to have it understood that this invention is not limited to the specific form disclosed, but may be embodied in other ways that will suggest themselves to persons skilled in the art. It is believed that this invention is new and all such changes as come within the scope of the appended claims are to be considered as part of this invention.

Having thus described my invention, what I claim and desire to secure by Letters Patent is:

1. A water sport game apparatus, comprising a buoyant boat-like member having a cockpit with accommodations for a game player, a variable speed motor-driven propulsion means, tiller means for controlling the movements of said boat-like member when under propulsion, a jet projecting water gun mounted upon the deck of said boat-like member forward of said cockpit, a first longitudinally movable means extending along one side of said cockpit connected with said tiller means, a motor speed controlling grip carried by said first longitudinally movable means, a second longitudinally movable means extending along the other side of said cockpit and connected with said tiller means, said first and second longitudinally movable means being adapted and arranged by their joint action to control the steering of said boat-like member, and a water gun valve controlling grip carried by said second longitudinally movable means, whereby a player in the cockpit of said boat can maneuver the boat, control its speed and the operation of said water gun without releasing a hold on the control grips carried by said first and second longitudinally movable means.

2. The invention as set forth in claim **1**, characterized by the fact that the motor-driven propulsion means carried by the buoyant boat-like member consists of a hydro-jet with means by which the direction of the jet may be changed to affect a steering of the boat-like member.

3. The invention as set forth in claim **1**, characterized by the fact that the jet projecting water gun is fixed on the deck of the boat-like member in alignment with the axis of the boat with means for securing it at different elevations of trajectory.

References Cited

UNITED STATES PATENTS

2,991,744	7/1961	Ensley et al.	115—12 X
3,339,516	9/1967	Lenci	115—12

MILTON BUCHLER, *Primary Examiner.*

TRYGVE M. BLIX, *Examiner.*