US008944758B2

(12) **United States Patent**
Nuhn

(10) **Patent No.: US 8,944,758 B2**
(45) **Date of Patent: Feb. 3, 2015**

(54) **PUMP FOR IMMERSION WITHIN A FLUID RESERVOIR**

(76) Inventor: **Ian Nuhn**, Sebringville (CA)

(*) Notice: Subject to any disclaimer, the term of this patent is extended or adjusted under 35 U.S.C. 154(b) by 621 days.

(21) Appl. No.: **13/038,189**

(22) Filed: **Mar. 1, 2011**

(65) **Prior Publication Data**

US 2012/0224982 A1 Sep. 6, 2012

(51) **Int. Cl.**
F04D 13/08 (2006.01)
F04D 29/60 (2006.01)

(52) **U.S. Cl.**
CPC ***F04D 29/607*** (2013.01); ***F04D 13/08*** (2013.01)
USPC **415/206**

(58) **Field of Classification Search**
USPC 415/126, 206
See application file for complete search history.

(56) **References Cited**

U.S. PATENT DOCUMENTS

2,890,659 A	*	6/1959	Haentjens et al.	415/126
3,557,981 A		1/1971	Seymour	
3,610,416 A	*	10/1971	Otto	210/121
3,824,042 A	*	7/1974	Barnes et al.	417/423.3
3,948,450 A		4/1976	Erlitz	
4,406,413 A		9/1983	Houle	
4,555,063 A		11/1985	Goettsch	
4,594,006 A	*	6/1986	Depeault	366/266
4,830,585 A		5/1989	Ruyle	
4,971,526 A		11/1990	Ruyle	
5,100,303 A		3/1992	Depault	
5,624,241 A		4/1997	Nesseth	

FOREIGN PATENT DOCUMENTS

EP 1782882 A1 5/2007

OTHER PUBLICATIONS

Power-take-off pumps. Huning Brand Gulletechnik. http://www.brnad-melle.de/31-1-Power-take-off+pumps.html.

* cited by examiner

Primary Examiner — Nathaniel Wiehe
Assistant Examiner — Kayla McCaffrey
(74) *Attorney, Agent, or Firm* — Brunet & Co. Ltd.; Robert A. H. Brunet; Hans Koenig

(57) **ABSTRACT**

A pump for immersion in a fluid reservoir has an extensible body, fluid conduit and drive in order that a length of the pump may be varied in order to accommodate a variety of reservoir fluid heights. In addition, the pump may be pivotable relative to at least a portion of a frame in order that the entrance angle may be adjusted. The pump has a bottom housing with a bottom inlet and at least two tangential fluid outlets that are upwardly angled towards the conduit. A combiner is provided to merge the outlets with the fluid conduit. An impeller within the housing is shaped to transfer fluid tangentially and upwardly within the housing to co-operate with the upward angle of the outlets. These features reduce fluid pressure loss and thereby increase fluid flow rate through the pump for a given input power.

31 Claims, 12 Drawing Sheets

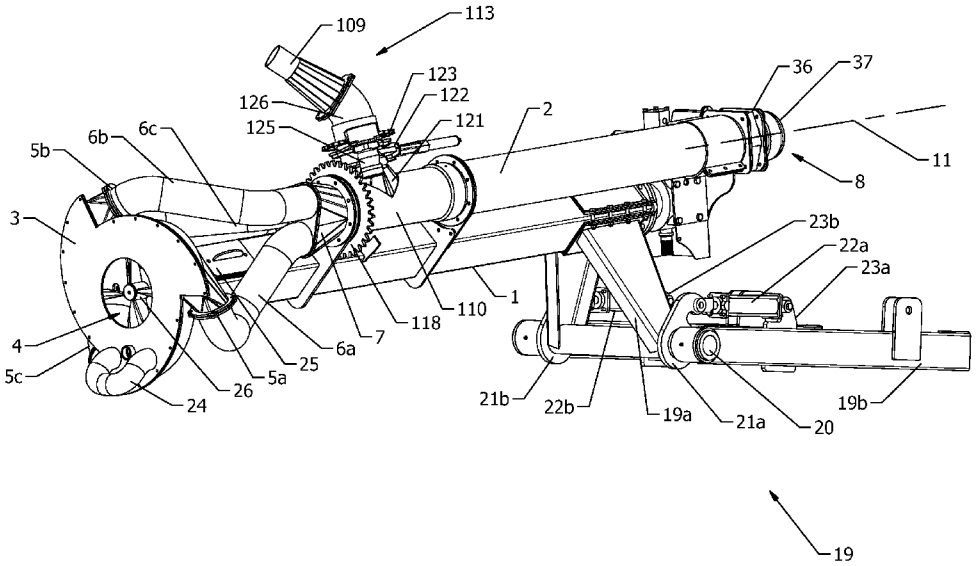

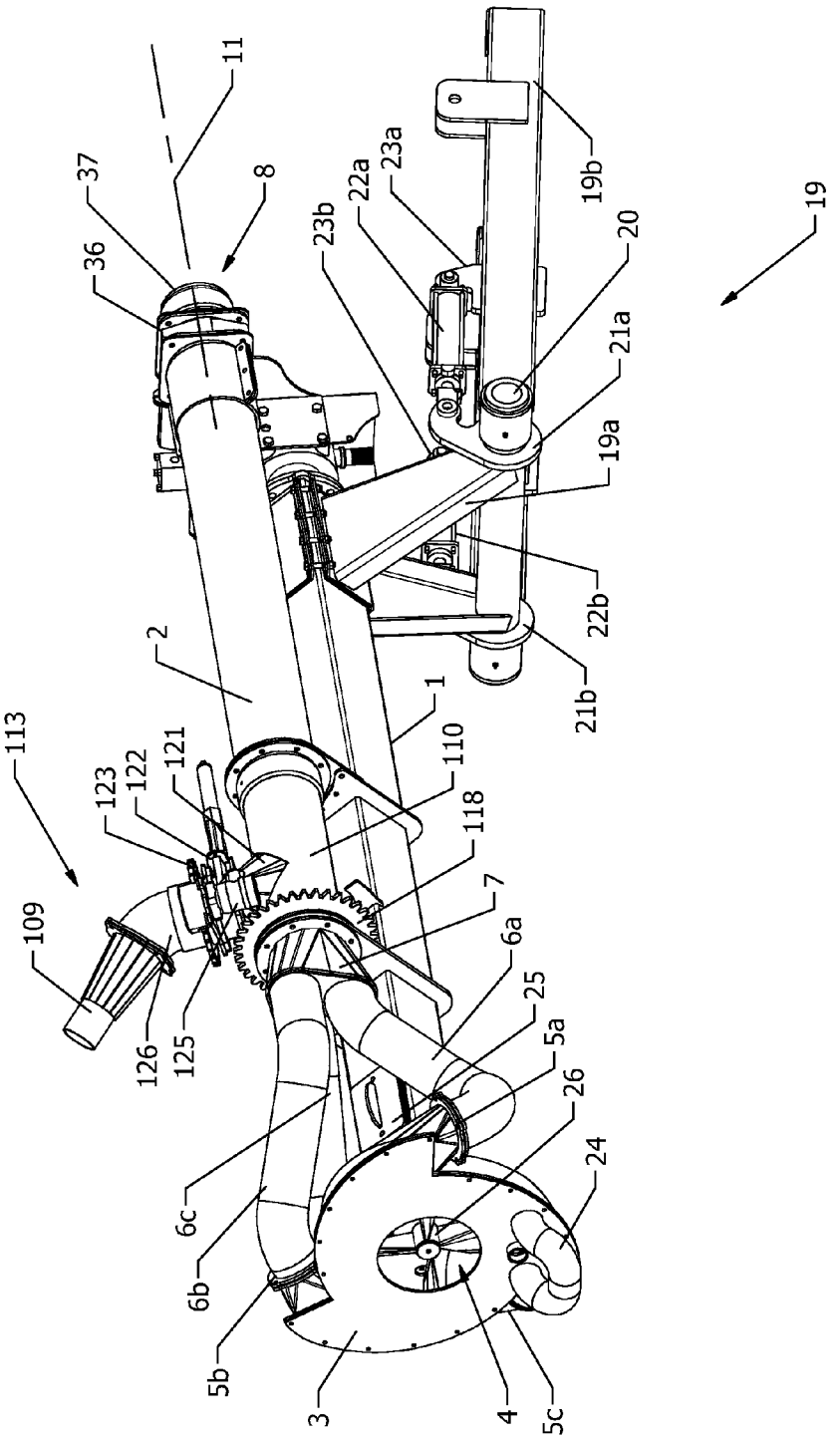
11
37
8
36
23b
22a
23a
19b
20
19
21a
19a
22b
21b
2
1
110
118
7
6a
25
5a
26
24
5c
4
3
5b
6b
6c
113
123
122
121
109
126
125

FIG. 1

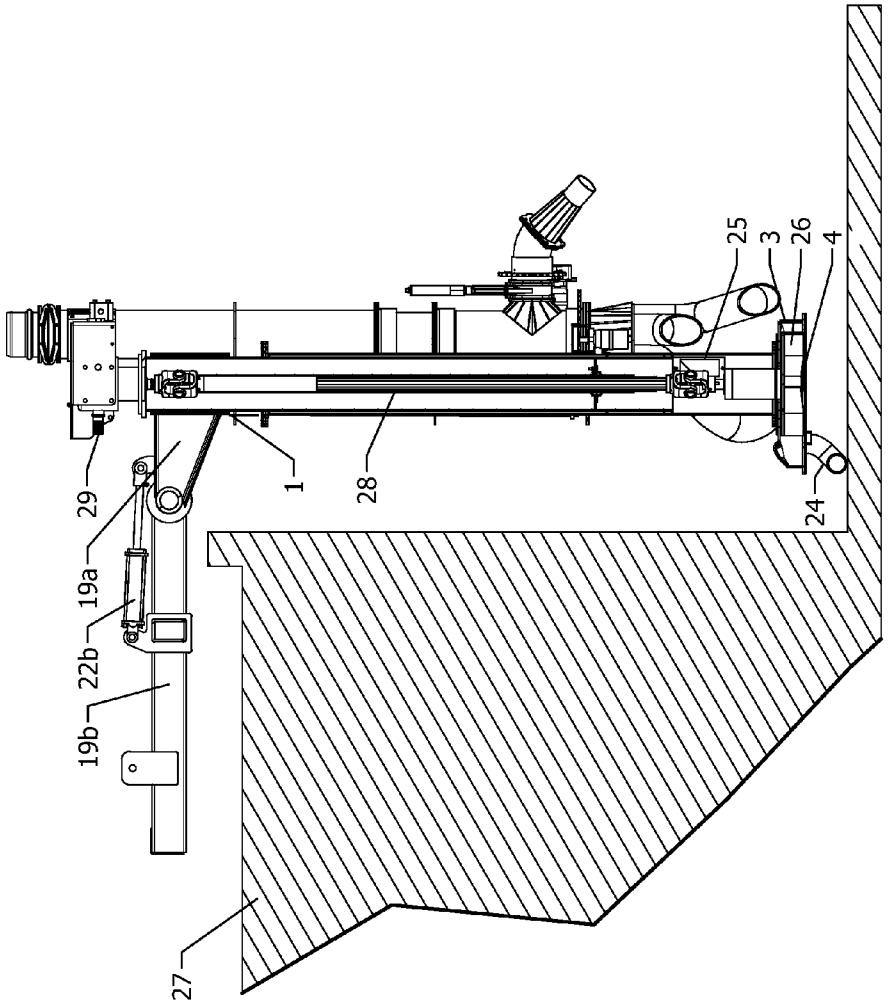

FIG. 2

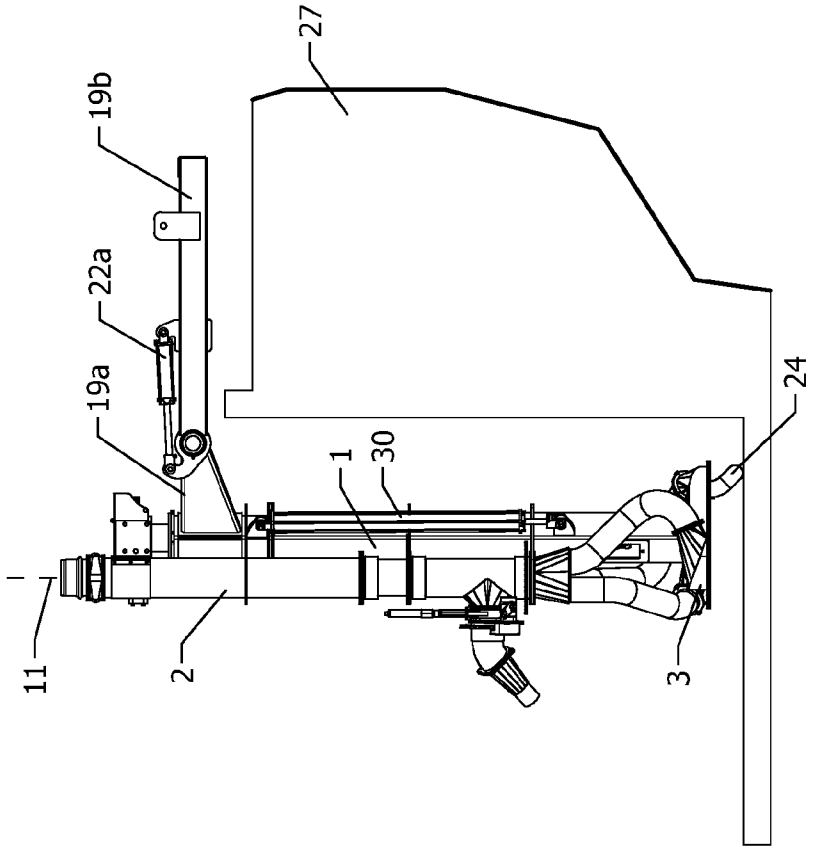

FIG. 3a

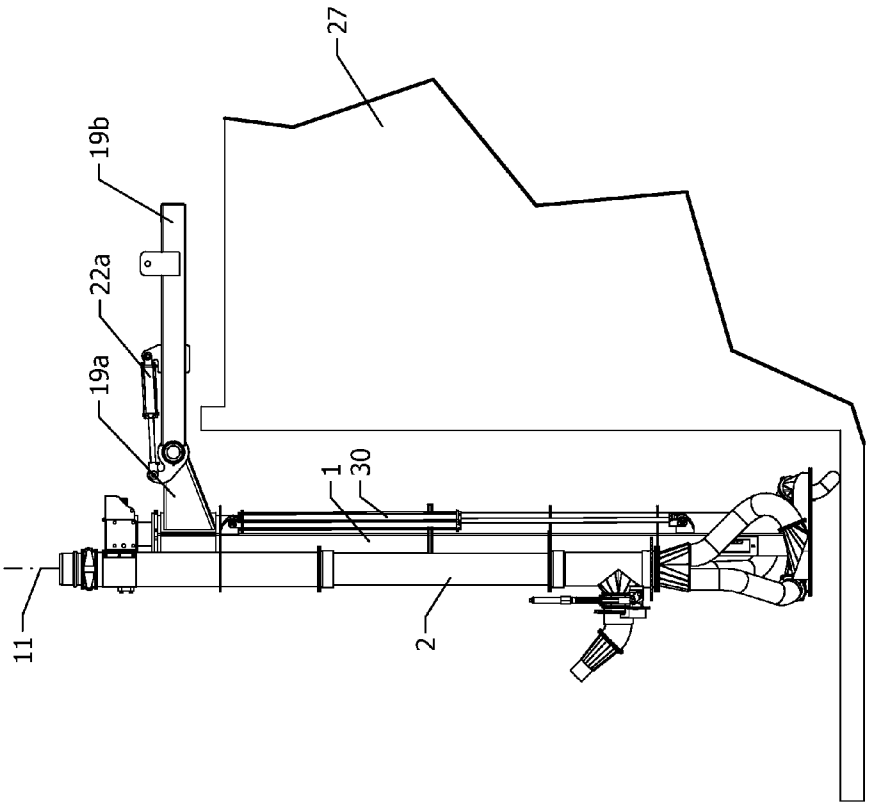

FIG. 3b

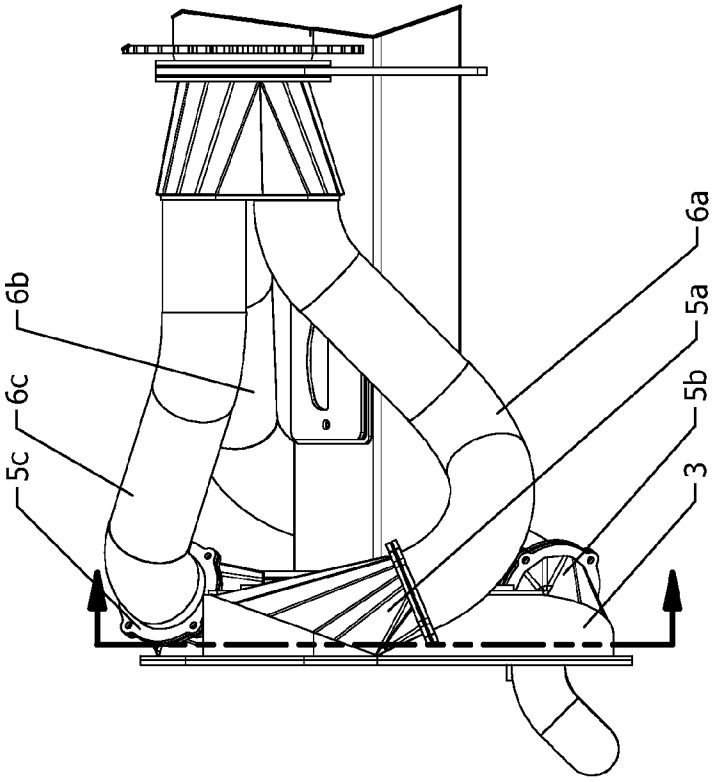

FIG. 4a

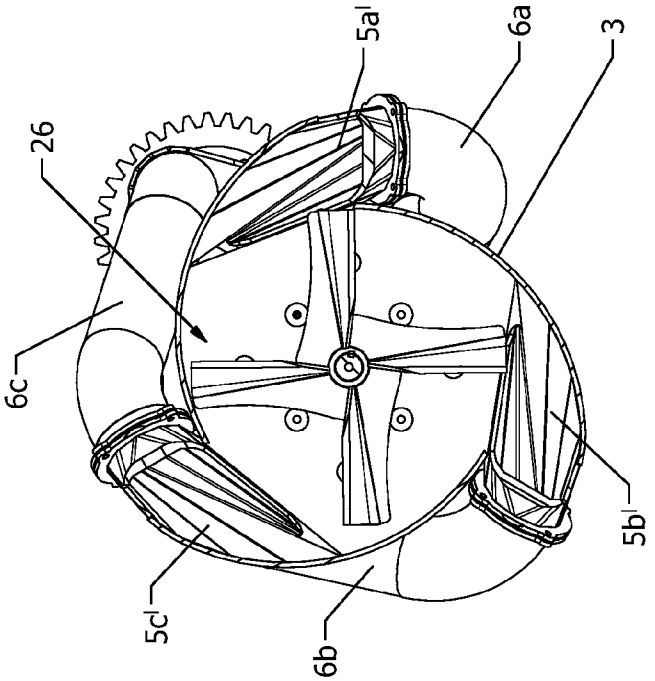

FIG. 4b

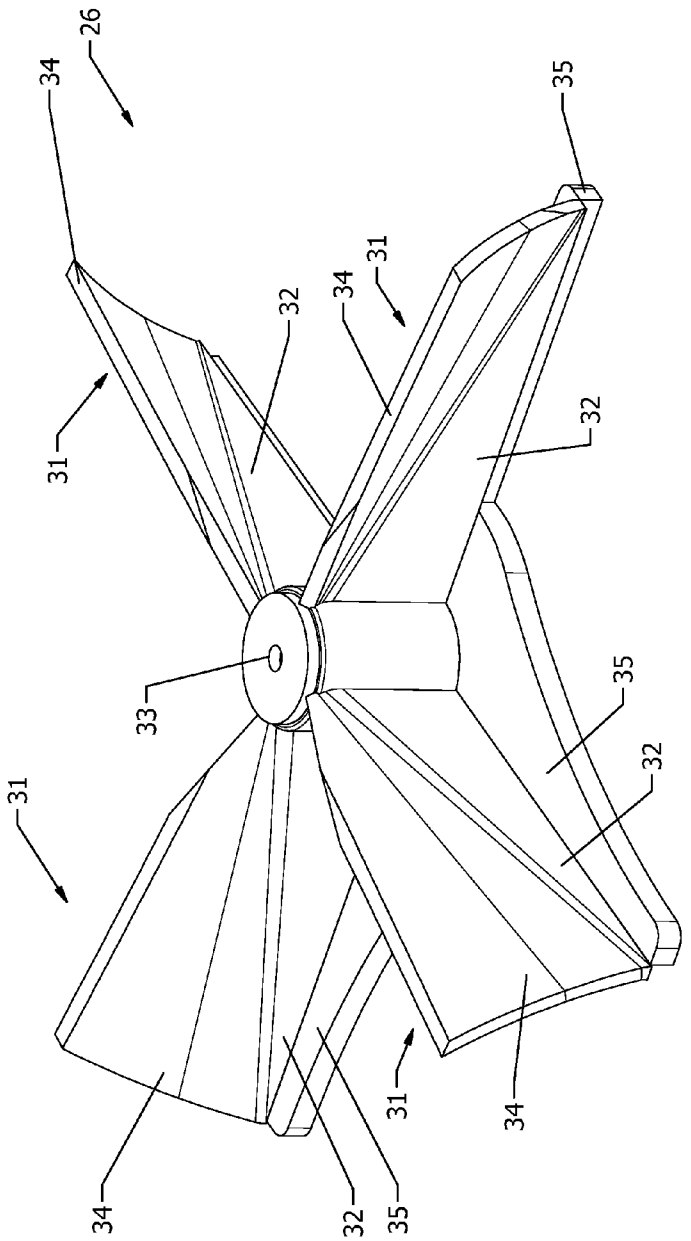

FIG. 5

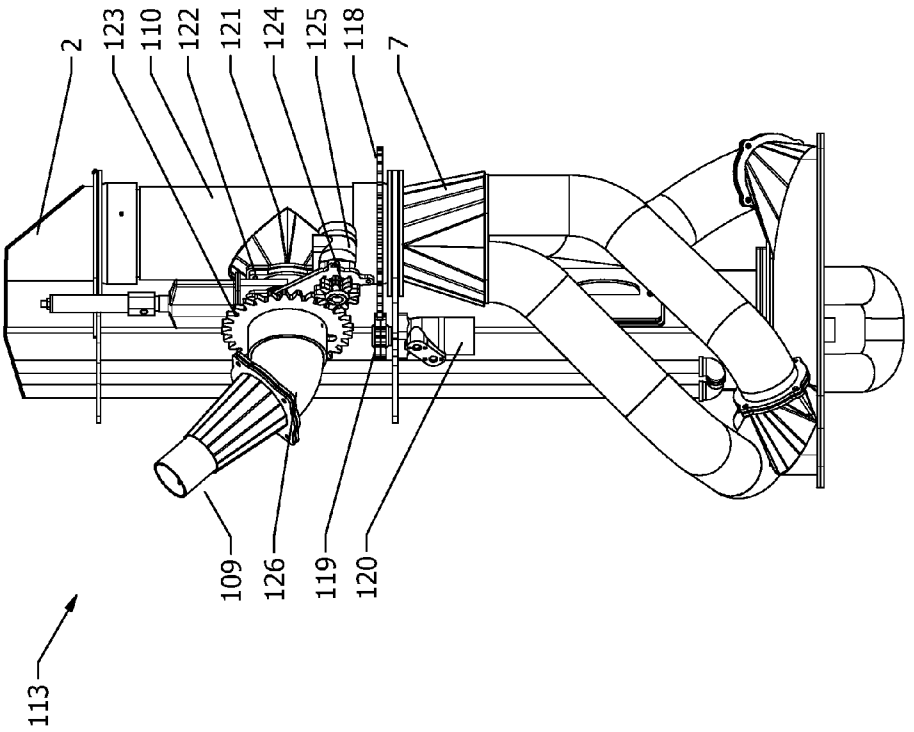

FIG. 6

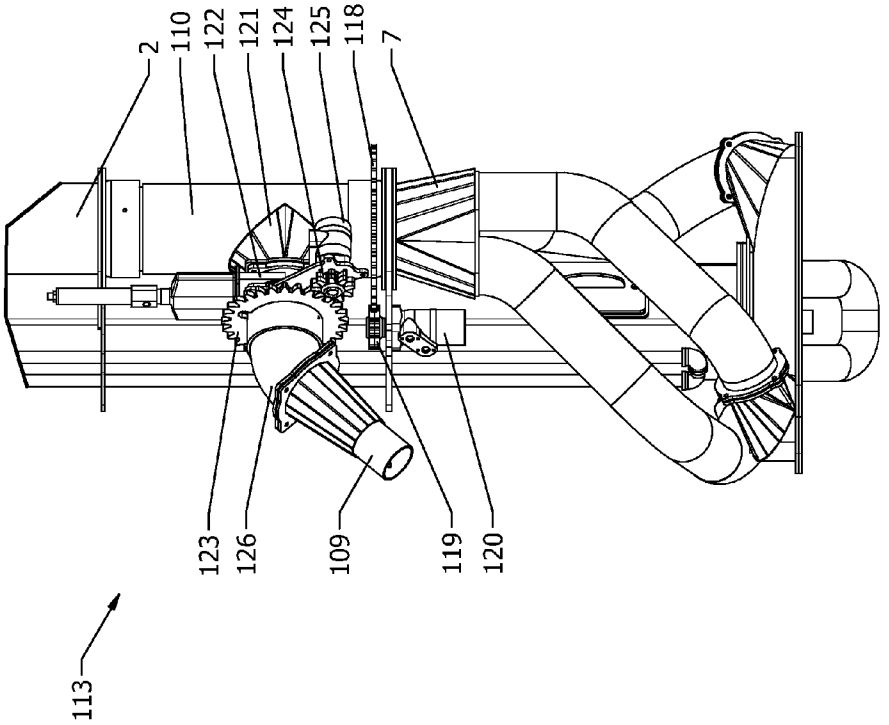

FIG. 7

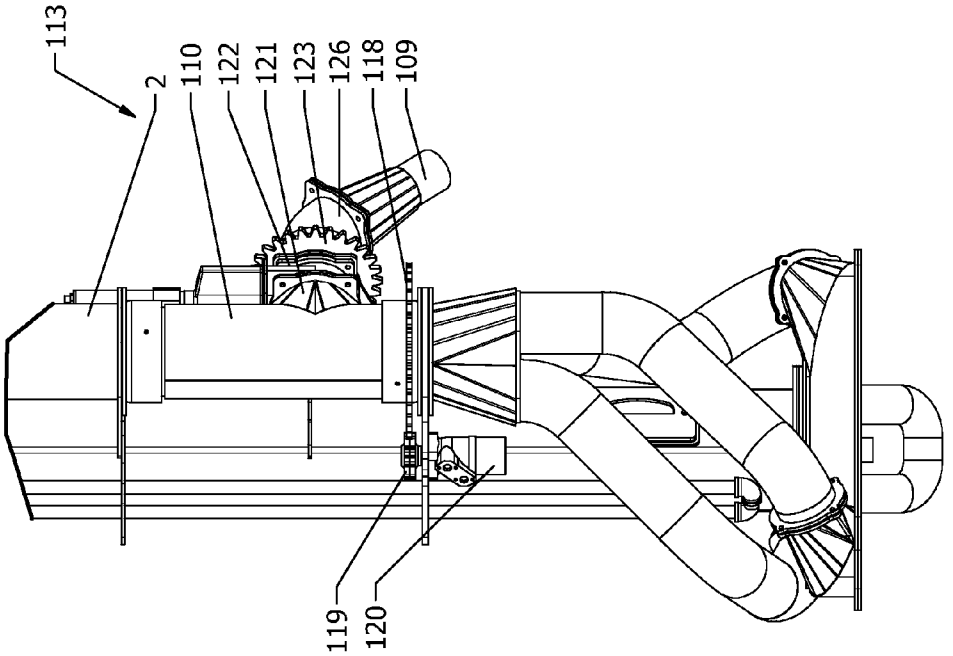

FIG. 8

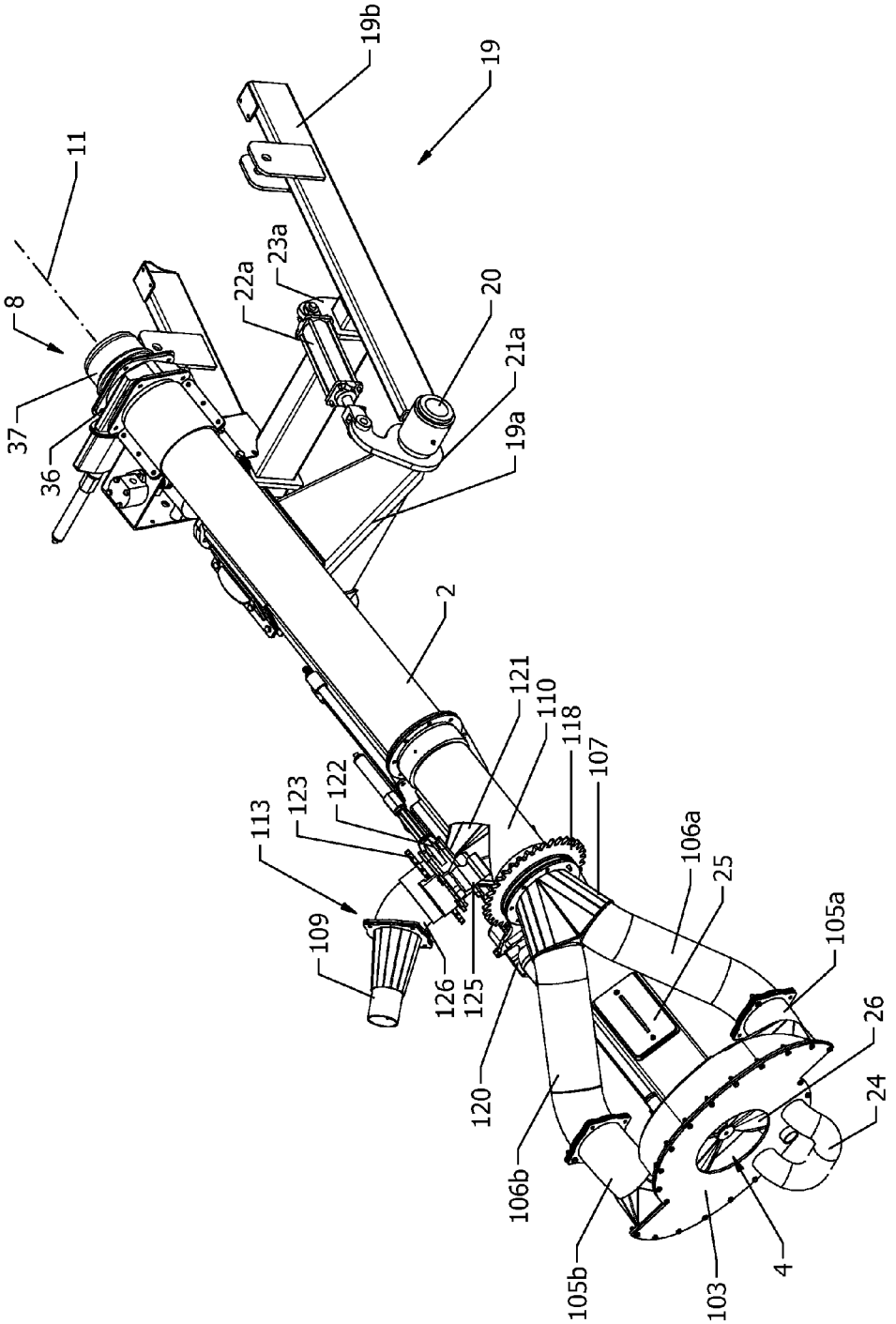
19b
19
11
8
37
36
22a
23a
20
21a
19a
2
121
110
118
107
113
123
122
109
126
125
120
106a
25
105a
26
24
106b
105b
103
4

FIG. 9

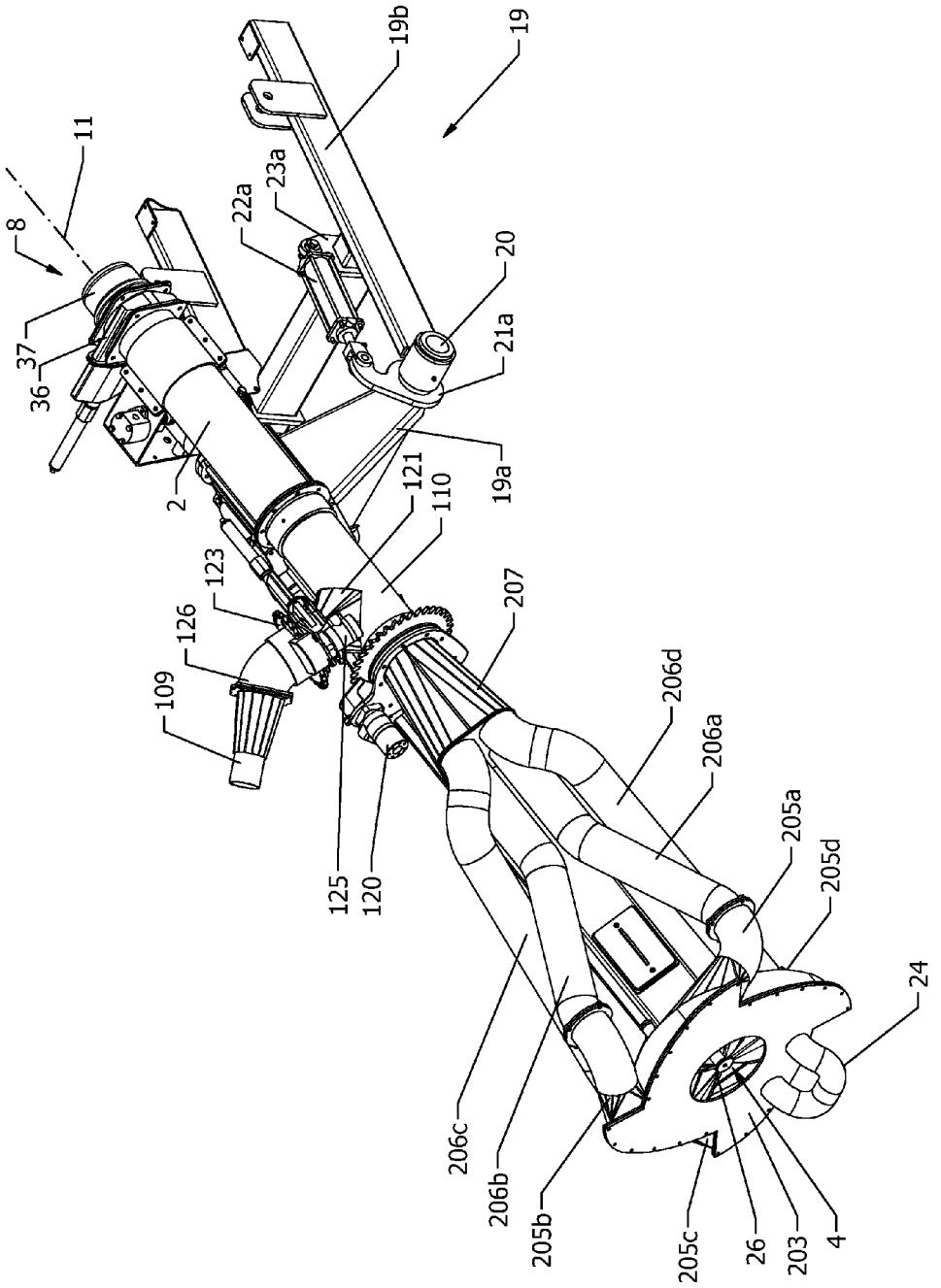
19b
19
11
23a
22a
8
20
37
21a
36
19a
2
121
110
123
207
126
109
206d
206a
205a
125
120
205d
24
206c
206b
205b
205c
26
203
4

FIG. 10

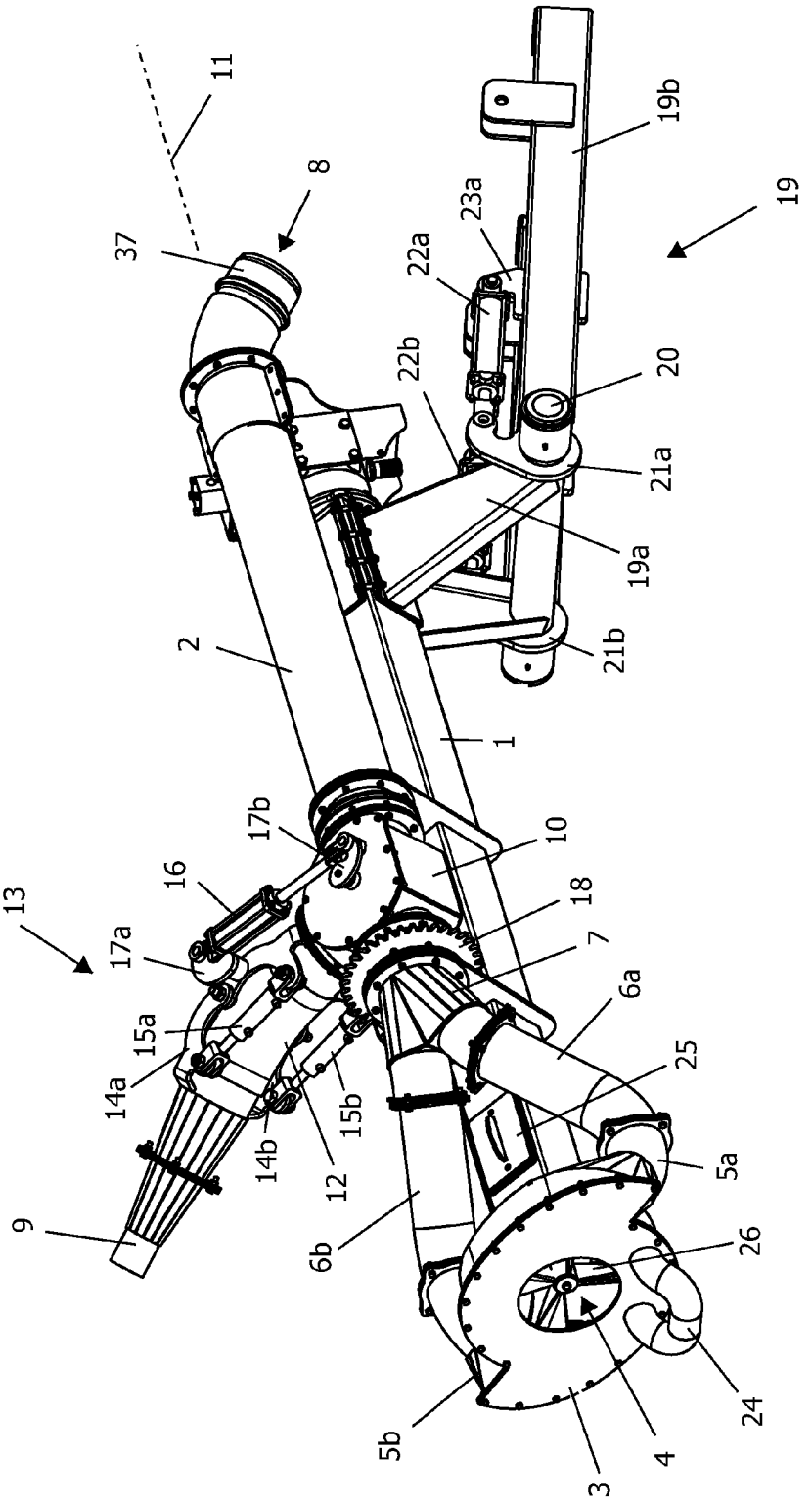
11
8
37
19b
19
23a
22a
22b
20
21a
19a
21b
2
1
17b
10
16
18
13
17a
7
6a
15a
25
14a
15b
14b
12
5a
9
6b
26
24
5b
4
3

FIG. 11

PUMP FOR IMMERSION WITHIN A FLUID RESERVOIR

FIELD OF THE INVENTION

The invention relates to pumps, particularly pumps that are positionable alongside a fluid reservoir for immersion within the reservoir. In particular, the invention relates to agricultural pumps for the pumping of liquid manure from liquid manure reservoirs.

BACKGROUND

Liquid manure from animal husbandry operations, particularly pig farming operations, is typically stored in a large manure reservoir or lagoon until there is a sufficient quantity available to spread or irrigate onto farm land for disposal. In order to remove the manure from the reservoir, a pump is used that is typically located alongside the reservoir and lowered into the reservoir. The pump can be free standing or attached to a tractor, which is often preferable to provide stability to the pump and a source of motive power for the pump.

The volumetric flow rate of fluid handled by the pump is large, typically in excess of 4000 gal/min; accordingly, it is desirable that the pump be efficient in terms of providing the required flow with minimal energy loss. Efficient pumps permit use of smaller tractors for providing motive power and reduce the fuel consumption of the tractor, reducing pump operating cost. In addition, it is desirable that the pump have large fluid openings and generous tolerances in order that solid material in the reservoir can be accommodated by the pump without plugging; this works against pump efficiency and makes it extra important to capitalize on efficiency gains wherever else they might be available.

Since the surface of the reservoir is variable in height relative to the side, due to either variation in the degree to which the reservoir is filled or due to removal of manure from the reservoir by pumping, it is desirable to have a pump with a variable depth position and optionally orientation relative to the surface. This is commonly accomplished by lowering the entire pump towards the surface, which often requires the tractor to be positioned dangerously close to the edge of the reservoir and is not suitable for all situations, particularly lagoons with gradually sloped sides or reservoirs with elevated sides.

In addition, it is desirable to have some means of surface agitation, either separate from the pump or incorporated into the pump itself, to disrupt formation of a cake or blanket on the surface of the reservoir and/or to prevent foam formation during pumping. The means of agitation often comprises a nozzle for re-directing a portion of the pumped fluid back to the surface of the reservoir; however, these nozzles are typically fixed and lack the ability to be positioned to break up cakes and foam.

Accordingly, there still exists a need for improved pumps, particularly pumps that are positionable alongside a fluid reservoir for immersion within the reservoir.

SUMMARY OF THE INVENTION

According to an aspect of the invention, there is provided a pump for immersion within a fluid reservoir comprising: a pump body comprising an elongated fluid conduit; a housing located at a bottom end of the pump body, the housing comprising a fluid inlet and at least two upwardly oriented tangential fluid outlets located on opposite sides of the body; a combiner for creating a fluid connection between the outlets

and the fluid conduit; an impeller located within the housing having vanes shaped to direct the fluid tangentially within the housing.

The pump desirably further comprises a frame that may be adapted for mounting to a farm vehicle, particularly a tractor. The frame may comprise means for mounting to a three point hitch connection of a tractor, a type of connection that is well known in agriculture and permits a frame to be raised or lowered relative to the tractor. The pump body may be pivotable about at least a portion of the frame from a substantially horizontal transport position to a non-horizontal (e.g. vertical) working position. The pump may further comprise a frame adjustment means for adjusting an angular relationship between the pump body and horizontal. This allows the pump to be presented to the reservoir surface with a variety of angular orientations.

The pump body and fluid conduit may be extensible along a longitudinal axis of the pump in order to vary a length of the pump. This permits further flexibility in terms of pump position relative to the reservoir surface and allows the pump housing to be extended downwardly towards the surface as the reservoir is emptied. The pump may comprise a drive means for delivering motive power from a motive power source (such as an engine located, for example, on the tractor), to the impeller of the pump. The drive means may be adapted for adjustment with the pump body along the longitudinal axis. The drive means may comprise a hydraulic fluid conduit for providing hydraulic fluid power to a hydraulic motor connected to the impeller or, preferably, a Power Take-Off (PTO) shaft that is extensible with the pump body and fluid conduit. The pump body, fluid conduit, and drive means may comprise telescoping connections to permit variation in length.

The housing desirably improves efficiency of the pump by directing the fluid not just tangentially of the housing, but also upwardly. This eliminates the need for elbows to direct the fluid upwardly, which lead to pressure drop and efficiency loss. The outlets desirably direct the fluid upwardly from the housing at an angle of from 20 to 70 degrees relative to a plane of rotation of the impeller, more desirably at an angle of from 30 to 60 degrees, yet more desirably at an angle of from 40 to 50 degrees. The at least two outlets may comprise at least three outlets or at least four outlets. The at least two outlets may comprise, two outlets, three outlets or four outlets. The outlets may be evenly spaced about the circumference of the housing.

In order to impart the desired direction to the fluid as it leaves the housing and to reduce the amount of energy robbing directional change required, it is desirable that the vanes of the impeller are configured to direct the fluid both tangentially and upwardly, relative to the plane of rotation of the impeller, within the housing. This can be accomplished by providing the vanes with a curved side profile, such that rotation of the impeller causes the fluid to follow the curvature of the vane and directs the fluid tangentially to the direction of rotation and upwardly along the vane. This desirably causes the fluid to exit through the outlets in a direction substantially parallel to the outlets, reducing the need for directional change to be imparted to the fluid by the housing and thereby increasing the efficiency of the pump. In addition, use of multiple outlets reduces the pressure drop experienced by the fluid as it exits the pump, further improving pump efficiency and reducing the likelihood of blockage of the outlet due to any solid debris that may be present in the fluid being pumped.

The pump is desirably equipped with a bottom inlet located substantially in the center of the impeller. Although multiple

inlet openings may be used, it is desirable that a singled inlet opening is used with a large enough diameter to permit debris to pass through the pump without plugging the inlet. The inlet diameter is desirably at least one third of the diameter of the pump housing, more desirably at least half of the diameter of the pump housing. By locating the inlet in the bottom of the housing, a relative shallower amount of fluid is required for pumping, permitting more complete drainage of the reservoir being pumped.

The combiner desirably directs fluid from the outlets upwardly along the body and towards a bottom end of the fluid conduit. The combiner desirably uses gradual bends to reduce the likelihood of pressure loss of the fluid, thereby improving overall pump efficiency. The combiner is desirably located between the housing and the bottom end of the fluid conduit, but can also be located elsewhere, for example near a top of the pump. In this case, it is desirable that flexible fluid conduits are employed in order to accommodate length variation of the pump body.

The pump may further comprise an agitator nozzle for directing a portion of the fluid passing through the pump outwardly from the pump and back towards a surface of the fluid reservoir. This desirably permits disruption of cake, blanket or foam formation on the surface of the reservoir. The agitator nozzle is desirably in fluid communication with the fluid conduit. The agitator nozzle may be connected to the fluid conduit by a rotatable nozzle body that permits rotation of the nozzle about the longitudinal axis. The pump may further comprise a nozzle orientation means for adjusting an angular relationship between the longitudinal axis and the nozzle. The nozzle orientation means may be mounted to the rotatable nozzle body. By permitting rotation and angular adjustment relative to the longitudinal axis, fluid exiting the nozzle can be directed towards any desired location on the surface of the reservoir, simplifying the task of disrupting cakes, blankets or foam on the surface. A flexible connection may be provided between the nozzle and the rotatable nozzle body.

According to another aspect of the invention, there is provided a pump for immersion within a fluid reservoir, the pump comprising: a frame; a telescoping pump body connected to the frame, the body comprising a telescoping fluid conduit, the body and conduit extensible along a longitudinal axis; a frame adjustment means for pivoting the telescoping pump body from a substantially horizontal transport position to a non-horizontal working position; a housing located at a bottom of the pump body comprising a bottom fluid inlet and at least two upwardly oriented tangential fluid outlets located on opposite sides of the body; a combiner for creating a fluid connection between the outlets and the telescoping fluid conduit, the combiner directing fluid from the outlets upwardly along the body and towards a bottom end of the fluid conduit; an impeller located within the housing having vanes shaped to direct the fluid tangentially and upwardly within the housing; a drive means for providing power to the impeller, the drive means extensible with the telescoping pump body; an agitator nozzle for directing a portion of the fluid outwardly from the pump back to a surface of the fluid reservoir, the agitator nozzle rotatable about the longitudinal axis; and, a nozzle orientation means for adjusting an exit trajectory of the nozzle.

According to yet another aspect of the present invention, there is provided a pump comprising an elongated fluid conduit aligned with a longitudinal axis of the pump; a housing at a bottom of the conduit containing an impeller for directing fluid through the conduit; an agitator nozzle in fluid communication with the conduit; and, a nozzle orientation means for adjusting an exit trajectory of the nozzle.

Although described herein with reference to the pumping of liquid manure, the pump according to the present invention can be employed in any fluid pumping situation, particularly where reservoirs with variable height are encountered, such as when pumping fluid from rivers, ponds, lakes, rain water storage reservoirs, etc.

BRIEF DESCRIPTION OF THE DRAWINGS

Having summarized the invention, preferred embodiments thereof will now be described with reference to the accompanying figures, in which:

FIG. **1** shows a perspective view of a pump according to the invention in a transport position;

FIG. **2** shows a right side cut-away view of the pump of FIG. **1** in a working position;

FIG. **3***a* shows a left side cut-away view of the pump of FIG. **1** in a working position;

FIG. **3***b* shows a left side cut-away view of the pump of FIG. **1** in an extended working position;

FIG. **4***a* shows a side view of a pump housing according to the invention;

FIG. **4***b* shows a sectional view of the pump housing of FIG. **4***a;*

FIG. **5** shows an impeller of a pump according to the invention;

FIG. **6** shows an embodiment of a nozzle orientation means according to the invention in a first position;

FIG. **7** shows the nozzle orientation means of FIG. **6** in a second position;

FIG. **8** shows the nozzle orientation means of FIG. **6** in a third position;

FIG. **9** shows a perspective view of another embodiment of a pump according to the invention having two fluid outlets;

FIG. **10** shows a perspective view of yet another embodiment of a pump according to the invention having four fluid outlets; and,

FIG. **11** shows a perspective view of yet another embodiment of a pump according to the invention, having an alternative nozzle orientation means.

DETAILED DESCRIPTION

Referring to FIG. **1**, an embodiment of a pump according to the present invention is shown comprising a pump body **1** and an elongated fluid conduit **2** with a centrally located longitudinal axis **11**. A pump housing **3** is mounted to a bottom end of the pump body and comprises a fluid inlet **4** located on a bottom thereof and three upwardly oriented tangential fluid outlets **5***a*, **5***b*, **5***c* evenly spaced about the circumference of the housing **3** for directing fluid upwardly along the body **1**. The outlets **5***a*, **5***b*, **5***c* are connected to outlet conduits **6***a*, **6***b*, **6***c* that are in turn connected to a fluid combiner **7**. The combiner **7** directs the flow from the outlet conduits **6***a*, **6***b* into the elongated fluid conduit **2**, where it moves upwardly towards the conduit outlet **8**. A flow control valve **36**, comprising a hydraulically actuated gate valve, is flange mounted at the outlet **8**. Fluid exiting the outlet **8** can be delivered to rigid or flexible conduit, depending on what is best suited to the application, attached to the pump via outlet connector **37**.

Turning additionally to FIGS. **6** through **8**, the fluid conduit **2** comprises a nozzle body **110** that is connected to an agitator nozzle **109**, both of which are movable via a nozzle orientation means **113**. The nozzle body **110** comprises a section of the fluid conduit **2** that is rotatable about a longitudinal axis **11**

by way of engagement between a nozzle sun gear **118** and a nozzle moon gear **119** that is actuated by a hydraulic motor **120**. Suitable seals, such as O-rings, are provided to maintain a fluid seal between the combiner **7** and the upper portion of the fluid conduit **2**, despite the rotational movement of the nozzle body **110**. The nozzle body **110** comprises a T-shaped portion **121** to which a nozzle gate valve **122** is flange mounted. The nozzle gate valve **122** is hydraulically actuated and can be adjusted in order to provide a means for controlling the fluid flow rate through the nozzle **109**. A second sun gear **123** is engaged with a second moon gear **124** that is actuated by a second hydraulic motor **125**. Rotation of the motor **125** causes the nozzle **109** to rotate about an axis perpendicular to the longitudinal axis **11**. The nozzle **109** is equipped with a fixed 45° elbow **126**. By selecting a desired combination of rotation of the nozzle sun gear **118** and the second sun gear **123**, a wide range of fluid exit trajectories can be obtained from the nozzle **109**. A number of potential trajectories are illustrated with reference to FIGS. **6-8**. This allows a stream of the fluid being pumped to exit the pump and be re-directed back to the surface of the fluid reservoir in order to provide agitation and to break-up any solid clumps of debris or foam that may have accumulated at the surface.

Returning now to FIG. **1**, the pump further comprises a frame **19** that comprises a first portion **19***a* pivotally connected to a second portion **19***b* via a frame pivot shaft **20**. The first portion **19***a* is attached to the pump body **1**. A frame adjustment means is provided for adjusting an angular relationship of the pump body relative to horizontal. The frame adjustment means comprises a pair of frame dogs **21***a*, **21***b* that are attached to the first frame portion **19***a* proximal the pivot shaft **20**. The frame dogs **21***a*, **21***b* are interconnected with a pair of pivot cylinders **22***a*, **22***b* mounted to pivot lugs **23***a*, **23***b* of the second portion **19***b*. Actuation of the cylinders **22***a*, **22***b* causes the first portion **19***a* to rotate about the pivot shaft **20** relative to the second portion **19***b* in order to change the angular orientation of the pump body **1** from a substantially horizontal transport position, as shown in FIG. **1**, to a non-horizontal working position, for example a vertical working position as shown in FIGS. **2** and **3***a*, **3***b*. This allows the pump body to be positioned at any desired angle relative to the surface of the fluid reservoir, in order to accommodate a variety of reservoir edge conditions and surface heights.

In one embodiment, the frame **19** is adapted for connection to a farm tractor; however, in other embodiments, the frame may be adapted for connection to a truck or other vehicle. The frame **19** shown is adapted for connection to the farm tractor by a three-point hitch mechanism that is well known in the art; however, in other embodiments, the frame may be wheeled or otherwise mounted for independent connection to the farm tractor in order that it may be readily disconnected from the tractor and left in a desired location. Various means of connecting the pump to the farm tractor are known to persons skilled in the art.

The pump housing comprises a bottom rest **24** attached to a bottom thereof. The bottom rest is used to support the base of the pump against a bottom of the fluid reservoir and prevents damage to the housing when the pump is set down when not in use. The bottom rest **24** also provides a minimum spacing between the bottom of the fluid reservoir and the inlet **4**. An access door **25** is provided proximal the bottom of the pump body **1**. The access door is used to connect or disconnect a pump drive means (not shown in FIG. **1**) from a pump impeller **26** located within the housing **3**, in a manner that will be further described hereinafter.

Referring to FIG. **2**, the pump is shown in a substantially vertical working position. The frame cylinders **22***b* (**22***a* not shown) are extended such that the first portion **19***a* of the frame and the pump body **1** are pivoted downwardly relative to the second portion **19***b*. The bottom rest **24** is positioned against the bottom of the fluid reservoir **27**, ensuring that the housing **3** is not damaged and keeping a certain minimum spacing between the bottom of the reservoir **27** and the pump inlet **4** in the bottom of the housing. A cutaway portion of the body **1** shows a pump drive means comprising a rigid Power Take-Off (PTO) shaft **28** that is connected to the tractor via a PTO connector **29**. A flexible knuckle (not shown) behind the connector allows the rotation of the PTO connector **29** to be translated down the shaft **28** to the impeller **26**. The access door **25** is used to detach the shaft **28** from the impeller for maintenance purposes. The shaft **28** is of a telescoping type that permits its length to be adjusted with changes in length of the pump body **1**.

Referring to FIGS. **3***a* and **3***b*, in FIG. **3***a* the cutaway portion of the body **1** shows a hydraulic body cylinder **30** in a retracted position. The body cylinder **30** may be extended, as shown in FIG. **3***b*, along the longitudinal axis **11** to change the length of the pump body **1**, the fluid conduit **2** and the PTO shaft (**28**, not shown in FIGS. **3***a* and **3***b*), which are all telescopic. This allows the depth of the pump to be increased in the event that the fluid reservoir **27** is deeper, as shown in FIG. **3***b*. By accommodating variable depth and variable entrance angle (by adjustment of the angle between the first portion **19***a* of the frame relative to the second portion **19***b*) a variety of different types of reservoir edge conditions and depths can be accommodated.

Referring to FIG. **4***a*, the housing **3** is shown in greater detail. The outlets **5***a*, **5***b*, **5***c* are tangential to the radius of the housing and are also angled upwardly, relative to when the housing is in a working position. In conventional pump housings, fluid exits tangentially and is then required to execute a 90° bend; by providing an upward angle to the tangential housing, a more gradual transition is created, resulting in less fluid pressure loss. Referring additionally to FIG. **4***b*, it can also be seen that providing the upward angle to the tangential outlets **5***a*, **5***b*, **5***c* results in a much larger opening area, denoted as **5***a*', **5***b*', **5***c*' within the housing. This opening area **5***a*', **5***b*', **5***c*' eventually constricts down to the diameter of the outlet conduits **6***a*, **6***b*, **6***c*. However, by providing a larger opening area within the housing and gradually transitioning to a smaller opening area, fluid pressure drop is reduced. The tangential fluid outlets **5***a*', **5***b*', **5***c*' therefore allow higher flow rates for a given power input due to the upward angle, which makes the upward turn more gradual and creates a larger opening within the housing that gradually transitions to the outlet connector diameter. The impeller **26** is also shown.

For manure pumping applications, in particular, it is known that fluid conduits and pump outlets having diameters of less than about 5" are prone to plugging with debris. It is important to provide a certain minimum outlet area in order to reduce pump pressure drop and energy loss for a given flow rate. It has been found that use of multiple smaller outlets allows the desired minimum outlet area to be provided, while advantageously allowing the impeller size to be reduced as compared with a single opening. This leads to a reduction in the power required to provide a certain flow rate. An alternative approach is to provide a larger or similar sized impeller as would be used with a single outlet opening and realize an increased flow rate through the pump at a given power input. The multiple outlet configuration thereby co-operates with the impeller design to provide a number of potential benefits, according to the application requirements.

Referring additionally to FIG. **5**, the impeller **26** is shown in greater detail. It can be seen that each of the vanes **31**

comprises a flat portion **32**, perpendicular to the direction of rotation of the impeller **26** (clockwise about the center **33**), and a curved portion **34** that is curved forwardly in the direction of travel. The area of the curved portion **34** and thus the degree of curvature increases progressively with distance from the center **33** of the impeller. This has the effect of directing the fluid both tangentially and upwardly, towards the upwardly angled outlets **5***a*, **5***b*, **5***c*. Since the fluid is already being directed upwardly by the impeller **26**, the result is less fluid pressure loss upon entering the outlets **5***a*, **5***b*, **5***c* than would otherwise occur if a directional change were induced solely due to friction between the fluid and the housing **3**. The forwardly curved vane portion **34** therefore co-operates synergistically with the housing, specifically the upwardly angled tangential outlets **5***a*, **5***b*, **5***c*, to reduce pressure loss and therefore provide a greater flow rate for a given power input than would otherwise be obtained.

Returning briefly to FIG. **1**, due to the enhanced flow rate provided by the design of the housing **3** and impeller **26**, the pump inlet **4** in the bottom of the housing is preferably provided as a single central opening having a diameter that is at least a third of the diameter of the housing, more preferably at least half the diameter of the housing. This over-sized pump inlet allows the desirable high fluid flow rate to pass through the pump without internal cavitation. Resuming with FIGS. **4-5**, in order to prevent pump inefficiency due to fluid short circuiting at the center of the impeller **26**, the lower edge of each vane **31** is equipped with a blocking plate **35** that is perpendicular to the flat portion **32**. The plate **35** has a curved edge and increases in area towards the center **33** of the impeller **26**. The blocking plate **35** has the effect of occluding some of the area of the inlet **4** near the center **33** to prevent short-circuiting of fluid between the vanes **31** due to the large area of the inlet **4**. This illustrates yet another manner in which the design of the impeller **26** co-operates with the design of the housing **3** to improve pump performance.

Referring to FIG. **9**, a pump according to the invention is shown that is similar in most respects to the pump described with reference to FIGS. **1-8**, with features denoted by like reference numerals. However, the housing **103** has two fluid outlets **105***a*, **105***b*. The fluid outlets **105***a*, **105***b* are connected to two connectors **106***a*, **106***b* that meet at a substantially Y-shaped combiner **107**. The function and operation of the remaining components are otherwise similar.

Referring to FIG. **10**, a pump according to the invention is shown that is similar in most respects to the pump described with reference to FIGS. **1-8**, with features denoted by like reference numerals. However, the housing **203** has four fluid outlets **205***a*, **205***b*, **205***c*, **205***d*. The fluid outlets **205***a*, **205***b*, **205***c*, **205***d* are connected to four connectors **206***a*, **206***b*, **206***c*, **206***d* that meet at a combiner **207**. The function and operation of the remaining components are otherwise similar.

Referring to FIG. **11**, a pump as described with reference to FIG. **9** is shown. However, the fluid conduit **2** comprises a nozzle body **10** to which is connected an agitator nozzle **9**. The nozzle body **10** provides a fluid connection between the fluid conduit **2** and the nozzle **9** via a flexible connector **12**. The flexible connector **12** may be made from, for example, an elastomeric material. The flexible connector **12** allows the angular orientation of the nozzle **9** to be adjusted relative to the longitudinal axis **11**.

A nozzle orientation means **13** is provided for effecting this adjustment in orientation. In the embodiment shown, the orientation means **13** comprises a pair of C-shaped linkages **14***a*, **14***b* located on either side of the nozzle **9** and connecting the nozzle **9** to the nozzle body **10**. The C-shaped linkages **14***a*, **14***b* are each actuated by a pair of hydraulic linkage cylinders **15***a*, **15***b*. Each C-shaped linkage pivots in the middle upon actuation of the cylinders to open or close, thereby adjusting the angular orientation of the nozzle **9** relative to the pump body. However, due to limitations in the stroke of the linkage cylinders **15***a*, **15***b*, the orientation means also comprises an orientation cylinder **16** interconnected by orientation linkages **17***a* and **17***b* with one of the C-shaped linkages **14***a* and the nozzle body **10**. The orientation cylinder **16** permits larger macro adjustments to be made to the orientation of the nozzle **9**, whereas the smaller linkage cylinders **15***a*, **15***b* permit fine adjustments to be made.

The nozzle body **10**, and therefore the nozzle **9**, are rotatable about the longitudinal axis **11**. The nozzle body **10** includes sealing means, such as O-rings, to prevent fluid leakage at the site of rotation. The nozzle body comprises a nozzle sun gear **18**, which is engaged by a nozzle moon gear (not shown in FIG. **11**) that is driven by a hydraulic motor (not shown in FIG. **11**). Activation of the motor in a clockwise or counter-clockwise direction causes an opposite rotation of the sun gear **18** and the nozzle body **10**. By adjustment of both the rotation of the nozzle body **10** about the longitudinal axis **11** and the angular orientation of the nozzle **9**, any desired orientation of the nozzle may be created relative to the pump.

The foregoing describes preferred embodiments of the invention and is not meant to be construed in a limiting sense. Persons skilled in the art will readily appreciate other variants and mechanical equivalents that may achieve the objects and advantages of the present invention without departing from the scope of the accompanying claims.

The invention claimed is:

1. A pump for immersion within a fluid reservoir comprising:

a pump body comprising an elongated fluid conduit having a longitudinal axis;

a housing located at a bottom end of the pump body, the housing comprising a fluid inlet and at least three tangential fluid outlets;

a combiner for creating a fluid connection between the outlets and the fluid conduit; and,

an impeller located within the housing having vanes shaped to direct the fluid tangentially within the housing.

2. The pump according to claim **1**, wherein the pump further comprises a frame, the pump body pivotable about at least a portion of the frame from a substantially horizontal transport position to a non-horizontal working position.

3. The pump according to claim **2**, wherein the pump further comprises a frame adjustment means for adjusting an angular relationship between the pump body and horizontal.

4. The pump according to claim **1**, wherein the pump body and fluid conduit are extensible along a longitudinal axis to vary a length of the pump.

5. The pump according to claim **4**, wherein the pump further comprises a drive means for providing power to the impeller, the drive means adapted for adjustment with the pump body along the longitudinal axis.

6. The pump according to claim **1**, wherein the vanes are configured to direct fluid tangentially and upwardly within the housing.

7. The pump according to claim **1**, wherein the inlet is located in a bottom of the housing.

8. The pump according to claim **7**, wherein the inlet comprises a single central opening having a diameter that is at least a third of a diameter of the housing.

9. The pump according to claim **1**, wherein the pump further comprises an agitator nozzle in fluid communication

with the conduit for directing a portion of the fluid in the conduit outwardly from the pump back to a surface of the fluid reservoir.

10. The pump according to claim **9**, wherein the agitator nozzle is connected to the fluid conduit by a rotatable nozzle body and is rotatable about the longitudinal axis.

11. The pump according to claim **10**, wherein the pump further comprises a nozzle orientation means for adjusting an exit trajectory of the nozzle.

12. The pump according to claim **10**, wherein the nozzle or nozzle body further comprises a means for controlling a fluid flow rate through the nozzle.

13. The pump according to claim **1**, wherein the fluid outlets direct fluid upwardly from the housing at an angle of from 20 to 70 degrees relative to a plane of rotation of the impeller.

14. The pump according to claim **1**, wherein the fluid outlets are arcuately shaped.

15. The pump according to claim **1**, wherein the combiner directs fluid from the outlets upwardly along the body towards a bottom end of the fluid conduit.

16. The pump according to claim **1**, wherein the housing and the impeller cooperate to direct fluid tangentially and upwardly into the fluid outlets.

17. The pump according to claim **1**, wherein the fluid conduit is telescoping.

18. The pump according to claim **1**, wherein the three fluid outlets are evenly spaced apart about the housing.

19. The pump according to claim **1**, wherein the fluid outlets are upwardly oriented.

20. The pump according to claim **1**, wherein at least a portion of each fluid outlet is on a top of the housing.

21. The pump according to claim **20**, wherein the fluid outlets receive fluid flowing upwardly out of the housing.

22. A pump for immersion within a fluid reservoir comprising:

a frame;

a telescoping pump body connected to the frame, the body comprising a telescoping fluid conduit, the body and conduit extensible along a longitudinal axis;

a frame adjustment means for pivoting the telescoping pump body from a substantially horizontal transport position to a non-horizontal working position;

a housing located at a bottom of the pump body comprising a bottom fluid inlet and at least three tangential fluid outlets;

a combiner for creating a fluid connection between the outlets and the telescoping fluid conduit, the combiner directing fluid from the outlets upwardly along the body and towards a bottom end of the fluid conduit;

an impeller located within the housing having vanes shaped to direct the fluid tangentially within the housing;

a drive means for providing power to the impeller, the drive means extensible with the telescoping pump body;

an agitator nozzle for directing a portion of the fluid outwardly from the pump back to a surface of the fluid reservoir, the agitator nozzle rotatable about the longitudinal axis; and,

a nozzle orientation means for adjusting an exit trajectory of the nozzle.

23. The pump according to claim **22**, wherein each fluid outlet has an opening area that is larger at the housing and transitions to a smaller opening area.

24. The pump according to claim **22**, wherein the fluid outlets direct fluid upwardly from the housing at an angle of from 20 to 70 degrees relative to a plane of rotation of the impeller.

25. The pump according to claim **22**, wherein the fluid outlets are arcuately shaped.

26. The pump according to claim **22**, wherein the housing and the impeller cooperate to direct fluid tangentially and upwardly into the fluid outlets.

27. The pump according to claim **22**, wherein each fluid outlet has an opening area that is larger at the housing and transitions to a smaller opening area.

28. The pump according to claim **22**, wherein the three fluid outlets are evenly spaced apart about the housing.

29. The pump according to claim **22**, wherein the fluid outlets are upwardly oriented.

30. The pump according to claim **22**, wherein at least a portion of each fluid outlet is on a top of the housing.

31. The pump according to claim **30**, wherein the fluid outlets receive fluid flowing upwardly out of the housing.

* * * * *