Flow Properties of Animal Waste Slurries

M. Kumar, H. D. Bartlett, N. N. Mohsenin
MEMBER ASAE MEMBER ASAE

AGRICULTURAL production and processing generates much organic waste which is of significant economic and aesthetic impact. Livestock manure and associated waste water from large scale animal production systems, crop residues and waste from processing plants constitute the principal source of waste.

Hydraulic transport provides a clean and low cost method of handling these waste materials as a slurry. However, little data are available on the flow properties of such organic waste materials for design of hydraulic transport systems.

This paper reports on work done to develop a coaxial cylinder viscometer for determining the shear diagrams and viscosities of animal waste slurries with respect to dilution, sawdust content and temperature (Kumar, 1969). The effect of Dilution on the flow properties was determined in order to establish optimum consistency for pumping efficiency. Because sawdust is a commonly used bedding material, its effect on flow properties was included in this investigation. The study of flow properties of manure slurries in relation to temperatures was included because of the varying temperatures under which the material is handled.

RELATED RESEARCH

Extensive research has been done on the biological decomposition of excrement, but very little has been reported on the flow properties of these fluids. Taiganides et al, (1964) stated there is a lack of basic information on the physical and chemical properties of manure, which are needed for the design of handling and treatment equipment. Hansen (1959) in studying manure handling systems, indicates that a difficulty involved in the design of liquid manure pumps is the complexity of the physical and chemical nature of the material. According to Schneider (1958), manure being a mixture of solids and water should be treated as non free-flowing materials with non-Newtonian flow characteristics. Sobel (1965) described the flowability of manure and classified it into three categories, semisolid, semiliquid and liquid.

Hart et al. (1966) indicates that a slurry of between one and four percent total solids content is a good compromise between excessive volume and easy handling.

In studying the flow properties of disperse systems, Herman (1953) observed that the presence of rigid particles in a flowing solvent disturbed the initial flow and that the energy dissipated inside the flowing mass was increased. Stepanoff (1964) states that solids suspended in a liquid cannot absorb, store or transmit pressure energy which is a property of fluids. Estep (reference 7) suggests that a manure pump installation might well be designed for friction head loss 10 percent greater than would be expected for water.

Mohsenin (1970) defines a non-Newtonian fluid as a fluid in which the relationship between shear stresses and shear rates is nonlinear. Apparent viscosity as applied to non-Newtonian fluid is the viscosity of a Newtonian liquid exhibiting the same resistance to flow at the chosen shearing stress or shearing rate. It is determined from the slope of a straight line connecting the chosen points on the nonlinear curve to the origin.

Herman (1953) found that in many cases, even in very dilute solutions, there was no constant viscosity coefficient and, accordingly, Newtonian methods of analysis could not be applied to the solutions. Mitchell and Peart (1968), Van Gilst et al. (1966), and Herum et al. (1966) individually conducted a study on the apparent viscosity of several organic slurries consisting of ground corn and water which had a moisture content range from 63.6 percent to 75 percent wet basis. The slurries studied showed time dependency effects.

Charm (1963 and 1960) and Harper and Elsahrige (1965) have reported some data on flow constants for several organic fluids and food materials.

Steiner (1960) showed that melted chocolate follows Casson's equation:

$$\sqrt{T} = K\sqrt{\frac{dv}{dr}} + \sqrt{Ty} \quad \ldots \quad [1]$$

However, Harper (1961), who employed a specially designed concentric cylinder viscometer for obtaining shear stress and shear rate on pear puree and tomato concentrates, stated that Casson's equation was more difficult to use and did not give good agreement with experimental data as a power law equation. According to Caldwell and Babbitt (1941) a standard viscometer may be designed and calibrated so that pipe flow can be evaluated by this viscometer.

THEORETICAL CONSIDERATION

According to Van Wazer et al. (1963), when a rotating body is immersed in a liquid it undergoes a viscous drag, which is a function of the speed of rotation of the body. In using the viscosity equation, the relationship between the rate of shear and the shearing stress is the same, whether the bob or the cup is rotated. The chief advantage of rotational viscometric procedures is that continuous measurements, at a given rate of shear or shear stress, may be made for extended periods of time. Subsequently, measurements such as time-dependency may be determined.

A comprehensive description of rotational viscometer designs is given by Wilkinson (1960). The most common type is the coaxial cylinder device, which consists of a cylinder (bob) of radius R_b suspended in the sample fluid in a cup of radius R_c. The liquid covers the inner cylinder to a height h. The bottom of the inner cylinder is separated from the bottom of the cup by a distance ℓ. The cup rotates with an angular velocity ω.

The following assumptions are made (Eirich, 1960):

1. The liquid is incompressible.
2. The motion of the liquid is not turbulent.
3. The stream lines are circles on the horizontal plane perpendicular to the axis of rotation.

Article was submitted for publication on November 9, 1970; reviewed and approved for publication by the Structures and Environmental Division of ASAE on December 28, 1971.

Authorized for publication as paper number 3874 in the Journal Series of the Pennsylvania Agricultural Experiment Station.

The authors are: M. KUMAR, Graduate Assistant, H. D. BARTLETT and N. N. MOHSENIN, Professors, Agricultural Engineering Dept., Pennsylvania State University, University Park.

Exhibit 1128
Bazooka v. Nuhn - IPR2023-01161
Page 1 of 5

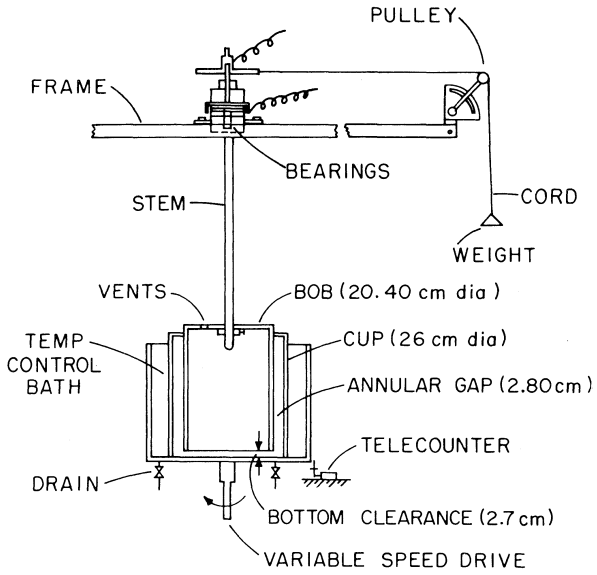

FIG. 1 Schematic diagram of coaxial cylinder viscometer.

4. The motion of the fluid in the bob is stationary.

5. There is no relative motion between the cylinders and the material in immediate contact with the cylinder.

6. The motion of the liquid is the same on each plane perpendicular to the axis of rotation, that is, the motion is incompressible, i.e. neglect the edge effect, end effect and normal forces (cross viscosity, Weissenberg effect, etc.).

In the steady state of flow, the external torque equals the opposing torque in the fluid, such that:

$$M = 2\pi r^2 hT \quad \ldots\ldots\ldots\ldots \quad [2]$$

Non-Newtonian flow is the general case where the rheological behavior can be shown with power law equations. The equation for each special case can be derived from the equations of non-Newtonian flow by using the correct value of exponent n.

The empirical power law equation is as follows:

$$T = c(-r \frac{d\omega}{dr})^n \quad \ldots\ldots\ldots \quad [3]$$

The moment is:

$$M = 2\pi r^2 h T = 2\pi r^2 h c (-r \frac{d\omega}{dr})^n \quad \ldots\ldots\ldots\ldots\ldots\ldots\ldots \quad [4]$$

Rearranging and integrating for the boundary values and substituting for M in terms of shear stress, $T\omega$, at the inner cylinder, it can be reduced to:

$$\Omega = (\frac{n}{2}) (\frac{T\omega}{c})^{1/n} [1-(\frac{R_b}{R_c})^{2/n}] \quad \ldots\ldots\ldots\ldots\ldots\ldots\ldots \quad [5]$$

Taking the logarithm of both sides, equation [5] can be converted to the slope-intercept form of the equation of a straight line, with log $T\omega$ versus log Ω. The slope of this line is the exponent n. With the value of the exponent known, the constant c can be calculated from equation [5].

Apparent viscosity can be determined as:

$$\eta'' = c^{1/n} T\omega^{(1-1/n)} \quad \ldots\ldots \quad [6]$$

End Effect

The previous assumptions are valid for infinitely long cylinders. There is always a viscous drag due to the stress on the bottom surface of the bob and the cup.

According to Lindsley and Fisher (1947), there are four ways of determining the end effect. The method used in this paper is to calibrate the instrument with liquids of known viscosity, thus, absorbing the end effect in the instrument constant.

End effect may be considered as equivalent to an increase in the effective depth of immersion from h to h + Δh. Therefore, in the rotational coaxial cylinder viscometer

$$M = \frac{4\pi (h+\Delta h)}{\frac{1}{R_b^2} - \frac{1}{R_c^2}} \eta \Omega \quad \ldots\ldots \quad [7]$$

FIG. 2 The coaxial cylinder viscometer.

where Δh is the end correction and it is a function of R_b, R_c, h and ℓ.

By plotting the graph $\frac{M}{\Omega}$ versus h and extending the straight line towards axis h, it will give the intercept on the x-axis, which will be equal to Δh.

For separation at the bottom greater than 1 cm and for viscosity within the range of 1 to 150 poise, the end effect is nearly constant. Calibration of the apparatus with a single standard sample is sufficiently accurate for most purposes.

INVESTIGATION PROCEDURE

A viscometer was designed after considering the desirable features of the coaxial cylinder viscometer, which were given by Harper (1961). The turbulent flow criteria, Merril (1956), as given below, was incorporated in the design:

$$\frac{2\pi R_b (R_c - R_b) N C}{\eta} < 500 \quad .. \quad [8]$$

where

C = density of fluid

N = revolutions of rotor per second

The basic components of coaxial cylinder viscometer are shown schematically in Fig. 1 and illustrated in Fig. 2.

An electrically powered variable speed hydraulic drive was coupled through a train of pulleys and V-belts to rotate the cup. The cup was made of steel 26 cm inside diameter and 35.50 cm long. An annular gap was provided to fill with hot or cold liquid for maintaing a constant temperature.

Two drain valves were provided for removing the sample material and constant temperature liquid.

The other component of the coaxial head consisted of an aluminum cylinder (bob) 20.40 cm outside diameter by 30.50 cm long. The cylinder was open at the bottom and had four vent holes of 1.25 cm diameter at the top.

A frame structure with four corner members and two cross members was used to support the bob; slots were made in the crosshead member to pro-

Exhibit 1128
Bazooka v. Nuhn - IPR2023-01161
Page 2 of 5

TABLE 1. PARTICLE SIZE AND DISTRIBUTION OF FRESH MANURE

Sieve	Particle size, mm	Total solids retained on sieve, g	Percentage of total solids	Percentage by weight
4	4.669	1.0548	6.808	93.192
8	2.380	2.6032	16.798	76.394
16	1.190	1.9933	12.862	63.532
30	0.595	1.4131	9.118	54.414
50	0.297	1.5513	10.010	44.404
100	0.105	0.9512	6.138	38.266
140	0.119	0.6432	4.138	34.116
Finer than 140		5.2870	34.116	

vide a means for positioning the bob coaxially with the cup. The bob was supported by a vertical shaft referred to as the stem. It was supported and aligned in the crosshead frame member with two antifriction tapered roller bearings.

A telecounter was mounted on the frame for measuring the number of revolutions.

A torque pulley of 13 cm diameter was mounted on the top of the stem.

An antifriction pulley was mounted to the frame structure to support a restraining cord. One end of the cord was connected to the periphery of the pulley and the other end supported the hanging weight which could be adjusted.

The coaxial cylinder viscometer was adjusted for uniform annular gap and clearance between the bottom of the bob and cup.

The viscosity of an organic fluid depends on its physical and chemical properties, moisture content, total solids, volatile solids, fixed solids, particle density, bulk density and particle sizes and distribution. These properties were determined according to ASTM (1968) specifications.

The chemical properties, such as crude protein, crude fiber, ether extract, nitrogen free extract and ash, were determined by the standard procedure (Triebold and Aurand, 1963) which had been modified at The Pennsylvania State University.

DETERMINATION OF APPARATUS CONSTANT

Apparatus constant is a factor which gives the true apparent viscosity after multiplying it by the theoretical velocity. This method has the advantage of including all of the end and edge effects, slippage, turbulent interferences, etc. and allows calculation of apparent viscosity directly from the measured data.

The apparatus constant was obtained by calibration of the viscometer with a standard fluid (oil-SAE-90). Its viscosity was measured by three viscometers, namely; Capillary, Stormer and MacMichael.

The mean viscosity of the SAE-90 oil, at 70 F was determined as 347.10 centipoise. The viscosity of the above oil measured by the coaxial cylinder viscometer was found as 414.21 centipoise.

$$\therefore \text{ Apparatus Constant} = \frac{347.10}{414.21} = 0.8380$$

MATERIALS FOR ANALYSIS

Samples of fresh manure were obtained directly as excreted from lactating Brown Swiss cows, on a ration of grain, hay and silage, at the dairy center of the Pennsylvania State University. Also, samples were obtained from the gutter which contained urine, bedding, grit and waste forage. In addition, samples were taken from the liquid manure storage tank which contained bedding, urine, fresh and old manure and water.

TESTING PROCEDURE

Quantities of the respective samples were poured into the cup to a height of 20 cm on the bob. The viscometer was turned on to a preselected speed setting and weight was added to the torque measuring cord until the bob remained in a fixed position, denoting that the torque due to the product of the applied weight times the radius of the torque pulley was equal to the torque due to shearing force in the slurry. The time for 20 revolutions was measured with a stopwatch. The rotational speed was then changed to another setting and the weight was adjusted for equilibrium conditions. The procedure was repeated for a minimum of six settings. The temperature was maintained constant by filling the outer gap with hot or cold water or ice, which was required to have the same temperature for each sample. In this manner shear stress and shear rate were determined and shear diagrams were plotted.

For determining the effect of dilution on viscosity, five dilutions were used. The different dilutions were made by adding water to the manure. All values of solids content were determined on a dry basis. Three levels of sawdust content (0, 5 and 10 percent) were used to determine the effect of sawdust on the viscosity of manure.

Three temperatures (46, 76 and 108 F) were utilized to evaluate the effect of temperature on the viscosity of the manure. The samples were cooled to 46 F in a cold room prior to running the test. To attain the 108 F temperature, the samples were heated on a hot plate. The temperature was maintained constant for all of these tests by adding cold or hot water or ice to the annular gap which worked as a constant temperature bath.

In addition, tests were run at 76 F on samples of manure from the gutter and from the liquid manure storage pit.

RESULTS DETERMINED

Physical characteristics and chemical properties of fresh cow manure:

Moisture content = 84.52 percent
Total solids content = 15.48 percent
Volatile solids (on the basis of total solids content) = 89.43 percent
Fixed solids (on the basis of total solids content) = 10.57 percent
Bulk density (at 84.52 percent moisture content) = 1.12 g per cc
Average particle density = 1.43 g per cc
Crude Protein = 13.73 percent
Crude Fiber = 27.36 percent
Ash = 10.57 percent
Ether Extract = 5.70 percent
Nitrogen Free Extract = 42.64 percent Particle size and distribution was as shown in Table 1.

Effect of Dilution

As total solids content was decreased at constant shear rate, shear stress, viscosity index and apparent viscosity were decreased, see Table 2 and Fig. 3. When the slurry was below five percent total solids content, it showed Newtonian flow properties, and above six percent it showed non-Newtonian (pseudoplastic) flow properties.

Effect of Sawdust

All mixtures of sawdust and manure above six percent total solids content showed a pseudoplastic (non–Newtonian) behavior. However, the flow at five percent sawdust level and

Exhibit 1128
Bazooka v. Nuhn - IPR2023-01161
Page 3 of 5

TABLE 2. CONSOLIDATION OF RESULTS FROM VARIABLE SHEAR STRESS TESTS

Description	Temp., deg F	Total solids content, percent	Shear stress,* dynes per sq cm	n	c $\frac{\text{dynes-sec}^n}{\text{cm}}$,	Apparent* viscosity, centipoise
Fresh manure with no sawdust	76	11.02	715.0	0.3820	195.000	1997.10
	"	9.28	444.0	0.2980	160.251	1217.45
	"	8.59	353.5	0.2745	137.298	944.86
	"	7.69	230.0	0.3645	66.854	649.86
	"	6.17	64.0	0.5428	12.619	268.46
Fresh manure with 5 percent sawdust	76	11.11	1000.0	0.4326	229.3239	3328.00
	"	8.85	296.0	0.3705	83.822	823.44
	"	7.78	105.0	1.4590	22.163	296.91
	"	5.30	22.0	1.000	0.734	61.51
Fresh manure with 10 percent sawdust	76	10.91	633.5	0.4698	128.062	1766.33
	"	9.08	207.0	0.3549	61.490	567.31
	"	7.96	91.2	0.5000	16.383	246.62
	"	6.06	28.0	0.6411	2.939	69.73
Fresh manure	46	8.60	589.0	0.3220	198.320	1679.56
	"	7.03	434.3	0.2863	162.748	1180.66
	"	5.15	140.3	1.0000	4.746	397.71
	"	4.08	42.3	1.0000	1.412	118.33
Fresh manure	108	8.60	302.0	0.2610	125.381	871.99
	"	7.03	285.0	0.3800	65.011	669.39
	"	5.15	45.0	1.0000	2.177	182.43
	"	4.08	12.2	1.0000	0.601	50.36
Manure from gutter	76	14.82	815.0	0.3783	225.429	2285.55
	"	10.95	291.8	0.6026	37.2204	802.15
	"	7.22	82.1	0.6945	7.824	233.12
	"	6.47	73.6	0.5963	9.698	206.12
Manure from liquid storage pit	76	11.05	300.0	0.6094	37.223	818.74
	"	8.45	120.0	0.8391	6.818	329.66

*Shear stresses and apparent viscosities are calculated at shear rate of 30 l per sec.

5.3 percent total solids content was found to be Newtonian. Apparent viscosity of manure without sawdust, up to approximately nine percent total solids content, was more than the five and ten percent sawdust mixtures. This was believed to be due to a decrease of cohesive forces between manure particles. At this dilution, there was enough water to give good slippage of manure particles. Therefore, shearing force was decreased and the apparent viscosity was less. Above nine percent total solids content (five percent sawdust) apparent viscosity increased over the values for manure without sawdust. Apparently the frictional forces due to sawdust particles increased and the cohesive forces between manure particles remained the same, causing an increase in apparent viscosity. Above approximately 11.2 percent total solids content (10 percent sawdust) the apparent viscosity was greater than with no sawdust. In this case there was insufficient water to separate the individual particles. Therefore, the measurements indicated the frictional forces between individual sawdust particles, instead of the slippage of the fluid. This effect is shown in Fig. 4 and Fig. 5.

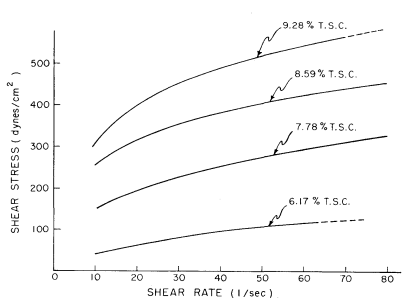

FIG. 3 Shear diagram (effect of dilution on fresh manure at 76 F).

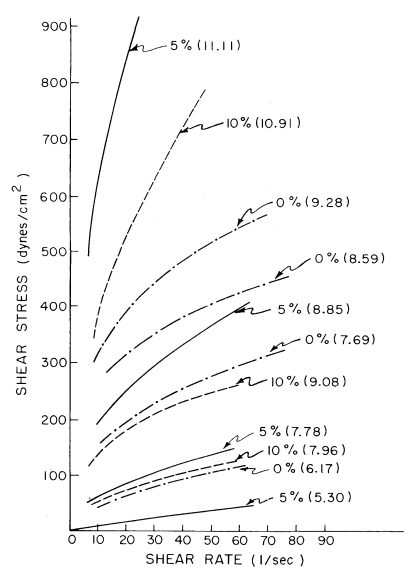

FIG. 4 Shear diagram (effect of sawdust content, percent, on fresh manure at 76 F).

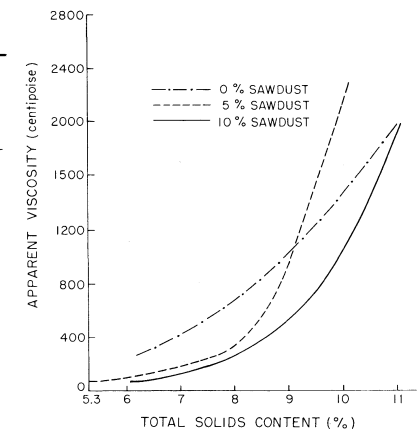

FIG. 5 Apparent viscosity of fresh manure at 76 F for various total solids content and sawdust levels (shear rate 30 ℓ per sec).

Effect of Temperature

Experiments were run at 46, 76 and 108 F to determine the effect of temperature on viscosity of manure. Below 5.15 percent total solids content at 76 F and 108 F the flow was Newtonian, and above 6.17 percent at 46, 76 and 108 F, pseudoplastic (non-Newtonian) flow was observed. The exact transition point between Newtonian and non-Newtonian flow was difficult to establish.

Shear diagrams and graphs of apparent viscosity versus total solids content at different temperatures are shown in Fig. 6 and Fig. 7, respectively. It can be seen from the graphs that apparent viscosity of manure increases with a decrease in temperature in the range of 46 F to 76 F. At 108 F the apparent viscosity was greater than at 76 F and the slope of the curve also changed. It would appear that, at the higher temperature, some chemical changes took place, causing a change in the physical and chemical properties of the slurry. A similar type of occurrence was obtained by Herum et al. (1966) when working with swine feed.

Manure from Gutter

These samples contained digested material as well as urine, sawdust, grit

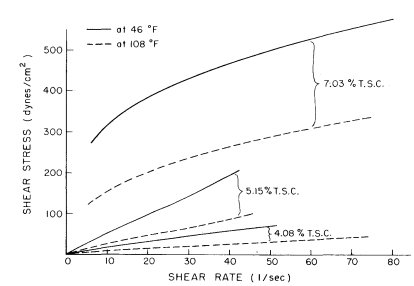

FIG. 6 Shear diagram (effect of temperature and dilution effect on fresh manure.

Exhibit 1128
Bazooka v. Nuhn - IPR2023-01161
Page 4 of 5

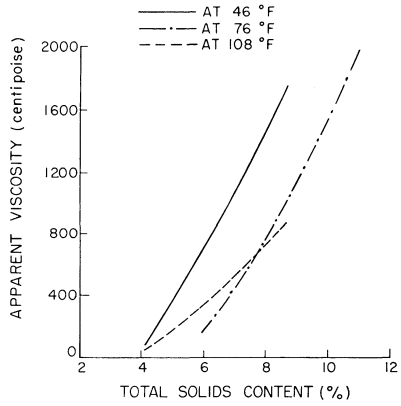

FIG. 7 Apparent viscosity of fresh manure at various total solids content and temperature (shear rate 30 ℓ per sec).

and waste forage. The results of tests on manure from the gutter at various dilutions are given in Table 2.

VISCOSITY OF LIQUID MANURE FROM MANURE STORAGE TANK

Samples were obtained from the liquid manure storage tank and analyzed for forage straw, manure particles, sawdust, crude fibre, grit particle and moisture content. The original sample of liquid manure was found to have 11.05 percent total solids. It's apparent viscosity was 818.74 centipoise at 76 F. After diluting to 8.45 percent the apparent viscosity was reduced to 329.66 centipoise. The flow in both cases was pseudoplastic (non-Newtonian). The results are tabulated in Table 2.

CONCLUSIONS

It was found that the coaxial cylinder type viscometer is suitable for rheometry of organic waste slurries. The time dependency study of the slurries can be investigated by this viscometer. The viscosity of manure slurry decreases with an increase in dilution. It was further noticed that the flow is Newtonian at low total solids content (below five percent). The addition of sawdust up to as much as 10 percent by weight of the amount of manure decreases the viscosity of a slurry having a total solids contents up to approximately nine percent. Furthermore, it was noted that the viscosity of fresh manure slurry decreases with an increase of temperature.

References

1 ASTM Standards, Part 11 Bituminous materials for highway construction, waterproofing and roofing; soils, skid resistance. 1968. American Society for Testing and Materials, Philadelphia.

2 Caldwell, A. and E. Babbitt. 1941. The flow of muds, sludges and suspensions in circular pipe. Trans. of the AICE 37(1):237-266.

3 Casson, N. 1959. Rheology of disperse systems. (C. C. Mill edition) Pergamon Press, New York.

4 Charm, S. E. 1963. The direct determination of shear stress-shear rate behavior of feeds in the pressure of a yield stress. Journal of Food Science 28(1):107-113.

5 Charm, S. E. 1960. Viscometry of non-Newtonian food materials. Food Research 25(1):351-362.

6 Eirich, F. R. 1960. Rheology, theory and applications Vol. 3. Academic Press, New York and London, 29, 30, 31, 37.

7 Estep, A. J. Handling liquid manure by sprinklers. Unpublished paper, Cooperative Extension Service, Washington State University, Vancouver, Washington.

8 Hansen, C. M. 1959. Engineering principles in handling liquid materials. AGRICULTURAL ENGINEERING 39(9):546-551.

9 Harper, J. C. 1961. Coaxial cylinder viscometry for non-Newtonian fluids. The Review of Scientific Instruments 32(4):425-428.

10 Harper, J. C. and A. F. Elsahrige. 1965. Viscometric behavior of tomato concentrates. Journal of Food Science 30(3):470-476.

11 Hart, S. A., J. A. Moore and W. H. Hale. 1966. Pumping manure slurries. Proceedings of National Symposium on Animal Waste Management. ASAE Publication No. SP-0366, 34, American Society of Agricultural Engineers, St. Joseph, Mich. 49085.

12 Herman, J. J. 1953. Flow properties of disperse systems. Interscience Publishers, Inc. New York.

13 Herum, F. L., G. W. Issacs and R. M. Peart. 1966. Flow properties of the highly viscous organic pastes and slurries. TRANSACTIONS OF THE ASAE 9(1):45-47, 51.

14 Kumar, M., 1969. Flow properties of animal waste slurries. M. S. Thesis, Agricultural Engineering Department, The Pennsylvania State University, University Park, Pa.

15 Lindsley, C. H. and E. K. Fisher. 1947. End effect in rotational viscometer. Journal of Applied Physics 18(11):988-996.

16 Merril, E. W. 1956. A coaxial cylinder viscometer for non-newtonian fluids. Journal Instrument Society of America 3(4):124-128.

17 Mitchell, B. W. and R. M. Peart. 1968. Measuring apparent viscosity of organic slurries. TRANSACTIONS OF THE ASAE 11(4):523-525.

18 Mohsenin, N. N. 1970. Physical properties of plant and animal materials. Vol. I: Structure, physical characteristics and mechanical properties. Gordon and Breach Science Publishers, New York.

19 Schneider, E. C. 1958. Non-free flowing materials: Handling techniques for hay and manure. AGRICULTURAL ENGINEERING 39(9):558-559.

20 Sobel, A. T. 1965. Some physical properties of animal manures associated with handling. ASAE Paper No. NA 65-11.

21 Steiner, E. H. 1960. The rheology of disperse systems. Pergamon Press, New York.

22 Stepanoff, A. J. 1964. Pumping solid-liquid mixtures. Mechanical Engineering 86(9):29-35.

23 Taiganides, E. P., E. T. Hagen, E. R. Baumann and H. P. Johnson. 1964. Properties and pumping characteristics of hog wastes. TRANSACTIONS OF THE ASAE 7(2):124-127,129.

24 Triebold, H. O. and L. W. Aurand. 1963. Food composition and analysis, D. Van Nostrand Company, Inc., New York.

25 Van Gilst, C., R. M. Peart, T. W. Perry and R. A. Pickett. 1966. An automatic slurry feeding system for swine. AGRICULTURAL ENGINEERING 47(1):24-25,31.

26 Van Wazer, J. R., J. W. Lyons, K. Y. Kim and R. E. Colwell. 1963. Viscosity and flow measurement. Interscience Publishers, Inc., New York.

27 Wilkinson, W. L. 1960. Non-newtonian fluids. Pergamon Press, New York.

List of Symbols

R_b	=	radius of bob, cm
R_c	=	radius of cup, cm
h	=	height of the fluid, cm
M	=	torque on bob, dynes cm
ω	=	angular velocity of the cup, rad per sec
Ω	=	angular velocity of the cup, 1 l per sec
T	=	shear stress, dynes per sq cm
$T\omega$	=	shear stress at angular velocity ω, dynes per sq cm
ℓ	=	bottom clearance between cup and bob, cm
n	=	flow behavior index
c	=	viscosity index, $\frac{\text{dynes-sec}^n}{\text{cm}^2}$
C	=	density of fluid
η	=	viscosity of fluid centipoise
η''	=	apparent viscosity of fluid centipoise
$\frac{dv}{dr}$	=	shear rate, l per sec
r	=	radius from the axis of rotation
K	=	constant
Ty	=	intercept on the shear stress axis

Exhibit 1128
Bazooka v. Nuhn - IPR2023-01161
Page 5 of 5