Rheological properties of sand-laden dairy manure: modeling by concentration and temperature

A. R. Salehiyon[1], S. Minaei[1*] and S. J. Razavi[2]

(1. *Department of Biosystem Engineering, Faculty of Agriculture, TarbiatModares University, Tehran, 1411713116, Iran;*
2. *Department of Biosystem Engineering, College of Agriculture, Isfahan University of Technology, Isfahan, 8415683111, Iran*)

Abstract: Liquid dairy manure is applied with irrigation water or injected into the soil, as well as being used for the production of biogas. One of the problems facing dairy operations is the slurry manure transportation and pumping through pipelines to distant locations of the farm, especially when the sand content (used as bedding material) increases. In this study, rheological properties of sand-laden dairy manure (SLDM) including total solids (TS%), density and apparent viscosity were determined at four levels of manure solids (7, 10, 13 and 16 %TS) as well as the liquid manure taken from a manure separator tested at shear rates of 1.76 to 225.28 1/s using a concentric cylindrical rheometer. Effect of temperature on the apparent viscosity at five levels (10 ℃, 21 ℃, 30 ℃, 40 ℃ and 50 ℃) and various shear rates was investigated. Fresh manure collected with a scraper contained 36% sand. Results of the study showed that sand-laden manure is a non-Newtonian fluid, and behaves as a shear thinning material (pseudoplastic), but approaches Newtonian fluid when concentration decreases. Increasing the sand content, will increase density and reduce the viscosity of the slurry manure. Apparent viscosity at a shear rate of 112.64 1/s and ambient temperature of 21 ℃, for 7,10,13,16 TS% and effluent of separator was 37.1, 101.5, 352.9, 773.4 and 147.4 mPa.s, respectively. The relationship between temperature, concentration (TS%) and shear rate with apparent viscosity was represented by an exponential model.

Keywords:slurry; separator effluent; rheological properties; power law model; temperature

Citation: Salehiyon, A. R., S.Minaei, and S. J. Razavi. 2015. Rheological properties of sand-laden dairy manure: modeling by concentration and temperature.AgricEngInt: CIGR Journal, 17(1): 284-292.

1 Introduction

Improper manure slurry handling and storage may cause environmental problems such as leachate seepage into the ground and water contamination, methane and carbon dioxide emissions into the atmosphere, as well as odor and fly problems. The disposal of dairy farm manure is important both from hygienic and sustainable viewpoints (El-Mashad*et al.*, 2005). Since 1960 efficient removal of manure from the dairy farm in the form of liquid (slurry) has received great interest. High moisture content of cattle waste (approximately 85 to 87% wb) presents a challenge to farm operators (Schmitz *et al.*, 2000).

One of the common bedding materials used in dairy cow free stalls is sand, which has advantages such as uniform support for lounging and convenience of cattle, cool in the summer, non-absorbing to pathogens, and inexpensive. Sand spilling out of the stall by animal hooves during traffic can be mixed with excreted manure in the barn alleys and picked up by the gathering equipment such as scrapers. Despite the many benefits of sand, much of it causes problems such as increased load on the manure pumps, pipes and channel blockage, as well as wear and erosion of transportation and cleaning equipment.

Received date: 2014-11-02 **Accepted date:** 2014-12-22
***Corresponding author:S. Minaei,** Department of Biosystem Engineering, Faculty of Agriculture, TarbiatModares University, Tehran, 1411713116, Iran. Email: minaee@modares.ac.ir.

Cattle slurry manure pumped at about 8% TS (Howard, 1979) to 12% (Ghafoori*et al*., 2007), consumes less energy per unit volume in the turbulent flow regime.

Other processes that are affected by the flow properties of manure are mixing and separation. Mixing of slurries is essential before emptying storage tanks since the slurry would be more pumpable and increases the separation efficiency (Schofield, 1984). Solid-liquid separation of manure for improved manure management and transportation as well as reducing environmental risks, is performed using a mechanical separator. The effluent from a solid-liquid separator has a lower potential to plug transfer pipes, due to the reduced particle size of the solids (Ford and Fleming, 2002), but its rheological properties are undefined.

Due to the considerable energy consumption in transfer of manure, modern design of systems with lower power consumption is important. Approximately 11% of the energy to produce livestock is devoted to handling manure (Schofield, 1984). Therefore, a good knowledge of the rheological properties of this raw material is of crucial importance when designing and optimizing unit operations involved in its processing (Astolfi-Filho*et al*., 2010). The rheological properties also determine size, type and power of a pump based on apparent viscosity (Moeller and Torres, 1997).

Hashimoto and Chen (1976) studied the rheological properties of fresh and aerated livestock waste slurries. Schofield (1984) has conducted a literature review of factors that affect on the physical properties of agricultural manure such as type of manure collection system, type and quantity of cattle diet and rearing livestock techniques, physical factors – like the total solid content (TS%), the effect of temperature, the amount of fiber in the manure, the size of components and pH.Chen (1982) measured density of manure for TS ranging from 1% to 99% and concluded with increased TS to 16%, density will increase. Also for cow manure (dairy-beef) with 1% to 14% of solids, manure has a non-Newtonian and shear thinning fluids behavior and deviation from the Newtonian behavior increases with increase in TS%. Chen and Shetler (1983) studied the effects of temperature (14 ℃ to 64 ℃) and TS% (2.5% to 19.3%) on the rheological properties of cattle manure slurry. Chen (1986) studied the effect of temperature and solids concentrations on the rheological properties of sieved beef-cattle manure with a new modeling. El-Mashad*et al*. in 2005, studied rheological properties of non-sieved dairy cattle manure in around 10 TS% and temperature range of 30 ℃ to 60 ℃.

The objective of this study is to determine rheological properties of sand-laden dairy manure and separated liquid manure which so far has not been studied. Effects of temperature and concentration (TS%) on the rheological properties of the manure as well as modeling of viscosity with shear rate, temperature and concentration in a simple exponential model are presented.

2 Materials and methods

2.1Preparation of samples

Manure for testing was removed from a freshly scraped trench with tractor in a dairy farm and transferred in sealed plastic bags (8 kg) to the laboratory. In order to minimize microbial and chemical activity, samples were refrigerated at 6 ℃.

To evaluate the effect of solid content on rheological properties of manure, four concentration levels of 7, 10, 13, and 16 TS% were considered. Liquid manure samples were also obtained from the effluent of a screw press manure separator (Fan, Germany). The initial moisture content of raw manure was determined using the oven method at 104 ℃ and for 24 h (Chen, 1986; ASAE S358.2, 1997). Based on Equation 1, water was added to obtain samples at four levels of solids concentration.

$$W_{t2} = \left(\frac{1-M_1}{1-M_2}\right)W_{t1} \qquad (1)$$

W_t is sample weight before drying and M is moisture content on the wet basis.

To determine the mass fraction of raw manure and sand in SLDM combination used the mixture's density

(solid density) that can be calculated from the following Equation 2 (Stroshine&Hamann, 1994):

$$\rho_s = \frac{1}{\sum_1^n \frac{m_i}{\rho_i}} \quad (2)$$

In which m_i is the mass fraction of component i, ρ_i is the density of component i and ρ_s is the solid density. If the density of sand, pure manure in excretion moisture and SLDM (ρ_s) are specified, the sand mass fraction (M_S %) can be obtained from Equation 3:

$$\rho_s = \frac{1}{\frac{1-M_S}{\rho_m} + \frac{M_S}{\rho_{Sand}}} \quad (3)$$

Raw manure density (ρ_m) on excretion having 12 TS% (±2.7) is 990 kg/m^3 (ASAE D384.1, 1997) and density of dry sand is considered to be 1750 kg/m^3 (Anonymous, 2013). So Equation 4 achieved to estimate the mass fraction of sand (M_S) in fresh sand-laden dairy manure:

$$M_s = 2.3 - \frac{2279.6}{\rho_s} \quad (4)$$

2.2 Rheological measurements

Rheological characteristics of the manure were studied by using a computer-controlled rotational concentric-cylinder viscometer (Figure 1), namely, a HaakeRotovisco RV12 MVIII coaxial viscometer (Table 1). Various speeds of the drive unit were utilized to produce different shear rates. Values of shear stress (Pa), shear rate (1/s), and viscosity (mPa.s) were calculated using Equation 5, Equation 6 and Equation 7:

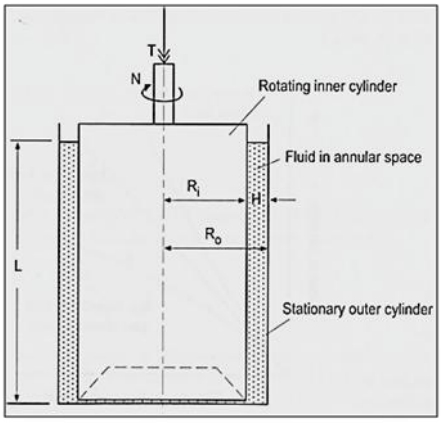

Figure 1 Schematic of concentric cylinder viscometer with inner cylinder (rotor) and outer cylinder (cup)

Table 1 HaakeRotovisco RV12 SVI coaxial viscometer characteristics

Sensor system	MVIII
Inner cylinder (rotor)	
- Radius, Ri (mm)	15.2
- Height, L (mm)	60
Outer cylinder (cup)	
- Radius, Ra (mm)	21
Radii ratio, Ra/Ri	1.38
Sample volume, V (ml)	70
Temperature: max (℃)	100
	-30
Calculation factors	
- A (Pa/scale grad.)	5.44
- M (min/s)	0.44
- G (mPa.s/scale grad.min)	12375

$$\tau = A.S(Pa) \quad (5)$$

$$\dot{\gamma} = M.n\ (1/s) \quad (6)$$

$$\text{Viscosity}: \eta = \frac{G.S}{n}(mPa.s) \quad (7)$$

where *A* is the shear stress factor, depending on the type of measuring drive unit and sensor system (Pa/scale grad.), *M* is the shear rate factor, depending on the sensor system (min/s), *G* is the instrument factor, depending on the type of measuring drive unit and sensor system grad., *n* is the actual test speed (1/min) and S is the measuring value (scale grad.).

Experiments for each concentration and temperature, were conducted in the range of shear rates 3.52 and 225.3 (1/s) which is similar to the shear rate range used by researchers to determine manure rheological properties (Chen, 1986; El-Mashad*et al.*, 2005; Astolfi-Filho*et al.*, 2010). Prior to the experiment, accuracy of the viscometer was measured and calibrated using engine oil of known viscosity. To control and stabilize the temperature, a circulating water bath and a mercury thermometer was used. Temperature at five levels of 10 ℃, 21 ℃ (ambient), 30 ℃, 40 ℃ and 50 ℃ was fixed by pumping water around the rheometer cup. Tests were performed when the temperature in thermometer stabilized. Testing of manure with 16% TS due to

Exhibit 1129
Bazooka v. Nuhn - IPR2023-01161
Page 3 of 9

limitation in supply of mentioned temperatures, was performed only at ambient temperature.

2.3 Rheological models

Various models may be employed to characterize the rheological behavior of materials, the most widely-used of which is Ostwald-de Waele model called "*Power Law*" (Equation 8):

$$\tau = K\dot{\gamma}^{n} \quad (8)$$

Where, *n* denotes the sensitivity of fluid viscosity to shear rate. This law indicates how viscosity decreases as velocity increases. For shear-thinning fluids, *n* ranges from 0 to 1. For n=1, the fluid would be Newtonian and *k* indicates viscosity. The power index presents the non-Newtonian behavior of fluids. Fluids with 0.8 < n < 1 are, generally, called Newtonian; however, for n <0.5, the fluid would be non-Newtonian, definitely (Rauwendaal, 2001).

The following Equation 9 could be used to calculate apparent viscosity of a non-Newtonian fluid, for a power-law fluid (Zadhoush*et al.*, 2007):

$$\mu_a = \frac{\tau}{\dot{\gamma}} = K\dot{\gamma}^{n-1} \quad (9)$$

Temperature and moisture content influence rheological parameters; i.e. *n*, *K* and *η* (Astolfi-Filho*et al.*, 2010; Telis-Romero *et al.*, 2005). It is indicated that viscosity decreases as the temperature increases. The dependence of apparent viscosity upon temperature is described by the Arrhenius model (Equation 10) (Zadhoush*et al.*, 2007; Astolfi-Filho*et al.*, 2011):

$$\eta \text{ or } \mu = \mu_{\infty} \exp\left(\frac{Ea}{RT}\right) \quad (10)$$

Where, μ is apparent viscosity or consistency index, *k*, (Telis-Romero *et al.*, 2005), μ_{∞} is the exponential factor (empirical constant), *Ea* represents the activation energy, *R* is the Universal gas constant, and, finally, *T* is absolute temperature. If, within a given temperature range, viscosity as well as the value of constants (*i.e.*, μ_{∞} and E_a/R) could be determined at three or more temperatures, then the apparent viscosity could be calculated within that range with an acceptable accuracy (Singh and Heldman, 2008).

Chen (1986) tested the rheological properties of cattle manures (whether diary or beef), in which particles larger than 2 mm where screened off, within 2.6 to 19.3 TS%, at temperatures between 14˚C to 64˚C, and shear rate of 0.1 to 200. Finally, a new rheological model $\tau = \eta_0\dot{\gamma} + K''\dot{\gamma}^{n''}$ was obtained, where τ is the shear stress, $\dot{\gamma}$ is the shear rate, η_0 is viscosity at infinite velocity, and K'' and n'' are rheological parameters. The results showed that dairy manure slurry has no initial yield shear stress and Herschel-Bulkley, Bingham Plastic, and Casson models do not apply. The power law is applicable to slurries with TS < 4.5%. Error least squares and nonlinear model fitting were used for determining η_0, K'' and n''. Next, η_0 and K'' were modeled based on temperature and TS%; also, n'' was constant (0.37). Chen's model could not be accurate for raw dairy manures since the tested manures were screened which limited his study due to the small rheometer spindle used.

Flow behavior index for extruded materials is usually smaller than one. The effects of temperature and moisture content (concentration) in the power law equations for extruded food stuff could be expressed with the following trivariate equation (Equation 11) (Singh and Heldman, 2008):

$$\tau = Ke^{\left(\frac{A}{T}\right)}e^{(BM)}\dot{\gamma}^{n} \quad (11)$$

Nonlinear data fitting in SPSS Statistics 18 could be used to determine the equation constants and apply them to viscosity prediction at different temperatures and moisture contents for manure mixtures.

3 Results and discussion

3. 1 Rheological properties

The initial moisture content of raw dairy manure at 104˚C was 82.18%±0.05% using the oven method with three replications, which is equal to 17.82 TS%. The mixture of manures was collected from manure channel, therefore, the effects of cattle age and weight were not considered. Total Solids content (TS%) and Moisture

Exhibit 1129
Bazooka v. Nuhn - IPR2023-01161
Page 4 of 9

Content (MC) are the most important properties of dairy manure in terms of transportation (Schofild, 1984).

The density of raw SLDM collected by a tractor from the floor of platform was1177kg/m^3. The main challenge in using sand as bedding material is in its physical properties. Sand density is between 1750 and 2100 kg/m^3, depending on ambient humidity. Sand absorbs no water; therefore, it increases the mixture's volume while reducing its MC (increases TS% of the mixtuer). As a result, SLDM is heavier, denser, and drier than manures with organic substances (Gooch & Wedel, 2013). Therefore, according to Equation 4, there was about 36% sand in the manure. Given the mixture's density relation, higher mass percent of heavy bedding materials (such as sand) renders the manure denser. This is the reason why the calculated densities did not conform to ASAE D384.1 standard (1997) for manure slurry and those from other studies (El-Mashad*et al.*, 2005; Chen, 2005) and were larger.

The effect of concentration (TS%) on slurry manure density was modeled as following Equation 12 based on Figure 2:

$$\rho=6.069\ TS + 1005 R^2= 0.997 \quad (12)$$

Figure 2 The effect of concentration (TS%) on slurry manure density

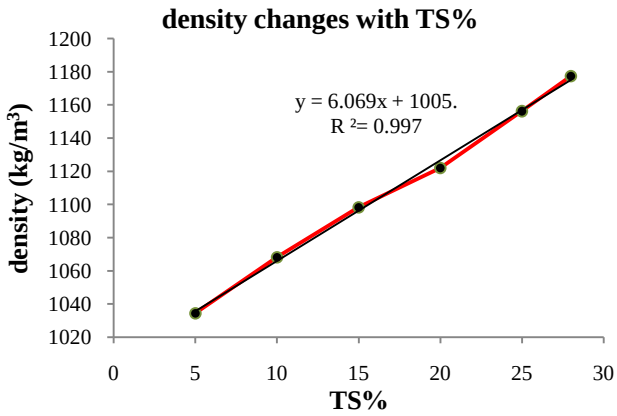

Figure 3-A up to 3-D present the shear stress-shear rate relationship for four manures at five temperature levels. The empirical data were properly fitted using the power law model. Table 2 presents the values determined for consistency index (K) and flow index (n) in the power law model at various temperatures, with R^2 for each equation. Hashimito and Chen (1976) used power law on rheological behavior of dairy manure and reported its efficiency. As shown, at a constant shear rate, shear stress is higher at lower temperatures.

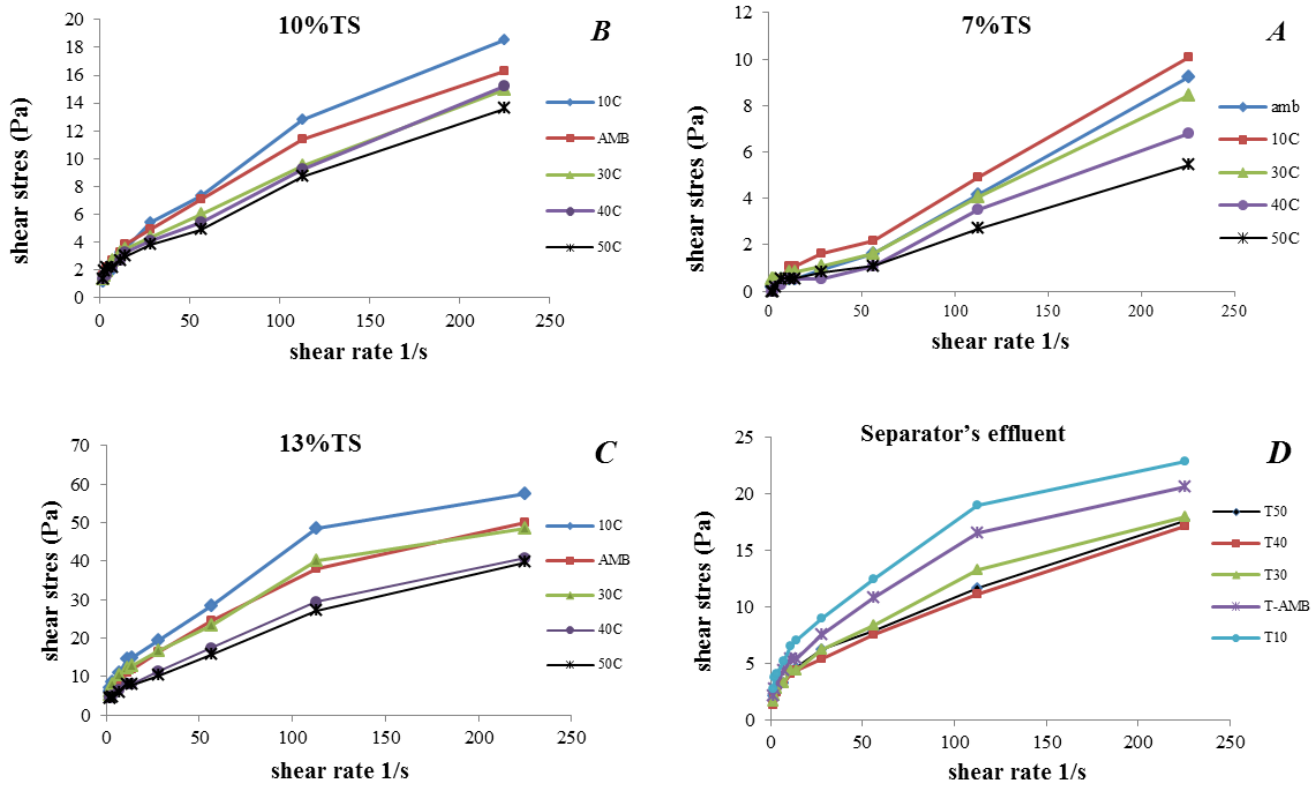

Figure 3 Relation between shear stress and shear rate at various temperatures for 7, 10, 13% TS and separator's effluent manure

Table 2 Calculated parameters for power law at various temperatures, and solid concentrations

Temperature , C	7%TS , starting from 8r/min			10%TS			13%TS			Separator effluent		
	K	n	R^2	K	n	R^2	K	n	R^2	K	n	R^2
10	0.172	0.704	0.958	0.809	0.567	0.982	4.684	0.462	0.99	2.347	0.422	0.989
21	0.094	0.776	0.93	1.118	0.476	0.989	3.257	0.504	0.997	1.765	0.456	0.994
30	0.159	0.665	0.921	1.052	0.463	0.988	4.219	0.446	0.989	1.36	0.469	0.991
40	0.051	0.856	0.945	0.94	0.475	0.975	2.795	0.466	0.971	1.273	0.464	0.982
50	0.081	0.735	0.939	1.089	0.421	0.947	2.704	0.462	0.964	1.543	0.428	0.99

According to Figure 3, increasing TS% (manure concentration) increases the curvature of diagrams, decreases *n*, and increases R^2. That is, the manure slurry showed a non-Newtonian behavior or, in other words, a more accurate behavior and an increased conformity power law than the shear-thinning fluid (pseudo-plastic). For shear-thinning fluids, apparent viscosity decreases as the shear rate increases and, therefore, are named accordingly. When such liquids are subjected to shearing, the particles distributed within them are accidentally aligned with the flow direction. Similarly, colloid particles are able to change shape and be drawn to the flow direction, which increases their fluidity (Singh and Heldman, 2008). Results of the present study support those of the reviewed studies on this topic; provided that dairy manure slurries (beef cattle) with 1% to 19% TS perform as shear-thinning fluids (Chen, 1982; Chen and Shetler, 1983; Achkari-Begdouri and Goodrich, 1992; El-Mashad*et al.*, 2005). El-Mashad*et al*. (2005) reported that the "shear stress-strain rate" curve for dairy manure slurry with 10% TS at shear rates higher than 50 1/s is a straight line. Therefore, its behavior is real plastic and is a behavior between shear-thinning fluids and Bingham plastic. In fact, this model may perform improperly at low TS%, as the results showed zero shear stress at zero shear rates. Also, no shear stress is observed at low concentrations.

Liquid manures were obtained through a screw-press separator with 1 mm sieve size. According to Figure 3D, although its TS% is about 10.9%, the consistency index, *K*, is higher compared to 10% manures; therefore, its apparent viscosity is larger. It is mainly due to more volatile solids and larger outer surface than large undigested fiber pieces. Meanwhile, separator's effluent has more uniform curves and the power law better explains its non-Newtonian behavior compared to other concentrations since *n* is smaller. The reason for non-uniformity among the curves was the presence of large fiber pieces inside manure slurries, since, considering the geometry of concentric cylinder rheometers, presence of large fiber pieces caused dynamic errors and incorrect reading. The amount of fiber in the ration and particles size distribution of the feed significantly affected the rheological behavior of dairy manures (Schofield, 1984). Bashford *et al.* (1977) found that, at similar TS percents, non-separated dairy manure has a lower viscosity than manures with removed particles larger than 500 microns. Moreover, the equivalent height of pressure loss when pumping raw manure is half that of the screened manure.

As shown in Figure 3A, it is obvious for 7% thin manures that the stress-shear rate curve is near-linear; i.e., gradient of the curve indicates the viscosity of a Newtonian fluid. Additionally, *n* is larger than 0.7 and shear stress is zero at low rate. Thus, the fitted curve was a straight line with high R^2. Therefore, *K* and *n* values related to shear rates higher than 8 rpm are listed, as the device senses no shear stress at lower shear rates. For 10% TS, R^2 of the linear model was almost similar to that of the power law model. It is suggested that manures with TS lower than 5% exhibit Newtonian behavior and as TS% increases, deviation from this

behavior increases with TS% (Kumar *et al.*, 1972). However, it is possible to consider SLDM slurries with 10% TS as Newtonian fluids, in this study.

Apparent viscosities in this study were smaller than those of other studies (Landry *et al.*, 2004; El-Mashad*et al.*, 2005). Using exponential models, Landry *et al.* (2004) modeled the relationship between apparent viscosity and TS% for slurry and semi-solid dairy cattle manure, poultry, sheep, and pig manures, at shear rates near 10 1/s and TS range of 10 to 25%. For dairy manure, this relationship was $\eta_{ap} = 4E-5 \times TS^{4.4671}$. For example, at room temperature for 10% TS, the power law fluid model (Table 2) had a viscosity of 0.3345 Pa.s while it was 1.17 for the Landry model. For 10% TS, the measured apparent viscosity was almost similar to that from El-Mashad*et al.* (2005). This is due to the high amount of bedding materials and sand in the manure.

There are two reasons for the fact that less sand results in decreased viscosity. First, based on the mixture's density equation, high levels of sand (36%) would present unreal TS% for manures (which is higher than the manure's pure slurry). Second, sand is one of the mineral solids of manure, which absorbs no water and induces no adhesion, which, in turn, reduces the share of the manure's volatile solids when deposited. This, therefore, results in thin manure, as during the experiments, deposition of sand particles at the bottom of the rheometer cup was obvious.

3.2 Effect of temperature on apparent viscosity

The rheological properties of dairy manures affect in manure handling and pumping, mixing, and separation processes. Most of these processes usually take place under turbulent flow conditions, at a shear rate of about 100 1/s for food processing (Singh and Heldman, 2008). Therefore, three different shear rates (56, 112, and 225 1/s) were used to describe the dependence of apparent viscosity on temperature. Figure 4 presents the curves from the Arrhenius model at various shear rates. Table 3 lists the equivalent values of E_a and μ_∞ for three manure slurry concentrations and separator's effluent.

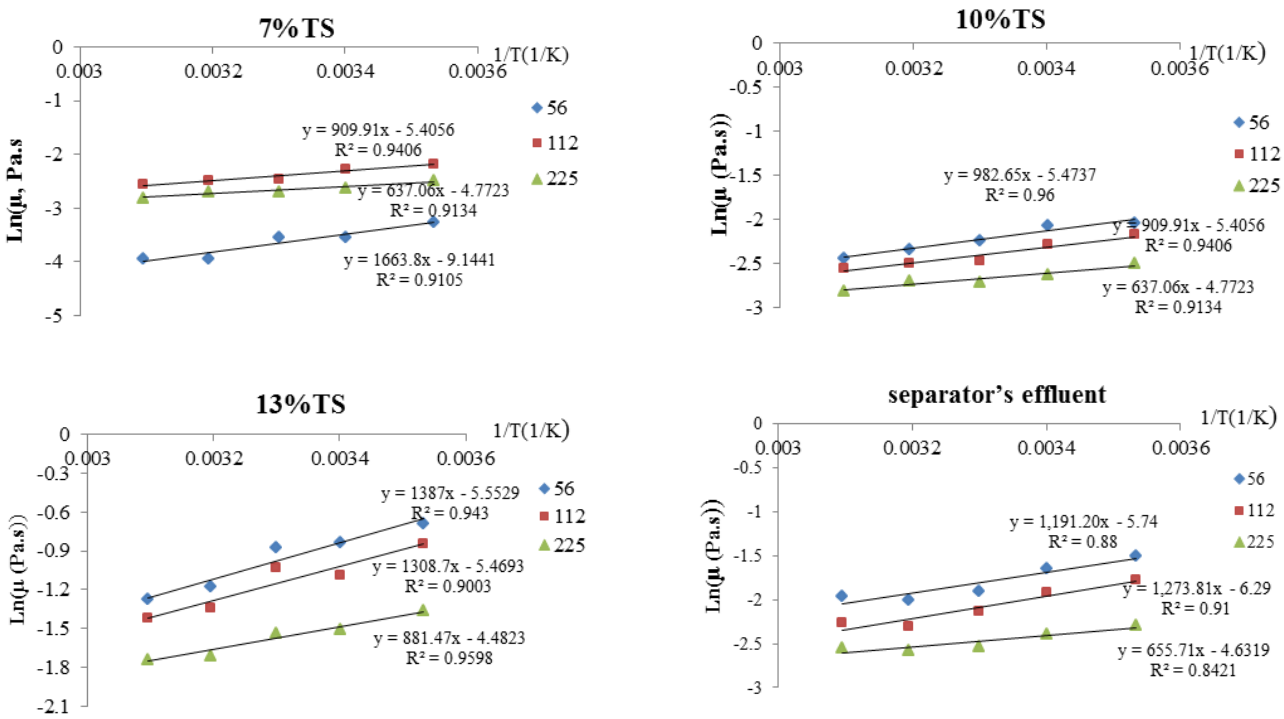

Figure 4 Arrhenius plots for SLDM and separator's effluent at different shear rates of: 56, 112 and 225 1/s

Table 3 E_a and μ_∞ for four types of manure slurry (Arrhenius plots)

Shear rate, 1/s	Separator's effluent		7%TS		10%TS		13%TS	
	Ea, J/Jmol^{-1}	μ_∞ (Pas)	Ea, J / mol^{-1})	μ_∞ (Pas)	Ea(J/mol^{-1})	μ_∞ (Pas)	Ea(J/mol^{-1})	μ_∞ (Pas)
56.32	9903.637	0.00321	13826.18	0.00011	8169.336	0.00420	11531.52	0.00388
112.64	10590.37	0.00185	7564.909	0.00449	7564.909	0.00449	10874.71	0.00381
225.28	5451.49	0.00975	5296.018	0.00846	5296.018	0.00846	7327.96	0.01131

Base on R^2 values, the Arrhenius model better explains the effect of temperature on viscosity. High activation energy indicates the strong sensitivity of viscosity to temperature. The activation energy values for three concentrations of 7, 10, and 13% and for the liquid manure from the separator were 8.90±4.42, 7.01±1.51, 9.91±2.26, and 8.65±2.79 KJ/mol, respectively. These figures are smaller than those reported by El-Mashad*et al.* (2005) (17.0±0.3 KJ/mol) and Chen (1986) (18±5 KJ/mol). These differences imply that the tested manure is less affected by temperature, which is the result of differences in physical and chemical properties of tested manures; because sand in SLDM reduces resistance against the flow of its particles, which, in turn, affects in activation energy.

At a fixed shear rate, E_a increases as the concentration (TS%) increases; i.e., the viscosity of thicker slurries is more influenced by temperature. For the liquid manure from separator, E_a is a value between 10% TS and 13% TS. Gilbertson &Nienaber (1974) found that increasing TS% intensifies the effect of temperature on viscosity dairy manures. Generally, it seems that the effects of temperature, under field conditions at temperatures between 10˚C to 30˚C, on viscosity are small (Schofield, 1984).

3.3 Modeling

Viscosity and rheological properties of dairy cattle manure are affected by concentration, temperature, and shear rate. Nonlinear fitting of Equation 13, was carried out well with the SPSS 18 software and constants of this model were obtained as follows:

$$\tau = 10.3e^{\left(\frac{1084.2}{T}\right)}e^{(-0.006\ \mathrm{M.C.})}\dot{\gamma}^{0.373}\ R^2 = 0.964 \quad (13)$$

This simple model can be used for predicting viscosity as a function of the three variables.

4 Conclusions

Rheological properties of the sand-laden dairy manure (SLDM) including percentage of total solids (TS%), density and apparent viscosity at shear rates of 1.76 to 225.28 1/s were measured. Equation $M_s = 2.3 - 2279.6/\rho_s$ was obtained to estimate the mass fraction of sand. Thus, according to this equation, there was about 36% sand in the manure. The results of this study support those of the reviewed studies that dairy manure slurries with 1% to 19% TS perform as shear-thinning fluids. Although theapparent viscosities obtained in this study were smaller than those of other studies for pure slurries (about 1/3), since sand absorbed no water and induced no adhesion. Separator's effluent has a larger apparent viscosity compared to 10% TS manures due to more volatile solids. The activation energy values for three concentrations of 7%, 10%, and 13% ranged from 7.01 to 9.91 KJ/mol which are smaller than those reported by researchers (17.0 to 18.0 KJ/mol). This implies that the SLDM is less affected by temperature. The effects of temperature and moisture content and shear rate on apparent viscosity are well represented by an exponential model (R^2=0.964).

Acknowledgment

The authors thank the College of Textiles at the Isfahan University of Technology for perform the experiments in Color Lab. The author also appreciates the technical assistance of Mohammad Ali Alsharif for conducting the experiment.

References

Achkari-Begdouri, A., and P. R. Goodrich. 1992. Bulk density and thermal properties of moroccan dairy cattle manure. *Bioresource Technology*, 40: 225–233.

Ontario Ministry of Agriculture, Food and Rural Affairs. 2013. Sand-Laden Manure Handling and Storage. Available at: www.omafra.gov.on.ca/english/engineer/facts/10-007.htm.

ASAE. 1997. Manure Production and Characteristics, Data Sheet ASAE D384.1 DEC98 in ASAE Standards.St. Joseph, Mich.: ASAE.

Astolfi-Filho, Z., V. R. N. Telis, E. B. de Oliveira, J. S. dos Reis Coimbra, and J. Telis-Romero. 2011. Rheology and fluid dynamics properties of sugarcane juice. *Biochemical Engineering*, 53: 260–265.

Bashford, L. L., C. B. Gilbertson, J. A. Nienaber, and D. Tietz. 1977. effects of ration roughage content on viscosityand theoretical head losses in pipe flow for beef cattle slurry. *Transactions of the ASAE*, 20 (6): 1106-1109.

Chen, Y. R., and A. G. Hashimoto. 1976. Pipeline transport of livestock waste slurries. *Transactions of the ASAE*, 19 (1): 128-133.

Chen, Y. R. 1986. Rheological properties of sieved beef-cattle manure slurry: rheological model and effects of temperature and solids concentration. *Agricultural Wastes*,15: 17-33.

Chen, Y. R. 1982. Engineering properties of beef cattle manure. *ASAE* Paper No.824085. St.Joseph, MI.

Chen, Y. R., and E. L. Shetler. 1983. Temperature effect on rheological properties of cattlemanure slurry. *Testing and Evaluation*, 11(6): 360-364.

El-Mashad, H. M., W.K.P. van Loon, G. Zeeman, and G. P. A. Bot. 2005. Rheological properties of dairy cattle manure. *Bioresource Technology*. 96: 531–535.

Ghafooria, E., P. C. Flynna, and J. J. Feddesb. 2007. Pipeline vs. truck transport of beef cattle manure. *Biomass and Bioenergy*, 31: 168–175.

Ford, M., and R. Fleming. 2002. Mechanical solid-liquid separation of livestock manure. literature review. Report prepared for Ontario Pork. Guelph, Ont. University of Guelph. Availableat: mie.esab.upc.es/ms/informacio/residus... /Separator%20manure.pdf.

Gilbertson, C. B., and J. A. Nienaber. 1974. The effect of ration on material handling and processing methods of beef cattle manure, processing and management of agricultural waste. *Proc. Cornell Agric. Waste Management conference*.

Gooch, C., A. Wedel. 2013. Handling sand-laden dairy manure from barn to storage. Available at: www.ansci.cornell.edu/pdfs/sand.pdf.

Hashimoto, A. G., and Y. R. Chen. 1976. Rheology of livestock waste slurries. *Transactions of the ASAE*, 19 (1): 930–934.

Haward, B. 1979. Pressure losses in pipes transporting manure. *Agricultural Wastes*, 1(1): 11-21.

Kumar, M., H. D. Bartlett, and N. N. Mohsenin. 1972. Flow properties ofanimal slurries. *Transactions of the ASAE*, 15 (4): 718–722.

Landry, H., C. Laguë, M. Roberge, and J. Agnew. 2005. Systems engineering for handling and land application of solid and semi-solid livestock manure. Report prepared for Alberta Agricultural Research Institute (AARI). University of Saskatchewan, Canada. Availableat: www.cpc-ccp.com/documents/Lague_LEI_Final.pdf.

Moeller, G., and L. G. Torres. 1997. Rheological characterization of primary and secondary sludges treated by both aerobic and anaerobic digestion. *Bioresource Technology*, 61: 207–211.

Rauwendaal, C. 2001. *Polymer Extrusion*. 4rd edn. New York, USA:Hanser Gardner Press.

Schmidt, G. H., L. D. Van Vleck, and M. F. Hutjens. 1988. *Principles of dairy science*. 2 edn. New Jersey, USA: Prentice Hall.

Schofield, C. P. 1984. A Review of The Handling Characteristics of Agricultural Slurries. *Journal of Agricultural Engineering Research*, 30: 101-109.

Singh, R. P., and D. R. Heldman. 2008. *Introduction to Food Engineering*, 4rd edn. New Jersey, U.S.A: Academic Press.

Stroshine, R., and D. Hamann. 1994. *Physical Properties of Agricultural Materials and Food Products*. USA: R. Stroshine.

Telis-Romero, J., C.E.P. Thomaz, M. Bernardi, V.R.N. Telis, and A.L. Gabas. 2006. Rheological properties and fluid dynamics of egg yolk. *Food Engineering*, 74:191–197.

Zadhoush, A., M. A. Alsharif, M. R.Moghareh-Abed, and M. Haghighat. 2007. The temperature dependent rheological behaviors of plastisols used in coated fabrics. *Iranian Polymer Journal*, 16 (11): 753-758.