UNITED STATES PATENT AND TRADEMARK OFFICE

BEFORE THE PATENT TRIAL AND APPEAL BOARD

Verizon Connect Inc.,
Petitioner

v.

Omega Patents, LLC,
Patent Owner

Case No.: To Be Assigned
Patent No.: 8,032,278

Filing Date: July 3, 2007
Issue Date: October 4, 2011

Title: VEHICLE TRACKING UNIT WITH DOWNLOADABLE CODES AND ASSOCIATED METHODS

DECLARATION OF DR. AZIM ESKANDARIAN

TABLE OF CONTENTS

I. PERSONAL AND PROFESSIONAL BACKGROUND 4

II. MATERIALS REVIEWED AND CONSIDERED 8

III. MY UNDERSTANDING OF CERTAIN PATENT LAW PRINCIPLES 8

A. Anticipation 9

B. Obviousness 10

C. Claim Construction 14

D. Priority Date 14

IV. PERSON HAVING ORDINARY SKILL IN THE ART 15

V. SUMMARY OF THE ’278 PATENT 17

A. Challenged Claims 17

B. Description of the Claimed Invention 23

VI. PRIORITY DATE OF THE ’278 PATENT 25

VII. CLAIM CONSTRUCTION 26

VIII. GROUNDS FOR REJECTION OF CLAIMS 27

A. Ground 1 – Flick ’885 Patent + Flick ’561 Patent 27

1. Description of Flick ’885 Patent 27

2. The Disclosures from the ’885 Patent Appear in the ’278 Patent. 30

3. Description of Flick ’561 Patent 31

4. Motivation to Combine Flick ’885 Patent and Flick ’561 Patent 32

5. Claim Chart 33

B. Ground 2 – Lewis (Claims 1-6, 8, 10-14, 16, 18-19, 21); Lewis + Underdahl (Claims 7, 9, 15, 17, 20, and 22) 59

1. Description of Lewis 59

2. Description of Underdahl 60

3. Motivation to Combine Lewis and Underdahl 61

4. Claim Chart 62

IX. CONCLUSION 81

EXHIBIT LIST

Exhibit	Description
1001	U.S. Patent No. 8,032,278 to Flick
1002	Declaration of Azim Eskandarian
1003	U.S. Patent No. 6,756,885 to Flick
1004	U.S. Patent No. 6,606,561 to Flick
1005	U.S. Patent Application Publication No. 2006/0161315 to Lewis
1006	U.S. Patent Application Publication No. 2003/0182003 to Underdahl
1007	U.S. Patent No. 6,011,460 to Flick
1008	U.S. Patent No. 6,812,829 to Flick
1009	File History of Application No. 11/773,272, which issued as U.S. Patent No. 8,032,278 to Flick
1010	03-25-2021 Order Granting the Reexamination (Appl. No. 90/014,675)
1011	06-21-2021 Examiner's Non-Final Office Action (Appl. No. 90/014,675)
1012	08-21-2021 Declaration of Joseph C. McAlexander III
1013	08-23-2021 Response to Non-Final Office Action (Appl. No. 90/014,675)
1014	04-01-2022 Patent Owner's Appeal Brief (Appl. No. 90/014,675)
1015	12-01-2022 Decision on Appeal (Appl. No. 90/014,675)
1016	Application No. 11/076,259 to Flick
1017	Application No. 10/383,496 to Flick
1018	Application No. 09/859,972 to Flick
1019	Application No. 60/264,811 to Flick
1020	Application No. 60/258,005 to Flick
1021	Application No. 60/251,552 to Flick
1022	Application No. 60/252,125 to Flick
1023	Application No. 60/236,890 to Flick
1024	Application No. 60/246,463 to Flick
1025	Application No. 60/222,777 to Flick
1026	Application No. 60/205,178 to Flick

1027	10-03-2014 Plaintiff's Opposition to CalAmp's Motion for Claim Construction, 6:13-cv-1950-ORL-40-DAB
1028	02-20-2015 Order on Claim Construction, 6:13-cv-1950-ORL-40-DAB
1029	*In Ex Parte A. James Smith, Jr.,* 2010 WL 3269939 (BPAI August 17, 2010)

I, Azim Eskandarian, declare:

1. I have been retained by Maynard Nexsen LLP, counsel for Verizon Connect Inc. ("Petitioner"), to analyze Claims 1-22 ("the challenged claims") of U.S Patent No. 8,032,278 in light of various prior art references and my knowledge and experience in connection with a Petition for *Inter Partes* Review of Claims 1-22 of the '278 Patent. I am being compensated for my time working on this matter. My compensation is not dependent in any way upon the outcome of the Petition. I hold no financial interest in the Petitioner or the Patent Owner.

I. PERSONAL AND PROFESSIONAL BACKGROUND

2. I am a Professor and Head of the Mechanical Engineering Department at Virginia Polytechnic Institute and State University ("Virginia Tech"). At Virginia Tech, I was named the Nicholas and Rebecca Des Champs Chair in Mechanical Engineering and established the Autonomous Systems and Intelligent Machines laboratory. My current *curriculum vitae* is attached as Appendix A, with some highlights as follows.

3. I received a Bachelor of Science (B.S.) in 1982 from George Washington University, a Master of Science (M.S.) in 1983 from Virginia Tech, and a Doctor of Science (D.Sc.) in 1991 from George Washington University, all in mechanical engineering.

4. I was an engineer and project manager from 1983 to 1989 before becoming an Assistant Professor in Mechanical Engineering at Pennsylvania State University in 1989. I began a long and successful career at George Washington University in 1993 when I become a Professor of Engineering and Applied Science. At George Washington University, I was the Founding Director of the Center for Intelligent Systems Research from 1996 to 2015, the Director of the Transportation Safety and Security University Area of Excellence from 2002 to 2015, the Co-Founder of the National Crash Analysis Center in 1992, and later the Director of the National Crash Analysis Center from 1998 to 2002 and 2013 to 2015.

5. As a professor at George Washington University, I taught graduate level courses on Vehicle Dynamics, Intelligent Transportation Systems, Intelligent Systems Theory and Applications, Analytical Mechanics: Dynamics, and System Dynamics Modeling and Control, among others. I have also directed doctoral dissertations covering connected vehicles and cooperative autonomous vehicle safety.

6. In addition, I developed a number of laboratories, including the Vehicle Driving Simulator Laboratory, Traffic and Networks Laboratory, Vehicle Modeling Laboratory, Truck Driving Simulator, Mobile Robotics Lab, and High Performance and Parallel Computing Laboratory. Through these

laboratories, I researched and simulated connected vehicles, collision avoidance, monitoring and data acquisition systems in vehicles, sensor integration for network monitoring and controls, and vehicle structure and mechanical components, among a number of other automotive engineering topics.

7. My research portfolio includes over $28.6 million in funding from government and industry entities such as the Department of Transportation, General Motors, and Ford Motor Co. I have pioneered research in autonomous vehicles, advanced driver assistance systems, human/driver cognition, and robotics. For example, the Department of Transportation sponsored a nearly $1.5 million research project from 199-2004 in which I researched vehicle controls, driver assistance, collision avoidance, and inter-vehicular and vehicle-infrastructure networks.

8. I have also served as an editor for the following journals: IEEE Intelligent Transportation Systems Transactions (Editor-in-Chief, 2019-present; Senior Editor, 2017-2018; Associate Editor, 2004-2016); ASME Journal of Dynamic Systems, Measurement, and Control (Associate Editor, 2016-2018); International Journal of Automotive Technology (Associate Editor, 2003-2016); Journal of Multi-body Dynamics of Institution of Mechanical Engineers (Editorial Board, 2000-2015); International Journal of Vehicle

Autonomous Systems (Editorial Board, 2005-2015); International Journal of Vehicle Information and Communication Systems Editorial Board, 2005-2014).

9. My 39 years of academic and engineering experience in dynamics and control, intelligent systems, and applied mechanics, with applications in intelligent vehicles, vehicle dynamics and control, and automotive safety, has given me a detailed appreciation of the technology involved with the ’278 Patent.

10. In writing this Declaration, I have considered the following: my own knowledge and experience, including my work experience in the above fields; my experience in teaching those subjects; and my experience in working with others involved in those fields. In addition, I have analyzed the publications and materials described in Section II of this declaration, as well as the other materials I cite in my declaration.

11. I have no financial interest in either party or in the outcome of this proceeding. I am being compensated for my work as an expert on an hourly basis, for all tasks involved.

12. My opinions, as explained below, are based on my education, experience, and background in the fields discussed above. Unless otherwise stated, my testimony below refers to the knowledge of a POSITA in the fields as of the time of the invention of the ’278 Patent.

II. MATERIALS REVIEWED AND CONSIDERED

13. My findings contained in this declaration are based on my education, research, experience, and background in the field of automotive engineering, and specifically, to the fields of intelligent vehicles, vehicle dynamics and control, and automotive safety, as well as my investigation and study of prior art references and other documents disclosed in this declaration. In forming my opinions, I have studied and considered the documents identified in the Exhibit List contained in this declaration on page ii after the Table of Contents.

III. MY UNDERSTANDING OF CERTAIN PATENT LAW PRINCIPLES

14. I am not an attorney, and therefore my understanding of the legal standards throughout this section are based on discussion with Petitioner's attorneys and experience in prior patent cases.

15. I understand that, in this proceeding, Petitioner has the burden of proving that the challenged claims of the '278 Patent are unpatentable by a preponderance of the evidence. I understand that "preponderance of the evidence" means that a fact or conclusion is more likely true than not true.

16. I understand that for an invention claimed in a patent to be patentable, it must be, among other things, new (novel) and not obvious from the prior art to a

person of ordinary skill in the art ("POSITA") at the time the invention allegedly was made.

17. I understand the information that is used to evaluate whether a claimed invention is patentable is generally referred to as "prior art" and includes patents and printed publications (e.g., books, journal publications, articles on websites, product manuals, etc.).

18. I understand that there are two ways in which prior art may render a patent claim unpatentable. First, I understand that prior art may "anticipate" the claim. Second, I understand the prior art may have made the claim "obvious" to a POSITA at the time the invention was made. My understanding of the two legal standards is set forth below.

19. I understand that "*inter partes* review" is a proceeding before the United States Patent & Trademark Office ("Patent Office") for evaluating the patentability of an issued patent claim based on prior art patents and printed publications. I understand that, during an *inter partes* review, claims in a patent are construed in the same way they would be construed in a litigation proceeding in federal district court.

A. Anticipation

20. I understand that the following standards govern the determination of whether a patent claim is "anticipated" by the prior art.

21. I understand that, for a patent claim to be "anticipated" by the prior art, each and every limitation of the claim must be found, expressly, implicitly or inherently, in a single prior art reference.

22. I understand that a claim limitation is implicit in a prior art reference if a person of ordinary skill understood the reference to disclose the limitation based on inferences that a person of ordinary skill would reasonably be expected to draw from the express teachings in the reference when read in light of the person of ordinary skill's knowledge and experience.

23. I understand that a claim limitation is inherent in a prior art reference if that limitation is necessarily present when practicing the teachings of the reference, regardless of whether a person of ordinary skill recognized the presence of that limitation in the prior art.

B. Obviousness

24. I understand that the following standards govern the determination of whether a patent claim would have been "obvious" in view of the prior art at the time the subject matter of the patent claim was said to have been invented.

25. I understand that a patent claim may be unpatentable if it would have been obvious in view of a single prior art reference or a combination of prior art references.

26. I understand that a patent claim would have been obvious if the differences between the subject matter of the claim and the prior art are such that the subject matter as a whole would have bene obvious to a person of ordinary skill in the relevant field at the time the alleged invention was made. Specifically, I understand that the obviousness question involves a consideration of:

- the scope and content of the prior art;
- the differences between the prior art and the claims at issue;
- the knowledge of a person of ordinary skill in the art in the pertinent art; and
- whatever objective factors indicating obviousness or non-obviousness may be present in any particular case, which I understand are referred to as "secondary considerations."

27. I understand that such secondary considerations include: (a) commercial success of a product due to the merits of the claimed invention; (b) a long-felt, but unmet need for the invention; (c) failure of others to find the solution provided by the claimed invention; (d) deliberate copying of the invention by others; (e) unexpected results achieved by the invention; (f) praise of the invention by others skilled in the art; (g) the taking of licenses under the patent by others; and (h) evidence that the patentee proceeded contrary to the

accepted wisdom of the prior art. I understand that secondary considerations are relevant where there is a connection, or nexus, between them and the claimed invention.

28. I understand that in order for a claimed invention to be considered obvious, a person of ordinary skill in the art must have had a reason for combining teachings from multiple prior art references (or for altering a single prior art reference, in the case of single-reference obviousness) in the fashion proposed.

29. I understand that in determining whether a prior art reference would have been combined with other prior art or with other information within the knowledge of a person of ordinary skill in the art, the following are examples of approaches and rationales that may be considered:

- combining prior art elements according to known methods to yield predictable results;
- simple substitution of one known element for another to obtain predictable results;
- use of a known technique to improve similar devices in the same way;
- applying a known technique to a known device ready for improvement to yield predictable results;

- applying a technique or approach that would have been "obvious to try," *i.e.*, choosing from a finite number of identified, predictable solutions, with a reasonable expectation of success;
- known work in one field of endeavor may prompt variations of it for use in either the same field or a different one based on design incentives or other market forces if the variations would have been predictable to one of ordinary skill in the art;
- numerical ranges disclosed in the prior art that overlap with numerical limitations set forth in the challenged claims;
- whether certain aspects of the patented subject matter were result-effective, such that a person of ordinary skill in the art would know that such element is determinative as to the effectiveness of the patent subject matter; and
- some teaching, suggestion, or motivation in the prior art that would have led one of ordinary skill to modify the prior art reference or to combine prior art reference teachings to arrive at the claimed invention. I understand that this teaching, suggestion, or motivation may come from the prior art reference or from the knowledge or common sense of one of ordinary skill in the art.

30. I understand that for a single reference or a combination of references to render the claimed invention obvious, a person of ordinary skill in the art must have bene able to arrive at the claims by altering or combining the applied references.

C. Claim Construction

31. I understand that the terms of the challenged claims must first be construed before they can be properly compared to the prior art references and before a patent owner's priority date claims can be evaluated.

32. I understand that in an *inter partes* review proceeding, the proper construction of the claims is typically the construction that most closely reflects the meaning of the claims as they would be understood by a person of skill in the art at the time of the invention in the context of the entire patent disclosure.

33. I further understand that in determining the meaning of claim limitations, one should look principally to the intrinsic evidence of record, focusing first on the claim language itself, the written description, and the prosecution history of the patent.

D. Priority Date

34. I understand that a provisional application must adequately describe the claimed invention in full, clear, concise, and exact terms to support a priority claim.

35. I also understand that the disclosure of the provisional application must reasonably convey to those skilled in the art that the inventor had possession of the claimed subject matter as of the filing date.

36. I further understand that all of the elements and limitations of the claimed invention must be described in the provisional application in order to show possession. I understand that this means that mere descriptions of individual elements do not suffice if the claimed invention as a whole is not adequately described.

37. I also understand that a provisional application must actually describe the claimed subject matter, and not merely contain a description that renders the invention obvious. Thus, even if it can be shown that the claimed subject matter would be rendered obvious by the disclosure in a provisional application, I understand that the provisional application cannot support a priority claim unless the claimed subject matter itself is described in full, clear, concise, and exact terms.

IV. PERSON HAVING ORDINARY SKILL IN THE ART

38. I am informed that prior art references should be understood from the perspective of a POSITA to which the patent is related, based on the understanding of that person at the time of the patent's priority date. I understand that a POSITA is presumed to be aware of all pertinent prior art

and the conventional wisdom in the art and is a person of ordinary creativity. I have applied this standard throughout my declaration.

39. In my opinion, a person of ordinary skill in the art of the ’278 Patent as of its filing date of July 3, 2007 would have been someone knowledgeable in mobile computing systems and location technology.

40. That person would have had either (1) a Bachelor of Science degree in Electrical Engineering, Mechanical Engineering, Automotive Engineering, Computer Engineering, or an equivalent field, with at least two years of academic or industry experience in the automotive industry; or (2) a Master of Science degree in Electrical Engineering, Mechanical Engineering, Automotive Engineering, Computer Engineering, or an equivalent field, with at least a year of academic or industry experience in the same field. With more education, for example, postgraduate degrees and/or study, less experience is needed to attain an ordinary level of skill in the art. Similarly, more experience can substitute for formal education.

41. My opinions regarding the level of ordinary skill in the art are based on, among other things, my years of experience in the field of the ’278 Patent and automotive engineering as described above, my understanding of the basic qualifications that would be relevant to an engineer or scientist tasked with

investigating systems in the relevant area, and my familiarity with the backgrounds of colleagues and co-workers, both past and present.

42. I am familiar with the knowledge and capabilities of a POSITA as noted above. Specifically, my experience working with industry, undergraduate and post-graduate students, colleagues from academia, and designers and engineers practicing in the industry has allowed me to become directly and personally familiar with the level of skill of individuals and the general state of the art.

43. My opinions set forth herein are from the perspective of a person of ordinary skill in the art, as explained above.

V. SUMMARY OF THE '278 PATENT

A. Challenged Claims

44. The '278 Patent has 22 claims, of which claims 1, 13 and 18 are independent. I understand that all 22 claims are challenged in this petition. The challenged claims are reproduced below:

1. A multi-vehicle compatible tracking unit for a vehicle comprising a vehicle data bus extending throughout the vehicle, the multi-vehicle compatible tracking unit comprising:
   (a) a vehicle position determining device;
   (b) a wireless communications device;

(c) a multi-vehicle compatible controller for cooperating with said vehicle position determining device and said wireless communications device to send vehicle position information;

(d) said multi-vehicle compatible controller to be coupled to the vehicle data bus for communication thereover with at least one vehicle device using at least one corresponding vehicle device code from among a plurality thereof for different vehicles; and

(e) a downloading interface for permitting downloading of enabling data related to the at least one corresponding vehicle device code for use by said multi-vehicle compatible controller.

2. The multi-vehicle compatible tracking unit according to claim 1 wherein said downloading interface comprises a wired signal downloading interface.

3. The multi-vehicle compatible tracking unit according to claim 2 wherein said wired signal downloading interface comprises a connector for temporary connection to a downloading device.

4. The multi-vehicle compatible tracking unit according to claim 1 wherein said downloading interface comprises a wireless signal downloading interface.

5. The multi-vehicle compatible tracking unit according to claim 4 wherein said wireless signal downloading interface comprises a wireless receiver for temporary connection to a downloading device.

6. The multi-vehicle compatible tracking unit according to claim 1 wherein the corresponding at least one vehicle code is for reading from the at least one vehicle device.

7. The multi-vehicle compatible tracking unit according to claim 1 wherein the corresponding at least one vehicle code is for writing to the at least one vehicle device.
8. The multi-vehicle compatible tracking unit according to claim 1 wherein said downloading interface is also for permitting downloading of at least one programming instruction for said multi-vehicle compatible controller.
9. The multi-vehicle compatible tracking unit according to claim 1 further comprising a remote transmitter; and wherein said multi-vehicle compatible controller also performs at least one vehicle remote control function responsive to said remote transmitter.
10. The multi-vehicle compatible tracking unit according to claim 9 wherein the at least one vehicle remote control function comprises at least one of a vehicle security function, a remote keyless entry function, and a remote engine starting function.
11. The multi-vehicle compatible tracking unit according to claim 1 wherein said wireless position determining device comprises a Global Positioning System (GPS) receiver.
12. The multi-vehicle compatible tracking unit according to claim 1 further comprising a housing containing said vehicle position determining device, said wireless communications device, said multi-vehicle compatible controller, and said downloading interface.
13. A multi-vehicle compatible tracking unit for a vehicle comprising a vehicle data bus extending throughout the vehicle, the multi-vehicle compatible vehicle tracking unit comprising:
    (a) a vehicle position determining device;
    (b) a wireless communications device;

(c) a multi-vehicle compatible controller for cooperating with said vehicle position determining device and said wireless communications device to send vehicle position information;

(d) said multi-vehicle compatible controller to be coupled to the vehicle data bus for communication thereover with at least one vehicle device using at least one corresponding vehicle device code from among a plurality thereof for different vehicles; and

(e) a downloading interface for permitting downloading of enabling data related to the at least one corresponding vehicle device code for use by said multi-vehicle compatible controller;

(f) said downloading interface comprising a connector for temporary connection to a downloading device.

14. The multi-vehicle compatible tracking unit according to claim 13 wherein the corresponding at least one vehicle code is for reading from the at least one vehicle device.

15. The multi-vehicle compatible tracking unit according to claim 13 wherein the corresponding at least one vehicle code is for writing to the at least one vehicle device.

16. The multi-vehicle compatible tracking unit according to claim 13 wherein said downloading interface is also for permitting downloading of at least one programming instruction for said multi-vehicle compatible controller.

17. The multi-vehicle compatible tracking unit according to claim 13 further comprising a remote transmitter; and wherein said multi-vehicle compatible controller also performs at least one vehicle remote control function responsive to said remote transmitter.

18. A multi-vehicle compatible tracking unit for a vehicle comprising a vehicle data bus extending throughout the vehicle, the multi-vehicle compatible vehicle tracking unit comprising:
    (a) a vehicle position determining device;
    (b) a wireless communications device;
    (c) a multi-vehicle compatible controller for cooperating with said vehicle position determining device and said wireless communications device to send vehicle position information;
    (d) said multi-vehicle compatible controller to be coupled to the vehicle data bus for communication thereover with at least one vehicle device using at least one corresponding vehicle device code from among a plurality thereof for different vehicles;
    (e) a downloading interface for permitting downloading of enabling data related to the at least one corresponding vehicle device code for use by said multi-vehicle compatible controller; and
    (f) said downloading interface comprising a wireless receiver for temporary connection to a downloading device.
19. The multi-vehicle compatible tracking unit according to claim 18 wherein the corresponding at least one vehicle code is for reading from the at least one vehicle device.
20. The multi-vehicle compatible tracking unit according to claim 18 wherein the corresponding at least one vehicle code is for writing to the at least one vehicle device.
21. The multi-vehicle compatible tracking unit according to claim 18 wherein said downloading interface is also for permitting

downloading of at least one programming instruction for said multi-vehicle compatible controller.

22. The multi-vehicle compatible tracking unit according to claim 18 further comprising a remote transmitter; and wherein said multi-vehicle compatible controller also performs at least one vehicle remote control function responsive to said remote transmitter.

45. Claim 13 includes every element of Claim 1 and adds the element of the "downloading interface comprising a connector for temporary connection to a downloading device." Claim 18 includes every element of Claim 1 and adds the element of the "downloading interface comprising a wireless receiver for temporary connection to a downloading device."

46. Claim 2 add the limitation that the downloading interface is a wired signal downloading interface, and Claim 3 adds another limitation that the wired signal downloading interface is a connector for temporary connection to a downloading device. Claim 4 adds the limitation that the downloading interface is a wireless signal downloading interface, and Claim 5 adds another limitation that the wireless downloading interface is a wireless receiver for temporary connection to a downloading device.

47. Claims 6, 14, and 19 add the limitation where the corresponding vehicle device code is for reading from a vehicle device. Conversely, Claims 7, 15,

and 20 add the limitation where the corresponding vehicle device code is for writing to a vehicle device.

48. Claims 8, 16, and 21 add the limitation where the downloading interface permits downloading of "at least one programing instruction" for the multi-vehicle compatible controller.

49. Claims 9, 17, and 22 add the limitation where the multi-vehicle compatible controller performs a "vehicle remote control function" responsive to a remote transmitter. Claim 10 adds another limitation specifying that the vehicle remote control function is vehicle security function, a remote keyless entry function, or a remote engine starting function.

50. Claim 11 adds the limitation specifying that the wireless position determining device is a Global Positioning System (GPS) receiver.

51. Claim 12 adds the limitation where the vehicle position determining device, the wireless communications device, the multi-vehicle compatible controller, and the downloading interface are contained in a housing.

B. Description of the Claimed Invention

52. The '278 Patent is directed to a multi-vehicle compatible tracking unit comprising four components: (1) a multi-vehicle compatible controller ("MVCC"); (2) a downloading interface; (3) a wireless communications device; and (4) a vehicle tracking device. Ex. 1001, 2:54-58. The MVCC is

designed to be coupled to the vehicle data bus for communicating with one or more vehicle devices of different vehicles. Ex. 1001, 2:59-63. The MVCC also uses enabling data downloaded from the downloading interface and cooperates with the wireless communications device and vehicle tracking device. Ex. 1001, 2:54-58.

53. The vehicle unit of the ’278 Patent includes a vehicle position determining device which may be provided by a GPS receiver or other types of satellite or cellular transmissions, including through time of arrival techniques. Ex. 1001, 5:20-26.

54. Figure 10 is illustrative of the claimed invention of the ’278 Patent:

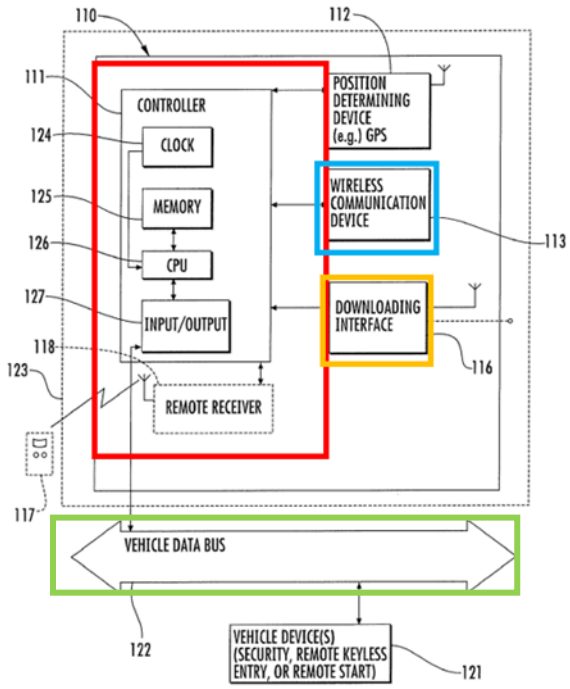

FIG. 10

VI. PRIORITY DATE OF THE ’278 PATENT

55. I understand that the ’278 Patent is a continuation-in-part application of Ser. No. 11/076,259 filed on March 9, 2005 (Ex. 1015), which claims priority to a continuation Ser. No. 10/383,496 filed on March 7, 2003 (Ex. 1016), which claims priority to a continuation Ser. No. 09/859,972 filed on May 17, 2001 (Ex. 1017). I also understand that the ’278 Patent claims priority to Provisional Application No. 60/264,811 filed on January 29, 2001 (Ex. 1018); Application No. 60/258,005 filed on December 22, 2000 (Ex. 1019); Application No. 60/251,552 filed on December 6, 2000 (Ex. 1020); Application No. 60/252,125 filed on November 20, 2000 (Ex. 1021); Application No. 60/236,890 filed on September 29, 2000 (Ex. 1023); Application No. 60/246,463 filed on November 7, 2000 (Ex. 1022); Application No. 60/222,777 filed on August 03, 2000 (Ex. 1024) and Application No.60/205,178 filed on May 17, 2000 (Ex. 1025).

56. I further understand that, in a reexamination of the ’278 Patent (Control No. 90/014,675), the Examiner stated in the Order Granting the Reexamination and in the Examiner’s Non-Final Office Action that the ’278 Patent is only entitled to the priority date of July 3, 2007, which is the application date of the ’278 Patent. Ex. 1010, pp. 5-6; Ex. 1011, pp. 5-7. Specifically, the Examiner found that the earlier cited applications to the ’278 Patent did not

disclose that the tracking unit and its components are multi-vehicle compatible, that the vehicle includes a vehicle data bus that extends throughout the vehicle to facilitate communication between the controller and at least one vehicle device using at least one corresponding vehicle device code**,** and that the tracking unit includes a downloading interface for permitting downloading of enabling data related to the at least one corresponding vehicle device code.

57. Upon reviewing the aforementioned materials, I agree with the Examiner that that the earlier applications cited in the '278 Patent priority chain do not disclose the specified features.

VII. <u>CLAIM CONSTRUCTION</u>

58. I understand that Patent Owner has previously construed the term "enabling data" to mean "data related to the at least one corresponding vehicle device code for use by said multi-vehicle compatible controller." Ex. 1026, pp. 13-14, 18. I understand that the Court in that litigation adopted Patent Owner's proposed construction. Ex. 1027, pp. 22-23.

59. For the purposes of this declaration, I will apply Patent Owner's construction of "*enabling data*" to mean "data related to the at least one corresponding vehicle device code for use by said multi-vehicle compatible controller."

VIII. GROUNDS FOR REJECTION OF CLAIMS

A. Ground 1 – Flick ’885 Patent + Flick ’561 Patent

60. I understand that Petitioner is challenging claims 1-22 as obvious in view of Flick ’885 Patent in combination with Flick ’561 Patent and/or the knowledge of a person of skill in the art.

1. Description of Flick ’885 Patent

61. The ’885 Patent, entitled “Multi-Vehicle Compatible Control System for Reading from a Data Bus and Associated Methods,” was filed on May 31, 2000 (over seven years before the filing date of the ’278 Patent application) and issued on June 29, 2004.

62. I have been informed by counsel that the ’885 Patent is prior art to the ’278 Patent.

63. The ’885 Patent is directed to a multi-vehicle compatible system. According to the Abstract of the ’885 Patent: “The multi-vehicle compatible controller is for storing a set of device codes for a given vehicle device for a plurality of different vehicles, for reading a device code from a data communications bus, and for determining a match between a read device code and the stored device codes to thereby provide compatibility with a plurality of different vehicles.”

64. Figure 4 is illustrative of the claimed invention of the ’885 Patent:

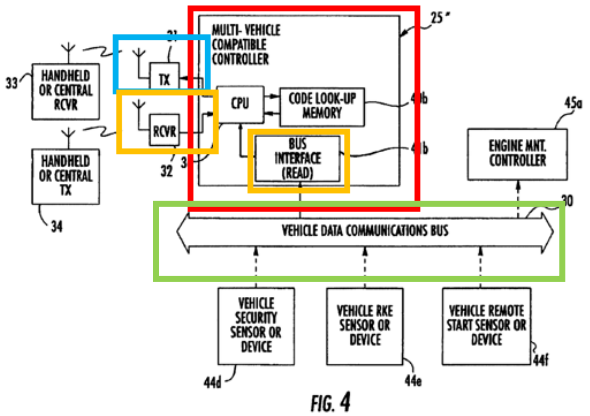

FIG. 4

65. The ’885 Patent discloses downloading data from the bus interface (depicted in the orange box in Figure 4) to the MVCC and incorporates by reference the entirety of U.S. Patent Nos. 6,011,460 (“’460 Patent”) and 6,812,829 (“’829 Patent), which describe a controller that downloads enabling data from a downloading device. Ex. 1007 (’460), 3:56-61; Ex. 1008 (’829), 10:43-60.

66. The use of a wireless communications device (depicted in the blue box in Figure 4) is also described in the ’885 Patent, which discloses a transmitter and a receiver for receiving signals from the transmitter, which can communicate over a cellular network or via satellite. Ex. 1003 (’885) 3:6-8; 5:45-50.

67. The ’885 Patent also describes a vehicle position determining device by disclosing sensors that detect the movement of a vehicle: “[v]ehicle security systems use vehicle sensors that “may detect . . . movement of the vehicle.”

Ex. 1003 ('885), 1:23-26. The '885 Patent also discloses "ultrasonic and microwave motion detectors", and "radar sensors may be used to monitor the area proximate the vehicle." *Id*., 1:29-32.

68. In my opinion, a POSITA would understand at the time of the claimed invention (July 3, 2007) that GPS, radar sensors and ultrasonic sensors existed for determining the position of a vehicle or relative position of a vehicle. For example, radar sensors have widely been used since the early 20th century to track the position and velocity of a moving object. Since at least 1990, automobile manufacturers like GM had implemented radar sensors into its vehicles to determine the position of a vehicle relative to other moving vehicles and objects. Ultrasonic sensors similarly have been used as a position determining device to measure the distance with objects within close range by transmitting high-frequency sound waves. For example, ultrasonic sensors have been used for parking applications to detect open parking slots, detect conditions around the vehicles for automatic parking functions (sensor to detect the proximity of objects or other cars), or in V2X (Vehicle to Other items communications, i.e., infrastructure) to sense vehicle location relative to devices and pedestrians to alert road hazards warnings. A POSITA would know at the time of the claimed invention that a GPS receiver, and radar sensor or ultrasonic sensor

could be used to determine a vehicle's relative position and velocity (speed), and that any of these technologies were viable options to use for vehicle safety applications, including e.g., connected vehicle applications such as vehicle platooning.

2. The Disclosures from the '885 Patent Appear in the '278 Patent.

69. I understand the inventor, Kenneth E. Flick ("Flick"), did not file the '278 Patent application as a continuation of the '885 Patent family because the time to file continuations lapsed. I understand Flick filed the '278 Patent application as a continuation-in-part to a different patent family unrelated to any MVCC feature. The elements of the '885 Patent appear almost verbatim in the '278 Patent's specification and claims, including the figures from the '885 Patent (with insubstantial modifications), as shown below:

’885 Patent	’278 Patent
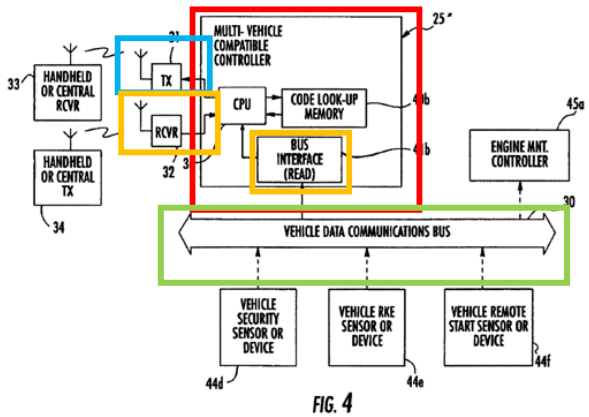	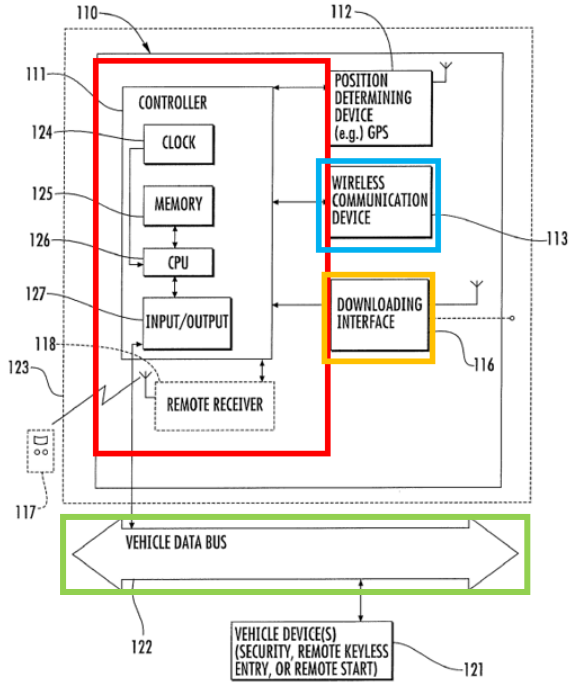

70. As shown in the figures above, the MVCC (depicted with a red box), the vehicle data bus (depicted in green), the downloading interface (depicted with an orange box) and the wireless communication device (depicted in blue) appearing in the ’885 Patent are disclosed in the ’278 Patent.

3. Description of Flick ’561 Patent

71. The ’561 Patent was filed on May 17, 2001, and issued on August 12, 2003.

72. I have been informed by counsel that the ’561 Patent is 102(b) prior art to the ’278 Patent.

73. The ’561 Patent discloses a vehicle position determining device. Ex. 1004, Claim 1.

4. Motivation to Combine Flick ’885 Patent and Flick ’561 Patent

74. In my opinion, a POSITA would be motivated to combine the teachings of the ’885 and the ’561 patents to produce the inventions claimed in the ’278 patent because there are several interrelated teachings, motivations and suggestions in each of these references.

75. For example, a POSITA would be motivated to combine the ’885 and the ’561 patents because both patents relate to vehicle security systems and address similar problems with vehicle security systems. The ’561 patent states that “should a vehicle be stolen, it would be beneficial to know the vehicle’s location so that authorities could be promptly and accurately directed to retrieve the vehicle.” Ex. 1004, 1:25-28. The ’885 patent similarly states that: “[v]ehicle security systems are widely used to deter vehicle theft.” Ex. 1003, 1:21-22. A tracking unit for a stolen vehicle would be an important consideration for any vehicle security system.

76. In addition, the ’885 patent discusses vehicle motion sensors that teach toward using a vehicle tracking unit discussed in the ’561 patent. Specifically, the ’885 patent discusses the use of sensors to detect “movement of the vehicle,” (Ex. 1003, 1:27-28), and also discloses “radar sensors may be used to monitor

the area proximate the vehicle." Ex. 1003, 1:32-33. In my opinion, these teachings of sensors to detect movement would motivate a POSITA to use a tracking unit, including a GPS sensor, as disclosed in the '561 Patent. The '561 disclosure similarly teaches toward the '885 Patent because of its objective to "permit ready interface to devices in the vehicle, such as those devices which may be part of an existing vehicle security system." *Id.*, 2:16-18. The prospects of incorporating a vehicle tracking unit from the '561 Patent would have motivated skilled artisans to include it for the vehicle security system disclosed in the '885 Patent.

77. Further, in my opinion, a POSITA would be motivated to combine the '885 and '561 patents to develop a system that could work with multiple vehicle types because common sense and market forces would teach them to develop a system that could be implemented in any vehicle type.

5. Claim Chart

78. The following claim chart illustrates how the claim elements are met by the combination of Flick '885 Patent + Flick '561 Patent:

U.S. Patent No. 8,032,278	**Flick '885 Patent + Flick '561 Patent**
[1pre] A multi-vehicle compatible tracking unit for a vehicle comprising a	In my opinion, Flick '885 Patent in combination with Flick '561 Patent renders every element of claim 1 obvious to a POSITA. In my opinion, to the extent the preamble is limiting, it is disclosed in, or rendered obvious by the '885 Patent and/or the

vehicle data bus extending throughout the vehicle, the multi-vehicle compatible tracking unit comprising:	’561 Patent. The ’885 Patent discloses a multi-vehicle compatible tracking unit for a vehicle comprising a vehicle data bus extending throughout the vehicle. For example, Figure 1 of the ’885 Patent (which appears to be very similar to Figure 10 of the ’278 Patent) shows a “vehicle data communications bus” extending throughout the vehicle by connecting to various vehicle devices (“sensors, actuators, etc.”) and vehicle controllers: Figures 3, 4, 7 and 8 of the ’885 Patent have a similar disclosure. 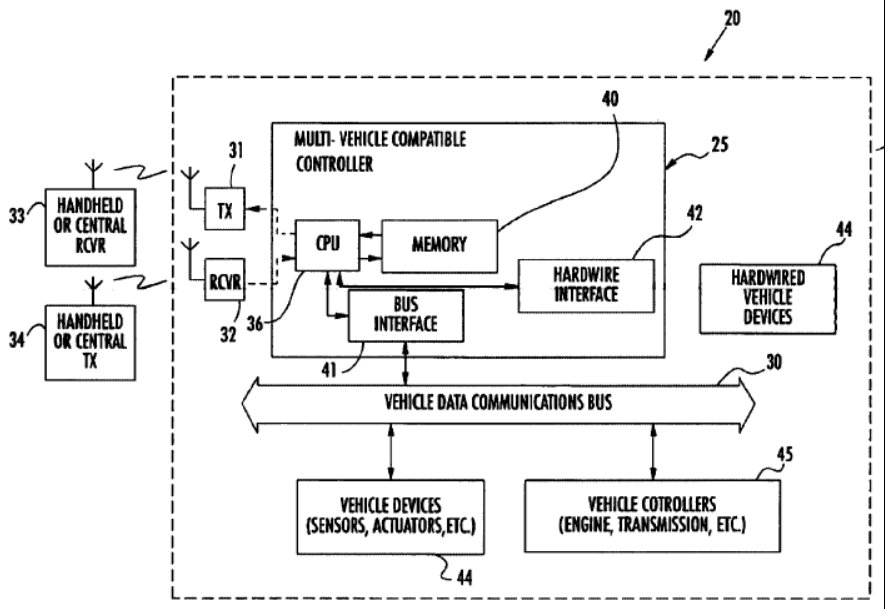 FIG. 1 “[I]t is therefore an object of the invention to provide a remote control system and related method for ***a vehicle comprising a data communications bus*** and at least one vehicle device connected to the data communications bus, and ***wherein the system is adapted to operate with different vehicles***.” Ex. 1003 (’885), 2:67-3:1-4 (emphasis added). In my opinion, the ’885 Patent discloses a multi-vehicle compatible tracking unit. As shown above, the ’885 Patent inherently discloses a multi-vehicle compatible tracking unit because one of the sensors disclosed is to “detect movement of the vehicle.” *Id.*, 1:28-29.

	In addition to "ultrasonic and microwave motion detectors", the '885 Patent also discloses that "radar sensors may be used to monitor the area proximate the vehicle" (*Id.*, 1:29-32). In my opinion, a POSITA would understand that radar sensors have long been used to track the position and velocity of a moving object, and are often used for tracking of terrestrial and airborne vehicles. To the extent that the '885 Patent does not explicitly disclose a tracking unit, in my opinion, the '561 Patent discloses and claims a vehicle tracking unit. "[I]t is therefore an object of the invention to provide ***a vehicle tracking unit*** and related methods that permit ready interface to devices in the vehicle . . ." Ex. 1004 ('561), 2:13-17 (emphasis added). In my opinion, a POSITA would be motivated to combine the disclosure of the '885 Patent with the '561 Patent at least because both patents relate to vehicle security systems. In addition, the '885 Patent's teaching of sensors to detect movement would motivate a POSITA to use the tracking unit, including a GPS sensor, as disclosed in the '561 Patent. The '561 disclosure similarly teaches toward the '885 Patent because of its objective to "permit ready interface to devices in the vehicle, such as those devices which may be part of an existing vehicle security system." *Id.,* 2:16-18.
[1a] a vehicle position determining device;	In my opinion, the '561 Patent discloses a vehicle position determining device. For example, the '561 Patent states: "The vehicle position determining device 42 may be provided by a GPS receiver, for example. The GPS receiver typically operates by receiving multiple signals from spaced apart satellites 38 as will be appreciated by those skilled in the art." Ex. 1004 ('561), 4:59-63.

> "In other embodiments, the vehicle position determining device 42 may be provided based upon communications with the cellular telephone network, or based upon other satellite transmissions, for example. As a particular example, time of arrival techniques are available based upon multiple reception paths to determine position via the cellular telephone network as will be appreciated by those skilled in the art." *Id.*, 4:64-67-5:1-4.

In my opinion, the '885 Patent also likely discloses a vehicle position determining device by disclosing sensors that detect the movement of a vehicle:

> Vehicle security systems use vehicle sensors that "may detect . . . movement of the vehicle." Ex. 1003 ('885), 1:23-26.
>
> Vehicle devices "may be considered to be relatively simple devices, such as sensors." *Id.*, 6:45-50; 6:16-20; 8:50-54, Claims 5, 20, 33, 41, Figs. 1, 4, and 8.

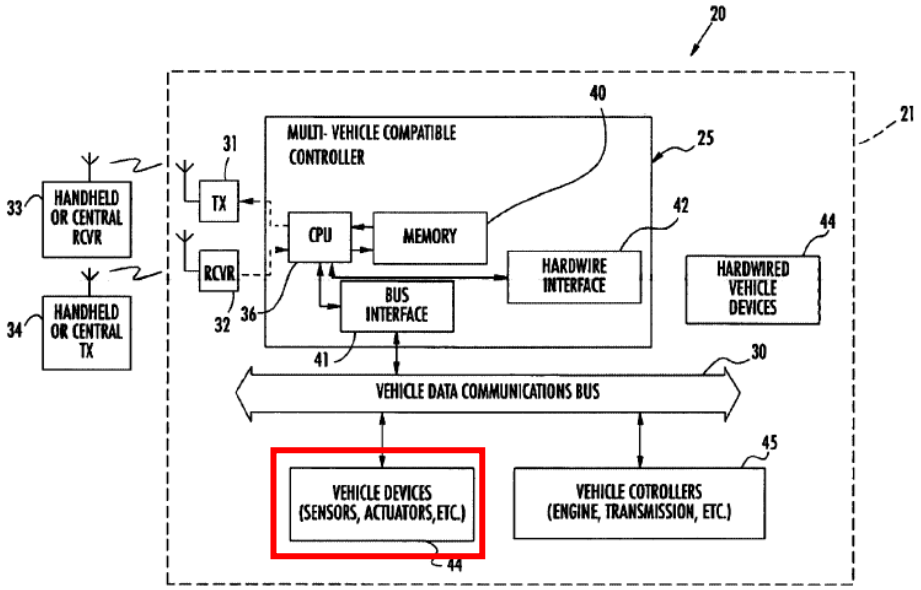

FIG. 1

The '885 Patent also discloses "ultrasonic and microwave motion detectors", and "radar sensors may be used to monitor

	the area proximate the vehicle." Ex. 1003 ('885), 1:29-32. As previously explained, in my opinion, a POSITA would understand that radar sensors have long been used to track the position and velocity of a moving object and are often used for tracking of terrestrial and airborne vehicles.
[1b] a wireless communications device;	In my opinion, the '885 Patent discloses a wireless communications device. The '885 Patent addresses problems with "hardwired" vehicle security systems (1:56-59) and discloses as "an object of the invention to provide a remote control system and related method for a vehicle comprising a data communications bus and at least one vehicle device connected to the data communications bus, and wherein the system is adapted to operate with different vehicles." Ex. 1003 ('885), 2:66-3:4. The '885 Patent explicitly discloses a wireless communications device as shown in the TX in box 31 and RCVR in box 32 of Figure 1, which is at the vehicle. The '885 Patent also states: The "control system include[es] a transmitter and a receiver for receiving signals from the transmitter." Ex. 1003 ('885), 3: 6-8. "[T]he transmitter may include at least a central station transmitter, and ***the receiver is at the vehicle***. The central station transmitter may be part of a satellite or cellular telephone network." *Id.*, 3:55-56 (emphasis added); 5:58-62.

	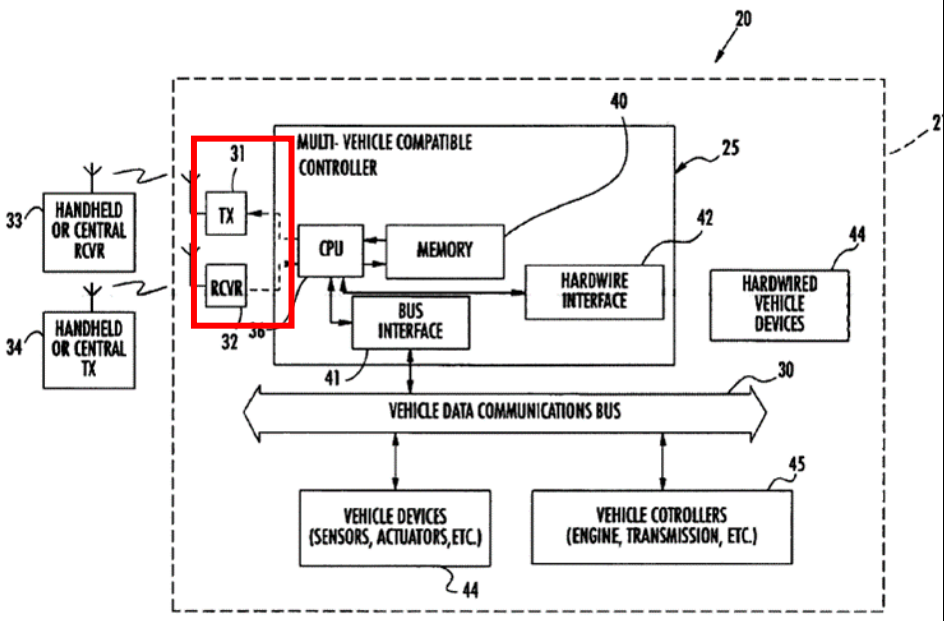 FIG. 1 The '885 Patent further states that the receiver at the vehicle is connected via a "direct radio frequency link" or "via other communications infrastructure, such as via satellite, or cellular communications, via the public switched telephone network (PSTN) and/or over the world wide web or Internet, as will be appreciated by those skilled in the art" *Id.*, 5:42-50. In my opinion, the'561 Patent also discloses a wireless communications device. Ex. 1004 ('561), Claim 1, 5:8-10, 20-25.
[1c] a multi-vehicle compatible controller for cooperating with said vehicle position determining device and said wireless	In my opinion, the '885 Patent discloses a multi-vehicle compatible controller for cooperating with a vehicle position determining device and a wireless communications device to send vehicle position information. The '885 Patent states: The "control system include[s] a transmitter and a receiver ***for receiving signals from the transmitter***, and ***a multi-vehicle compatible controller cooperating with the transmitter and receiver***." *Id.*, 3:6-9 (emphasis added).

communications device to send vehicle position information;	"The data bus 30 also illustratively connects one or more of vehicle security sensors or devices 44*d*, vehicle remote keyless entry sensors or devices, and vehicle remote start sensors or devices 44*f* to the multi-vehicle compatible controller 25." Ex. 1003, 8:50-54. 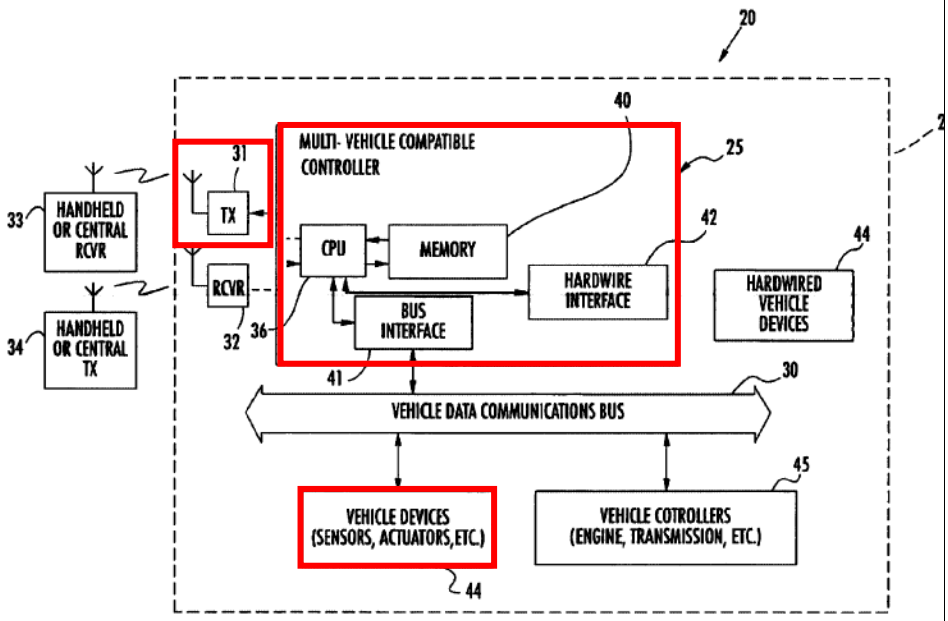 FIG. 1 In my opinion, as discussed in [1pre], the '885 Patent inherently discloses a multi-vehicle compatible tracking unit because one of the sensors disclosed is to "detect movement of the vehicle." *Id.*, 1:28-29. In addition to "ultrasonic and microwave motion detectors", the '885 Patent also discloses that "radar sensors may be used to monitor the area proximate the vehicle." *Id.,* 1:29-32. As previously explained, in my opinion, a POSITA would understand that radar sensors have long been used to track the position and velocity of a moving object, and are often used for tracking of terrestrial and airborne vehicles. The '885 Patent also states that: "as will be appreciated by those of skill in the art, the vehicle 21 includes a number of electrical/electronic devices that can be controlled and/or the status thereof read via the data communications bus 30." Ex.

	1003, 6:41-44. In my opinion, a POSITA would understand that a tracking unit is one of these devices, especially in light of the disclosure about radar sensors, and that the tracking unit sends vehicle position information to the multi-vehicle compatible controller via the data bus. In my opinion, the '561 Patent also discloses a controller for cooperating with said vehicle position determining device and said wireless communications device to send vehicle position information. *See* Ex. 1004 ('561), Claim 2 ("A vehicle tracking system according to claim 1 wherein said controller also cooperates with said vehicle position determining device and said wireless communications device to send vehicle position messages."). Further, in my opinion, a POSITA would understand that a multi vehicle compatible controller is a type of controller for use in the claimed vehicle tracking system of the '561 Patent.
[1d] said multi-vehicle compatible controller to be coupled to the vehicle data bus for communication thereover with at least one vehicle device using at least one corresponding vehicle device code from among a plurality thereof for different vehicles; and	In my opinion, the '885 Patent discloses a multi-vehicle compatible controller coupled to the vehicle data bus for communication thereover with at least one vehicle device using at least one corresponding vehicle device code from among a plurality thereof for different vehicles. For example, the '885 Patent discloses: "***The multi-vehicle compatible controller is*** for storing a set of device codes for a given vehicle device for a plurality of different vehicles, for reading a device code from a data communications bus, and ***for determining a match between a read device code and the stored device codes to thereby provide compatibility with a plurality of different vehicles***." Ex. 1003 ('885), Abstract (emphasis added). In my opinion, this disclosure in the '885 Patent is very similar to the "new matter" added to the '278 Patent: "The multi-vehicle compatible controller may be coupled to the vehicle data bus for communication thereover with at least one vehicle device using at least one corresponding vehicle

	device code from among a plurality thereof for different vehicles." Ex. 1001, Abstract. In my opinion, the disclosure of the '885 Patent is even more explicit than the disclosure of the '278 Patent in terms of how the multi-vehicle compatible controller is coupled to the vehicle data bus and communicates with the at least one vehicle device using at least one corresponding vehicle device code from a plurality thereof for different vehicles: "***[T]he multi-vehicle compatible controller may comprise a multi-vehicle compatible adaptor connected to the data communications bus for determining the match between the read device code and the stored device codes*** and generating an output signal responsive thereto, and a controller connected to the multi-vehicle compatible adaptor and being responsive to output signals therefrom." Ex. 1003 ('885), 3:38-45 (emphasis added). "***The data bus 30 also illustratively connects one or more of vehicle security sensors or devices 44d, vehicle remote keyless entry sensors or devices, and vehicle remote start sensors or devices 44 f to the multi-vehicle compatible controller 24***." *Id.*, 6:50-54 (emphasis added).

	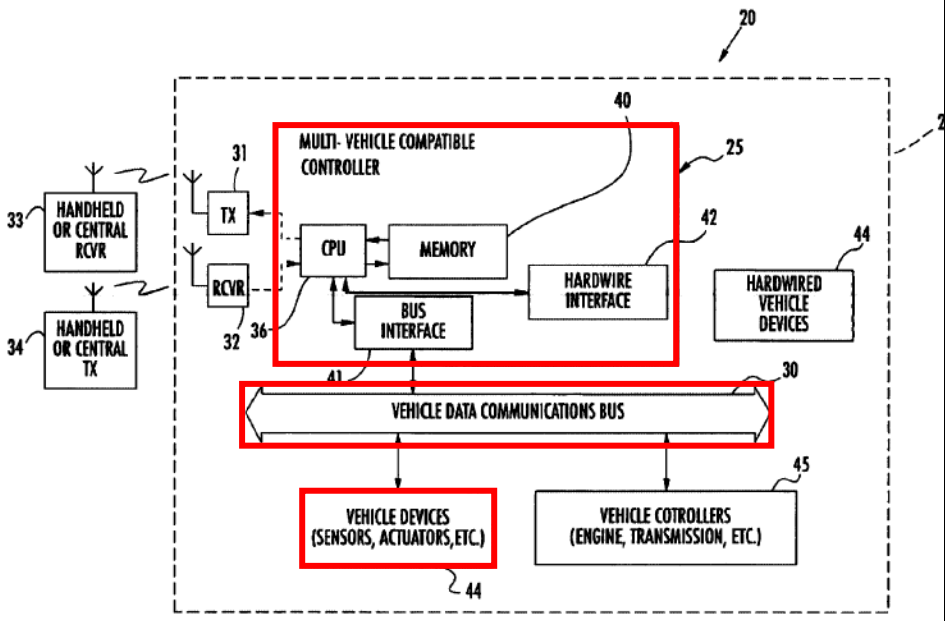 FIG. 1
[1e] a downloading interface for permitting downloading enabling data related to the at least one corresponding vehicle device code for use by said multi-vehicle compatible controller.	In my opinion, the '885 Patent discloses a downloading interface for permitting downloading enabling data related to the at least one corresponding vehicle device code for use by said multi-vehicle compatible controller in three separate ways. First, the '885 Patent discloses a downloading interface by describing the downloading function of the multi-vehicle compatible controller with the vehicle's bus interface: "More particularly, the multi-vehicle compatible controller 25 is for storing a set of device codes for a given vehicle device for a plurality of different vehicles, for reading a device code from the data communications bus 30, and for determining a match between a read device code and the stored device codes to thereby provide compatibility with a plurality of different vehicles. Such an arrangement provides for a relatively simple and straightforward approach to interface with a vehicle having a data communications bus 30." Ex. 1003 ('885), 9:1-10. In my opinion, a POSITA would understand the above disclosure along with the "bus interface" disclosed at column 6, lines 33-40 of the '885 Patent to be a downloading interface

	because the device codes read from the data communication bus must be downloaded first in order for the controller to perform the function of matching the read codes to any stored device codes. Second, the ’885 Patent also discloses the claimed downloading interface by incorporating by reference the entirety of U.S. Patent No. 6,011,460 (“’460 Patent”) at 10:10-17. In my opinion, the ’460 Patent discloses the claimed downloading interface. For example, the ’460 Patent states: “The remote control system also includes ***desired signal enabling means for causing the vehicle function controller to operate using a desired set of signals for a desired vehicle from a plurality of possible sets of digital signals for different vehicles, as may be downloaded from a downloading device temporarily connected thereto***.” Ex. 1007 (’460), 3:56-61 (emphasis added). Third, the ’885 Patent also incorporates by reference in their entirety two applications referred to by attorney docket number at column 10, line 62 – column 11, line 4. These correspond to issued U.S. Patent Nos. 6,346,876 and 6,812,829 (“’829 Patent). In my opinion, the ’829 Patent also discloses the claimed downloading interface: “The multi-vehicle compatibility may be provided by equipping a remote start controller 55 with ***a desired signal enabling function*** 57. ***This function or feature is for enabling operation using a desired set of signals for a corresponding desired vehicle*** from a plurality of sets of signals for different vehicles to thereby provide compatibility with a plurality of different vehicles.” Ex. 1008 (’829), 10:30-36 (emphasis added). “The desired signal enabling means 57 includes a signal set memory 81 operatively connected to the

	schematically illustrated download learning means 84. The ***download learning means*** may include an interface connected to the illustrated vehicle cellular telephone 86 ***to permit learning or downloading of the desired signal set*** from a remote or central monitoring and control station 88, for example." *Id.*, 11:50-57 (emphasis added).
[2] The multi-vehicle compatible tracking unit according to claim 1 wherein said downloading interface comprises a wired signal downloading interface.	In my opinion, the '885 Patent discloses a downloading interface that comprises a wired signal downloading interface. The '885 Patent discloses: "***The multi-vehicle compatible controller 25 also may optionally include a hardware interface 42 which may be directly connected to one or more vehicle devices 44***." Ex. 1003 ('885), 6:16-18. The '885 Patent also discloses: "Those of skill in the art will recognize other devices 44 that may be directly connected to the multi-vehicle compatible controller 25 via the hardwire interface 42. The hardwire interface 42 may included circuitry for sending signals to or reading signals from the vehicle devices 44 as will be appreciated by those skilled in the art." Ex. 1003 ('885), 6:24-32) In my opinion, the '460 Patent and the '829 Patent, which are incorporated by reference in the '885 Patent, both disclose a downloading interface comprising a wired signal downloading interface. For example, the '460 Patent discloses: "Turning now additionally to FIG. 6B, another variation of programming, learning or downloading of the download learning means 84 is explained. In this variation ***the download learning means 84 is temporarily connected to a computer, such as the illustrated portable laptop computer 115. The***

	connection, may be via a wire cable or wireless communications link as will be readily understood by those skilled in the art." Ex. 1007 ('460), 7:49-56) (emphasis added). The '829 Patent also discloses a downloading interface comprising a wired signal downloading interface. Ex. 1008 ('829), Fig. 10, 11:66-12:6.
[3] The multi-vehicle compatible tracking unit according to claim 2 wherein said wired signal downloading interface comprises a connector for temporary connection to a downloading device.	In my opinion, the '885 Patent discloses a downloading interface with a temporary connection to a downloading device: "The multi-vehicle compatible controller 25' may also include an optional hardwire interface . . . ." Ex. 1003 ('885), 7:19-20. In my opinion, the '460 Patent and the '829 Patent, which are incorporated by reference in the '885 Patent, both disclose a wired signal downloading interface comprising a connector for temporary connection to a downloading device. For example, the '460 Patent discloses: "***the download learning means 84 is temporarily connected to a computer, such as the illustrated portable laptop computer 115. The connection, may be via a wire cable*** or wireless communications link as will be readily understood by those skilled in the art." Ex. 1007 ('460), 7:49-56 (emphasis added). The '829 Patent also discloses a wired signal downloading interface comprising a connector for temporary connection to a downloading device. Ex. 1008 ('829), 11:66-12:6.
[4] The multi-vehicle compatible tracking unit according to	In my opinion, the '885 Patent discloses a wireless signal downloading interface where data from a remote transmitter can be downloaded to a receiver at the vehicle via the wireless communication network:

claim 1 wherein said downloading interface comprises a wireless signal downloading interface.	"The communications from the remote transmitter 34 to the receiver 32 at the vehicle is typically a direct radio frequency link, that is, there is no intervening communications links. However, in other embodiments, the remote transmitter 34 may indirectly communicate with the receiver 32 via other communications infrastructure, such as via satellite, or cellular communications, via the public switched telephone network (PSTN) and/or over the world wide web or Internet." Ex. 1003 ('885), 5:41-49. In my opinion, the '460 Patent and the '829 Patent, which are incorporated by reference in the '885 Patent, both disclose a downloading interface comprising a wireless signal downloading interface: For example, the '460 Patent discloses: "The download learning means 84 may include an interface connected to the illustrated vehicle cellular telephone 86 to permit learning or downloading of the desired signal set from a remote or central monitoring and control station 88, for example. The desired signal set may also alternatively be learned from the central station 88 through the satellite link provided by the satellite 110 and vehicle mounted satellite receiver 111 and associated antennas." Ex. 1007 ('460), 7:32-43. "the download learning means 84 is temporarily connected to a computer, such as the illustrated portable laptop computer 115. The connection, may be via a wire cable or wireless communications link as will be readily understood by those skilled in the art." *Id.*, 7: 49-56. See also Figs. 6A-6B. The '829 Patent also discloses a downloading interface comprising a wireless signal downloading interface. Ex. 1008 ('829), Figs. 9-10, 11:49-12:6.

[5] The multi-vehicle compatible tracking unit according to claim 4 wherein said wireless signal downloading interface comprises a wireless receiver for temporary connection to a downloading device.	In my opinion, the ’460 Patent and ’829 Patent both disclose a wireless signal downloading interface comprising a wireless receiver for temporary connection to a downloading device. For example, the ’460 Patent discloses: “The desired signal set may also alternatively be learned from the central station 88 through the satellite link provided by the satellite 110 and vehicle mounted satellite receiver 111 and associated antennas.” Ex. 1007 (’460), 7:39-43. The ’829 Patent also discloses a wireless receiver for temporary connection to a downloading device. Ex. 1008 (’829) 11:57-61.
[6] The multi-vehicle compatible tracking unit according to claim 1 wherein the corresponding at least one vehicle code is for reading from the at least one vehicle device.	In my opinion, the ’885 Patent discloses a corresponding at least one vehicle code is for reading from a vehicle device: “The multi-vehicle compatible controller 25 also illustratively includes a bus interface 41 cooperating with the CPU 36 ***to perform at least one of reading signals from the data communications bus 30***, or generating signals on the data bus.” Ex. 1003 (’885), 6:32-36 (emphasis added). “The compatibility to read a code and determine the message or content thereof for a vehicle device from among a plurality of vehicles can be used alone or in combination with the compatibility for writing or generating signals on the bus described above. More particularly, the multi-vehicle compatible controller 25” is for storing a set of device codes for a given vehicle device for a plurality of different vehicles, for reading a device code from the data communications bus, and for determining a match between a read device code and the stored device codes to thereby provide compatibility with a plurality of different vehicles.” *Id*., 8:64-67-9:1-7.

	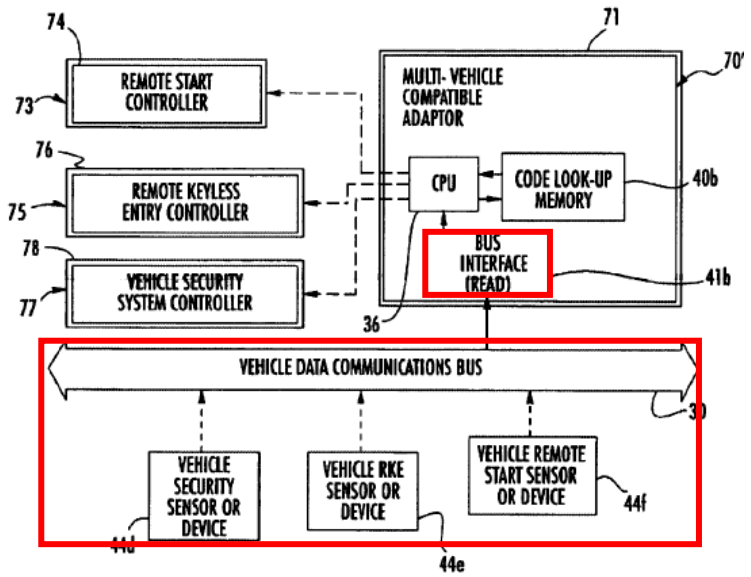 FIG. 8
[7] The multi-vehicle compatible tracking unit according to claim 1 wherein the corresponding at least one vehicle code is for writing to the at least one vehicle device.	In my opinion, the '885 Patent discloses data corresponding to at least one vehicle code is written to a vehicle device: "The compatibility to read a code and determine the message or content thereof for a vehicle device from among a plurality of vehicles can be used alone or in combination with the ***compatibility for writing or generating signals on the bus*** described above." Ex. 1003 ('885) 8:64-67-9:1 (emphasis added) "[T]he multi-vehicle compatible controller 25' preferably generates at least one set of command signals on the data communications bus 30 for the at least one vehicle device." *Id.*, 7:23-26; see also 6:32-36. "In other words, the multi-vehicle compatible controller may comprise a multi-vehicle compatible adaptor connected to the data communications bus for determining the match between the read device code and the stored device codes …." *Id.,* 3:38-48.

	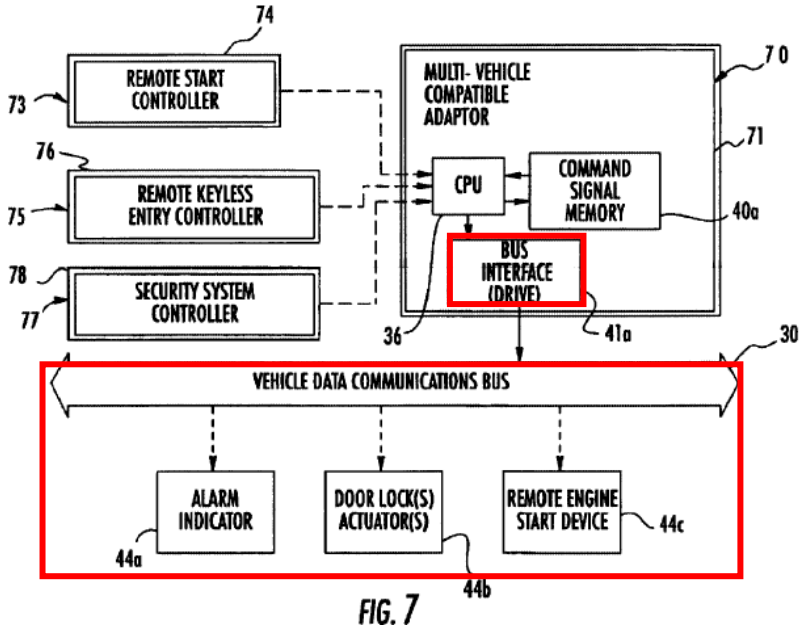 FIG. 7
[8] The multi-vehicle compatible tracking unit according to claim 1 wherein said downloading interface is also for permitting downloading of at least one programming instruction for said multi-vehicle compatible controller.	In my opinion, the '885 Patent discloses a downloading interface for permitting downloading of at least one programming instruction for said multi-vehicle compatible controller. "[T]he memory 40*a* may store the actual codes, but may also store data enabling generation of the set of command signals by the CPU 36." Ex. 1003 ('885), 8:28-30. "The engine management controller 45*a* could be sent signals such as to prevent or enable starting for security or remote start applications as will be appreciated by those skilled in the art." *Id.*, 7:15-19. In addition, in my opinion, the '460 Patent, which is incorporated in the '885 Patent, discloses a downloading interface for permitting downloading of at least one programming instruction for said multi-vehicle compatible controller: "The remote keyless entry system 90 also includes the desired signal enabling means 17 which permits the controller 91 to perform the desired door locking and trunk release remote control functions or operations as

	would be readily understood by those skilled in the art. As would be readily appreciated by those skilled in the art, any of the desired signal enabling means described herein and equivalent thereto may be used for the remote keyless entry system 90 in accordance with the present invention." Ex. 1007 ('460), 8:9-17.
[9] The multi-vehicle compatible tracking unit according to claim 1 further comprising a remote transmitter; and wherein said multi-vehicle compatible controller also performs at least one vehicle remote control function responsive to said remote transmitter.	In my opinion, the '885 Patent discloses a remote transmitter where the multi-vehicle compatible controller performs at least one vehicle remote control function responsive to the remote transmitter: "[B]oth a transmitter 31 and a receiver 32 are provided at the vehicle 21. In addition, both a receiver 33 and a transmitter 34 are provided remotely or away from the vehicle . . . The second transmitter/receiver pair 32, 34 may be used to cause a desired function to be performed at the vehicle, such as remote starting the engine, remotely unlocking the vehicle doors, or changing the mode of a security system between armed and disarmed modes, for example." Ex. 1003 ('885), 5:18-29; *see also* 7:4-11.
[10] The multi-vehicle compatible tracking unit according to claim 9 wherein the at least one vehicle remote control function comprises at least one of a vehicle security function, a remote keyless	*See* explanation and citation for Claim 9, above, for disclosure of a vehicle security function, a remote keyless entry function and a remote engine starting function.

entry function, and a remote engine starting function.	
[11] The multi-vehicle compatible tracking unit according to claim 1 wherein said wireless position determining device comprises a Global Positioning System (GPS) receiver.	In my opinion, the '561 Patent discloses a wireless position determining device comprising a Global Positioning System (GPS) receiver. "The vehicle position determining device 42 may be provided by a GPS receiver, for example. The GPS receiver typically operates by receiving multiple signals from spaced apart satellites 38 as will be appreciated by those skilled in the art." ('561 Patent, 4:59-63). Further, in my opinion, a POSITA would have been motivated to combine the '885 Patent with the GPS tracking unit disclosed in the '561 Patent.
[12] The multi-vehicle compatible tracking unit according to claim 1 further comprising a housing containing said vehicle position determining device, said wireless communications device, said multi-vehicle compatible controller, and said downloading interface.	In my opinion, the '885 Patent discloses a housing containing the wireless communications device, the MVCC and the downloading interface. The housing is shown in figure 10 below: 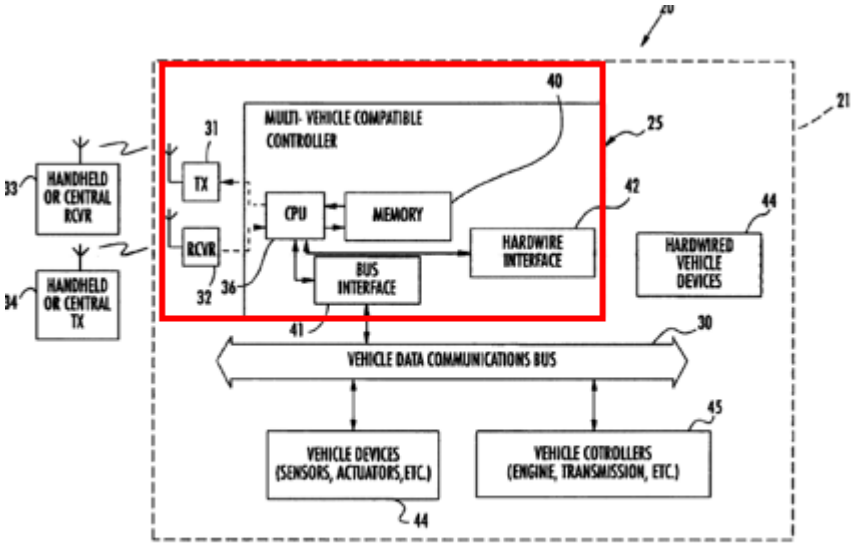

	In my opinion, a POSITA would have been motivated to combine the ’885 Patent with the GPS tracking unit disclosed in the ’561 Patent.
[13pre] A multi-vehicle compatible tracking unit for a vehicle comprising a vehicle data bus extending throughout the vehicle, the multi-vehicle compatible vehicle tracking unit comprising:	*See* explanation and citation for claim [1pre], above, for the disclosure of a multi-vehicle compatible tracking unit for a vehicle comprising a vehicle data bus extending throughout the vehicle.
[13a] a vehicle position determining device;	*See* explanation and citation for claim [1a], above, for the disclosure of a vehicle position determining device.
[13b] a wireless communications device;	*See* explanation and citation for claim [1b], above, for the disclosure of a wireless communication device.
[13c] a multi-vehicle compatible controller for cooperating with said vehicle position determining device and said wireless communications device to send vehicle position information;	*See* explanation and citation for claim [1c], above, for the disclosure of a MVCC cooperating with the vehicle position determining device and wireless communications device to send vehicle position information.

[13d] said multi-vehicle compatible controller to be coupled to the vehicle data bus for communication thereover with at least one vehicle device using at least one corresponding vehicle device code from among a plurality thereof for different vehicles; and	*See* explanation and citation for claim [1d], above, for the disclosure of an MVCC that can be coupled to the vehicle data bus for communications thereover with at least one vehicle device using at least one corresponding vehicle device code from among a plurality thereof for different vehicles.
[13e] a downloading interface for permitting downloading enabling data related to the at least one corresponding vehicle device code for use by said multi-vehicle compatible controller;	*See* explanation and citation for claim [1e], above, for the disclosure of a downloading interface that permits the downloading of enabling data related to the at least one corresponding vehicle device code for use by the MVCC.
[13f] said downloading interface comprising a connector for temporary connection to a	*See* explanation and citation for Claim 3, above, for the disclosure of a downloading interface comprising a connector for temporary connection to a downloading device.

downloading device.	
[14] The multi-vehicle compatible tracking unit according to claim 13 wherein the corresponding at least one vehicle code is for reading from the at least one vehicle device.	*See* explanation and citation for Claim 6, above, for the disclosure of the corresponding at least one vehicle code reads from the at least one vehicle device.
[15] The multi-vehicle compatible tracking unit according to claim 13 wherein the corresponding at least one vehicle code is for writing to the at least one vehicle device.	*See* explanation and citation for Claim 7, above, for the disclosure of the corresponding at least one vehicle code is for writing to the at least one vehicle device.
[16] The multi-vehicle compatible tracking unit according to claim 13 wherein said downloading interface is also for permitting downloading of at least one programming instruction for said multi-vehicle	*See* explanation and citation for Claim 8, above, for the disclosure of a downloading interface for downloading programming instructions for an MVCC.

compatible controller.	
[17] The multi-vehicle compatible tracking unit according to claim 13 further comprising a remote transmitter; and wherein said multi-vehicle compatible controller also performs at least one vehicle remote control function responsive to said remote transmitter.	*See* explanation and citation for Claim 9, above, for the disclosure of a remote transmitter and an MVCC performing a remote control function responsive to a remote transmitter.
[18pre] A multi-vehicle compatible tracking unit for a vehicle comprising a vehicle data bus extending throughout the vehicle, the multi-vehicle compatible vehicle tracking unit comprising:	*See* explanation and citation for claim [1pre], above, for the disclosure of a vehicle comprising a vehicle data bus extending throughout the vehicle.
[18a] a vehicle position determining device;	*See* explanation and citation for claim [1a], above, for the disclosure of a vehicle position determining device.

[18b] a wireless communications device;	*See* explanation and citation for claim [1b], above, for the disclosure of a wireless communication device.
[18c] a multi-vehicle compatible controller for cooperating with said vehicle position determining device and said wireless communications device to send vehicle position information;	*See* explanation and citation for claim [1c], above, for the disclosure of a MVCC cooperating with the vehicle position determining device and wireless communications device to send vehicle position information.
[18d] said multi-vehicle compatible controller to be coupled to the vehicle data bus for communication thereover with at least one vehicle device using at least one corresponding vehicle device code from among a plurality thereof for different vehicles; and	*See* explanation and citation for claim [1d], above, for the disclosure of an MVCC that can be coupled to the vehicle data bus for communications thereover with at least one vehicle device using at least one corresponding vehicle device code from among a plurality thereof for different vehicles.
[18e] a downloading interface for permitting downloading	*See* explanation and citation for claim [1e], above, for the disclosure of a downloading interface that permits the downloading of enabling data related to the at least one corresponding vehicle device code for use by the MVCC.

enabling data related to the at least one corresponding vehicle device code for use by said multi-vehicle compatible controller;	
[18f] said downloading interface comprising a wireless receiver for temporary connection to a downloading device.	*See* explanation and citation for claim 4, above, for the disclosure of a downloading interface comprising a receiver for temporarily connecting to a downloading device.
[19] The multi-vehicle compatible tracking unit according to claim 18 wherein the corresponding at least one vehicle code is for reading from the at least one vehicle device.	*See* explanation and citation for Claim 6, above, for the disclosure of the corresponding vehicle code is for reading from at least one vehicle device.
[20] The multi-vehicle compatible tracking unit according to claim 18 wherein the corresponding at least one vehicle code is for writing to the	*See* explanation and citation for Claim 7, above, for the disclosure of a vehicle code that can be written to a vehicle device.

at least one vehicle device.	
[21] The multi-vehicle compatible tracking unit according to claim 18 wherein said downloading interface is also for permitting downloading of at least one programming instruction for said multi-vehicle compatible controller.	*See* explanation and citation for Claim 8, above, for the disclosure of a downloading interface that permits downloading of programming instructions for the MVCC.
[22] The multi-vehicle compatible tracking unit according to claim 18 further comprising a remote transmitter; and wherein said multi-vehicle compatible controller also performs at least one vehicle remote control function responsive to said remote transmitter.	*See* explanation and citation for Claim 9, above, for the disclosure of a remote transmitter where the MVCC performs a remote control function responsive to the transmitter.

B. Ground 2 – Lewis (Claims 1-6, 8, 10-14, 16, 18-19, 21); Lewis + Underdahl (Claims 7, 9, 15, 17, 20, and 22)

79. I understand that Petitioner is challenging claims 1-6, 8, 10-14, 16, 18-19, and 21 as anticipated by Lewis. I also understand that Petitioner is challenging claims 7, 9, 15, 17, 20, and 22 as obvious in view of Lewis in combination with Underdahl and/or the knowledge of a person of skill in the art.

80. Lewis (Ex. 1005) was filed on November 22, 2005 and published on July 20, 2006. I have been informed by counsel that *Lewis* is prior art to the '278 Patent. Underdahl (Ex. 1006) was filed on January 10, 2003 and published on September 25, 2003. I have been informed by counsel that Underdahl is prior art to the '278 Patent.

1. Description of Lewis

81. Lewis is entitled "Vehicle Position and Performance Tracking System Using Wireless Communication," and discloses a real-time multi-vehicle compatible system. Ex. 1005. The system in Lewis monitors the diagnostics of vehicles within a peer-to-peer network and tracks the location of the vehicles using a GPS receiver. *Id.*, Abstract. The devices use a WiFi chipset and 3G or 4G cellular networking modem or a satellite modem for communicating wirelessly between drivers in the network. *Id.*, ¶¶ 0060, 0064.

82. The controller is compatible with different vehicle manufacturers, makes and models, and can interface with a vehicle's OBD-II system. *Id.*, Fig. 3, ¶¶ 19-

21. Lewis specifies that the controller recognizes at least four communication protocols used among different automobile manufacturers, including SAE J1850 VPW (GM), J1850 PWM (Ford), SAE J1708 and ISO 9141-2 (European, Asian, and Chrysler). *Id.*, ¶¶ 20-21.

83. The system in Lewis uses a GPS receiver for tracking the vehicle's position. *Id.*, ¶ 15.

84. The diagnostics and location of the vehicles are then transmitted over a wireless communication network to other vehicles within the peer network and downloaded onto an MVCC where a receiving party can decide how to respond to the information accordingly *Id.*, ¶ 12.

2. Description of Underdahl

85. Underdahl is entitled "Vehicle Usage Data Tracking System" and discloses a real time multi-vehicle compatible system. Ex. 1006. The system monitors diagnostics and the location of a vehicle for automobile dealerships and fleet vehicles. *Id.*, Abstract, ¶ 0055.

86. The system operates with different vehicles that recognize the SAE J1850 communication protocol, including VPW, PWM and ISO 9141, plus manufacturer and model specific variations. *Id.*, ¶ 0011.

87. The system includes a GPS receiver for tracking vehicles (*Id.*, ¶ 0055), a downloading interface for writing instructions to vehicle devices, *e.g.*, to lock

or unlock the doors or to disable the engine, and performing one or more vehicle remote control functions responsive to a remote transmitter that can include, for example, controlling the door lock system of a vehicle (*Id.*, Fig. 1, ¶ 0033).

3. Motivation to Combine Lewis and Underdahl

88. In my opinion, a POSITA would be motivated to combine the teachings of Lewis and Underdahl to produce the inventions claimed in claims 7, 9, 15, 17, 20, and 22 because there are several interrelated teachings, motivations and suggestions in each of these references. Dependent claims 7, 15, and 20 recite the same element of "the corresponding at least one vehicle code is for writing to the at least one vehicle device." Dependent claims 9, 17 and 22 recite the same element of "the multi-vehicle compatible controller performing at least one vehicle remote controller function responsive to a remote transmitter."

89. First, both Lewis and Underdahl are directed to managing a fleet of vehicles. For example, Lewis states that "[o]ne embodiment of the present system is suitable for … fleet operators accounting for the location and contents of their vehicles." Ex. 1005, ¶ 0014. Underdahl similarly states that "[m]any company or fleet vehicles are used for personal purposes. Currently, there are no systems available to track personal mileage, and the fleet operator is

dependent upon reports by the user to determine the amount of personal mileage." Ex. 1006, ¶ 0012.

90. Second, Lewis describes a need for monitoring the location and contents of vehicles by fleet operators. This need would motivate a POSITA to use Underdahl so that an operator can send an instruction to the vehicle remotely to read the location, speed and other contents of the vehicles within the fleet.

91. Third, a POSITA would be motivated to combine Lewis and Underdahl to develop a system in which a fleet operator can send instructions remotely to a fleet vehicle because common sense and market forces would teach them to develop a system that could be implemented in this way.

4. Claim Chart

92. The following claim chart illustrates how the claim elements are met by Lewis, individually, or based on the combination of Lewis + Underdahl.

U.S. Patent No. 8,032,278	Lewis (Claims 1-6, 8, 10-14, 16, 18-19, 21); Lewis + Underdahl (Claims 7, 9, 15, 17, 20, and 22)
[1pre] A multi-vehicle compatible tracking unit for a vehicle comprising a vehicle data bus extending throughout the vehicle, the multi-vehicle compatible tracking unit comprising:	To the extent it is limiting, in my opinion, Lewis discloses a multi-vehicle compatible tracking unit for a vehicle comprising a vehicle data bus extending throughout the vehicle. Lewis describes a multi-vehicle compatible tracking unit interfacing with the vehicle data bus of different vehicles through the vehicle's OBD-II system: "The input/output (I/O) subsystem **210** may include one or more of the following components: SAE J1850 transceiver and controller including support for GM Class 2, Ford SCP, and ISO 9141-2; a CAN/FlexRay transceiver and controller with SAE

	J1939 capabilities; an SAE J1708 compatible transceiver and controller." *Id.*, ¶ 0048. TABLE 1 Protocols / Signal Type / Manufacturer SAE J1850 VPW — Variable Pulse Width — GM SAE J1850 PWM — Pulse Width Modulation — Ford ISO 9141-2 — Two Serial Lines: Half-duplex (L) Full-duplex (K) — European, Asia, and Chrysler *See* also ¶¶ 0085, 0098; Figure 4 (sets communication protocol based on make and manufacturer of vehicle). In my opinion, Lewis discloses a tracking unit. A GPS receiver is disclosed in Lewis to track a vehicle's position. "In one embodiment, a real time vehicle performance and position monitoring system is provided that comprises at least one wireless networking module including: a GPS receiver to collect position data of a vehicle … data collector software, which collects position data from the GPS receiver and onboard diagnostic data from a microcontroller." *Id.,* ¶¶ 0024-0026.
[1a] a vehicle position determining device;	In my opinion, Lewis discloses a vehicle position determining device. For example, Lewis discloses a GPS receiver which is used to determine the position of a vehicle: "One embodiment of the present invention relates to a transportation system that integrates ***vehicle position*** and performance ***tracking*** and wireless networking ***to monitor vehicle position*** and performance over the Internet." *Id.*, ¶ 0002 (emphasis added). "[system comprises] a GPS receiver to collect position data of a vehicle." *Id.*, ¶ 0024.

	"A Garmin GPS 35-PC receiver is used to collect the recommended minimum data sentence (GPRMC) from the NMEA standard protocol (15). *Id.*, ¶ 0093.
[1b] a wireless communications device;	In my opinion, Lewis discloses a wireless communications device. Lewis describes a wireless communications device that transmits and receives diagnostic and position information of a vehicle over a GSM network, an integrated WiFi chip and a 3G or 4G networking modem, or a satellite modem: The multi-vehicle compatible tracking system "integrates vehicle position and performance tracking and ***wireless networking*** to monitor vehicle position and performance over the Internet." *Id.*, ¶ 0002. "The communication subsystem 230 may include one or more of the following components: an integrated WiFi chipset and 3G or 4G cellular networking modem; one or more universal sockets that supports the following: Mobile WiMax (IEEE 802.16e); any additional 3G or 4G modem; and/or software radio an interface for external satellite modem; and/or an interface to external SISO, SIMO, and/or MIMO antennae." *Id.*, ¶¶ 0059-0065. In one example, a "Sony Ericsson GC-82 EDGE PC card is used to access the Cingular Wireless GSM/GPRS network." *Id.*, ¶ 0093.
[1c] a multi-vehicle compatible controller for cooperating with said vehicle position determining	In my opinion, Lewis discloses a MVCC for cooperating with the vehicle position determining device and the wireless communications device to send vehicle position information. Lewis describes a multi-vehicle compatible controller fitted with input/output modules to enable real-time

<table>
<tr>
<td>device and said wireless communications device to send vehicle position information;</td>
<td>communication with the vehicle bus nodes (sensors and electronic control units). See Ex. 1005, Fig. 2. The system is compatible with different automotive communication protocols including:

<blockquote>"an SAE J1850 transceiver and controller including support for GM Class 2, Ford SCP, and ISO 9141-2" Id., ¶ 0049;

"a CAN/FlexRay transceiver and controller with SAE J1939 capabilities" Id., ¶ 0050;

"an SAE J1708 compatible transceiver and controller" Id., ¶ 0051;

"one or more programmable digital/analog inputs and outputs for 'non-networked' sensors" Id., ¶ 0052;</blockquote>

TABLE 1
<table>
<tr><th>Protocols</th><th>Signal Type</th><th>Manufacturer</th></tr>
<tr><td>SAE J1850 VPW</td><td>Variable Pulse Width</td><td>GM</td></tr>
<tr><td>SAE J1850 PWM</td><td>Pulse Width Modulation</td><td>Ford</td></tr>
<tr><td>ISO 9141-2</td><td>Two Serial Lines: Half-duplex (L) Full-duplex (K)</td><td>European, Asia, and Chrysler</td></tr>
</table>

The controller in Lewis can communicate over light-duty and heavy duty communication protocols:

<blockquote>"The present design incorporates both light-duty and heavy duty communication protocols. The SAE standards J1708 (16) and J1939 (17) describe examples of heavy-duty protocols and parameters. J1939 describes the next generation of heavy duty vehicle network based on controller area network (CAN) (18). Heavy-duty vehicles include, but are</blockquote></td>
</tr>
</table>

	not limited to, semi-trucks and buses." *Id.*, ¶ 0085 (emphasis added). The controller in Lewis will set the appropriate communication protocol depending on the make of the vehicle. "The BR-3 must be initialized and, ***depending on the make of the vehicle, a proper protocol must be set***." *Id.*, ¶ 0098 (emphasis added).
[1d] said multi-vehicle compatible controller to be coupled to the vehicle data bus for communication thereover with at least one vehicle device using at least one corresponding vehicle device code from among a plurality thereof for different vehicles; and	In my opinion, Lewis discloses an MVCC coupled to the vehicle data bus for communication thereover with at least one vehicle device using at least one corresponding vehicle device code from among a plurality thereof for different vehicles. Lewis discloses an MVCC coupled to the vehicle data bus for communication with the vehicle devices: "The BR-3 OBD-II interface is connected to the vehicle via the SAE J1962 (13) connector located within three feet of the steering column. A serial RS232 port on the laptop allows the data collector software to communicate with the BR-3 OBD-II interface." *Id.*, ¶ 0096. Lewis discloses an MVCC communicating with one or more vehicle devices: "The OBD-II system allows for monitoring of most electrical systems on the vehicle. Nonlimiting examples of monitored items include speed, RPM, ignition voltage, oil, temperature, oil pressure, tire pressure, vehicle integrity, and coolant temperature." *Id.*, ¶ 0019. The system transmits on-board diagnostics parameter IDs (PIDS), which are codes to request data from vehicle devices defined in SAE J1979. *See* Ex. 1002.

	"The VPPTS 100 prototype uses generic parameter identifications or PIDs defined in SAE J1979 (14). These PIDs include vehicle speed, engine RPM, calculated throttle position sensor (TPS), engine load, engine coolant temperature, and air intake pressure. Car manufacturers such as GM and Ford have enhanced PIDs that are specialized for their vehicles." *Id.*, ¶ 0097. "Once [communication protocols] are established polling for data will commence on a continuous basis." *Id.*, ¶ 0098.
[1e] a downloading interface for permitting downloading of enabling data related to the at least one corresponding vehicle device code for use by said multi-vehicle compatible controller.	In my opinion, Lewis discloses a downloading interface for permitting downloading of enabling data related to the at least one corresponding vehicle device code for use by the MVCC. The system in Lewis allows vehicles to download vehicle diagnostic and position data of other vehicles within the peer network. The diagnostic information includes data associated with a corresponding vehicle device code (or PID): "The communication subsystem 230 is capable of ***vehicle-to-vehicle (peer-to-peer) communication for relaying any data*** including vehicle location and ***performance data*** or Intelligent Transportation System (ITS) data; and/or exchanging personal (driver or vehicle), ITS, or Internet (restaurant location) data." *Id.*, ¶ 0042. Lewis states that diagnostic information from one vehicle is transmitted to another vehicle through wireless communication: "Vehicles 10, 20, 30 ***may wirelessly communicate with each other using P2P***, or wirelessly communicate with one or more base servers 40, 50." *Id.*, ¶ 0022 (emphasis added).

	In one example, a "laptop, equipped with two serial ports (DB9) and a PCMCIA port, acts as a hub through which data is routed." *Id.*, ¶ 0093. The downloaded data is displayed to a driver either in playback form or real-time dashboard gauges, and the driver can determine what information from another vehicle is displayed: The system "may display vehicle location on a highly interactive GIS-based map and/or process and ***display data in various forms including playback functionality and real-time dashboard gauges. The database server may retrieve data from one or more databases and forward it to the GUI***." *Id.*, ¶ 0047 (emphasis added). "***the receiving vehicles may determine what is displayed***." *Id.*, ¶ 0091 (emphasis added). A PC interface provides on-site debugging of the system. In my opinion, the PC interface is used to download data from the PC to the system in order to fix errors or bugs within the system: "The input/output (I/O) subsystem 210 may include one or more of the following components … a PC interface (USB/RS232) ***for on-site debugging***; and/or one or more visual indicators for operating modes and programmable fault conditions." *Id.*, ¶¶ 0054 (emphasis added).
[2] The multi-vehicle compatible tracking unit according to claim 1 wherein said downloading interface	In my opinion, Lewis discloses a wired signal downloading interface. For example, Lewis discloses a wired signal downloading interface connected to a laptop or PC, as shown in Figure 3 below:

comprises a wired signal downloading interface.	FIGURE 3 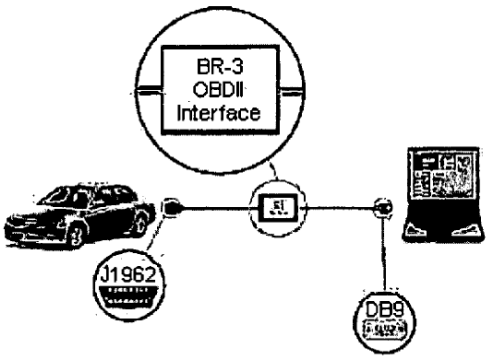 "A laptop, equipped with two serial ports (DB9) and a PCMCIA port, acts as a hub through which data is routed." *Id.*, ¶ 0093. "A serial RS232 port on the laptop allows the data collector software to communicate with the BR-3 OBD-II interface." Ex. 1005, ¶ 0096. "a PC interface (USB/RS232) for on-site debugging; and/or one or more visual indicators for operating modes and programmable fault conditions." *Id.*, ¶¶ 0054-55.
[3] The multi-vehicle compatible tracking unit according to claim 2 wherein said wired signal downloading interface comprises a connector for temporary connection to a downloading device.	*See* explanation and citation for Claim 2, above, for disclosing a wired signal downloading interface includes a connector for temporary connection to a downloading device.
[4] The multi-vehicle compatible	In my opinion, Lewis discloses a wireless signal downloading interface:

tracking unit according to claim 1 wherein said downloading interface comprises a wireless signal downloading interface.	"Vehicles 10, 20, 30 ***may wirelessly communicate with each other using P2P***, or wirelessly communicate with one or more base servers 40, 50." *Id.*, ¶ 0022.
[5] The multi-vehicle compatible tracking unit according to claim 4 wherein said wireless signal downloading interface comprises a wireless receiver for temporary connection to a downloading device.	*See* explanation and citation for Claim 4, above, for disclosure of a wireless signal downloading interface comprising a wireless receiver for temporary connection to a downloading device.
[6] The multi-vehicle compatible tracking unit according to claim 1 wherein the corresponding at least one vehicle code is for reading from the at least one vehicle device.	In my opinion, Lewis discloses a system wherein the corresponding at least one vehicle code is for reading from a vehicle device. For example, Lewis discloses using vehicle device codes or PIDs for reading from one or more vehicle devices: The MVCC "uses generic parameter identifications or PIDs defined in SAE J1979 (14). These PIDS include vehicle speed, engine RPM, calculated throttle position sensor (TPS), engine load, engine coolant temperature, and air intake pressure." Ex. 1005, ¶ 0097; *see also Id.*, ¶¶ 0006; 0098.

	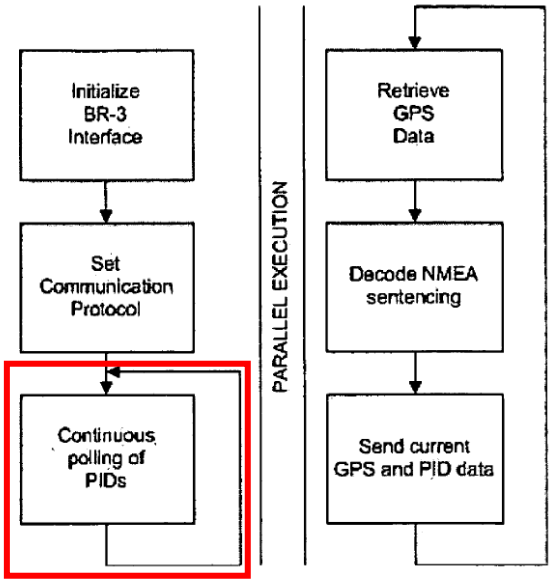
[7] The multi-vehicle compatible tracking unit according to claim 1 wherein the corresponding at least one vehicle code is for writing to the at least one vehicle device.	In my opinion, Underdahl discloses a system wherein the corresponding at least one vehicle code is for writing to a vehicle device. For example, Underdahl discloses that that the multi-vehicle compatible controller writes instructions to vehicle devices, including a vehicle's door locking system (to lock or unlock the doors) and to a vehicle's engine control system (to disable the engine): "The signal sensor 112 is capable of receiving signals from a transmitter 120. ***The control unit 114 is capable of controlling the door locking system*** 106 so that when the signal sensor receives a predetermined signal (such as a specific code) from the transmitter 120, ***the control unit 114 causes the door locking system 106 to change the door lock state of at least one door of the vehicle*** 102." Ex. 1006, ¶ 0033 (emphasis added). "The control unit 114 may also be coupled to the engine 104 of the vehicle 102, so that upon changing the door lock state to 'locked,' the engine will be disabled, thereby providing a theft deterrent." *Id.*

	In my opinion, Underdahl also discloses a multi-vehicle compatible tracking unit: Underdahl teaches "a system and method of tracking usage habits of an operator of a vehicle that may be installed easily in a variety of vehicle types." Ex. 1006, ¶ 0011. "The SAE J1850 network is used on all US vehicles manufactured since 1996. There are a number of variations, specifically VPW, PWM, and ISO 9141, plus manufacturer and model specific variations.… Advantages of the SAE J1850 interface include: ***they provide a standardized connector for all vehicles and variations***; a connection scheme is simplified . . . ." Ex. 1006, ¶ 0011 (emphasis added); see also ¶ 0042. In my opinion, a POSITA would be motivated to combine the disclosure of Lewis with Underdahl because both references relate to fleet management and tracking vehicle diagnostics and location information using a multi-vehicle compatible tracking unit.
[8] The multi-vehicle compatible tracking unit according to claim 1 wherein said downloading interface is also for permitting downloading of at least one programming instruction for said multi-vehicle compatible controller.	In my opinion, Lewis discloses a downloading interface for permitting downloading of at least one programming instruction for the MVCC. For example, Lewis discloses downloading of vehicle diagnostics for display by another vehicle: "[T]he communication subsystem 230 is capable of ***vehicle-to-vehicle (peer-to-peer) communication for relaying any data*** including vehicle location and performance data or Intelligent Transportation System (ITS) data; and/or exchanging personal (driver or vehicle), ITS, or Internet (restaurant location) data." Ex. 1005, ¶ 0042.

	The system "may display vehicle location on a highly interactive GIS-based map and/or process and ***display data in various forms including playback functionality and real-time dashboard gauges. The database server may retrieve data from one or more databases and forward it to the GUI***." *Id.*, ¶ 0047 (emphasis added). In addition, the downloading interface can provide on-site debugging of the system though a PC interface: "The input/output (I/O) subsystem 210 may include … a PC interface (USB/RS232) for on-site debugging." *Id.*, ¶¶ 0054. In my opinion, on-site debugging as described in Lewis involves updates and fixes downloaded to the device.
[9] The multi-vehicle compatible tracking unit according to claim 1 further comprising a remote transmitter; and wherein said multi-vehicle compatible controller also performs at least one vehicle remote control function responsive to said remote transmitter.	In my opinion, Underdahl discloses a multi-vehicle compatible controller that performs one or more vehicle remote control functions responsive to a remote transmitter. For example, Underdahl discloses using the MVCC to control the door lock system of a vehicle and disabling the engine in response to a remote transmitter: "***The control unit 114 is capable of controlling the door locking system*** 106 so that when the signal sensor receives a predetermined signal (such as a specific code) from the transmitter 120, ***the control unit 114 causes the door locking system 106 to change the door lock state of at least one door of the vehicle*** 102." Ex. 1006, ¶ 0033 (emphasis added). "The control unit 114 may also be coupled to the engine 104 of the vehicle 102, so that upon changing the door lock state to 'locked,' the engine will be disabled, thereby providing a theft deterrent." *Id.*

	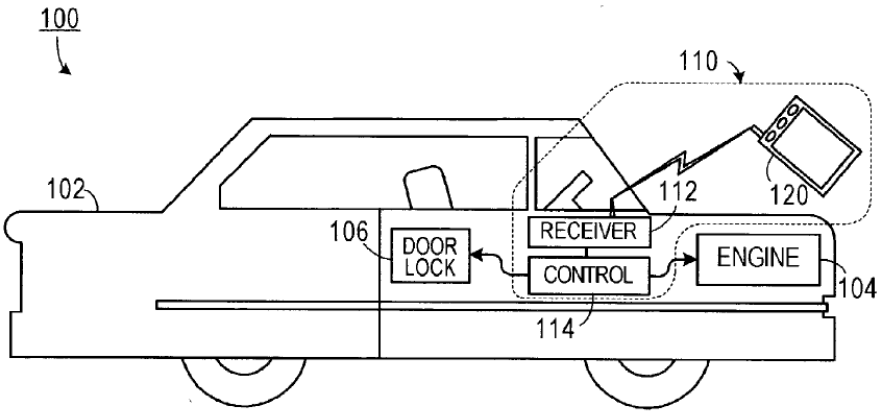 FIG. 1 As previously described, in my opinion, a POSITA would be motivated to combine the disclosure of the Lewis with Underdahl because both references relate to fleet management and tracking vehicle diagnostics and location information using a multi-vehicle compatible tracking unit.
[10] The multi-vehicle compatible tracking unit according to claim 9 wherein the at least one vehicle remote control function comprises at least one of a vehicle security function, a remote keyless entry function, and a remote engine starting function.	*See* explanation and citation for Claim 9, above, for disclosure of a vehicle security function, a remote keyless entry function and a remote engine starting function.
[11] The multi-vehicle compatible tracking unit according to claim 1 wherein said	In my opinion, Lewis discloses a GPS receiver: The system includes "a GPS receiver to collect position data of a vehicle." Ex. 1005, ¶ 0024.

wireless position determining device comprises a Global Positioning System (GPS) receiver.	In one example, a "Garmin GPS 35-PC receiver is used to collect the recommended minimum data sentence (GPRMC) from the NMEA standard protocol (15)." *Id.*, ¶ 0093.
[12] The multi-vehicle compatible tracking unit according to claim 1 further comprising a housing containing said vehicle position determining device, said wireless communications device, said multi-vehicle compatible controller, and said downloading interface.	In my opinion, Lewis discloses a housing containing the GPS, a wireless communications device, a multi-vehicle compatible controller, and a downloading interface. "One embodiment includes a single-board that integrates modular chipset solutions for the automotive bus interface, a GPS receiver, and a GSM/GPRS modem into a less than a 16 in 2 board located inside the dashboard or in the trunk of a vehicle." Ex. 1005, ¶ 0084.
[13pre] A multi-vehicle compatible tracking unit for a vehicle comprising a vehicle data bus extending throughout the vehicle, the multi-vehicle compatible vehicle tracking unit comprising:	*See* explanation and citation for claim [1pre], for the disclosure of a multi-vehicle compatible tracking unit for a vehicle comprising a vehicle data bus extending throughout the vehicle.
[13a] a vehicle position determining device;	*See* explanation and citation for claim [1a], for the disclosure of a vehicle position determining device.

[13b] a wireless communications device;	*See* explanation and citation for claim [1b], for the disclosure of a wireless communication device.
[13c] a multi-vehicle compatible controller for cooperating with said vehicle position determining device and said wireless communications device to send vehicle position information;	*See* explanation and citation for claim [1c], above, for the disclosure of a MVCC cooperating with the vehicle position determining device and wireless communications device to send vehicle position information.
[13d] said multi-vehicle compatible controller to be coupled to the vehicle data bus for communication thereover with at least one vehicle device using at least one corresponding vehicle device code from among a plurality thereof for different vehicles; and	*See* explanation and citation for claim [1d], for the disclosure of an MVCC that can be coupled to the vehicle data bus for communications thereover with at least one vehicle device using at least one corresponding vehicle device code from among a plurality thereof for different vehicles.
[13e] a downloading interface for permitting downloading enabling data related to the at least one	*See* explanation and citation for claim [1e], for the disclosure of a downloading interface that permits the downloading of enabling data related to the at least one corresponding vehicle device code for use by the MVCC.

corresponding vehicle device code for use by said multi-vehicle compatible controller;	
[13f] said downloading interface comprising a connector for temporary connection to a downloading device.	*See* explanation and citation for Claim 3, for the disclosure of a downloading interface comprising a connector for temporary connection to a downloading device.
[14] The multi-vehicle compatible tracking unit according to claim 13 wherein the corresponding at least one vehicle code is for reading from the at least one vehicle device.	*See* explanation and citation for Claim 6, above, for the disclosure of the corresponding at least one vehicle code reads from the at least one vehicle device.
[15] The multi-vehicle compatible tracking unit according to claim 13 wherein the corresponding at least one vehicle code is for writing to the at least one vehicle device.	*See* explanation and citation for Claim 7, above, for the disclosure of the corresponding at least one vehicle code is for writing to the at least one vehicle device.
[16] The multi-vehicle compatible tracking unit according to claim	*See* explanation and citation for Claim 8, above, for the disclosure of a downloading interface for downloading programming instructions for an MVCC.

13 wherein said downloading interface is also for permitting downloading of at least one programming instruction for said multi-vehicle compatible controller.	
[17] The multi-vehicle compatible tracking unit according to claim 13 further comprising a remote transmitter; and wherein said multi-vehicle compatible controller also performs at least one vehicle remote control function responsive to said remote transmitter.	*See* explanation and citation for Claim 9, above, for the disclosure of a remote transmitter and an MVCC performing a remote control function responsive to a remote transmitter.
[18pre] A multi-vehicle compatible tracking unit for a vehicle comprising a vehicle data bus extending throughout the vehicle, the multi-vehicle compatible vehicle tracking unit comprising:	*See* explanation and citation for claim [1pre], above, for the disclosure of a vehicle comprising a vehicle data bus extending throughout the vehicle.
[18a] a vehicle position	*See* explanation and citation for claim [1a], above, for the disclosure of a vehicle position determining device.

determining device;	
[18b] a wireless communications device;	*See* explanation and citation for claim [1b], above, for the disclosure of a wireless communication device.
[18c] a multi-vehicle compatible controller for cooperating with said vehicle position determining device and said wireless communications device to send vehicle position information;	*See* explanation and citation for claim [1c], above, for the disclosure of a MVCC cooperating with the vehicle position determining device and wireless communications device to send vehicle position information.
[18d] said multi-vehicle compatible controller to be coupled to the vehicle data bus for communication thereover with at least one vehicle device using at least one corresponding vehicle device code from among a plurality thereof for different vehicles; and	*See* explanation and citation for claim [1d], above, for the disclosure of an MVCC that can be coupled to the vehicle data bus for communications thereover with at least one vehicle device using at least one corresponding vehicle device code from among a plurality thereof for different vehicles.
[18e] a downloading interface for permitting downloading enabling data	*See* explanation and citation for claim [1e], above, for the disclosure of a downloading interface that permits the downloading of enabling data related to the at least one corresponding vehicle device code for use by the MVCC.

related to the at least one corresponding vehicle device code for use by said multi-vehicle compatible controller;	
[18f] said downloading interface comprising a wireless receiver for temporary connection to a downloading device.	*See* explanation and citation for Claim 4, above, for the disclosure of a downloading interface comprising a receiver for temporarily connecting to a downloading device.
[19] The multi-vehicle compatible tracking unit according to claim 18 wherein the corresponding at least one vehicle code is for reading from the at least one vehicle device.	*See* explanation and citation for Claim 6, above, for the disclosure of the corresponding vehicle code is for reading from at least one vehicle device.
[20] The multi-vehicle compatible tracking unit according to claim 18 wherein the corresponding at least one vehicle code is for writing to the at least one vehicle device.	*See* explanation and citation for Claim 7, above, for the disclosure of a vehicle code that can be written to a vehicle device.

[21] The multi-vehicle compatible tracking unit according to claim 18 wherein said downloading interface is also for permitting downloading of at least one programming instruction for said multi-vehicle compatible controller.	*See* explanation and citation for Claim 8, above, for the disclosure of a downloading interface that permits downloading of programming instructions for the MVCC.
[22] The multi-vehicle compatible tracking unit according to claim 18 further comprising a remote transmitter; and wherein said multi-vehicle compatible controller also performs at least one vehicle remote control function responsive to said remote transmitter.	*See* explanation and citation for Claim 9, above, for the disclosure of a remote transmitter where the MVCC performs a remote control function responsive to the transmitter.

IX. CONCLUSION

93. For the reasons discussed above, I believe that a POSITA would have understood the above-discussed prior art references disclose the subject matter recited in all of the Challenged Claims.

94. This declaration represents the relevant opinions that I have formed to date and based on the material currently available to me. I reserve the right to supplement this Declaration to address any new information offered by Patent Owner or provided by the Board. I also reserve the right to supplement this Declaration insofar as Patent Owner is permitted to supplement the record with any opinions or arguments.

95. In signing this declaration, I understand that the declaration will be filed as evidence in a review proceeding before the Board. I acknowledge that I may be subject to cross examination in the case and that cross examination will take place within the United States. If cross examination is required of me, I will appear for cross examination within the United States during the time allotted for cross examination.

96. I hereby declare that all statements made herein of my own knowledge are true and that all statements made on information and belief are believed to be true; and further that these statements were made with the knowledge that willful false statements and the like punishable by fine or imprisonment, or both, under Section 1001 of the Title 18 of the United States Code.

Executed June 30, 2023 in Blacksburg, Virginia

_____

Azim Eskandarian, D.Sc.