US006957133B1

(12) **United States Patent**
Hunt et al.

(10) **Patent No.: US 6,957,133 B1**
(45) **Date of Patent: Oct. 18, 2005**

(54) **SMALL-SCALE, INTEGRATED VEHICLE TELEMATICS DEVICE**

(75) Inventors: **Robert Hunt**, Vista, CA (US); **Larkin Lowrey**, Seabrook, TX (US); **Matthew Banet**, Del Mar, CA (US)

(73) Assignee: **Reynolds & Reynolds Holdings, Inc.**, Dayton, OH (US)

(*) Notice: Subject to any disclaimer, the term of this patent is extended or adjusted under 35 U.S.C. 154(b) by 0 days.

(21) Appl. No.: **10/431,947**

(22) Filed: **May 8, 2003**

(51) **Int. Cl.**[7] **G06F 7/00**
(52) **U.S. Cl.** **701/29**; 701/36
(58) **Field of Search** 701/29–33, 36

(56) **References Cited**

U.S. PATENT DOCUMENTS

3,748,894	A	7/1973	White et al.
4,258,421	A	3/1981	Juhasz et al.
4,602,127	A	7/1986	Neely et al.
4,690,475	A	9/1987	McElroy
4,694,408	A	9/1987	Zaleski
4,926,330	A	5/1990	Abe et al.
4,956,777	A	9/1990	Cearley et al.
5,003,317	A	3/1991	Gray et al.
5,026,293	A	6/1991	Wilson
5,050,080	A	9/1991	Abe
5,157,610	A	10/1992	Asano et al.
5,223,844	A	6/1993	Mansell et al.
5,289,378	A	2/1994	Miller et al.
5,343,906	A	9/1994	Tibbals, III
5,442,553	A	8/1995	Parrillo
5,450,321	A	9/1995	Crane
5,463,567	A	10/1995	Boen et al.
5,473,540	A	12/1995	Schmitz
5,479,479	A	12/1995	Braitberg et al.
5,491,486	A	2/1996	Welles et al.
5,532,927	A	7/1996	Pink et al.
5,537,336	A	7/1996	Joyce
5,550,551	A	8/1996	Alesio
5,574,427	A	11/1996	Cavallaro
5,671,141	A	9/1997	Smith et al.
5,673,305	A	9/1997	Ross

(Continued)

FOREIGN PATENT DOCUMENTS

CA	2133673	10/1994
EP	0816820 A2	1/1998
WO	WO 00/40038	7/2000
WO	WO 00/79727	12/2000

OTHER PUBLICATIONS

U.S. Appl. No. 09/776,033, filed Feb. 1, 2001, Banet et al.
U.S. Appl. No. 09/808,690, filed Mar. 14, 2001, Lowrey et al.
U.S. Appl. No. 09/922,954, filed Aug. 6, 2001, Lowrey et al.
U.S. Appl. No. 10/810,373, filed Mar. 26, 2004, Lowrey et al.
U.S. Appl. No. 10/823,478, filed Apr. 13, 2004, Williams et al.

(Continued)

Primary Examiner—Yonel Beaulieu
(74) *Attorney, Agent, or Firm*—Stephen C. Glazier; Kirkpatrick & Lockhart; Nicholson Graham

(57) **ABSTRACT**

Embodiments of the present invention relate to a wireless appliance for monitoring a vehicle. In an embodiment, the appliance includes: (1) a microprocessor; (2) a vehicle-communication circuit; (3) a GPS module; and (4) a wireless transmitter. The wireless transmitter receives and transmits location-based data generated by the GPS module and diagnostic data collected by the vehicle-communication circuit. The vehicle-communication circuit is integrated into a single ASIC that includes modules for managing different vehicle-communication protocols, such as, for example, J1850 PWM, J1850 VPWM, ISO 9141-2, CAN, Keyword 2000, and J170S.

79 Claims, 8 Drawing Sheets

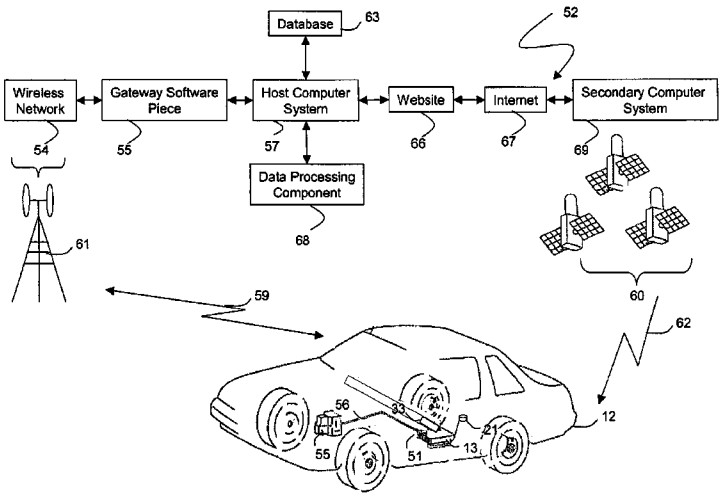

U.S. PATENT DOCUMENTS

5,680,328 A 10/1997 Skorupski et al.
5,732,074 A 3/1998 Spaur et al.
5,737,215 A 4/1998 Schricker et al.
5,754,965 A 5/1998 Hagenbuch
5,758,300 A 5/1998 Abe
5,781,871 A 7/1998 Mezger et al.
5,797,134 A 8/1998 McMillan et al.
5,798,647 A 8/1998 Martin et al.
5,808,907 A 9/1998 Shetty et al.
5,850,209 A 12/1998 Lemke et al.
5,884,202 A 3/1999 Arjomand
5,928,292 A 7/1999 Miller et al.
5,941,918 A 8/1999 Blosser
6,064,970 A 5/2000 McMillan et al.
6,104,988 A 8/2000 Klarer
6,141,611 A 10/2000 Mackey et al.
6,154,658 A 11/2000 Caci
6,167,426 A 12/2000 Payne et al.
6,240,295 B1 5/2001 Kennedy et al.
6,263,268 B1 7/2001 Nathanson
6,285,953 B1 9/2001 Harrison et al.
6,295,492 B1 9/2001 Lang et al.
6,338,152 B1 1/2002 Fera et al.
6,339,745 B1 1/2002 Novik
6,356,205 B1 3/2002 Salvo et al.
6,356,823 B1 3/2002 Iannotti et al.
6,400,701 B2 6/2002 Lin et al.
6,408,232 B1 * 6/2002 Cannon et al. 701/29
6,429,773 B1 8/2002 Schuyler
6,442,460 B1 8/2002 Larson et al.
6,459,988 B1 10/2002 Fan et al.
6,487,494 B2 11/2002 Odinak et al.
6,487,717 B1 11/2002 Brunemann et al.
6,496,777 B2 12/2002 Tennison et al.
6,502,030 B2 12/2002 Hilleary
6,505,106 B1 1/2003 Lawrence et al.
6,507,786 B2 1/2003 Flick
6,522,267 B2 2/2003 Flick
6,526,335 B1 2/2003 Treyz et al.
6,526,460 B1 2/2003 Dauner et al.
6,529,159 B1 3/2003 Fan et al.
6,552,682 B1 4/2003 Fan et al.
6,556,889 B2 4/2003 Rudick et al.
6,556,905 B1 4/2003 Mittelsteadt et al.
6,564,127 B1 5/2003 Bauerle et al.
6,580,916 B1 6/2003 Weisshaar et al.
6,594,579 B1 7/2003 Lowrey et al.
6,604,032 B1 8/2003 Moller
6,604,033 B1 8/2003 Banet et al.
6,604,038 B1 8/2003 Lesesky et al.
6,609,051 B2 8/2003 Fiechter et al.
6,611,686 B1 8/2003 Smith et al.
6,611,739 B1 8/2003 Harvey et al.
6,611,740 B2 8/2003 Lowrey et al.
6,611,755 B1 8/2003 Coffee et al.
6,636,790 B1 10/2003 Lightner et al.
6,675,081 B2 1/2004 Shuman et al.
6,687,587 B2 2/2004 Kacel
6,694,234 B2 2/2004 Lockwood et al.
6,718,425 B1 4/2004 Pajakowski et al.
6,732,031 B1 5/2004 Lightner et al.
6,732,032 B1 5/2004 Banet et al.
6,754,485 B1 6/2004 Obradovich et al.
2001/0016789 A1 8/2001 Staiger
2001/0033225 A1 10/2001 Razavi et al.
2002/0008644 A1 1/2002 Flick
2002/0008645 A1 1/2002 Flick et al.
2002/0016655 A1 2/2002 Joao
2002/0029101 A1 3/2002 Larson et al.
2002/0032505 A1 3/2002 Good
2002/0078458 A1 6/2002 Furon et al.
2002/0133273 A1 9/2002 Lowrey et al.
2002/0140545 A1 10/2002 Nietupski et al.
2002/0143446 A1 10/2002 Rogers et al.
2002/0150050 A1 10/2002 Nathanson
2002/0173889 A1 11/2002 Odinak et al.
2002/0177476 A1 11/2002 Chou
2003/0004624 A1 1/2003 Wilson et al.
2003/0009270 A1 1/2003 Breed
2003/0078722 A1 4/2003 Odinak et al.
2003/0093204 A1 5/2003 Adachi et al.
2003/0130005 A1 7/2003 Weisshaar et al.
2003/0139179 A1 7/2003 Fuchs et al.
2003/0147534 A1 8/2003 Ablay et al.
2003/0231118 A1 12/2003 Kitson
2003/0236596 A1 12/2003 Eisenmann et al.
2004/0023645 A1 2/2004 Olsen et al.
2004/0039502 A1 2/2004 Wilson et al.
2004/0044454 A1 3/2004 Ross et al.
2004/0104842 A1 6/2004 Drury et al.
2004/0196182 A1 10/2004 Unnold

OTHER PUBLICATIONS

U.S. Appl. No. 10/831,952, filed Apr. 26, 2004, Hunt et al.

U.S. Appl. No. 10/841,724, filed May 7, 2004, Lightner et al.

U.S. Appl. No. 09/776,083, filed Feb. 1, 2001, Banet et al.

U.S. Appl. No. 09/776,106, filed Feb. 1, 2001, Lightner et al.

U.S. Appl. No. 09/804,888, filed Mar. 13, 2001, Lowrey et al.

U.S. Appl. No. 09/908,440, filed Jul. 18, 2001, Lightner et al.

U.S. Appl. No. 10/301,010, filed Nov. 21, 2002, Lightner et al.

U.S. Appl. No. 10/447,713, filed May 29, 2003, Lightner et al.

U.S. Appl. No. 10/456,246, filed Jun. 6, 2003, Lowrey et al.

U.S. Appl. No. 10/456,788, filed Jun. 6, 2003, Banet et al.

U.S. Appl. No. 10/614,665, filed Jul. 7, 2003, Lowrey et al.

U.S. Appl. No. 10/615,516, filed Jul. 8, 2003, Lightner et al.

U.S. Appl. No. 10/625,942, filed Jul. 24, 2003, Banet et al.

U.S. Appl. No. 10/626,779, filed Jul. 24, 2003, Lightner et al.

U.S. Appl. No. 10/626,810, filed Jul. 24, 2003, Lowrey et al.

U.S. Appl. No. 10/632,033, filed Jul. 31, 2003, Banet et al.

RD–422061 A; Anonymous; Jun. 10,1999; Abstract, "Using Internet for vehicle diagnostics–enabling using to operate vehicle personal computer to direct web browser to vehicle diagnostics website".

Bary W. Wilson et al., "Modular system for multiparameter in–line machine fluid analysis" (Technology showcase Apr. 3–6, 2000).

Motorola, Inc., "Automotive ISO 9141 Serial Link Driver," 1996, pp. 1–12.

D. John Oliver, Intel Corporation, "Implementing the J1850 Protocol" no date.

* cited by examiner

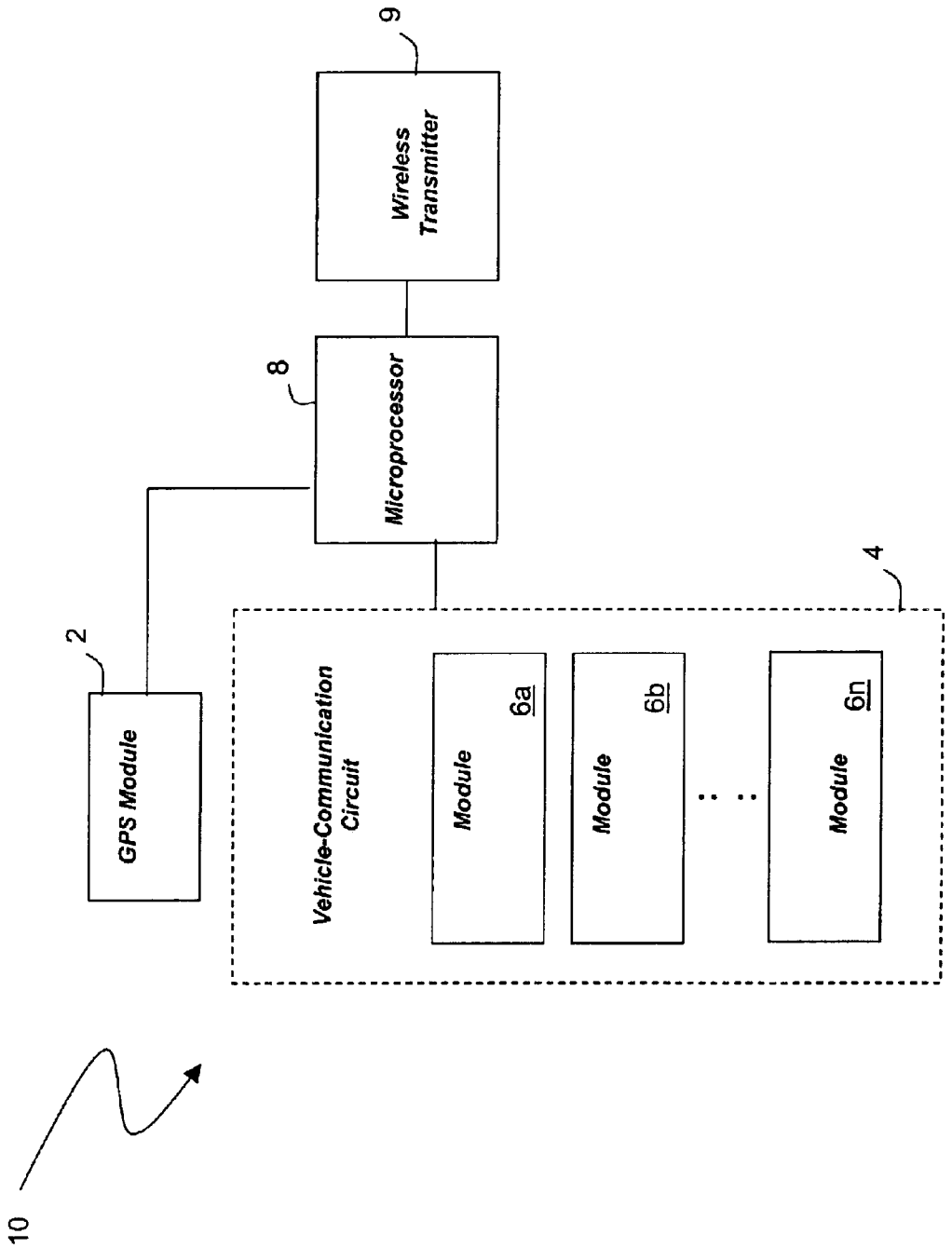
10
2
GPS Module
Vehicle-Communication Circuit
4
Module
6a
Module
6b
Module
6n
8
Microprocessor
9
Wireless Transmitter

Fig. 1A

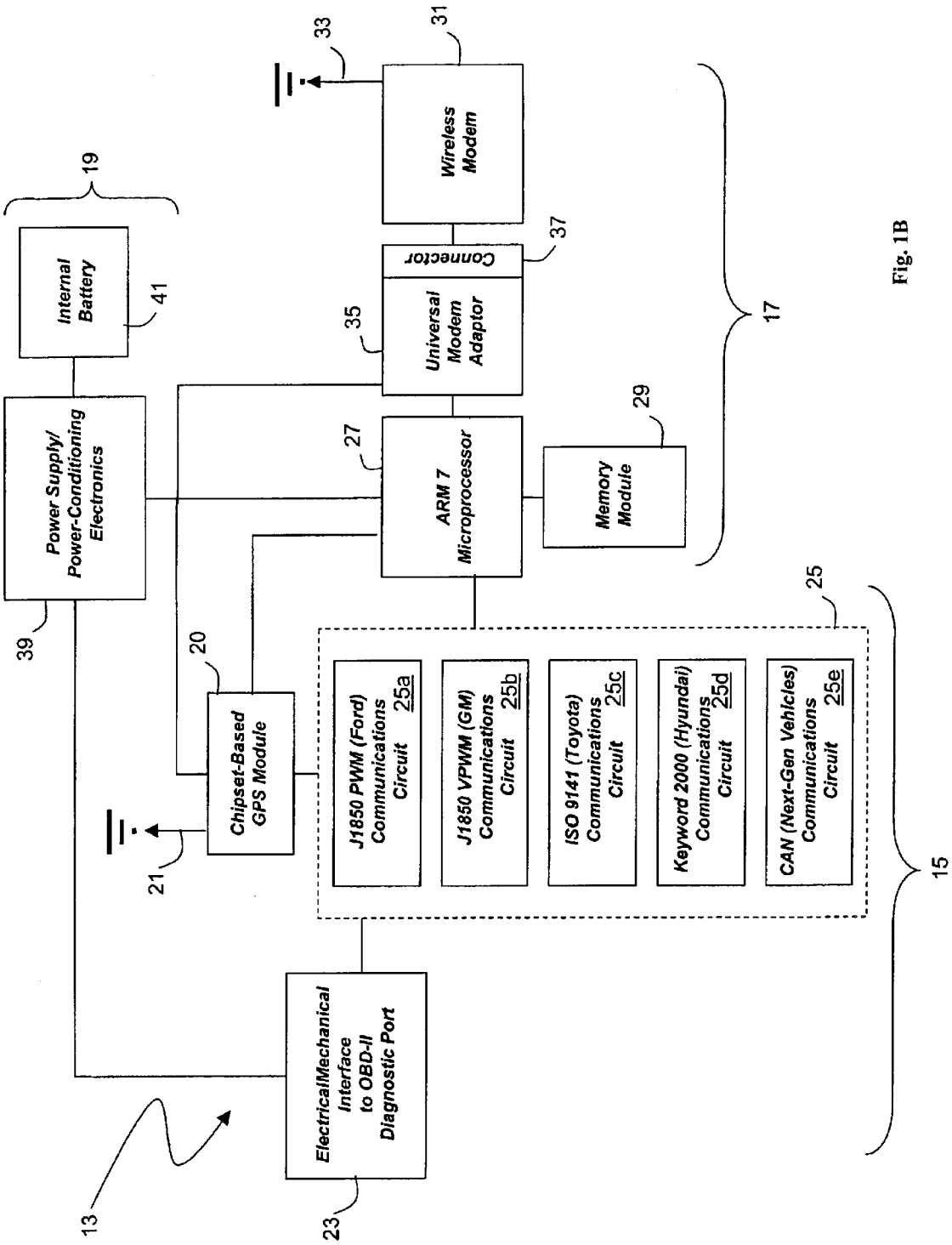
Wireless Modem
Connector
Universal Modem Adaptor
ARM 7 Microprocessor
Memory Module
Internal Battery
Power Supply/ Power-Conditioning Electronics
Chipset-Based GPS Module
J1850 PWM (Ford) Communications Circuit 25a
J1850 VPWM (GM) Communications Circuit 25b
ISO 9141 (Toyota) Communications Circuit 25c
Keyword 2000 (Hyundai) Communications Circuit 25d
CAN (Next-Gen Vehicles) Communications Circuit 25e
ElectricalMechanical Interface to OBD-II Diagnostic Port
13
15
17
19
20
21
23
25
27
29
31
33
35
37
39
41

Fig. 1B

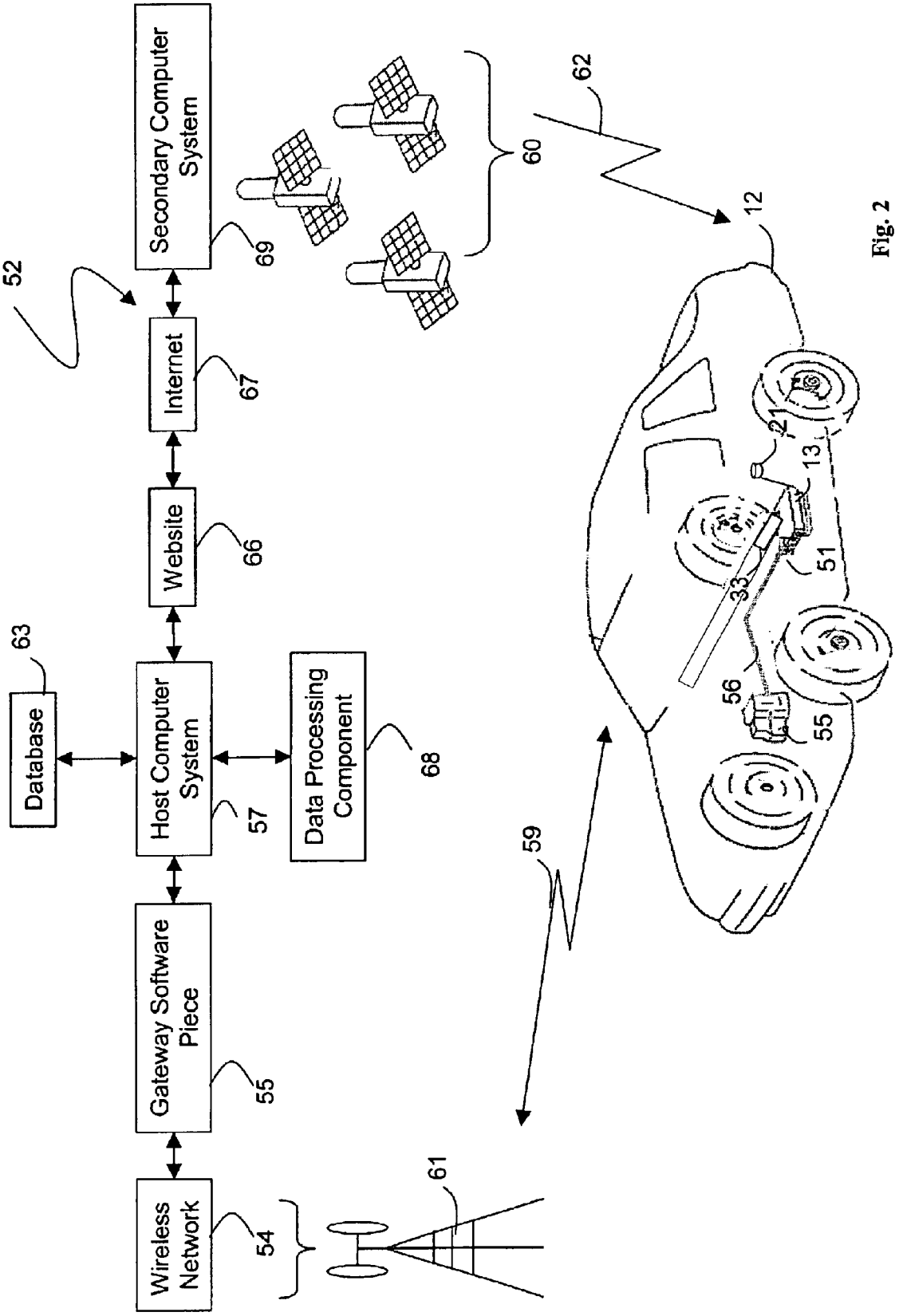
Secondary Computer System
69
52
Internet
67
Website
66
63
Database
Host Computer System
57
Data Processing Component
68
Gateway Software Piece
55
Wireless Network
54
61
60
62
12
21
13
51
33
56
55
59

Fig. 2

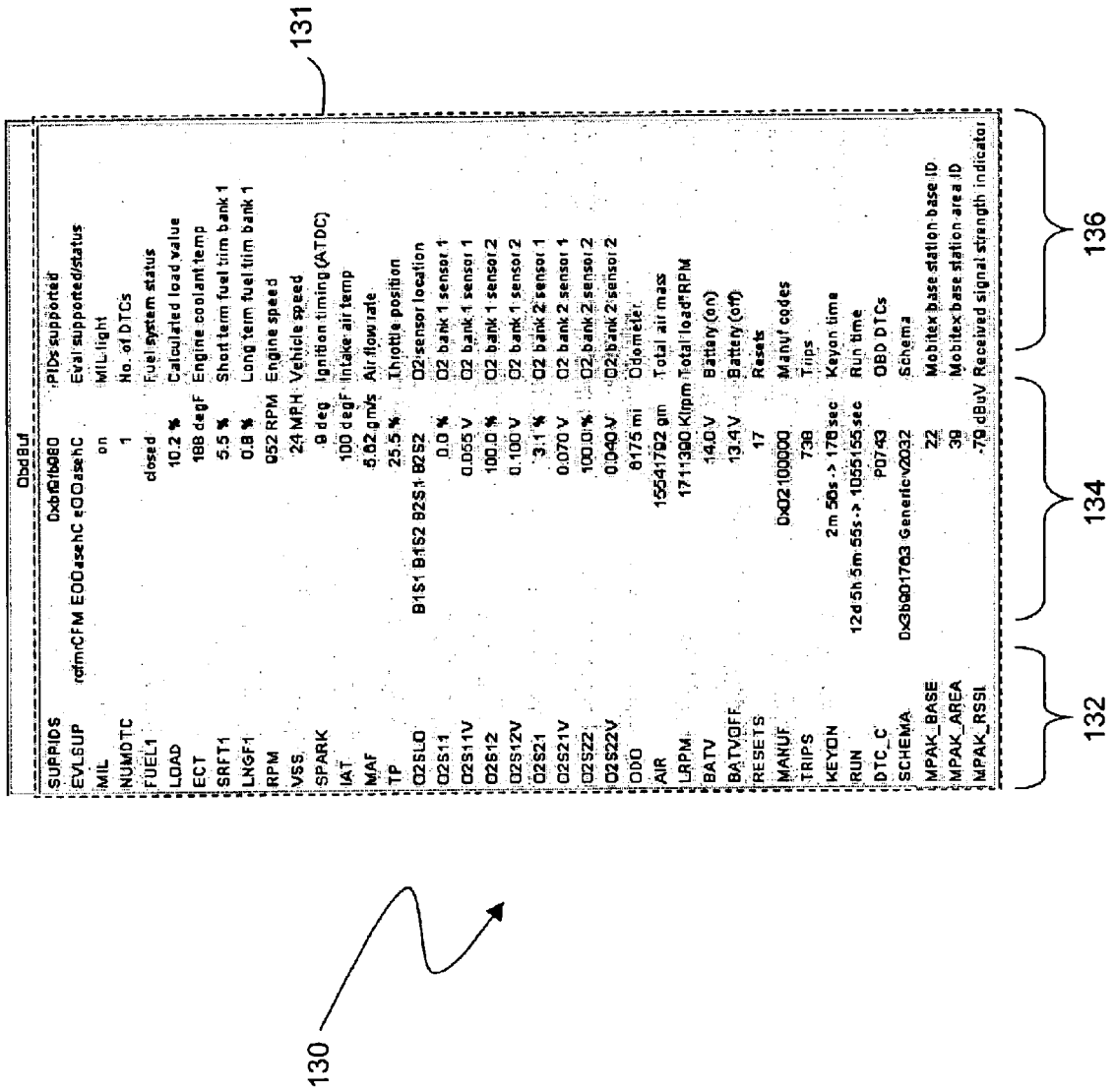
131
130
132
134
136
ObdBuf
SUPPIDS 0xbf9fb980 PIDs supported
EVLSUP rofmrCFM EOOasehC eOOasehC Eval supported/status
MIL on MIL light
NUMDTC 1 No. of DTCs
FUEL1 closed Fuel system status
LOAD 10.2 % Calculated load value
ECT 188 degF Engine coolant temp
SRFT1 5.5 % Short term fuel trim bank 1
LNGF1 0.8 % Long term fuel trim bank 1
RPM 952 RPM Engine speed
VSS 24 MPH Vehicle speed
SPARK 9 deg Ignition timing (ATDC)
IAT 100 degF Intake air temp
MAF 5.62 gm/s Air flow rate
TP 25.5 % Throttle position
O2SLO B1S1 B1S2 B2S1 B2S2 O2 sensor location
O2S11 0.0 % O2 bank 1 sensor 1
O2S11V 0.055 V O2 bank 1 sensor 1
O2S12 100.0 % O2 bank 1 sensor 2
O2S12V 0.100 V O2 bank 1 sensor 2
O2S21 3.1 % O2 bank 2 sensor 1
O2S21V 0.070 V O2 bank 2 sensor 1
O2S22 100.0 % O2 bank 2 sensor 2
O2S22V 0.040 V O2 bank 2 sensor 2
ODO 6175 mi Odometer
AIR 15541792 gm Total air mass
LRPM 1711390 Klrpm Total load*RPM
BATV 14.0 V Battery (on)
BATVOFF 13.4 V Battery (off)
RESETS 17 Resets
MANUF 0x02100000 Manuf codes
TRIPS 738 Trips
KEYON 2m 56s -> 178 sec Keyon time
RUN 12d 5h 5m 55s -> 10551 55 sec Run time
DTC_C P0743 OBD DTCs
SCHEMA 0x3b901763 Generic v2032 Schema
MPAK_BASE 22 Mobitex base station base ID
MPAK_AREA 39 Mobitex base station area ID
MPAK_RSSI -79 dBuV Received signal strength indicator

Fig. 3

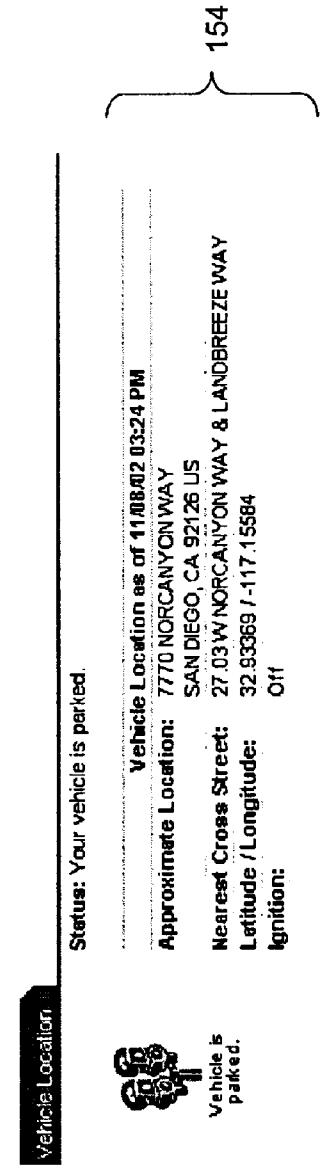
154
Vehicle Location
Status: Your vehicle is parked.
Vehicle Location as of 11/08/02 03:24 PM
Approximate Location: 7770 NORCANYON WAY
SAN DIEGO, CA 92126 US
Nearest Cross Street: 27.03 W NORCANYON WAY & LANDBREEZE WAY
Latitude / Longitude: 32.93369 / -117.15584
Ignition: Off
Vehicle is parked.
150

Fig. 4A

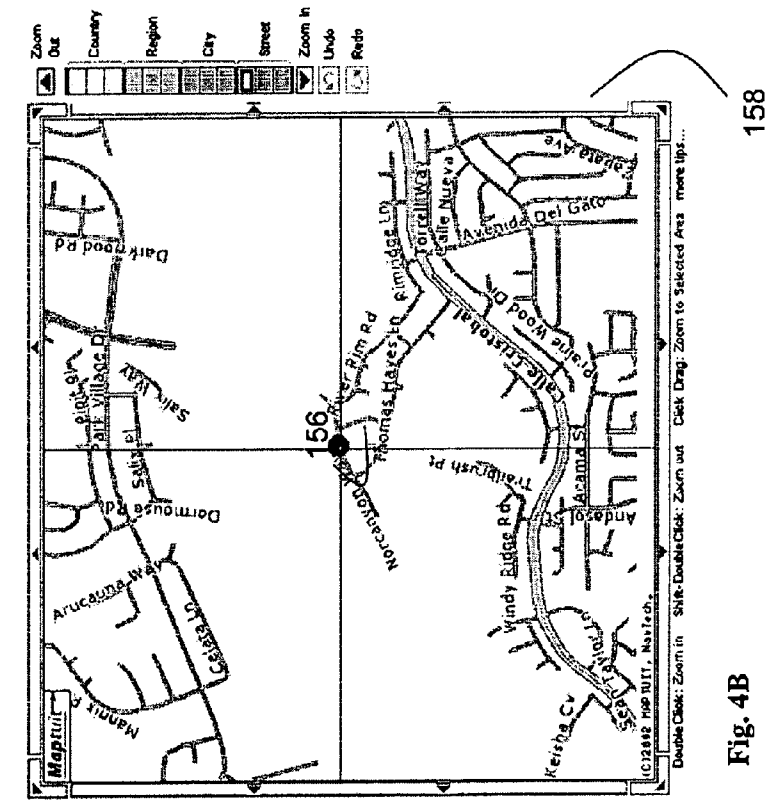
Zoom Out
Country
Region
City
Street
Zoom In
Undo
Redo
Maptuit
Dairy Road
Salix Way
Salix Pl
Dairy Village Dr
Dairmouse Rd
Arucauna Way
Celeste Ln
Manoir Dr
Norcanyon Way
Thomas Hayes Ln
Rim Rd
Trailbush Pl
Windy Ridge Rd
Andoyol St
Acama St
Calle Cristobal
Calle Nueva
Torrelli Way
Avenida Del Gato
Keisha Cv
156
158
Double Click: Zoom in Shift-Double Click: Zoom out Click Drag: Zoom to Selected Area more tips...
152

Fig. 4B

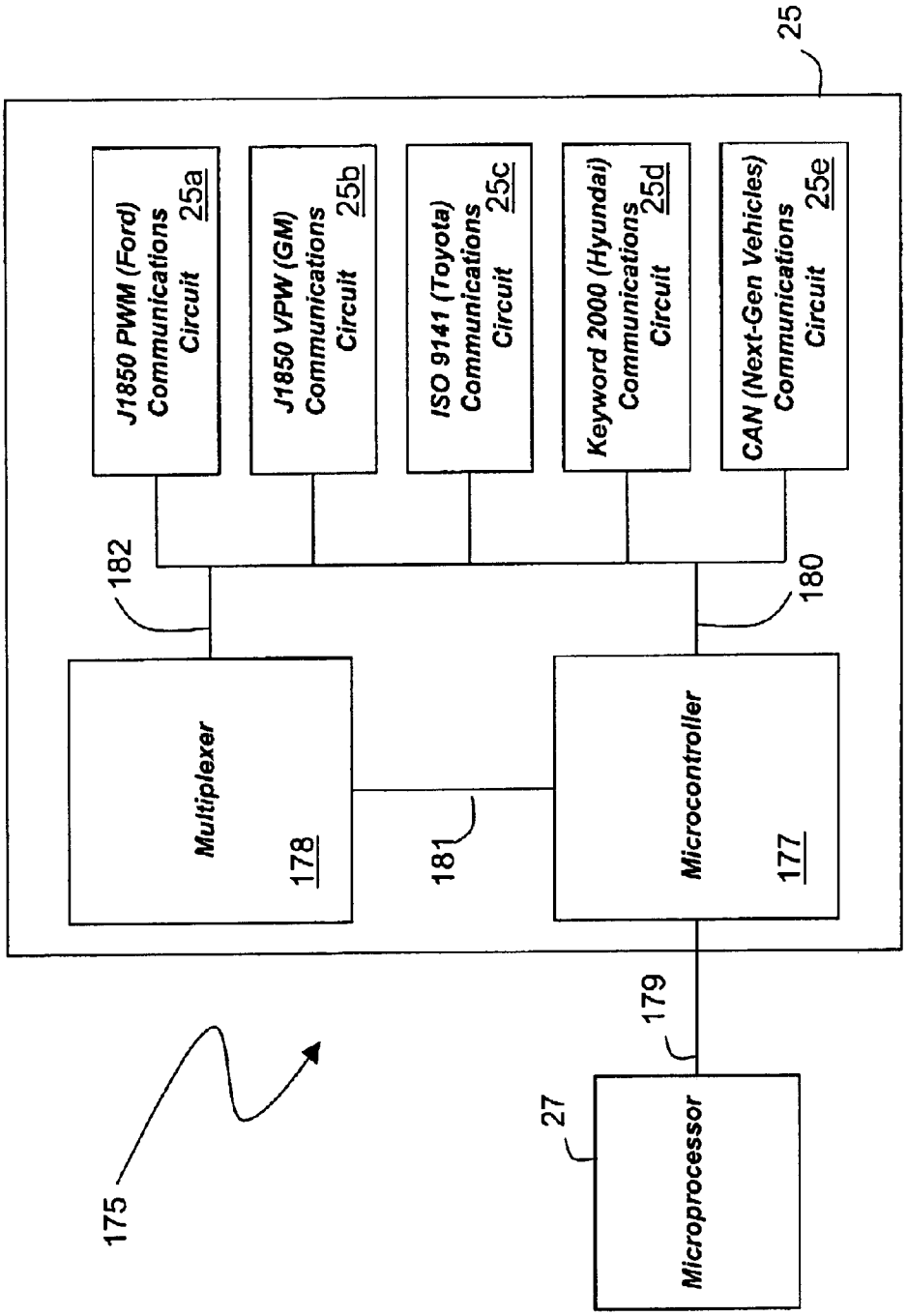
25
J1850 PWM (Ford) Communications Circuit 25a
J1850 VPW (GM) Communications Circuit 25b
ISO 9141 (Toyota) Communications Circuit 25c
Keyword 2000 (Hyundai) Communications Circuit 25d
CAN (Next-Gen Vehicles) Communications Circuit 25e
182
180
Multiplexer 178
181
Microcontroller 177
179
175
27
Microprocessor

Fig. 5

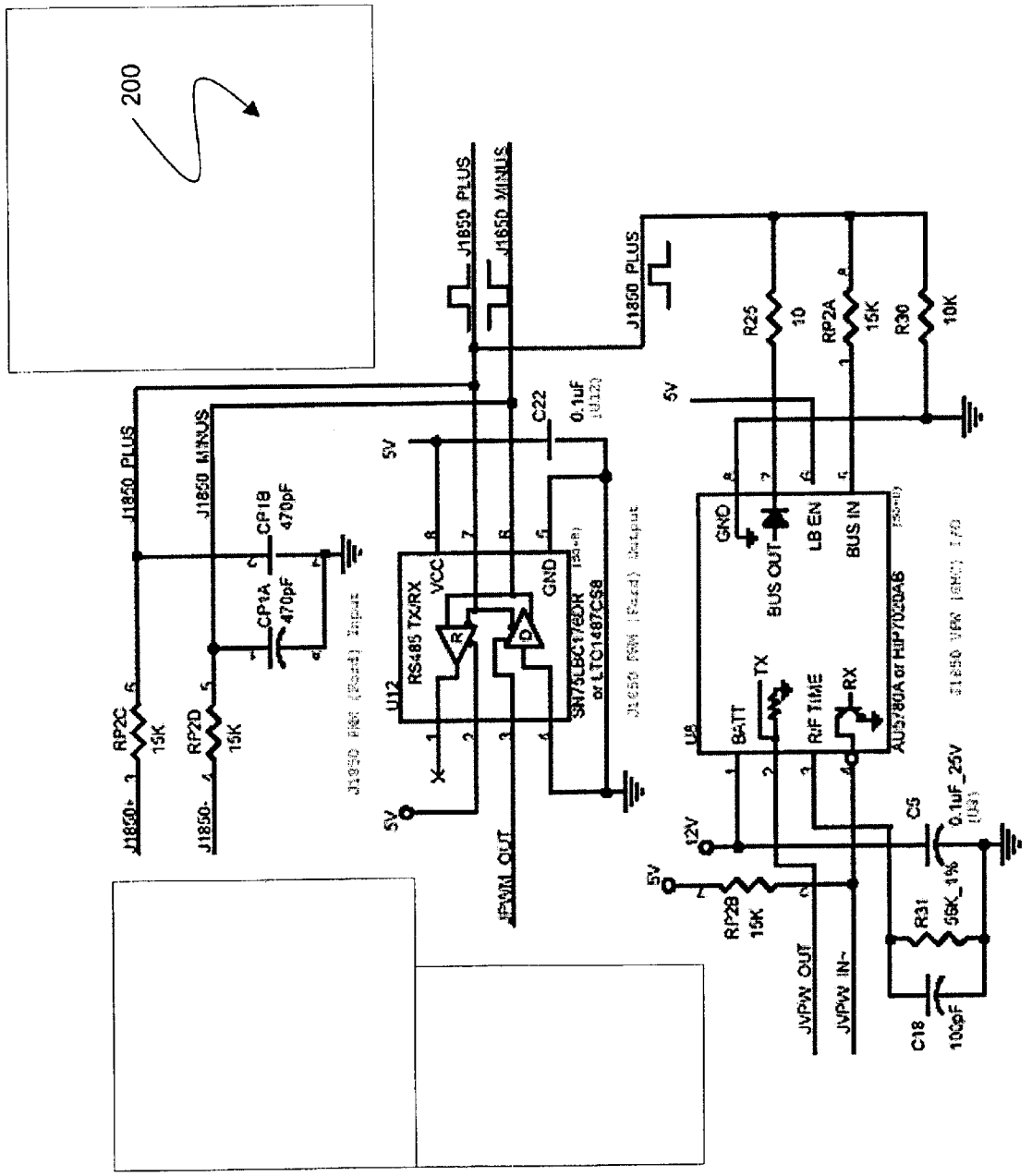
200
J1850 PLUS
J1850 MINUS
J1850+
J1850-
RP2C
15K
RP2D
15K
CP1A
470pF
CP1B
470pF
5V
U12
RS485 TX/RX
VCC
GND
R
D
SN75LBC176DR
or LTC1487CS8
C22
0.1uF
PWM OUT
J1850 PLUS
J1850 MINUS
R25
10
RP2A
15K
R30
10K
GND
BUS OUT
LB EN
BUS IN
U8
BATT
TX
RF TIME
RX
AU5780A or HIP7020A6
12V
RP2B
15K
C5
0.1uF_25V
R31
56K_1%
C18
100pF
JVPW OUT
JVPW IN~

Fig. 6

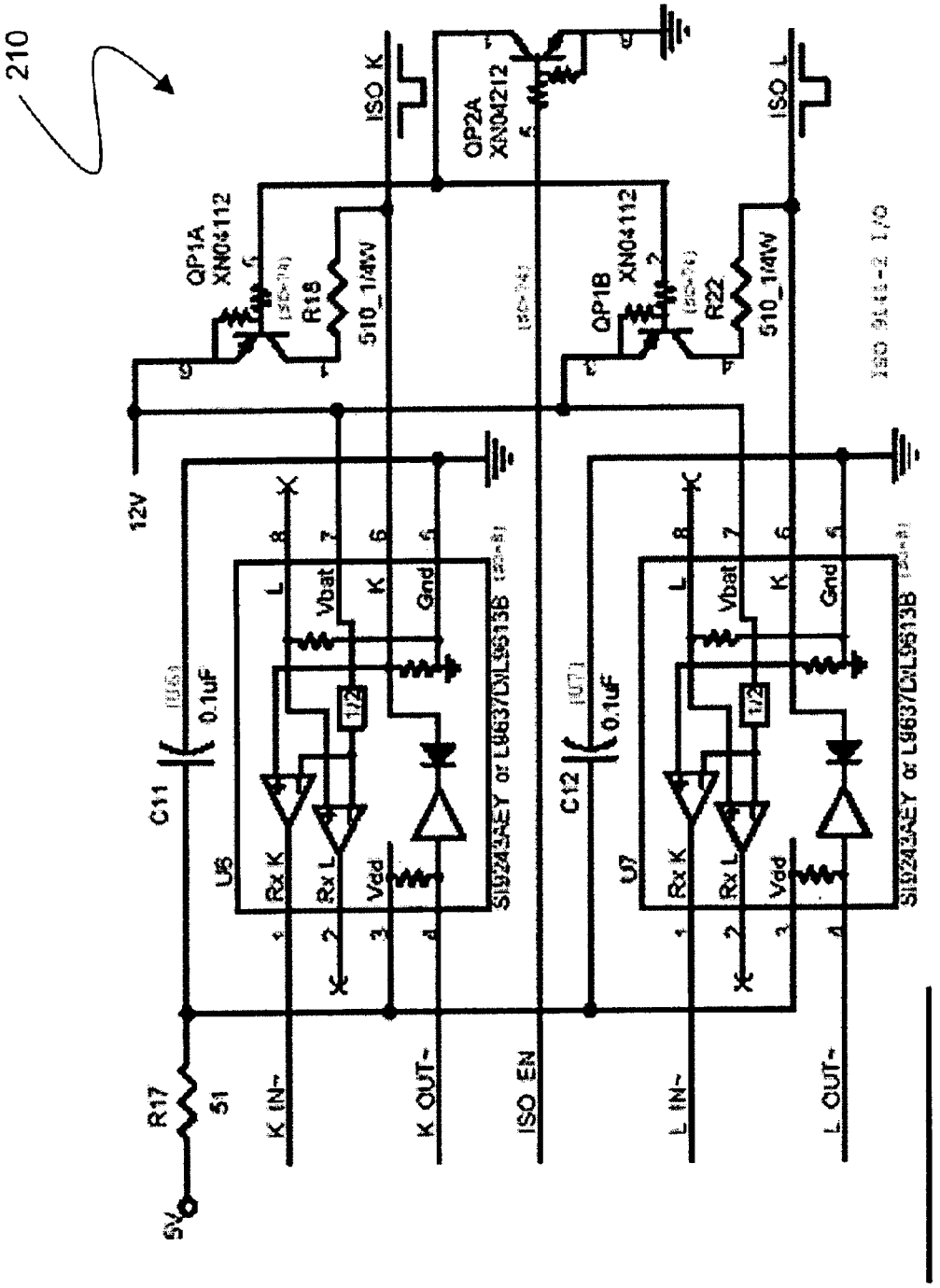
210
12V
5V
R17
51
C11
0.1uF
C12
0.1uF
QP1A
XN04112
QP1B
XN04112
QP2A
XN04212
R18
510_1/4W
R22
510_1/4W
ISO K
ISO L
U6
U7
Rx K
Rx L
Vdd
Vbat
Gnd
1/2
SI9243AEY or L9637/DL9613B
K IN-
K OUT-
ISO EN
L IN-
L OUT-

Fig. 7

SMALL-SCALE, INTEGRATED VEHICLE TELEMATICS DEVICE

BACKGROUND

1. Field

Embodiments of the present invention relate generally to vehicle telematics. More specifically, embodiments relate to wireless, internet-based systems that collect, transmit, and analyze diagnostic and location-based data from a motor vehicle.

2. Description of Related Art

Some vehicles include global positioning systems ('GPSs'). A conventional GPS features an antenna that receives signals from orbiting satellites and a chipset that processes these signals to calculate a GPS 'fix'. The fix features data such as a vehicle's latitude, longitude, altitude, heading, and velocity. The fix describes the vehicle's location with a typical accuracy of about 10 meters or better.

Light-duty automobiles and trucks beginning with model year 1996 include on-board diagnostic (OBD-II) systems as mandated by the Environmental Protection Agency (EPA). OBD-II systems monitor the vehicle's electrical, mechanical, and emissions systems and generate data that are processed by a vehicle's engine control unit (ECU) to detect malfunctions or deterioration in the vehicle's performance. The data typically include parameters such as vehicle speed (VSS), engine speed (RPM), engine load (LOAD), and mass air flow (MAF). The ECU can also generate diagnostic trouble codes (DTCs), which are 5-digit codes (e.g., 'P0001') indicating electrical/mechanical problems with the vehicle. Most vehicles manufactured after 1996 include a standardized, serial 16-cavity connector, referred to herein as an 'OBD-II connector', that makes these data available. The OBD-II connector serially communicates with the vehicle's ECU and typically lies underneath the vehicle's dashboard.

Conventional GPSs can be combined with systems for collecting the vehicle's OBD-II diagnostic data to form 'telematics' systems. Such telematics systems typically include (1) a microprocessor that runs firmware that controls separate circuits that communicate with different vehicle makes (e.g., Ford, GM, Toyota) to collect OBD-II data; (2) a GPS module; and (3) a separate wireless transmitter module that transmits the GPS and OBD-II data.

BRIEF DESCRIPTION OF THE DRAWINGS

FIG. **1**A is a schematic drawing of a wireless appliance according to an embodiment of the present invention.

FIG. **1**B is a schematic drawing of a wireless appliance according to an embodiment of the present invention featuring an integrated antennae and custom ASICs for power management, OBD-II communication, GPS, and a wireless transmitter.

FIG. **2** is a schematic drawing of a vehicle featuring a wireless appliance that communicates with a GPS, a wireless communication network, and an Internet-accessible web page according to an embodiment of the present invention.

FIG. **3** is a screen capture of a web page that displays a vehicle's diagnostic data monitored by the wireless appliance of FIG. **1**B according to an embodiment of the present invention.

FIGS. **4**A and **4**B are web pages displaying, respectively, screen captures of a vehicle's numerical latitude and longitude and a map showing the vehicle's location monitored by the wireless appliance of FIG. **1**B according to an embodiment of the present invention.

FIG. **5** is a schematic drawing of an ASIC used for the vehicle-communication circuit of FIG. **1**B according to an embodiment of the present invention.

FIG. **6** is a logic diagram for the J1850 VPWM and J1850 PWM circuits used in the ASIC of FIG. **5** according to an embodiment of the present invention.

FIG. **7** is a logic diagram for the ISO 9141-2 circuit used in the ASIC of FIG. **5** according to an embodiment of the present invention.

DETAILED DESCRIPTION

The following description refers to the accompanying drawings that illustrate certain embodiments of the present invention. Other embodiments are possible and modifications may be made to the embodiments without departing from the spirit and scope of the invention. Therefore, the following detailed description is not meant to limit the present invention. Rather, the scope of the present invention is defined by the appended claims.

Embodiments of the present invention provide a small-scale, wireless, internet-based system for monitoring and analyzing a vehicle's GPS and diagnostic data. Specifically, embodiments provide a system that supports the above-mentioned functions using a wireless appliance based on an integrated, silicon-based architecture. The architecture features an application-specific integrated circuit ('ASIC') for communicating with multiple types of OBD-II systems. It also includes a GPS system and wireless transmitter that use antennae that are integrated into the wireless appliance. This results in a small, compact device that can be easily installed in a vehicle in a matter of minutes.

The wireless appliance monitors location and diagnostic data to provide services such as roadside assistance to a disabled vehicle or recovery of a stolen vehicle. In a related implementation, the appliance provides a GPS-based system for alerting a vehicle's owner that someone other than the owner has moved the vehicle (e.g., the vehicle is stolen or towed).

More specifically, in one aspect, the invention provides a wireless appliance for monitoring a vehicle that includes: (1) a microprocessor, (2) a vehicle-communication circuit; (3) a GPS module; and (4) a wireless transmitter. The wireless transmitter receives and transmits location-based data generated by the GPS module and diagnostic data collected by the vehicle-communication circuit. The vehicle-communication circuit is integrated into a single ASIC that includes modules for managing different vehicle-communication protocols, e.g. J1850 PWM (a protocol for Ford Vehicle), J1850 VPWM (General Motors), ISO 9141-2 (Toyota and other Japanese makes), CAN (e.g. ISO-15765; a next-generation protocol), Keyword 2000 (Hyundai, Mercedes), and J1708 (for medium and heavy-duty trucks, such as trucks made by Volvo, Kenworth, CAT, Hino). Each protocol is described in more detail below.

In one embodiment, the wireless appliance includes a multiplexing circuit that provides electrical communication between the microprocessor and one of the modules. The multiplexing circuit, for example, can switch electrical communication from one module to another. In other embodiments, the vehicle-communication circuit includes a microcontroller that connects to the microprocessor using an asynchronous serial connection.

The microprocessor may run firmware that determines the vehicle-communication protocol of a host vehicle. Once this

is determined, the microprocessor selects the appropriate module in the vehicle-communication circuit that supports the vehicle-communication protocol.

In other embodiments, the wireless appliance includes a GPS antenna in electrical contact with the GPS module; a radio antenna in electrical contact with the wireless transmitter; and a single housing that houses the GPS antenna, the radio antenna, and all the other components in the wireless appliance.

The wireless appliance can also include an internal battery. In this embodiment, the appliance receives power from the vehicle's standard 12-volt battery and uses the internal battery as a 'back up' power supply in case this power is interrupted. In another embodiment, the appliance includes a single chipset that includes both the GPS module and the wireless transmitter.

In another aspect of the invention, the wireless appliance features a substrate (e.g., a printed circuit board) that supports the microprocessor, the vehicle-communication circuit, a GPS module and its antenna, and the wireless transmitter and its antenna.

In another aspect of the invention, the wireless appliance features a microprocessor that controls and processes data from both the vehicle-communication circuit and the GPS module. In this case, the GPS module receives GPS signals from an antenna and generates data in response. The GPS module then sends the data to the microprocessor to calculate location-based data. In this embodiment, both the GPS and radio antennae may be housed with the wireless appliance in a single enclosure. In other embodiments, a single chipset or ASIC includes both the GPS module and the wireless transmitter.

In another embodiment, the wireless appliance features a mechanical adaptor based on a connector that powers and provides a data link (e.g. a serial connection) to a plurality of wireless transmitters that each operate on different wireless networks. For example, the mechanical adaptor powers and provides a data link to wireless transmitters operating on terrestrial wireless networks such as CDMA, GSM, GPRS, AMPS, Mobitex, and DataTac, and satellite networks such as ORBCOMM. In this embodiment, the wireless appliance only hosts a single wireless transmitter at any time; this transmitter can then be replaced with a different device, operating on a different network, at a later time. The microprocessor is configured to determine the wireless network associated with the transmitter, and then direct a power-conditioning circuit to supply the correct power to the mechanical adaptor.

In another aspect, the invention provides a single ASIC that features (1) a microprocessor; (2) a vehicle-communication circuit containing multiple vehicle-communication modules; (3) a GPS module; and (4) a wireless transmitter. In embodiments, the ASIC additionally includes a multiplexing circuit configured to switch electrical communication from one vehicle-communication module to another.

In other embodiments of the present invention, a monitorable vehicle is provided. The vehicle may include, for example, an engine, transmission, braking mechanism, electrical system, on-board diagnostic system, and wireless appliance. The on-board diagnostic system is configured to query data relating to the vehicle, for example, related to the engine, transmission, braking mechanism, and/or electrical system. In some embodiments, the wireless appliance includes a substrate, a microprocessor supported by the substrate, a vehicle-communication circuit, a GPS module, and a wireless transmitter. The vehicle-communication circuit is in electrical communication with the microprocessor, includes modules that each manage a vehicle-communication protocol, and is interfaced with the on-board diagnostic system. The GPS module is in electrical communication with the microprocessor and includes a GPS antenna connected to the substrate. The wireless transmitter is configured to receive and transmit data generated by the GPS module and collected by the vehicle-communication circuit, and includes a radio antenna connected to the substrate.

The invention has many advantages. In particular, wireless, real-time transmission and analysis of GPS and diagnostic data, followed by analysis and display of these data using an Internet-hosted web site, makes it possible to characterize the vehicle's performance and determine its location in real-time from virtually any location that has Internet access, provided that the vehicle being tested includes the below-described wireless appliance. These data are complementary and, when analyzed together, can improve conventional services such as roadside assistance, vehicle theft notification and recovery, and remote diagnostics. For example, the data can indicate a vehicle's location, its fuel level and battery voltage, and whether or not it has any active DTCs. With these data a call center can dispatch a tow truck with the appropriate materials (e.g., extra gasoline or tools required to repair a specific problem) to repair the vehicle accordingly.

The primary electrical components of certain embodiments of the wireless appliance, i.e. circuitry for OBD-II communication, power management, battery, GPS, and wireless transmission, may be each integrated into a unique custom ASIC and housed on a single substrate. Likewise, the antennae for both the GPS and wireless transmitter may be integrated into the substrate. As such, the wireless appliance may take the form of a stand-alone unit that can be easily installed and hidden in the host vehicle. This reduces installation costs of the appliance and additionally makes it more difficult to disable when stealing a vehicle.

Moreover, integrating multiple conventional circuits into custom ASICs reduces manufacturing costs and increases reliability of the appliance. Specifically, the ASICs replace conventional discrete circuit components (e.g., resistors and capacitors) that are expensive and time-consuming to fabricate on a printed circuit board, and that tend to fail over time due to heat and vibration. This ultimately increases the cost effectiveness and reliability of the wireless appliance.

A wireless appliance according to embodiments of the present invention can also be easily transferred from one vehicle to another, or easily replaced if it malfunctions. No additional wiring is required to install the appliance; it is powered through the vehicle's OBD-II connector (assuming that such a connector is present in the vehicle) and using a back-up battery. The appliance can also be connected directly to a vehicle's electrical system, thus making it unnecessary to even use an OBD-II connector.

Embodiments of the present invention may be useful in a wide range of vehicles. Examples of such vehicles include automobiles and trucks, as well as commercial equipment, heavy trucks, power sport vehicles (e.g., motorboats, motorcycles, all-terrain vehicles, snowmobiles, jet skis, and other powered sport vehicles), collision repair vehicles, marine vehicles, and recreational vehicles. Further, embodiments may be useful in the vehicle care industry.

Although OBD-II diagnostic systems are disclosed herein for illustrative purposes, it is to be appreciated that embodiments of the present invention may be employed with other systems.

FIG. **1**A is a schematic drawing of a small-scale wireless appliance **10** according to an embodiment of the present invention. The wireless appliance **10** includes a microprocessor **8**, a vehicle-communication circuit **4**, a GPS module **2**, and a wireless transmitter **9**. The wireless appliance **10** may be installed in a vehicle.

The GPS module **2** generates location-based data.

The vehicle-communication circuit **4** collects diagnostic data relating to the vehicle. In an embodiment, the vehicle-communication circuit **4** includes modules **6***a*, **6***b*, . . . , **6***n* for managing different vehicle-communication protocols, such as, for example, J1850 PWM, J1850 VPWM, ISO 9141-2, CAN, Keyword 2000, and J1708. As such, the vehicle-communication circuit **4** may collect data from any vehicle that utilizes a protocol among those supported by modules **6***a*, **6***b*, . . . , **6***n*. In an implementation, the vehicle-communication circuit is integrated into a single ASIC.

The microprocessor **8** is in electrical communication with the GPS module **2**, the vehicle-communication circuit **4**, and the wireless transmitter **9**.

The wireless transmitter **9** receives and transmits location-based data generated by the GPS module **2** and diagnostic data collected by the vehicle-communication circuit **4**.

FIG. **1**B shows a small-scale wireless appliance **13** according to an embodiment of the present invention that monitors diagnostic and location-based data from a host vehicle and wirelessly transmits these data to an Internet-accessible website. The wireless appliance **13** features: (1) a data-generating portion **15** that generates both diagnostic and location-based data; (2) a data-processing portion **17** that processes and wirelessly transmits the diagnostic and location-based data; and (3) a power-management portion **19** that supplies power to each circuit element in the appliance. The circuit elements in each portion **15**, **17**, **19**, described in more detail below, are each integrated into small-scale, silicon-based microelectronic devices (e.g., ASICs). This means that the entire wireless appliance **13** can be incorporated into a single 'chip set', described by a reference design, thereby reducing its size, manufacturing costs, and potential post-installation failures.

The data-generating portion **15** features a chipset-based GPS module **20** that receives wireless signals from orbiting GPS satellites through an integrated GPS antenna **21**. To reduce cabling in the wireless appliance **13** and costs associated with its installation, the integrated GPS antenna **21** may attach to a metal ground plane within the appliance. Once the antenna **21** receives signals from at least three satellites, the GPS module **20** processes them to calculate a GPS 'fix' that includes the host vehicle's location-based data, e.g. latitude, longitude, altitude, heading, and velocity. The GPS module **20** calculates location-based data at a programmable interval, e.g. every minute.

The data-generating portion **15** communicates with the host vehicle through an electrical/mechanical interface **23** that connects to the vehicle's 16-cavity OBD-II diagnostic connector. The diagnostic connector, typically located underneath the vehicle's steering column, provides direct access to diagnostic data stored in memory in the vehicle's ECU. The entire vehicle-communication circuit **25** is integrated into a single ASIC and manages communication through the electrical/mechanical interface **23** with separate modules **25***a*–**25***e* for different vehicle buses (e.g., those featured in Ford, GM, Toyota). Each module **25***a*–**25***e* is a separate integrated circuit within the vehicle-communication circuit **25**. FIGS. **5**–**7**, described in detail below, show detailed schematic drawings of embodiments of both the vehicle-communication circuit and some of the modules included therein. The modules feature circuit elements that communicate according to vehicle-specific protocols, described below with reference to Tables 1 and 2.

The vehicle-communication circuit additionally includes logic that detects the communication protocol of the host vehicle, and then selects this protocol to communicate with the vehicle. Once the protocol is selected, the electrical/mechanical interface **23** receives diagnostic data from the vehicle and passes it through the vehicle-communication circuit **25** to the data-processing portion **17** for analysis.

It is to be appreciated that the specific protocols supported by the vehicle-communication circuit **25** of FIG. **1**B are merely examples. In some embodiments, more, fewer, or other protocols may be supported by a vehicle-communication circuit.

The data-processing portion **17** features a 16-bit ARM7 microprocessor **27** that receives and processes diagnostic data from the data-communication circuit **25** and location-based data from the GPS module **20**. For example, the microprocessor **27** can process diagnostic data describing the host vehicle's speed, mass air flow, and malfunction indicator light to calculate, respectively, an odometer reading, fuel efficiency, and emission status.

The microprocessor **27** additionally stores firmware and pre and/or post-processed diagnostic data in a memory module **29**. The memory module **29** additionally stores an operating system (e.g., Linux) that runs on the microprocessor **27**. During operation, the memory module can additionally function as a 'data logger' where both diagnostic and location-based data are captured at high rates (e.g., every 200 milliseconds) and then read out at a later time.

With firmware the microprocessor **27** formats the diagnostic and location-based data into separate packets and serially transfers these packets through a universal modem adaptor **35** to a wireless modem **31**. Each formatted packet includes, e.g., a header that describes its destination and the wireless modem's numerical identity (e.g., its 'phone number') and a payload that includes the data. The wireless modem **31** operates on a wireless network (e.g., CDMA, GSM, GPRS, Mobitex, ORBCOMM) and transmits the packets through an antenna **33** to the network. The antenna **33** is typically embedded into a circuit board or mechanical housing that supports the wireless modem **31**. Once transmitted, the packets propagate through the network, which delivers them to an Internet-accessible website, for example, as described in more detail with reference to FIG. **2**.

The universal modem adaptor **35** provides power, mechanical support, and a serial interface to the wireless modem **31** through a multi-pin mechanical connector **37**. The connector's pin configuration powers and supports a variety of different modems that, in turn, can operate on different wireless networks. One modem (e.g. a Mobitex modem) can be easily replaced with another (e.g., a satellite modem) that has better wireless coverage within a particular region. The firmware running on the microprocessor **27** is configured to recognize the wireless modem **31** attached to the universal modem adaptor **35** (using, e.g., the modem's electronic serial number) and format outgoing packets accordingly. In this way the wireless appliance can be easily configured to operate on different wireless networks throughout the world.

The power-management portion **19** of the wireless appliance **13** features a power supply and power-conditioning

electronics **39** that receive 12 volts DC power from the electrical/mechanical interface **23** and, in turn, supply regulated DC power to circuit elements in the data-generating **15** and data-processing **17** portions. Typically the 12 volts from the vehicle's battery is switched to a lower voltage, e.g., 3.3–5 volts, to power the circuit elements. The mechanical interface **23**, in turn, attaches to the host vehicle's diagnostic connector, which receives power directly from the vehicle's standard 12-volt battery. An internal battery **41** connects to the power supply and power-conditioning electronics **39** and supplies power in case the wireless appliance is disconnected from the vehicle's power-supplying diagnostic connector. Additionally, the power supply and power-conditioning electronics **39** continually recharge the internal battery **41** so that it can supply back-up power even after extended use.

FIG. **2** shows a schematic drawing of an Internet-based system **52** that uses the above-described wireless appliance **13**, or related embodiments thereof, to monitor both diagnostic and location-based data from a host vehicle **12**. The wireless appliance **13** connects to the vehicle's OBD-II diagnostic connector **51** and collects diagnostic data by querying the vehicle's ECU **55** through a cable **56**. In response to a query, the ECU **55** retrieves data stored in its memory and sends it along the same cable **56** to the wireless appliance **13**. The GPS module in the wireless appliance **13** measures the vehicle's location-based data using an antenna **21** that is typically integrated into the wireless appliance or hidden within the vehicle (e.g., under the vehicle's dashboard). To calculate the vehicle's location, the antenna **21** collects signals **62** from an overlying constellation of GPS satellites **60** and sends these signals to the GPS module for processing.

During operation, the wireless appliance **13** formats the diagnostic and GPS data in separate data packets and transmits these packets through an embedded radio antenna **33** over an airlink **59** to a base station **61** included in a wireless network **54**. As described above, the embedded antenna **33** is typically included in a mechanical housing or circuit board used in the wireless appliance. The data packets propagate through the wireless network **54** to a gateway software piece **55** running on a host computer system **57**. Using the gateway software piece **55**, the host computer system processes and stores data from the data packets in a database **63**. The host computer system **57** additionally may host a web site **66** that, once accessed, displays the data. A user (e.g. an individual working for a call center) accesses the web site **66** with a secondary computer system **69** through the Internet **67**.

FIG. **3** shows a sample web page **130** included in the website of FIG. **2**, for example, that displays diagnostic data collected from the ECU of a particular vehicle as described above. The web page **130** includes a set of diagnostic data **131** and features fields listing, for example, an acronym **132**, value and units **134**, and brief description **136** for each datum. During typical operation, the wireless appliance automatically transmits sets of diagnostic data **131** like the one shown in FIG. **3** at periodic intervals, e.g. every 20 to 40 minutes. The wireless appliance can also transmit similar data sets at random time intervals in response to a query from the host computer system (sometimes called a 'ping').

FIGS. **4**A and **4**B show sample web pages **150**, **152** included in the website of FIG. **2**, for example, that display, respectively, GPS data **154** and a map **158** that together indicate a vehicle's location **156**. In this case, the GPS data **154** include the vehicle's latitude, longitude, a 'reverse geocode' of these data indicating a corresponding street address, the nearest cross street, and a status of the vehicle's ignition (i.e., 'on' or 'off' and whether or not the vehicle is parked or moving). The map **158** displays these coordinates in a graphical form relative to an area of, in this case, a few square miles. In typical embodiments, the web pages **150**, **152** are rendered each time the GPS data are periodically transmitted from a vehicle (e.g., every 1–2 minutes) and received by the data-processing component of the website. Both the map and a database that translates the latitude and longitude into a reverse geocode are accessible though an Internet-based protocol, e.g. XML, Web Services, or TCP/IP. Companies such as MapTuit, MapQuest, and NavTech support software that provides such maps and databases.

As described above, the vehicle-communication circuit **25** in FIG. **1**B is a custom ASIC that features individual modules for managing communication protocols for different vehicles. Table 1, below, summarizes protocols for J1850 PWM/VPWM and ISO 9141-2, their baud rate and pulse width specifications, and a representative sample of vehicles that support the protocol.

TABLE 1

Communication Protocols for Vehicles

Protocol	Vehicle	Baud Rate (kbits/s)	Pulse Width
J1850 PWM	Ford	41.6	constant
J1850 VPWM	GM, Chrysler	10.4	variable
ISO 9141-2	Toyota, Chrysler	10.4	constant

These protocols are also described in detail in the following publications listed in Table 2.

TABLE 2

References Describing Vehicle-Communication Protocols

Protocol	J1850 PWM and J1850 VPWM
Reference	'Implementing the J1850 Protocol'
Source	ftp://download.intel.com/design/intarch/papers/j1850 wp.pdf
Protocol	ISO 9141-2
Reference	'Automotive ISO 9141 Serial Link Driver'
Source	http://roadrunneresng.dibe.unige.it/EESS.Kit/Software%20e%20documentazione/Data%20sheets%20componenti%20elettronici/IC%20Analogici/mc33199rev0f.pdf

FIG. **5** shows a schematic diagram of an ASIC **175** and microprocessor **27** according to an embodiment of the present invention. ASIC **175** is used for the vehicle communication circuit **25** that connects to the host vehicle through a mechanical/electrical interface to the vehicle's OBD-**11** diagnostic port. The ASIC **175** features separate modules **25***a–e* that individually support communication protocols for J1850 VPWM, J1850 PWM, ISO-9141, CAN (e.g., ISO-15765), Keyword 2000, and J1708, for example. The ASIC **175** includes an internal microcontroller **177** that connects to an external microprocessor (e.g., the ARM7 microprocessor **27** in FIG. **1**B) through a data link **179**, e.g. an asynchronous serial channel. The microcontroller **177** additionally connects to and receives data from each vehicle-communication module **25***a–e* through a first set of general-purpose input/output (GPIO) pins **180**. A second set **181** of GPIO pins in the microcontroller control a multiplexer **178**. The multiplexer **178** contains a third set of pins **182** that switch between the five vehicle-communication modules **25***a–e*.

During operation, the microprocessor **27** determines the communication protocol of the host vehicle, such as by

monitoring the baud rate and pulse width characteristics of the host vehicle's communication protocol through the mechanical/electrical interface. In another embodiment, the microprocessor determines the communication protocol of the host vehicle by testing each protocol in an effort to establish communication. The microprocessor then selects the protocol that successfully communicated with the vehicle. In still another embodiment, the microprocessor is configured to test outputs of a diagnostic system in the host vehicle. For example, the microprocessor may test whether respective output pins of a diagnostic connector are active. Certain communication protocols use a predetermined subset of output pins for communication. Therefore, the presence of electrical signals on a particular subset of output pins may indicate that the host vehicle is utilizing the vehicle-communication protocol associated with that particular subset.

After the host vehicle's vehicle-communication protocol is determined, the microprocessor **27** then communicates the protocol to the microcontroller **177** over the data link **179**. Using two pins in the third set of pins **182**, the multiplexer **178** selects one of the five modules **25***a–e* to communicate with the host vehicle. A third pin in the third set of pins **182** either enables a module by providing power, or disables a module by removing power. In this way, the multiplexer **178** effectively selects the module that is used to communicate with the host vehicle.

FIGS. **6** and **7** show, respectively, logic diagrams **200**, **210** used for vehicle-communication modules supporting the J1850 PWM/VPWM and ISO 9141-2 protocols described above according to embodiments of the present invention. As indicated above in FIG. **5**, these logic diagrams represent circuits that function as individual modules within the data-communication circuit and are integrated directly into the ASIC.

Other embodiments are also within the scope of the invention. In particular, logic diagrams and corresponding circuits other than those described above can be used to implement protocols such as J1850 PWM/VPWM, ISO 9141-2, CAN, Keyword 2000, and J1708. These protocols can be implemented using integrated silicon-based solutions (e.g., a custom ASIC), or using transistors or conventional circuit elements. Similarly, hardware architectures other than that described above can be used for a wireless appliance such as wireless appliance **13**. For example, the ARM7 microprocessor used to run the appliance's firmware may be contained within the GPS module or the wireless modem. Or a different microprocessor may be used. And the antennae for both the modem and the GPS module can be implemented using different configurations. In one embodiment, for example, either or both antennae may be implemented as discrete circuits directly onto the circuit board. Similarly, active antennae, which are conventionally used for GPS, may also be used for the radio antenna connected to the wireless modem. In another embodiment, the internal battery may be a solar cell.

In yet another embodiment, a wiring harness may be used to attach the wireless appliance to the vehicle's OBD-II diagnostic connector. This allows the wireless appliance to be hidden in the vehicle, thereby making the device effective for recovery of stolen vehicles.

The packets described above may be transmitted at pre-set time intervals (e.g., once every 20 minutes for diagnostic data; once every minute for GPS data). Alternatively or additionally, the transmission may be performed when authorized by a user of the system (e.g., using a button on the website). In still other embodiments, the transmission is performed when a data parameter (e.g. engine coolant temperature) exceeds a predetermined value. Or a third party, such as the call center, may prompt transmission and/or analysis of data.

In other embodiments, a radio modem used to transmit GPS data may employ a terrestrial GPS system, such as a 'network-assisted' GPS available on chipsets designed by Qualcomm, Inc. In this case GPS data is determined by processing data from both satellites and terrestrial base stations. In addition, the wireless appliance may be interfaced to other sensors deployed in the vehicle to monitor additional data. For example, sensors for measuring tire pressure and temperature may be deployed in the vehicle and interfaced to the appliance so that data relating the tires' performance can be transmitted to the host computer system. These data can then be further analyzed along with the diagnostic and GPS data. Accelerometers can also be used as sensors to detect collisions.

In still other embodiments, other location-based applications can be combined with the above-mentioned mapping capabilities to provide real-time internet-based services involving maps. For example, data indicating traffic can be combined with mapping software to generate internet-based, real-time 'traffic maps' that graphically indicate traffic patterns. In this case data such as vehicle speed can be generated and transmitted by the in-vehicle wireless appliance described above. These data can also be used, for example, to generate an optimum travel route that minimizes traffic delays. Similarly, algorithms used to calculate vehicle emissions can be combined with the mapping software to generate real-time 'emissions maps' that graphically indicate pollutants such as oxides of nitrogen, carbon monoxide, or hydrocarbon emissions.

The foregoing description of the various embodiments of the present invention is provided to enable any person skilled in the art to make and use the present invention and its embodiments. Various modifications to these embodiments are possible, and the generic principles presented herein may be applied to other embodiments as well.

For instance, in still other embodiments, the above-described system is used to locate vehicles or things other than cars and trucks, such as industrial equipment or shipping containers.

Further, some embodiments of the present invention may be implemented in part or in whole as a hard-wired circuit, as a circuit configuration fabricated into an application-specific integrated circuit, or as a firmware program loaded into non-volatile storage, or a software program loaded from or into a data storage medium as machine-readable code. Such machine-readable code may include instructions executable by an array of logic elements, such as a microprocessor or other digital signal processing unit.

It will be apparent to one of ordinary skill in the art that some of the embodiments as described hereinabove may be implemented in many different embodiments of software, firmware, and hardware in the entities illustrated in the figures. The actual software code or specialized control hardware used to implement some of the present embodiments is not limiting of the present invention. Thus, the operation and behavior of the embodiments are described without specific reference to the actual software code or specialized hardware components. The absence of such specific references is feasible because it is clearly understood that artisans of ordinary skill would be able to design software and control hardware to implement the embodi-

ments of the present invention based on the description herein with only a reasonable effort and without undue experimentation.

Moreover, the processes associated with some of the present embodiments may be executed by programmable equipment, such as computers. Software that may cause programmable equipment to execute the processes may be stored in any storage device, such as, for example, a computer system (non-volatile) memory, an optical disk, magnetic tape, or magnetic disk. Furthermore, some of the processes may be programmed when the computer system is manufactured or via a computer-readable medium at a later date. Such a medium may include any of the forms listed above with respect to storage devices and may further include, for example, a carrier wave modulated, or otherwise manipulated, to convey instructions that can be read, demodulated/decoded and executed by a computer.

It can be appreciated, for example, that some process aspects described herein may be performed, in certain embodiments, using instructions stored on a computer-readable medium or media that direct a computer system to perform the process aspects. A computer-readable medium can include, for example, memory devices such as diskettes, compact discs of both read-only and writeable varieties, optical disk drives, and hard disk drives. A computer-readable medium can also include memory storage that can be physical, virtual, permanent, temporary, semi-permanent and/or semi-temporary. A computer-readable medium can further include one or more data signals transmitted on one or more carrier waves.

A "computer" or "computer system" may be, for example, a wireless or wireline variety of a microcomputer, minicomputer, laptop, personal data assistant (PDA), wireless e-mail device (e.g., BlackBerry), cellular phone, pager, processor, or any other programmable device, which devices may be capable of configuration for transmitting and receiving data over a network. Computer devices disclosed herein can include memory for storing certain software applications used in obtaining, processing and communicating data. It can be appreciated that such memory can be internal or external. The memory can also include any means for storing software, including a hard disk, an optical disk, floppy disk, ROM (read only memory), RAM (random access memory), PROM (programmable ROM), EEPROM (electrically erasable PROM), and other computer-readable media.

It is to be understood that the figures and descriptions of the present invention have been simplified to illustrate elements that are relevant for a clear understanding of the present invention, while eliminating, for purposes of clarity, other elements. Those of ordinary skill in the art will recognize that these and other elements may be desirable. However, because such elements are well known in the art, and because they do not facilitate a better understanding of the present invention, a discussion of such elements is not provided herein.

In some embodiments of the present invention disclosed herein, a single component can be replaced by multiple components, and multiple components replaced by a single component, to perform a given function or functions. Except where such substitution would not be operative to practice embodiments of the present invention, such substitution is within the scope of the present invention.

What is claimed is:

1. A wireless appliance for monitoring a vehicle, comprising:

(a) a microprocessor configured to determine a vehicle-communication protocol of a host vehicle;

(b) a vehicle-communication circuit in electrical communication with the microprocessor and integrated into a single ASIC comprising modules that each manage a vehicle-communication protocol, wherein a module in the vehicle-communication circuit comprises a circuit configured to support at least one of the J1850 PWM, J1850 VPWM, ISO 9141-2, CAN, Keyword 2000, and J1708 vehicle-communication protocols, and wherein the vehicle-communication circuit is configured to be interfaced with a diagnostic connector in the host vehicle;

(c) a multiplexing circuit configured to provide electrical communication between the microprocessor and a module of the vehicle-communication circuit, wherein the multiplexing circuit is configured to switch electrical communication from one module to another;

(d) a GPS module in electrical communication with the microprocessor;

(e) a wireless transmitter configured to transmit data generated by the GPS module and collected by the vehicle-communication circuit;

(f) a GPS antenna in electrical contact with the GPS module;

(g) a radio antenna in electrical contact with the wireless transmitter; and

(h) a single housing that houses the GPS antenna, the radio antenna, the microprocessor, the vehicle-communication circuit, the GPS module, and the wireless transmitter,

wherein the microprocessor is further configured to select a module in the vehicle-communication circuit that supports the determined vehicle-communication protocol.

2. A wireless appliance for monitoring a vehicle, comprising:

(a) a microprocessor;

(b) a vehicle-communication circuit in electrical communication with the microprocessor and integrated into a single ASIC comprising modules that each manage a vehicle-communication protocol; and

(c) a wireless transmitter configured to transmit data collected by the vehicle-communication circuit.

3. The wireless appliance of claim **2**, further comprising:

(a) a GPS module in electrical communication with the microprocessor,

wherein the wireless transmitter is further configured to transmit data generated by the GPS module.

4. The wireless appliance of claim **3**, further comprising:

(a) a GPS antenna in electrical contact with the GPS module;

(b) a radio antenna in electrical contact with the wireless transmitter; and

(c) a single housing that houses the GPS antenna, the radio antenna, the microprocessor, the vehicle-communication circuit, the GPS module, and the wireless transmitter.

5. The wireless appliance of claim **3**, further comprising a single chipset that comprises the GPS module and the wireless transmitter.

6. The wireless appliance of claim 2, wherein a module in the vehicle-communication circuit comprises a circuit configured to support at least one of the following vehicle-communication protocols: J1850 PWM, J1850 VPWM, ISO 9141-2, CAN, Keyword 2000, and J1708.

7. The wireless appliance of claim 6, wherein the vehicle-communication circuit comprises separate modules each configured to support one of the following vehicle-communication protocols: J1850 PWM, J1850 VPWM, ISO 9141-2, CAN, Keyword 2000, and J1708.

8. The wireless appliance of claim 7, further comprising a multiplexing circuit configured to provide electrical communication between the microprocessor and a module of the vehicle-communication circuit.

9. The wireless appliance of claim 8, wherein the multiplexing circuit is configured to switch electrical communication from one module to another.

10. The wireless appliance of claim 2, wherein the vehicle-communication circuit further comprises a microcontroller.

11. The wireless appliance of claim 10, wherein the microcontroller is configured to connect to the microprocessor using an asynchronous serial connection.

12. The wireless appliance of claim 2, wherein the microprocessor is configured to determine a vehicle-communication protocol of a host vehicle.

13. The wireless appliance of claim 12, wherein the host vehicle is selected from a group comprising an automobile, truck, wheeled commercial equipment, heavy truck, power sport vehicle, collision repair vehicle, marine vehicle, and recreational vehicle.

14. The wireless appliance of claim 12, wherein the microprocessor is configured to monitor at least one of a baud rate and at least one pulse width characteristic of the vehicle-communication protocol of the host vehicle.

15. The wireless appliance of claim 12, wherein the microprocessor is configured to initiate, using a first vehicle-communication protocol, at least one test communication with the host vehicle.

16. The wireless appliance of claim 12, wherein the microprocessor is configured to test a plurality of outputs of a diagnostic system in the host vehicle.

17. The wireless appliance of claim 16, wherein the plurality of outputs are tested to determine whether respective outputs are active.

18. The wireless appliance of claim 12, wherein the microprocessor is further configured to select a module in the vehicle-communication circuit that supports the determined vehicle-communication protocol.

19. The wireless appliance of claim 2, wherein the wireless appliance is configured to query an engine control unit (ECU) of the vehicle.

20. The wireless appliance of claim 2, further comprising an internal battery.

21. The wireless appliance of claim 20, wherein the internal battery comprises a solar cell.

22. The wireless appliance of claim 20, further comprising a power-conditioning circuit in electrical communication with the internal battery and a power source of the vehicle.

23. The wireless appliance of claim 2, wherein the microprocessor is configured to interface with a memory module.

24. The wireless appliance of claim 2, wherein the wireless transmitter comprises a wireless modem.

25. The wireless appliance of claim 24, wherein the microprocessor is configured to identify the wireless modem.

26. The wireless appliance of claim 25, wherein the microprocessor is configured to identify the wireless modem based at least in part on an electronic serial number of the wireless modem.

27. The wireless appliance of claim 24, wherein the wireless modem utilizes an active antenna.

28. The wireless appliance of claim 2, wherein the vehicle-communication circuit is configured to be interfaced with a diagnostic connector in the vehicle.

29. The wireless appliance of claim 28, wherein the wireless appliance is configured to receive power, at least in part, via the diagnostic connector.

30. The wireless appliance of claim 28, wherein the diagnostic connector is an OBD-II connector.

31. The wireless appliance of claim 28, wherein the wireless appliance is configured to be attached to the diagnostic connector via a wiring harness.

32. The wireless appliance of claim 2, wherein the wireless appliance is interfaced with at least one sensor in the vehicle.

33. The wireless appliance of claim 32, wherein the at least one sensor comprises a tire pressure or temperature sensor.

34. The wireless appliance of claim 2, wherein the wireless appliance is directly interfaced with an electrical system of the vehicle.

35. A wireless appliance for monitoring a vehicle, comprising:

(a) a substrate;

(b) a microprocessor supported by the substrate;

(c) a vehicle-communication circuit, in electrical communication with the microprocessor, comprising modules that each manage a different vehicle-communication protocol; and

(d) a wireless transmitter, configured to transmit data collected by the vehicle-communication circuit, including a radio antenna connected to the substrate.

36. The wireless appliance of claim 35, further comprising:

(a) a GPS module, in electrical communication with the microprocessor, including a GPS antenna connected to the substrate,

wherein the wireless transmitter is further configured to transmit data generated by the GPS module.

37. The wireless appliance of claim 36, further comprising a single chipset that comprises both the GPS module and the wireless transmitter.

38. The wireless appliance of claim 35, wherein a module in the vehicle-communication circuit comprises a circuit configured to support at least one of the following vehicle-communication protocols: J1850 PWM, J1850 VPWM, ISO 9141-2, CAN, Keyword 2000, and J1708.

39. The wireless appliance of claim 38, wherein the vehicle-communication circuit comprises separate modules configured to support one of the following vehicle-communication protocols: J1850 PWM, J1850 VPWM, ISO 9141-2, CAN, Keyword 2000, and J1708.

40. The wireless appliance of claim 39, further comprising a multiplexing circuit configured to provide electrical communication between the microprocessor and a module of the vehicle-communication circuit.

41. The wireless appliance of claim 40, wherein the multiplexing circuit is configured to switch electrical communication from one module to another.

42. The wireless appliance of claim 35, wherein the vehicle-communication circuit further comprises a microcontroller.

43. The wireless appliance of claim 42, wherein the microcontroller connects to the microprocessor using an asynchronous serial connection.

44. The wireless appliance of claim **35**, wherein the microprocessor is configured to determine a vehicle-communication protocol of a host vehicle.

45. The wireless appliance of claim **44**, wherein the microprocessor is further configured to select a module in the vehicle-communication circuit that is configured to support the determined vehicle-communication protocol.

46. The wireless appliance of claim **35**, further comprising an internal battery.

47. The wireless appliance of claim **46**, further comprising a power-conditioning circuit in electrical communication with the internal battery and a power source of the host vehicle.

48. The wireless appliance of claim **35**, wherein the vehicle is selected from a group comprising an automobile, truck, wheeled commercial equipment, heavy truck, power sport vehicle, collision repair vehicle, marine vehicle, and recreational vehicle.

49. A wireless appliance for monitoring a vehicle, comprising:

(a) a microprocessor;

(b) a vehicle-communication circuit, in electrical communication with the microprocessor, comprising one or more modules that each manage a different vehicle-communication protocol to collect diagnostic data from a host vehicle; and

(c) a wireless transmitter controlled by the microprocessor and configured to transmit the diagnostic data.

50. The wireless appliance of claim **49**, further comprising:

(a) a GPS module, in electrical communication with the microprocessor, configured to receive GPS signals from an antenna, generate data in response to the signals, and then send the data to the microprocessor to calculate location-based data,

wherein the wireless transmitter is further configured to transmit the location-based data.

51. The wireless appliance of claim **50**, further comprising:

(a) a GPS antenna in electrical contact with the GPS module;

(b) a radio antenna in electrical contact with the wireless transmitter; and

(c) a single housing that houses the GPS antenna, the radio antenna, the microprocessor, the vehicle-communication circuit, the GPS module, and the wireless transmitter.

52. The wireless appliance of claim **50**, further comprising a single chipset that comprises the GPS module and the wireless transmitter.

53. The wireless appliance of claim **49**, wherein the host vehicle is selected from a group comprising an automobile, truck, wheeled commercial equipment, heavy truck, power sport vehicle, collision repair vehicle, marine vehicle, and recreational vehicle.

54. A wireless appliance for monitoring a vehicle, comprising:

(a) a microprocessor; and

(b) a mechanical adaptor interfaced with the microprocessor and comprising a connector configured to power and provide a data link to a plurality of wireless transmitters configured to operate on different wireless networks.

55. The wireless appliance of claim **54**, further comprising:

(a) A GPS module in electrical communication with the microprocessor; and

(b) a single wireless transmitter connected to the mechanical adaptor and configured to transmit data generated by the GPS module.

56. The wireless appliance of claim **54**, wherein the mechanical adaptor is configured to power and provide a data link to wireless transmitters configured to operate on at least one of the following wireless networks: CDMA, GSM, GPRS, AMPS, Mobitex, DataTac, and ORBCOMM.

57. The wireless appliance of claim **54**, wherein the microprocessor is configured to determine a wireless network associated with the wireless transmitter.

58. The wireless appliance of claim **54**, wherein the data link is an electrical line for serial data communication.

59. The wireless appliance of claim **54**, further comprising a power-conditioning circuit in electrical contact with the mechanical adaptor.

60. The wireless appliance of claim **59**, wherein the microprocessor is configured to determine at least one power requirement of the wireless transmitter.

61. The wireless appliance of claim **60**, wherein the microprocessor is in electrical communication with the power-conditioning circuit and is configured to control power supplied to the wireless transmitter.

62. The wireless appliance of claim **54**, wherein the vehicle is selected from a group comprising an automobile, truck, wheeled commercial equipment, heavy truck, power sport vehicle, collision repair vehicle, marine vehicle, and recreational vehicle.

63. A single ASIC, comprising:

(a) a microprocessor;

(b) a vehicle-communication circuit in electrical communication with the microprocessor and comprising modules that each manage a vehicle-communication protocol; and

(c) a wireless transmitter configured to transmit data collected by the vehicle-communication circuit.

64. The ASIC of claim **63**, further comprising:

(a) a GPS module in electrical communication with the microprocessor,

wherein the wireless transmitter is further configured to transmit data generated by the GPS module.

65. The ASIC of claim **63**, wherein a module in the vehicle-communication circuit comprises a circuit configured to support at least one of the following vehicle-communication protocols: J1850 PWM, J1850 VPWM, ISO 9141-2, CAN, Keyword 2000, and J1708.

66. The ASIC of claim **65**, wherein the vehicle-communication circuit comprises separate modules configured to support one of the following vehicle-communication protocols: J1850 PWM, J1850 VPWM, ISO 9141-2, CAN, Keyword 2000, and J1708.

67. The ASIC of claim **66**, further comprising a multiplexing circuit configured to provide electrical communication between the microprocessor and a module of the vehicle-communication circuit.

68. The ASIC of claim **67**, wherein the multiplexing circuit is configured to switch electrical communication from one module to another.

69. The ASIC of claim **68**, wherein the vehicle-communication circuit further comprises a microcontroller.

70. The ASIC of claim **69**, wherein the microcontroller connects to the microprocessor using an asynchronous serial connection.

71. The ASIC of claim **63**, wherein the microprocessor is configured to determine a vehicle-communication protocol of a host vehicle.

72. The ASIC of claim **71**, wherein the microprocessor is further configured to select a module in the vehicle-communication circuit that is configured to support the determined vehicle-communication protocol.

73. The ASIC of claim **71**, wherein the host vehicle is selected from a group comprising an automobile, truck, wheeled commercial equipment, heavy truck, power sport vehicle, collision repair vehicle, marine vehicle, and recreational vehicle.

74. A monitorable vehicle, comprising:

(a) a vehicle including an on-board diagnostic system configured to query data relating to the vehicle; and

(b) a wireless appliance, comprising,

(i) a substrate;

(ii) a microprocessor supported by the substrate;

(iii) a vehicle-communication circuit, in electrical communication with the microprocessor, comprising modules that each manage a different vehicle-communication protocol, wherein the vehicle-communication circuit is interfaced with the on-board diagnostic system; and

(iv) a wireless transmitter, configured to transmit data collected by the vehicle-communication circuit, including a radio antenna connected to the substrate.

75. The monitorable vehicle of claim **74**, wherein the vehicle is selected from a group comprising an automobile, truck, wheeled commercial equipment, heavy truck, power sport vehicle, collision repair vehicle, marine vehicle, and recreational vehicle.

76. The monitorable vehicle of claim **74**, wherein the vehicle-communication circuit is interfaced with the on-board diagnostic system via a diagnostic connector.

77. The monitorable vehicle of claim **76**, wherein the wireless appliance is attached to the diagnostic connector via a wiring harness.

78. The monitorable vehicle of claim **74**, wherein the vehicle-communication circuit is directly interfaced with the electrical system.

79. The monitorable vehicle of claim **74**, wherein the wireless appliance further comprises:

(i) a GPS module, in electrical communication with the microprocessor, including a GPS antenna connected to the substrate,

wherein the wireless transmitter is further configured to transmit data generated by the GPS module.

* * * * *