US007149623B2

(12) **United States Patent**
Flick

(10) **Patent No.: US 7,149,623 B2**
(45) **Date of Patent: Dec. 12, 2006**

(54) **VEHICLE TRACKER INCLUDING INPUT/OUTPUT FEATURES AND RELATED METHODS**

(75) Inventor: **Kenneth E. Flick**, Douglasville, GA (US)

(73) Assignee: **Omega Patents, L.L.C.**, Douglasville, GA (US)

(*) Notice: Subject to any disclaimer, the term of this patent is extended or adjusted under 35 U.S.C. 154(b) by 277 days.

(21) Appl. No.: **10/383,496**

(22) Filed: **Mar. 7, 2003**

(65) **Prior Publication Data**

US 2003/0154027 A1 Aug. 14, 2003

Related U.S. Application Data

(63) Continuation of application No. 09/859,972, filed on May 17, 2001, now Pat. No. 6,606,561.

(60) Provisional application No. 60/264,811, filed on Jan. 29, 2001, provisional application No. 60/258,005, filed on Dec. 22, 2000, provisional application No. 60/251,552, filed on Dec. 6, 2000, provisional application No. 60/252,125, filed on Nov. 20, 2000, provisional application No. 60/246,463, filed on Nov. 7, 2000, provisional application No. 60/236,890, filed on Sep. 29, 2000, provisional application No. 60/222,777, filed on Aug. 3, 2000, provisional application No. 60/205,178, filed on May 17, 2000.

(51) **Int. Cl.**
G01C 21/26 (2006.01)

(52) **U.S. Cl.** **701/207**; 340/506; 340/531; 340/500; 340/515

(58) **Field of Classification Search** 701/213, 701/36, 211, 200, 207; 340/853.2, 901, 988, 340/989, 991, 992, 993, 425.5, 506, 531, 340/500, 515

See application file for complete search history.

(56) **References Cited**

U.S. PATENT DOCUMENTS

3,868,497	A	*	2/1975	Vietor	701/121
3,875,379	A	*	4/1975	Vietor	701/121
4,591,823	A	*	5/1986	Horvat	340/396
4,754,255	A	*	6/1988	Sanders et al.	307/10.4
4,884,055	A	*	11/1989	Memmola	340/426.28
5,043,736	A		8/1991	Darnell et al.	342/357
5,055,851	A		10/1991	Sheffer	342/457
5,081,667	A	*	1/1992	Drori et al.	455/404.1
5,177,490	A		1/1993	Ando et al.	342/357

(Continued)

OTHER PUBLICATIONS

P Kronborg, "Highway Helpers"—Field trials with traffic inside Stockholm, Proc. of 6th world congress on intelligent journal, 1999 (from DialogEclassic Web(tm) file 63, acc. No. 00819154).*

(Continued)

Primary Examiner—Cuong Nguyen
(74) *Attorney, Agent, or Firm*—Allen, Dyer, Doppelt, Milbrath & Gilchrist, P.A.

(57) **ABSTRACT**

A tracking system includes a vehicle tracking unit for a vehicle of a type including an alarm indicator, and a monitoring station receiving the alarm indication alert from the vehicle tracking unit. The vehicle tracking unit may include a vehicle position determining device, a wireless communications device, and a controller connected to the wireless communications device and the vehicle position determining device. The controller may cooperate with the wireless communications device to send an alarm indication alert responsive to at least one of activation of the vehicle alarm indicator continuously for greater than a predetermined time and activation of the vehicle alarm indicator in a repetitive pattern. The controller may also include a dual polarity compatible output for a vehicle device, such as the vehicle alarm indicator.

34 Claims, 10 Drawing Sheets

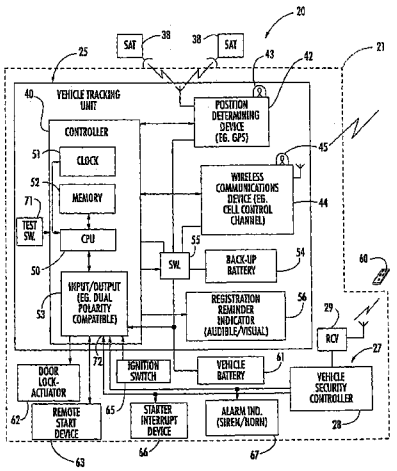

OMEGA EXHIBIT 2042

U.S. PATENT DOCUMENTS

5,195,126	A	*	3/1993	Carrier et al.	379/45
5,223,844	A	*	6/1993	Mansell et al.	342/357.07
5,247,564	A	*	9/1993	Zicker	379/40
5,262,774	A		11/1993	Kuwahara et al.	340/988
5,334,986	A		8/1994	Fernhout	342/357
5,365,450	A		11/1994	Schuchman	364/449
5,513,244	A	*	4/1996	Joao et al.	455/404.1
5,515,043	A		5/1996	Berard et al.	340/988
5,559,491	A	*	9/1996	Stadler	340/426.25
5,559,520	A	*	9/1996	Barzegar et al.	342/357.1
5,673,305	A	*	9/1997	Ross	455/517
5,677,666	A	*	10/1997	Stallbohm	340/426.27
5,740,047	A	*	4/1998	Pilley et al.	701/120
5,777,580	A		7/1998	Janky et al.	342/457
5,857,986	A	*	1/1999	Moriyasu	601/49
5,939,975	A		8/1999	Tsuria et al.	307/10.5
5,944,768	A		8/1999	Ito	340/990
5,969,433	A	*	10/1999	Maggiora et al.	307/10.5
5,983,161	A	*	11/1999	Lemelson et al.	701/301
6,018,657	A		1/2000	Kennedy, III et al.	455/426
6,025,774	A		2/2000	Forbes	340/426
6,049,269	A		4/2000	Byrd et al.	340/426
6,055,426	A		4/2000	Beasley	455/432
6,069,570	A		5/2000	Herring	340/825.49
6,075,458	A		6/2000	Ladner et al.	340/825.49
6,087,942	A	*	7/2000	Sleichter et al.	340/576
6,133,855	A		10/2000	Kim	340/932.2
6,148,212	A		11/2000	Park et al.	455/456
6,151,551	A		11/2000	Geier et al.	701/207
6,154,648	A		11/2000	Comer	455/426
6,166,626	A		12/2000	Janky et al.	340/426
6,169,497	B1		1/2001	Robert	340/988
6,195,597	B1		2/2001	Yamada	701/1
6,240,365	B1		5/2001	Bunn	340/988
6,275,773	B1		8/2001	Lemelson et al.	340/436
6,320,535	B1		11/2001	Hillman et al.	342/357
6,330,499	B1		12/2001	Chou et al.	701/32
6,507,786	B1	*	1/2003	Flick	701/213
6,509,833	B1	*	1/2003	Tate	340/539.1
6,509,868	B1	*	1/2003	Flick	342/357.07
6,512,465	B1	*	1/2003	Flick	340/989
6,522,267	B1	*	2/2003	Flick	340/989
6,542,077	B1	*	4/2003	Joao	340/426.16
6,581,961	B1	*	6/2003	Bowers	280/735
6,611,229	B1	*	8/2003	Muramatsu et al.	342/357.07
6,661,340	B1	*	12/2003	Saylor et al.	340/517
6,703,946	B1	*	3/2004	Flick	340/989
6,744,370	B1	*	6/2004	Sleichter et al.	340/576

OTHER PUBLICATIONS

Unknown author, 2003 Chevy Express and GMC Savana build for work new full-major strong, smart and surprising features, General Motors—Press Release, Mar. 6, 2002 (from DialogClassic Web(tm) file 81, acc. No. 184143).*

Z Juda, In-vehicle networking for intelligent vehicle, ISATA 2000—Body Structures/Chassis Engineering, Sep. 25, 2000 (from DialogClassic Web(tm) file 81, acc. No. 163956).*

SK Gehrig et al., System architecture for an intersection assistant fusing in GPS information, IEEE Intelligent Vehicles Symp., 2003 (from DialogClassic Web(tm) file 95, acc. No. 01839210).*

Omega Research and Development, Inc., Installation Instructions for ATV-1000 Model Car Alarm, 2002. This product has been sold in the U.S. for approximately five years.

* cited by examiner

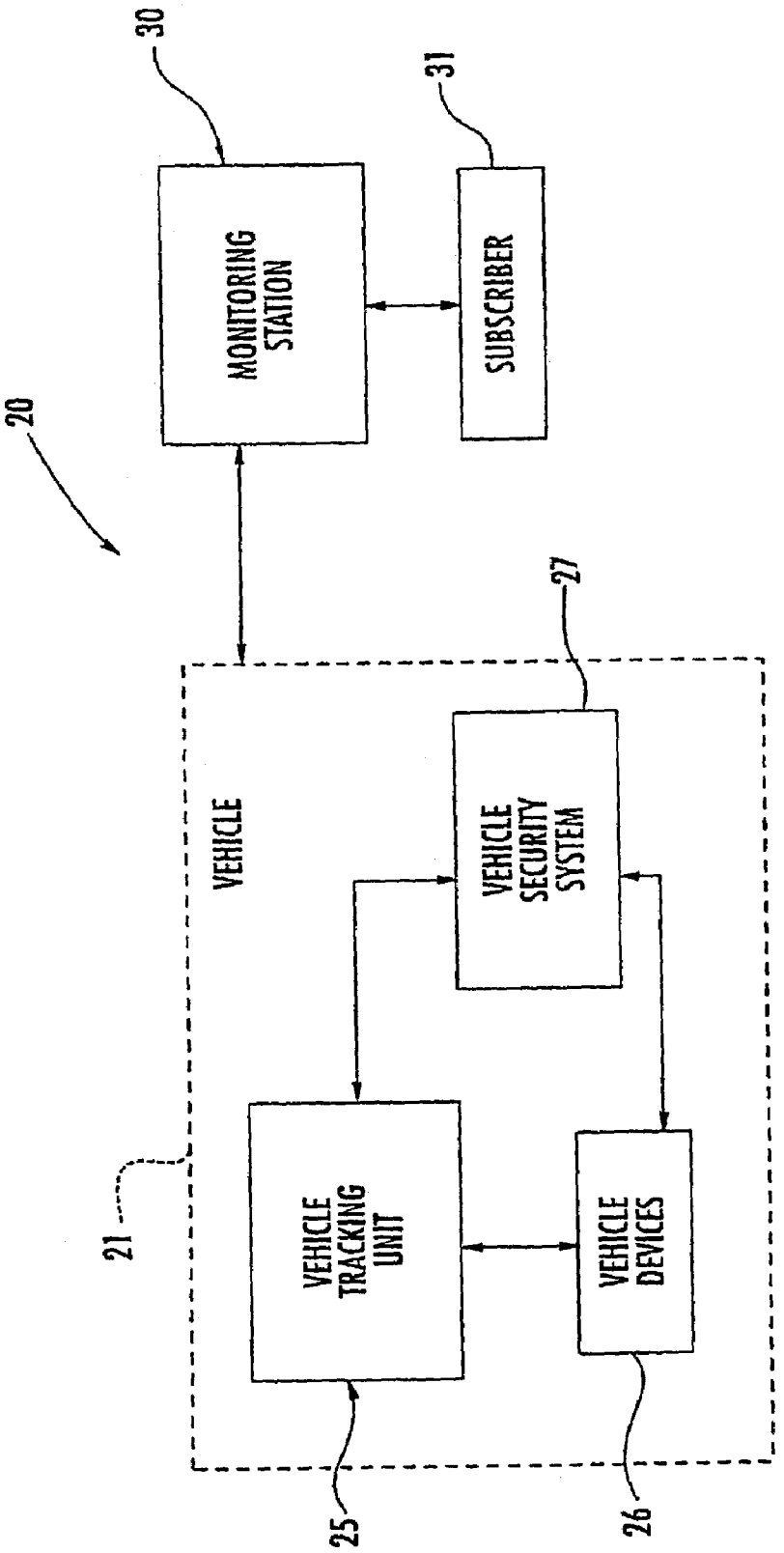
20
30
MONITORING STATION
31
SUBSCRIBER
21
VEHICLE
27
VEHICLE SECURITY SYSTEM
VEHICLE TRACKING UNIT
VEHICLE DEVICES
25
26

FIG. 1.

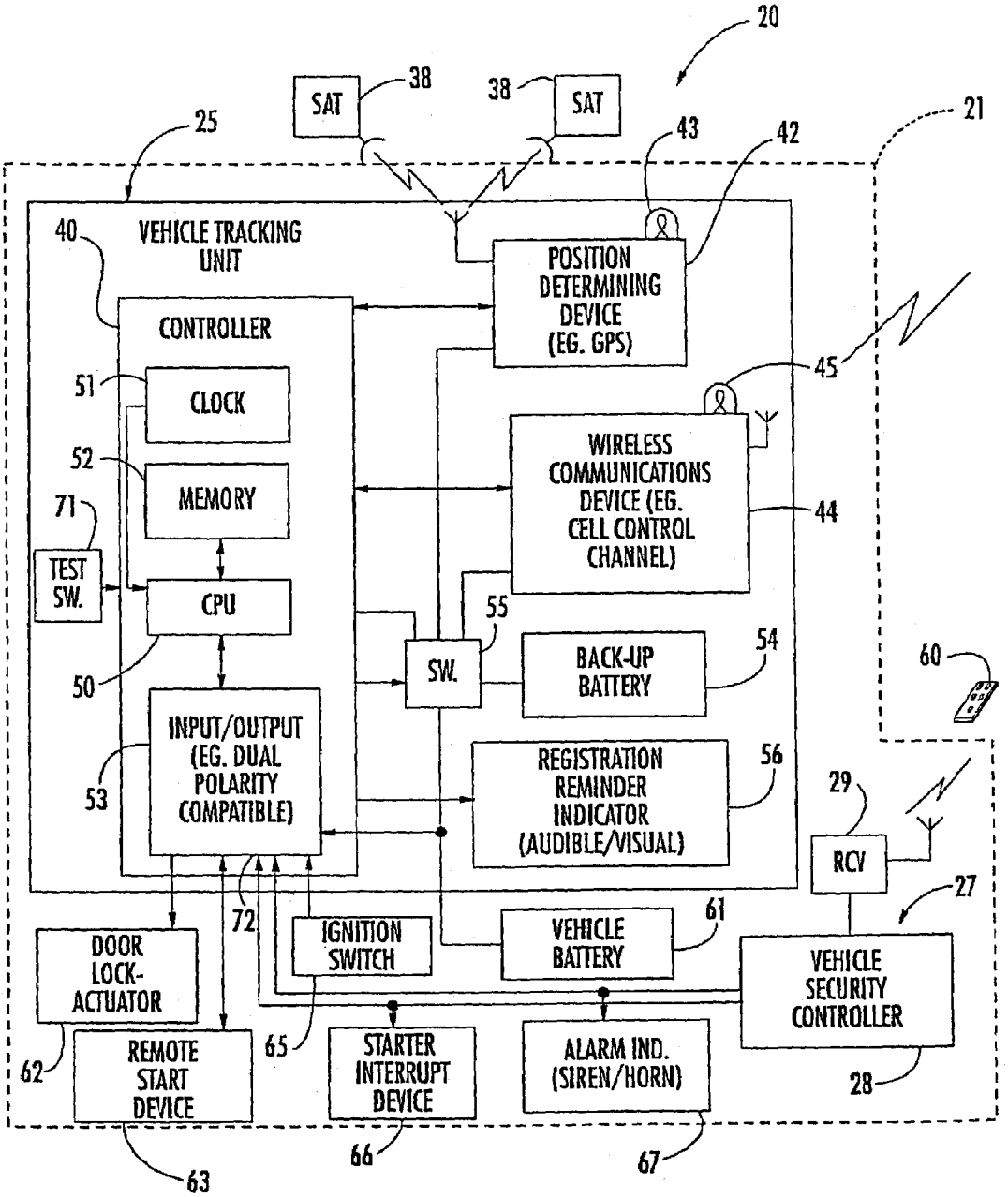
20
SAT
38
38
SAT
25
43
42
21
40
VEHICLE TRACKING UNIT
POSITION DETERMINING DEVICE (EG. GPS)
CONTROLLER
45
51
CLOCK
52
MEMORY
WIRELESS COMMUNICATIONS DEVICE (EG. CELL CONTROL CHANNEL)
44
71
TEST SW.
CPU
55
SW.
BACK-UP BATTERY
54
60
50
INPUT/OUTPUT (EG. DUAL POLARITY COMPATIBLE)
53
REGISTRATION REMINDER INDICATOR (AUDIBLE/VISUAL)
56
29
RCV
27
72
IGNITION SWITCH
VEHICLE BATTERY
61
DOOR LOCK-ACTUATOR
VEHICLE SECURITY CONTROLLER
62
REMOTE START DEVICE
65
STARTER INTERRUPT DEVICE
ALARM IND. (SIREN/HORN)
28
63
66
67

FIG. 2.

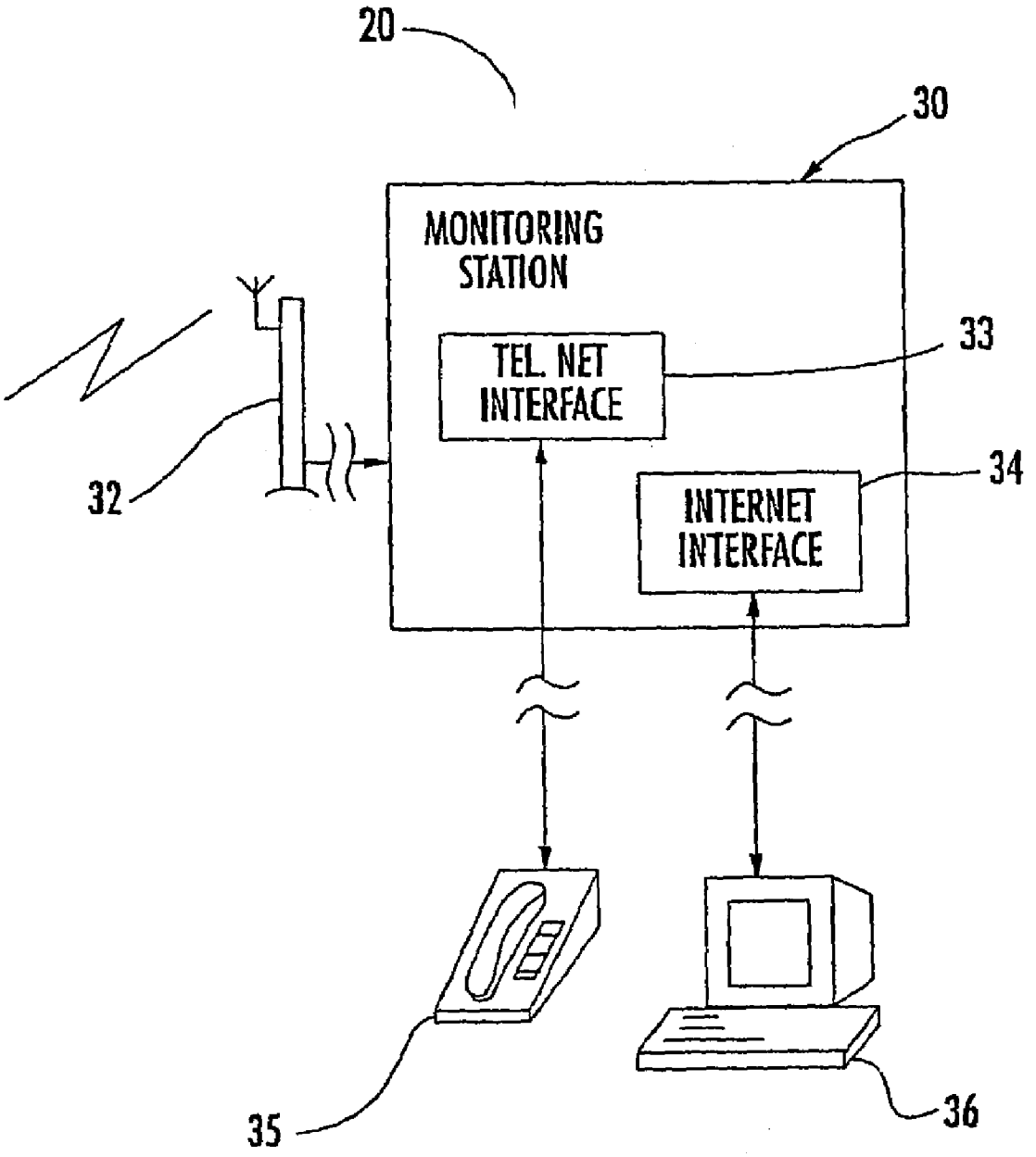
20
30
MONITORING STATION
TEL. NET INTERFACE
33
INTERNET INTERFACE
34
32
35
36

FIG. 3.

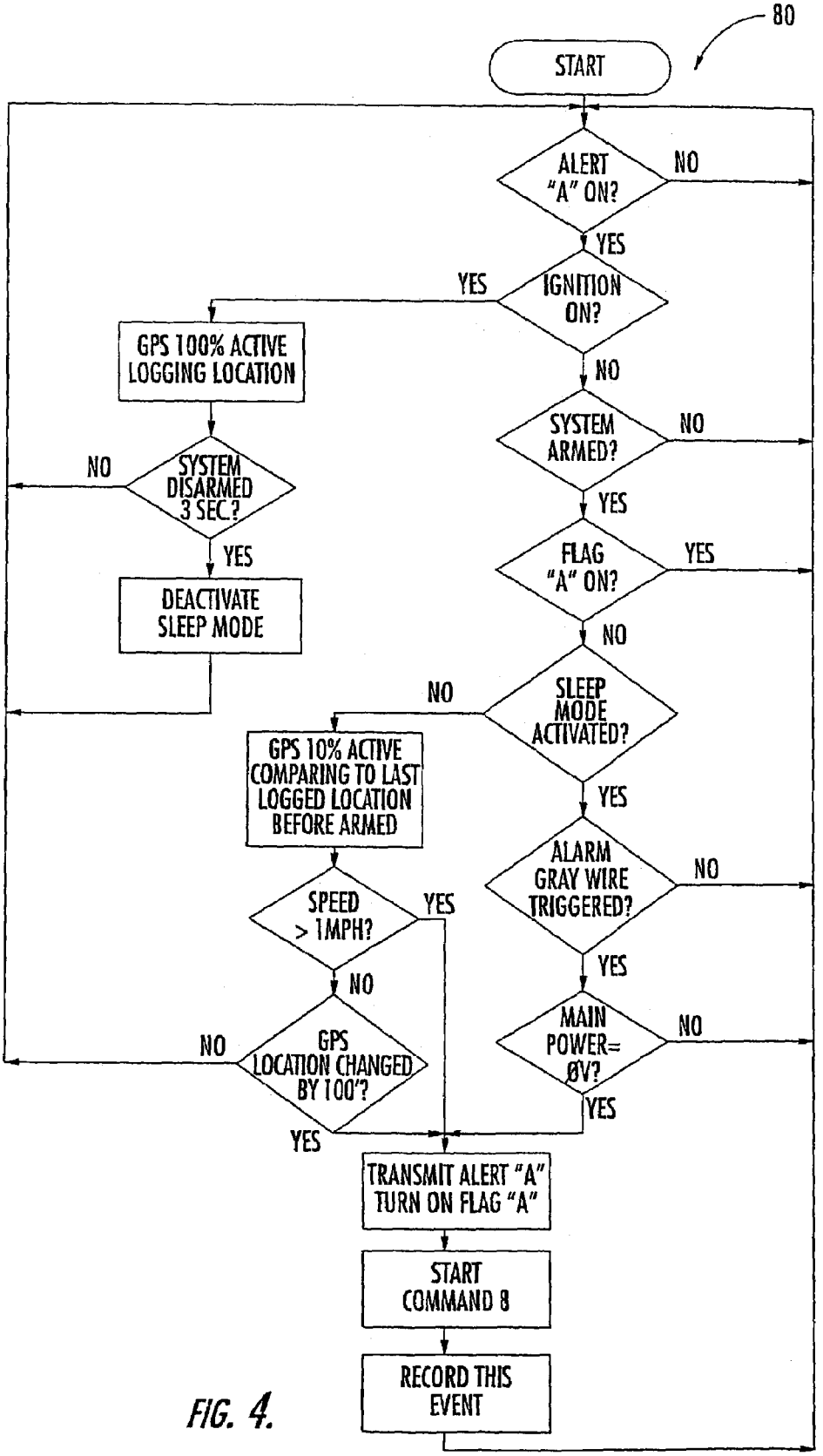
80
START
ALERT "A" ON?
NO
YES
IGNITION ON?
YES
GPS 100% ACTIVE LOGGING LOCATION
NO
SYSTEM ARMED?
NO
YES
SYSTEM DISARMED 3 SEC.?
NO
YES
DEACTIVATE SLEEP MODE
FLAG "A" ON?
YES
NO
SLEEP MODE ACTIVATED?
NO
GPS 10% ACTIVE COMPARING TO LAST LOGGED LOCATION BEFORE ARMED
YES
ALARM GRAY WIRE TRIGGERED?
NO
SPEED > 1MPH?
YES
NO
YES
MAIN POWER= ØV?
NO
GPS LOCATION CHANGED BY 100'?
NO
YES
YES
TRANSMIT ALERT "A" TURN ON FLAG "A"
START COMMAND 8
RECORD THIS EVENT

FIG. 4.

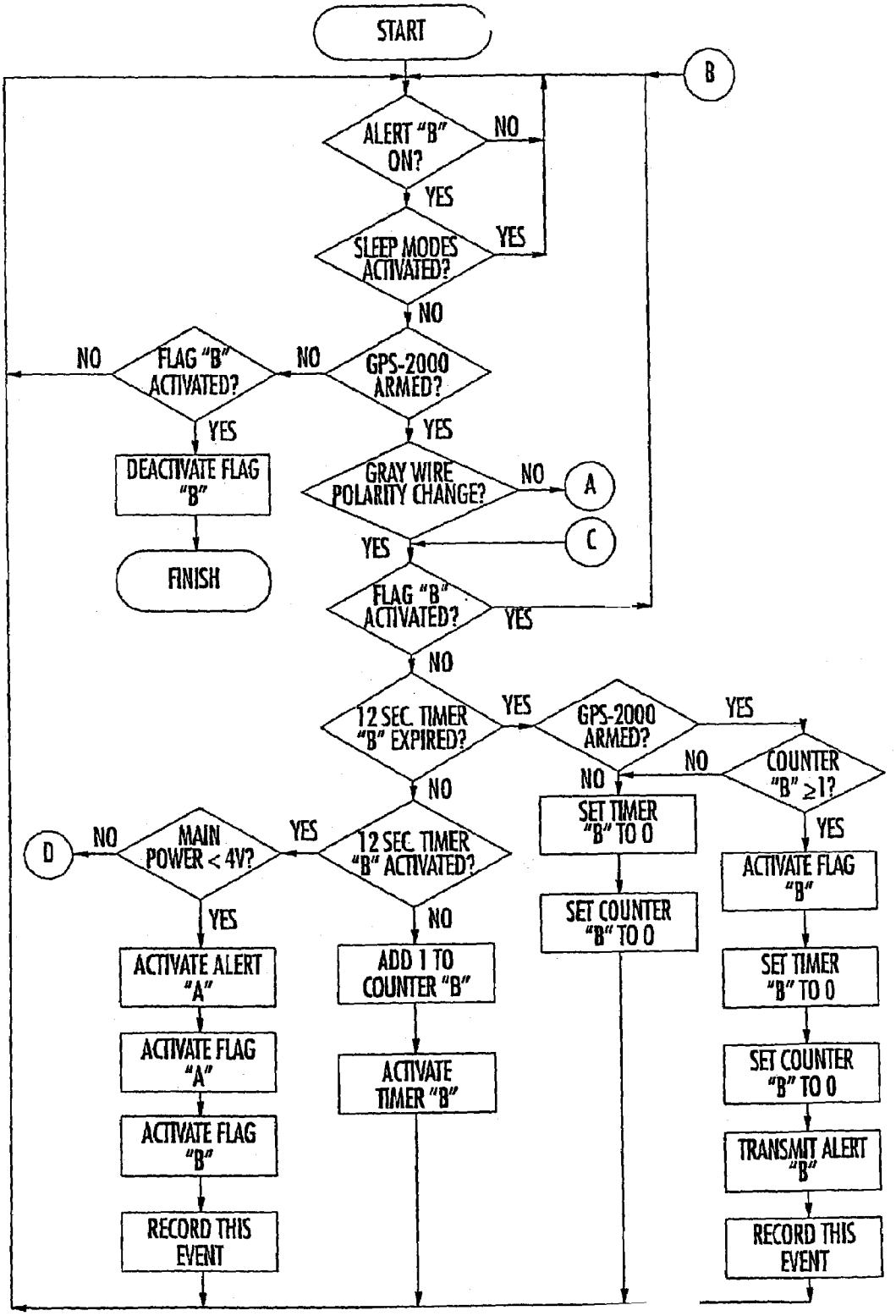
START
B
ALERT "B" ON?
NO
YES
SLEEP MODES ACTIVATED?
YES
NO
GPS-2000 ARMED?
NO
FLAG "B" ACTIVATED?
NO
YES
DEACTIVATE FLAG "B"
FINISH
YES
GRAY WIRE POLARITY CHANGE?
NO
A
C
YES
FLAG "B" ACTIVATED?
YES
NO
12 SEC. TIMER "B" EXPIRED?
YES
GPS-2000 ARMED?
YES
NO
COUNTER "B" ≥1?
NO
NO
SET TIMER "B" TO 0
SET COUNTER "B" TO 0
YES
ACTIVATE FLAG "B"
SET TIMER "B" TO 0
SET COUNTER "B" TO 0
TRANSMIT ALERT "B"
RECORD THIS EVENT
NO
12 SEC. TIMER "B" ACTIVATED?
YES
MAIN POWER < 4V?
NO
D
YES
ACTIVATE ALERT "A"
ACTIVATE FLAG "A"
ACTIVATE FLAG "B"
RECORD THIS EVENT
NO
ADD 1 TO COUNTER "B"
ACTIVATE TIMER "B"

FIG. 5A.

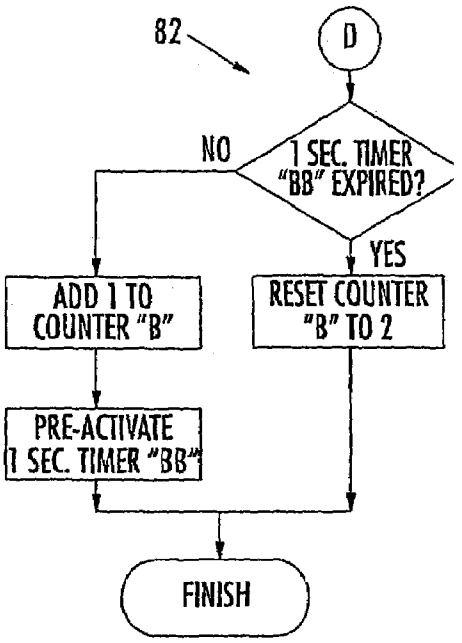
82
D
1 SEC. TIMER "BB" EXPIRED?
NO
YES
ADD 1 TO COUNTER "B"
RESET COUNTER "B" TO 2
PRE-ACTIVATE 1 SEC. TIMER "BB"
FINISH

FIG. 5B.

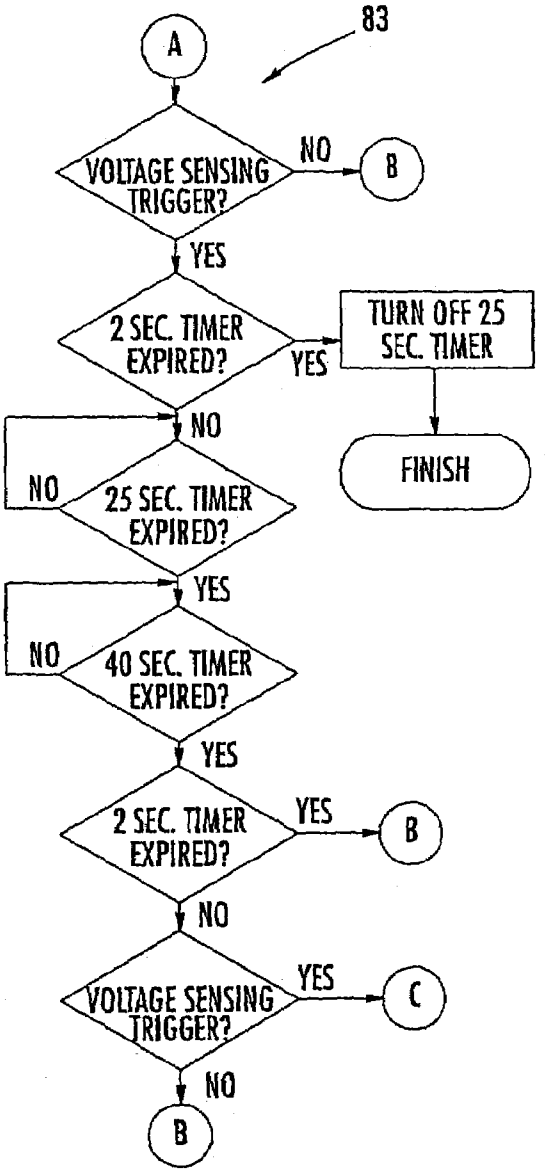
83
A
VOLTAGE SENSING TRIGGER?
NO
B
YES
2 SEC. TIMER EXPIRED?
YES
TURN OFF 25 SEC. TIMER
FINISH
NO
NO
25 SEC. TIMER EXPIRED?
YES
NO
40 SEC. TIMER EXPIRED?
YES
2 SEC. TIMER EXPIRED?
YES
B
NO
VOLTAGE SENSING TRIGGER?
YES
C
NO
B

FIG. 5C.

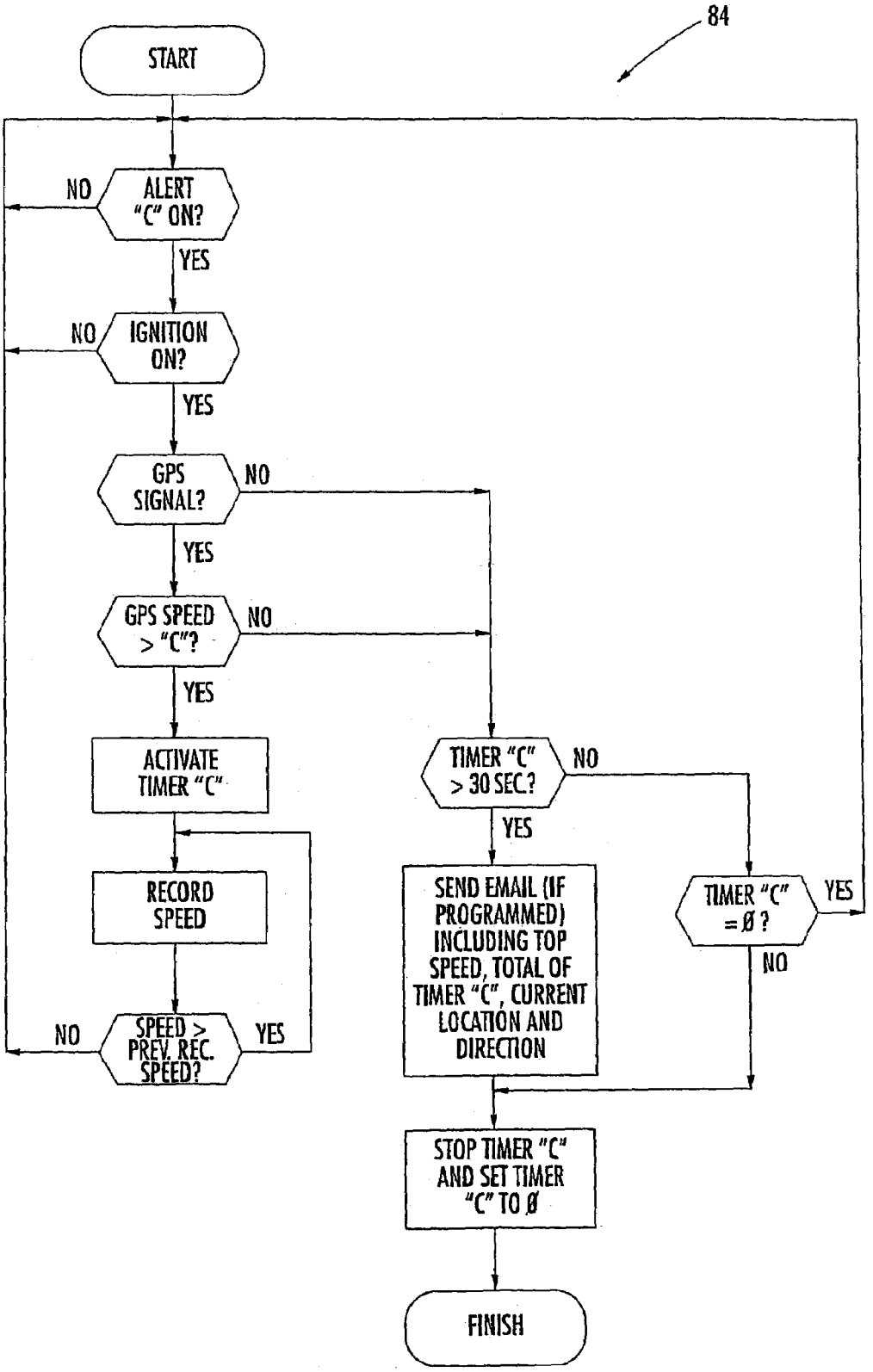
84
START
ALERT "C" ON?
NO
YES
IGNITION ON?
NO
YES
GPS SIGNAL?
NO
YES
GPS SPEED > "C"?
NO
YES
ACTIVATE TIMER "C"
RECORD SPEED
SPEED > PREV. REC. SPEED?
NO
YES
TIMER "C" > 30 SEC.?
NO
YES
SEND EMAIL (IF PROGRAMMED) INCLUDING TOP SPEED, TOTAL OF TIMER "C", CURRENT LOCATION AND DIRECTION
TIMER "C" = Ø ?
YES
NO
STOP TIMER "C" AND SET TIMER "C" TO Ø
FINISH

FIG. 6.

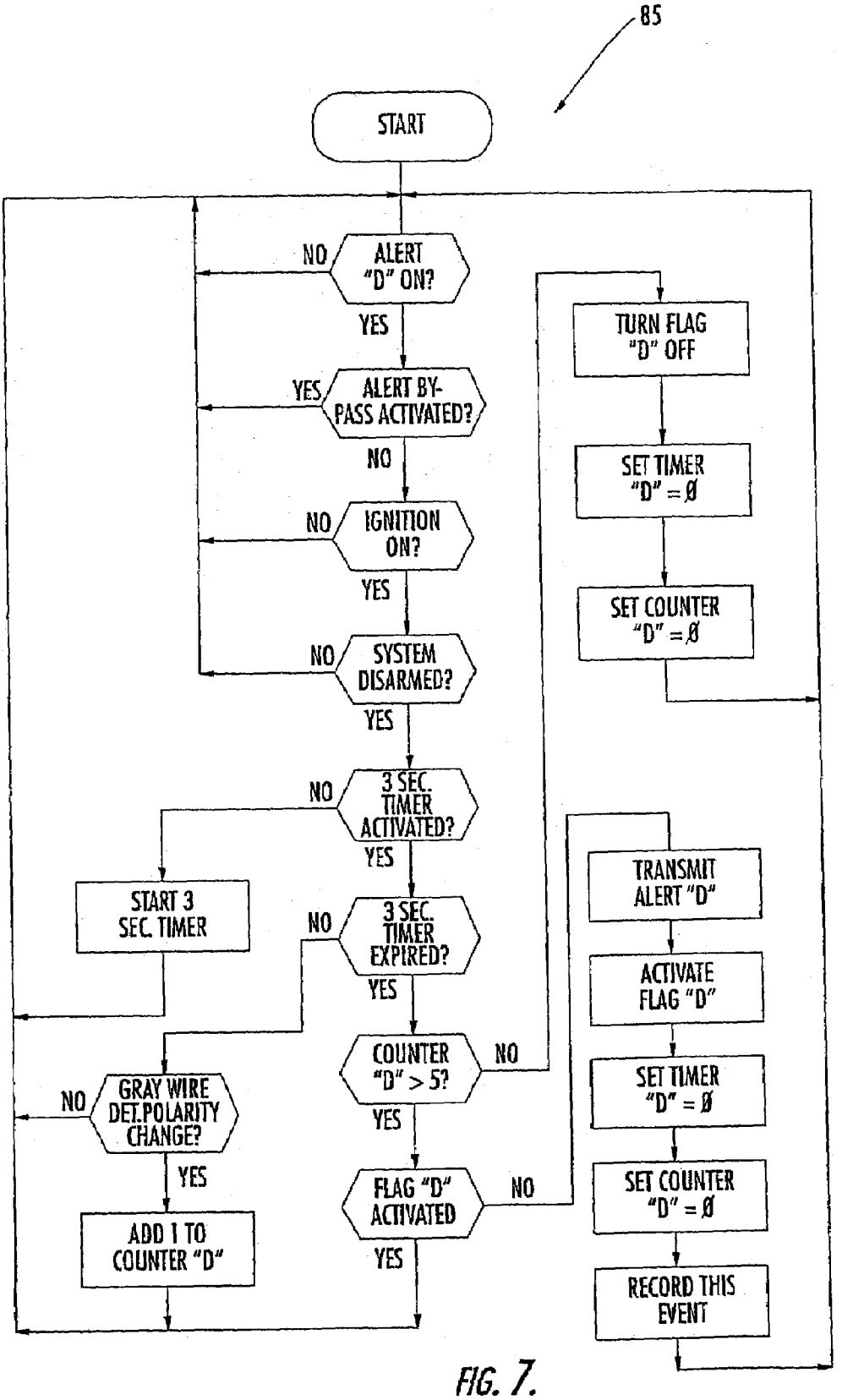
85
START
ALERT "D" ON?
NO
YES
ALERT BY-PASS ACTIVATED?
YES
NO
IGNITION ON?
NO
YES
SYSTEM DISARMED?
NO
YES
3 SEC. TIMER ACTIVATED?
NO
YES
START 3 SEC. TIMER
3 SEC. TIMER EXPIRED?
NO
YES
COUNTER "D" > 5?
NO
YES
GRAY WIRE DET.POLARITY CHANGE?
NO
YES
ADD 1 TO COUNTER "D"
FLAG "D" ACTIVATED
NO
YES
TURN FLAG "D" OFF
SET TIMER "D" = Ø
SET COUNTER "D" = Ø
TRANSMIT ALERT "D"
ACTIVATE FLAG "D"
SET TIMER "D" = Ø
SET COUNTER "D" = Ø
RECORD THIS EVENT

FIG. 7.

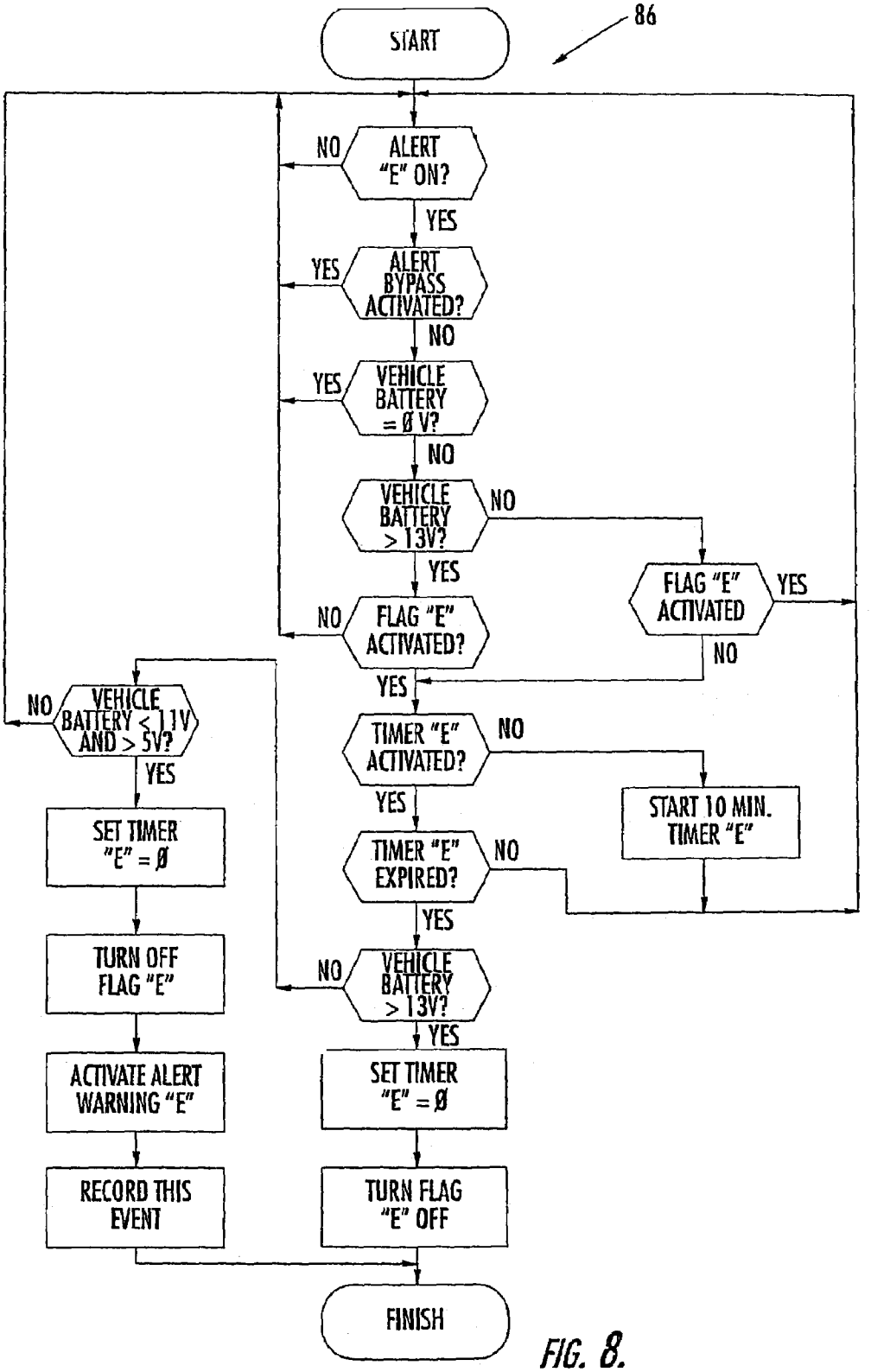
86
START
ALERT "E" ON?
NO
YES
ALERT BYPASS ACTIVATED?
YES
NO
VEHICLE BATTERY = Ø V?
YES
NO
VEHICLE BATTERY > 13V?
NO
YES
FLAG "E" ACTIVATED
YES
NO
FLAG "E" ACTIVATED?
NO
YES
VEHICLE BATTERY < 11V AND > 5V?
NO
YES
TIMER "E" ACTIVATED?
NO
YES
START 10 MIN. TIMER "E"
SET TIMER "E" = Ø
TIMER "E" EXPIRED?
NO
YES
TURN OFF FLAG "E"
VEHICLE BATTERY > 13V?
NO
YES
ACTIVATE ALERT WARNING "E"
SET TIMER "E" = Ø
RECORD THIS EVENT
TURN FLAG "E" OFF
FINISH

FIG. 8.

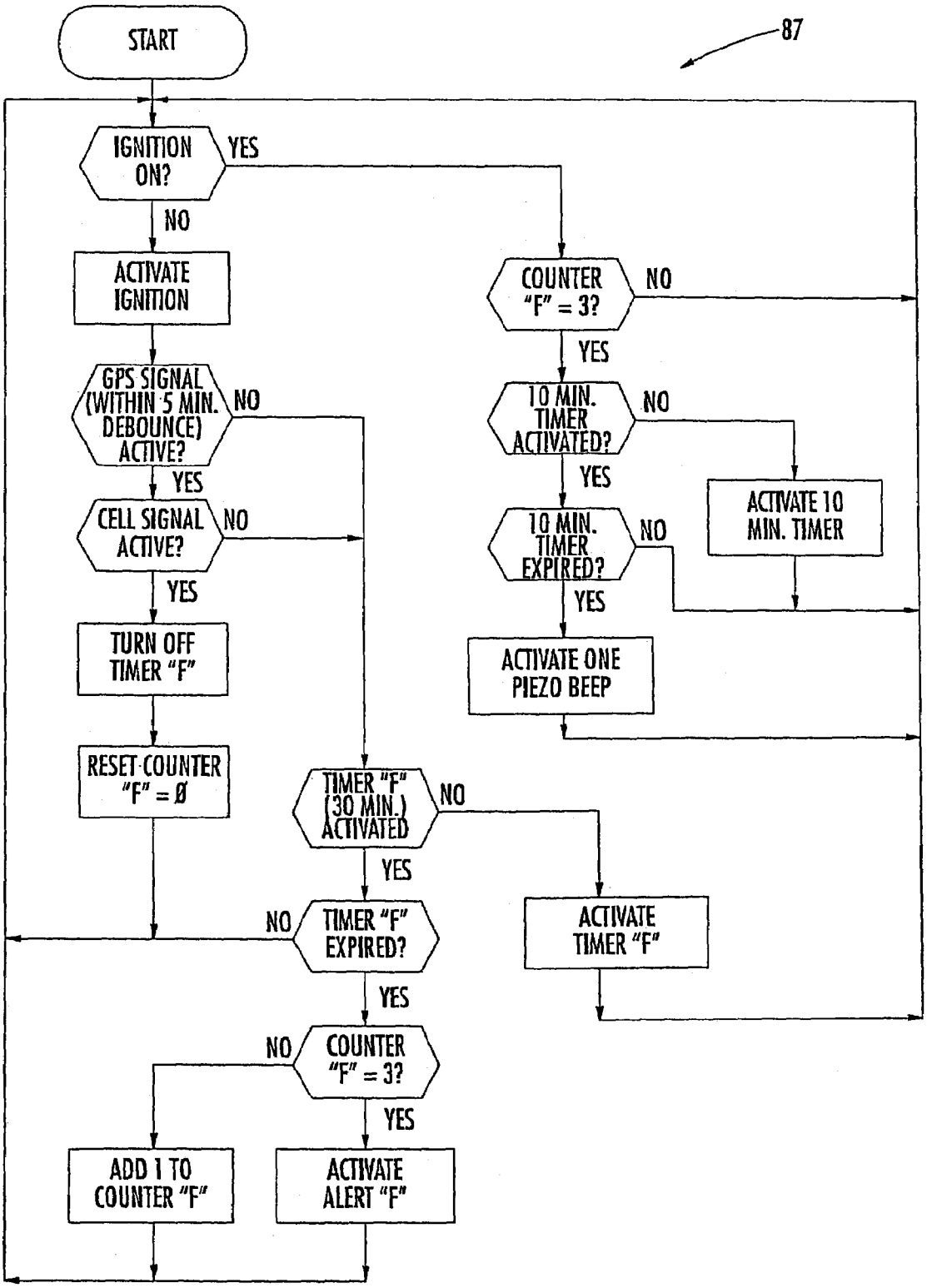
87
START
IGNITION ON?
YES
NO
ACTIVATE IGNITION
GPS SIGNAL (WITHIN 5 MIN. DEBOUNCE) ACTIVE?
NO
YES
CELL SIGNAL ACTIVE?
NO
YES
TURN OFF TIMER "F"
RESET COUNTER "F" = Ø
TIMER "F" (30 MIN.) ACTIVATED
NO
YES
TIMER "F" EXPIRED?
NO
YES
COUNTER "F" = 3?
NO
YES
ADD 1 TO COUNTER "F"
ACTIVATE ALERT "F"
ACTIVATE TIMER "F"
COUNTER "F" = 3?
NO
YES
10 MIN. TIMER ACTIVATED?
NO
YES
ACTIVATE 10 MIN. TIMER
10 MIN. TIMER EXPIRED?
NO
YES
ACTIVATE ONE PIEZO BEEP

FIG. 9.

VEHICLE TRACKER INCLUDING INPUT/OUTPUT FEATURES AND RELATED METHODS

This application is a continuation of Ser. No. 09/859,972 filed on May 17, 2001.

RELATED APPLICATIONS

The present application is based upon copending provisional application serial NOs. 60/264,811 filed on Jan. 29, 2001; 60/258,005, filed Dec. 22, 2000; 60/251,552, flied Dec. 6, 2000; 60/252,125, filed Nov. 20, 2000; 60/236,890, filed Sep. 29, 2000; 60/246,463, filed Nov. 7, 2000; 60/222,777, filed Aug. 3, 2000; and 60/205,178, filed May 17, 2000, the entire contents of each of which are incorporated herein by reference.

FIELD OF THE INVENTION

The present invention relates to the field of vehicle devices, and, more particularly, to a tracking and alerting system for a vehicle.

BACKGROUND OF THE INVENTION

Motor vehicles, such as passenger cars, trucks, busses, fleet vehicles, etc. are widely used and knowing the locations of such vehicle is often desired. For example, should a vehicle be stolen, it would be beneficial to know the vehicle's location so that authorities could be promptly and accurately directed to retrieve the vehicle. Indeed, the tracking system could plot the getaway path of the thief.

For a company with hired drivers, it may desirable to know the driver's whereabouts during the course of the day. Similarly, a rental car agency or other fleet operator, for example, may wish to know the whereabouts of its fleet of vehicles.

It may also be desirable to track the location of a vehicle as it used throughout the course of a normal day. For parents of younger or older drivers, for example, knowledge of the vehicle's location may provide some assurance that the driver is at designated locations and following a prescribed route.

A number of patents disclose various systems and approaches to tracking vehicles. For example, U.S. Pat. No. 5,223,844 discloses a tracking system including a control center and a mobile unit installed in the vehicle. The mobile unit may send security warnings to the command center via a wireless transceiver. Position information for the vehicle is determined using a GPS receiver at the vehicle.

U.S. Pat. No. 5,515,043 discloses a similar system which may send one or more preprogrammed telephone messages to a user when away from the vehicle. The user may remotely access location information or cause certain commands to be carried out by entering a personal identification number (PIN).

The widespread availability and use of the Internet has prompted a number of vehicle tracking systems to also make use of the Internet. For example, TelEvoke, Inc. proposed such a system in combination with Clifford Electronics. The system was to provide notification, control and tracking services via the telephone or the Internet. Users could be notified via phone, e-mail, or pager of events such as a car alarm being triggered. Users could control the vehicle remote devices via phone, web, or PDA such as unlocking car doors. Additionally, users could track TelEvoke-enabled vehicles on the Internet or via the telephone. An Internet map could be viewed by the user showing the actual and prior vehicle locations. TelEvoke offered its services via a centralized fully automated Network Operations Center. To reduce the communications costs, it was proposed to use the control channel of the cellular telephone network.

There are, of course, a number of vehicles which come from the manufacturer with some form of security system already installed. In addition, a number of vehicles are also equipped with aftermarket security systems. Many conventional vehicle tracking units may not be readily installed in vehicles, particularly those vehicles already including a vehicle security system. In addition, complexity of installation may significantly increase the system costs.

SUMMARY OF THE INVENTION

In view of the foregoing background, it is therefore an object of the invention to provide a vehicle tracking unit and related methods that permit ready interface to devices in the vehicle, such as those devices which may be part of an existing vehicle security system.

This and other objects, features and advantages in accordance with the present invention are provided by a vehicle tracking system comprising a vehicle tracking unit for a vehicle of a type including an alarm indicator, and a monitoring station receiving the alarm indication alert from the vehicle tracking unit. The vehicle tracking unit may include a vehicle position determining device, a wireless communications device, and a controller connected to the wireless communications device and the vehicle position determining device. The controller may monitor signals relating to activation of the vehicle alarm indicator and send an alarm indication alert, such as with position information from the vehicle position determining device, and using the wireless communication device.

More particularly, the controller may send an alarm indication alert responsive to a continuous activation of the alarm indicator for greater than a predetermined time. Alternately, or in addition thereto, the controller may send an alarm indication alert responsive to a repetitive pattern of alarm indicator activations. In other words, the controller may be configured to distinguish between normal operation of a vehicle horn by the driver, and activation of the horn by a security system. The controller may also monitor signals of at least one of a first and second polarity. Accordingly, the tracking unit may be readily interfaced to vehicles including security systems.

In one variation, the controller monitors signals to the vehicle alarm indicator. In another variation, the controller monitors signals of voltage dips of the vehicle battery. The vehicle alarm indicator may comprise a vehicle horn, and/or a vehicle siren.

The vehicle position determining device may include a Global Positioning System (GPS) device. The wireless communications device may comprise a cellular telephone communications device, such as operating over a cellular control channel.

The monitoring station may comprise a user interface for accepting at least one command from a user and sending at least one alert to the user. For example, the user interface may include an Internet interface, and/or a telephone network interface.

Another advantageous aspect of the invention relates to compatibility of the outputs of the vehicle tracking unit. More particularly, the controller may include a dual polarity compatible output for a vehicle device, such as the vehicle

alarm indicator. The controller may further monitor signals relating to activation of the vehicle alarm indicator and send an alarm indication alert with position information from the vehicle position determining device and using the wireless communication device.

The controller may generate a first polarity output pulse followed by a second polarity output pulse on the dual polarity compatible output. The controller may also generate a repeating pattern of a first polarity output pulse followed by a second polarity output pulse on the dual polarity compatible output. In yet other embodiments, the controller may sense an actual polarity of the device and thereafter use the actual polarity for the dual polarity compatible output.

Where the vehicle device is a vehicle horn, the controller may typically be configured to generate a negative polarity output on the dual polarity compatible output. Conversely, wherein the vehicle device is a vehicle alarm indicator siren, the controller may be configured to generate a positive polarity output on the dual polarity compatible output.

One method aspect of the invention is for operating a vehicle tracking unit for a vehicle of a type comprising a vehicle alarm indicator. The vehicle tracking unit may include a vehicle position determining device, and a wireless communications device. The method preferably includes determining position information of the vehicle using the vehicle position determining device, determining an alarm condition based upon at least one of activation of the vehicle alarm indicator continuously for greater than a predetermined time and activation of the vehicle alarm indicator in a repetitive pattern, and sending an alarm indication alert from the wireless communications device responsive to determining the alarm condition.

Another method aspect also relates to operating such a vehicle tracking device. The method preferably includes using the controller to generate a dual polarity compatible output for the vehicle device.

BRIEF DESCRIPTION OF THE DRAWINGS

FIG. **1** is a simplified block diagrams of a vehicle tracking system in accordance with the present invention.

FIG. **2** is a more detailed block diagram of the vehicle tracking unit as shown in FIG. **1**.

FIG. **3** is more detailed block diagram of the monitoring station as shown in FIG. **1**.

FIG. **4** is a flowchart for operation of the vehicle tracking system as shown in FIG. **1** illustrating a vehicle stolen alert.

FIG. **5** is a flowchart for operation of the vehicle tracking system as shown in FIG. **1** illustrating a vehicle alarm sounding alert.

FIG. **6** is a flowchart for operation of the vehicle tracking system as shown in FIG. **1** illustrating a vehicle speeding alert.

FIG. **7** is a flowchart for operation of the vehicle tracking system as shown in FIG. **1** illustrating an unauthorized transmitter learned alert.

FIG. **8** is a flowchart for operation of the vehicle tracking system as shown in FIG. **1** illustrating a low battery alert.

FIG. **9** is a flowchart for operation of the vehicle tracking system as shown in FIG. **1** illustrating a GPS or cellular unit failure alert.

DETAILED DESCRIPTION OF THE PREFERRED EMBODIMENTS

The present invention will now be described more fully hereinafter with reference to the accompanying drawings in which preferred embodiments of the invention are shown. This invention may, however, be embodied in many different forms and should not be construed as limited to the illustrated embodiments set forth herein. Rather, these embodiments are provided so that this disclosure will be thorough and complete, and will fully convey the scope of the invention to those skilled in the art. Like numbers refer to like elements throughout.

Referring to FIGS. **1**–**3**, the vehicle tracking system **20** in accordance with the invention is now initially described. The vehicle system **20** illustratively includes a vehicle tracking unit **25** to be mounted in the vehicle **21** and a monitoring station **30** which is remote from the vehicle and which is typically in a fixed location. In the illustrated embodiment, the vehicle tracking unit **25** interfaces with various vehicle devices, such as may include security sensors, door locks, etc. as will be appreciated by those skilled in the art.

The vehicle tracking unit **25** is also illustratively connected to a separate vehicle security system **27** as may already be installed in the vehicle **21**, from the factory or installed as an aftermarket product. Those of skill in the art will appreciate that in some embodiments of the vehicle tracking system **20** a separate vehicle security system **27** may not be needed, and/or various features thereof can be readily incorporated in the vehicle tracking unit **25**.

The monitoring station **30** may typically service a number of subscribers **31**. As shown perhaps best in FIG. **3**, the monitoring station **30** may include a user interface, such as the schematically illustrated telephone network interface **33** and the internet interface **34** which are schematically coupled to a telephone **35**, and a computer **36**, respectively. Of course in other embodiments, other interfaces may be used and only one of the illustrated interfaces may be needed. Those of skill in the art will also recognize that messages may be sent to a subscriber or user via preprogrammed voice messages, e-mail messages, facsimile messages, pager alerts, etc. In addition commands or instructions from the subscriber can also be input to the monitoring station **30** via the telephone network interface **33** and/or the internet interface **34**, from the subscribers telephone **35** or computer **36**.

The monitoring station **30** is illustrated connected to a cellular telephone tower **32** which, in turn, may communicate with the vehicle tracking unit **25** in some embodiments. Of course, in other embodiments other communications approaches are also contemplated, such as, for example, including satellite communications.

The monitoring station **30** may typically include the necessary modems, and other communications electronics, and computers for its functions which are described in greater detail below. The configuration of such components and their details will be readily apparent to those skilled in the art. Accordingly, no further discussion of these details is needed.

Referring now more specifically to FIG. **2**, additional details of the vehicle tracking unit **25** and devices at the vehicle are now further described. The vehicle tracking unit **25** illustratively includes a controller **40**, a vehicle position determining device **42**, and a wireless communications device **44** connected together. The vehicle position determining device **42** may be provided by a GPS receiver, for example. The GPS receiver typically operates by receiving multiple signals from spaced apart satellites **38** as will be appreciated by those skilled in the art.

In other embodiments, the vehicle position determining device **42** may be provided based upon communications with the cellular telephone network, or based upon other

satellite transmissions, for example. As a particular example, time of arrival techniques are available based upon multiple reception paths to determine position via the cellular telephone network as will be appreciated by those skilled in the art. The vehicle position determining device **42** also illustratively includes an indicator **43** associated therewith, such as for indicating an operating mode, or proper operation of the device as will be addressed in greater detail below.

The wireless communications device **44** may be provided by a cellular telephone transceiver configured to operate on a control channel of the cellular network. Such a control channel may provide nearly universal coverage for the tracking system **20** as will be appreciated by those skilled in the art. In addition, the control channel may offer relatively inexpensive communications between the monitoring station **30** and the vehicle tracking unit **25** as will be appreciated by those skilled in the art. The wireless communications device **44** also illustratively includes an optional status indicator **45** with a similar function as the indicator **43** for the vehicle position determining device.

The wireless communications device **44** in other embodiments, may transmit in the voiceband of the cellular network. Alternately, the wireless communications device may communicate over other networks, such as over satellite, or via wireless internet services, as will be appreciated by those skilled in the art.

The controller **40** illustratively includes a central processing unit (CPU) **50** or other logic circuitry which is connected to a clock signal generator **51** and a memory **52**. In other embodiments, the memory **52** may be embedded memory in the CPU **50**. The controller **40** also includes schematically illustrated input/output circuitry **53** to interface with various vehicle devices. In particular the input/output circuitry **53** may provide dual polarity compatibility for one or more inputs or outputs as will described in greater detail below. One or more of the terminals of the input/output circuitry **53** may also provide both input and output functions as will also be described in greater detail below. This may significantly simplify and accelerate installation of the vehicle tracking unit **25** in the vehicle **21**.

Also illustratively shown as part of the vehicle tracking unit **25** are a back-up battery **54**, and switch **55** connected thereto for selectively powering certain of the components based upon the controller **40**. Of course, the vehicle **21** also includes an electrical system including the vehicle battery **61**. Powering of the vehicle tracking unit **25** is described in greater detail below.

The vehicle **21** also includes a number of other components that may relate to vehicle tracking, security, and/or convenience features provided by the vehicle tracking system **20**. For example, the vehicle **21** may include one or more door lock actuators **62**, an optional remote starting device **63**, a starter interrupt device **66** and an alarm indicator **67**. For example, the alarm indicator may be provided by a vehicle horn or vehicle siren, and/or flashing of the lights.

The optional separate security system **27** illustratively includes a vehicle security controller **28** and a receiver **29** connected thereto. As is conventional, the vehicle security system **27** may be switched between armed and disarmed modes, for example, by one or more uniquely coded remote transmitters **60**. The vehicle security controller **28** may also be capable of learning a new uniquely coded remote transmitter **60** as will be appreciated by those skilled in the art. The vehicle security controller **28** also illustratively is connected to the starter interrupt device **66** and the alarm indicator **67**.

For ease of explanation, a number of the features of the vehicle tracking system **20** are now described. The vehicle tracking system **20** includes a number of features that may simplify installation and maintenance. For example, as shown in FIG. **2**, the vehicle tracking unit **25** may have a test switch **71** connected to the controller **40**.

In normal operation, the controller **40** may be called upon to operate at least one vehicle device. Of course, the controller **40** also cooperates with the wireless communications device **44** and the vehicle position determining device **42** to determine and send vehicle position information to the monitoring station **30**. Moreover, the controller **40** may be switchable to a test mode for test operation of the at least one vehicle device responsive to activation of the test switch **71**.

In some embodiments, the at least one vehicle **15** device may be a plurality of vehicle devices that are tested by operation in sequence. For example, the at least one vehicle device may comprise at least one door lock actuator **62**. The at least one vehicle device may also comprise the starter interrupt device **66**, or the engine remote starter **63** if remote starting is an implemented feature. The at least one vehicle device which is tested, may also be the alarm indicator **67**. Accordingly, an installer, for example, can quickly check that the tracking unit has been properly installed.

To further provide for ready determination of proper operation of the vehicle tracking unit **25**, one or both of the position determining and wireless communications devices **42**, **44** may include associated indicators **43**, **45** as mentioned briefly above, and which provide an indication relating to proper operation. Each indicator **43**, **45** may indicate a mode of operation of the device, its proper operation, or a partial or complete failure of the device.

Another aspect of the invention is that the controller **40** may provide a selectable polarity for the at least one vehicle device based upon sensing thereof. Accordingly, a predetermined activation of the test switch **71** may cause the controller **40** to sense and select the proper polarity. Pressing the test switch **71** for a predetermined time or in a predetermined pattern may sense and set the polarity.

Another feature of the vehicle tracking unit **25** and vehicle tracking system **20** relates to conservation of the number of codes or messages that need to sent to the vehicle tracking unit. In particular, the controller **40** may have a plurality of different controller states and respond differently to a same message from the monitoring station **30** at different times depending upon the controller state at a given time. Accordingly, a number of codes or messages used by the system can be conserved. Various messages are described in greater detail below.

A controller state may change based upon several different occurrences or events. For example the controller may change states in response to a change in at least one vehicle device, or based upon a message received by the wireless communications device **44** from the monitoring station **30**, and/or based upon elapsed time. The controller states, for example, may include an alert sent state based upon an alert message being sent from the wireless communications device **44**. Thereafter, receipt of a predetermined message by the wireless communications device **44** when the controller **40** is in the alert sent state may confirm receipt of the alert message by the monitoring station.

Receipt of the predetermined message by the wireless communications device **44** when the controller **40** is in another state different than the alert sent state may thus cause a different response by the controller. The alert sent state may comprise at least one of an vehicle stolen alert sent state, a vehicle alarm sounding alert sent state, a vehicle

speeding alert sent state, an unauthorized remote transmitter alert sent state, a low vehicle battery alert sent state, and a device malfunction alert sent state. The various alert messages and confirmation thereof are described in greater detail below.

The code or message conservation aspects of the vehicle tracking system **20** also permit sending a sequence of codes or messages within a predetermined time to also cause a different response at the vehicle tracking unit **25**. In other words, the plurality of controller states may comprise a received first message state based upon a first message being received by the wireless communications device **44** from the monitoring station **30**. Receipt of a second message by the wireless communications device **44** when the controller **40** is in the received first message state, such as within a predetermined time window, for example, may thus cause a different response by the controller than does receipt of the second message when the controller is in another state than the received first message state.

The plurality of controller states may comprise a vehicle finder state sounding an audible signal via the alarm indicator **67** at the vehicle **21**. In this state the controller **40** would bypass sending a vehicle alarm sounding alert to the monitoring station **30**.

Another aspect of the vehicle tracking system **20** is the provision of certain power conservation and management techniques, such as to permit extended periods where the vehicle **21** is not operation. During such extended periods, the vehicle battery **61** provides power to the vehicle tracking unit **25** as well as other vehicle devices. Accordingly, the voltage of the vehicle battery **61** drops over time. The vehicle tracking unit **25** may provide a significant drain on the vehicle battery **61** because of the power consumed by the wireless communications device **44** during transmission as will be appreciated by those skilled in the art.

The vehicle position determining device **42**, the wireless communications device **44** and the controller **40** may be considered as defining a power load of the vehicle tracking unit **25**. The controller **40** may operate the schematically illustrated power switch **55** to isolate the back-up battery **54** from the power load as a voltage of the vehicle battery **61** drops until reaching a threshold. After or below the threshold the controller **40** may cause the back-up battery **54** to selectively power only a first portion of the power load while a second portion of the power load remains powered by the vehicle battery.

For example, the wireless communications device **44** may have a higher operating voltage than the vehicle position determining device **42**. The first portion of the power load that is selectively powered despite the low vehicle battery voltage may thus be the wireless communications device **44**. In particular, the wireless communications device **44** may be powered for transmission. Accordingly, the back-up battery **54** can be saved for limited communication using the higher voltage wireless communications device **44**. This provides useful features even after an extended period during which the vehicle **21** is left unattended and the vehicle battery **61** gradually discharges.

To further conserve power, the controller **40** may reduce operation of the power load as vehicle battery voltage falls. Conversely, the controller **40** may restore operation of the power load based upon the voltage of the vehicle battery **61** rising again, such as upon being recharged.

Also relating to power consumption, the controller **40** further cause transmission of a low vehicle battery voltage alert to the monitoring station **30** based upon the voltage of the vehicle battery **61** falling bellow the threshold. The user or subscriber may cause the monitoring station **30** to issue a remote start command. The controller **40** may then generate a remote start output to the remote start device **63** to thereby start the engine and recharge the vehicle battery.

Another feature of the vehicle tracking system **20** is that the vehicle tracking unit **25** may be readily installed and connected to a vehicle **21**, such as in the illustrated embodiment where the vehicle includes a starter interrupt device **66** and a separate vehicle security controller **28**. More particularly, the controller **40** may switch between an armed mode and a disarmed mode based upon operation of the engine starter interrupt device **66**. The controller **40** when in the armed mode may cooperate with the wireless communications device **44** to send an alert message to the monitoring station **30** and including vehicle position information, for example, based upon the vehicle position determining device **42**. The controller **40** is also for selectively operating the engine starter interrupt device **66** to provide additional security features.

In one advantageous embodiment, the controller **40** preferably comprises a combination input and output terminal for connection to the engine starter interrupt device. This terminal is at the input/output circuitry **53** and is schematically illustrated by reference numeral **72**. The controller **40** may switch to the armed mode when in the disarmed mode and based upon the engine starter interrupt device **66** being operated to disable engine starting. Conversely, the controller **40** may switch to the disarmed mode based upon the engine starter interrupt device **66** being operated to enable engine starting. In other words, the vehicle tracking unit **25** can piggyback its arming and disarming off the existing vehicle security system **27**, for example.

The controller **40** may also selectively operate the engine starter interrupt device **66** based upon a command message from the monitoring station **30**. The controller **40** may selectively operate the engine starter interrupt device **66** based upon a command message from the monitoring station **30**. Alternately, or in addition thereto, the controller **40** may selectively operate the engine starter interrupt device **66** based upon the ignition switch **65**.

The following descriptive portions relate to various user or subscriber notifications and features provided by the vehicle tracking system **20**. Of course, the controller **40** preferably cooperates with the wireless communications device **44** to send an alert message. The monitoring station **30** may comprise a user interface, such as one or both of the telephone network or internet interfaces **33**, **34**, respectively (FIG. **3**), for generating a sequence of alert message notifications based upon receiving the alert message sent from the vehicle tracking unit **25**. More particularly, the monitoring station interface permits canceling any remaining alert message notification based upon a cancellation command response from a user or subscriber having already received the alert message notification. The user may send the cancellation response via the telephone **35** or computer **36** (FIG. **3**), for example. Thus, if the user may be reached at different telephone numbers or different users are desirably notified of the alert, this aspect of the vehicle tracking system **20** can make the notifications efficiently and without making unnecessary notifications.

The vehicle tracking system **20** may provide any of a number of very useful alerts, as discussed herein. For example, the alert message sent from the vehicle tracking unit may comprise at least one of an vehicle stolen alert message, and a vehicle alarm sounding alert message. The alert message may be one a vehicle speeding alert message, and a vehicle acceleration alert message. In addition, the

alert message may comprise an unauthorized remote transmitter alert message. Also, the alert message may be at least one of a low vehicle battery alert message, and a device malfunction alert message.

The speeding alert may be based upon exceeding a speed threshold for greater than a certain time, which may be user selectable. The acceleration alert may also be useful as such is also indicative of aggressive driving along with the speeding alert. The unauthorized remote transmitter alert increases overall security since a user will be notified if a would-be thief learns an unauthorized transmitter to operate the controller. These alerts are described in greater detail below.

The vehicle tracking system **20** may be implemented as a service to a subscriber. In other words, the subscriber pays a monthly fee for the service. Accordingly, it may be important to encourage a user to register. Similar subscriber or registrations systems in the past have suffered revenue losses since some users would wait to activate the system until the vehicle was stolen. In other words, the user would only subscriber or register and pay a single month's fee.

In accordance with this aspect of the vehicle tracking system **20** prompt user registration is encouraged. In particular, the vehicle tracking unit **25** may include the user registration reminder indicator **56** and the controller **40** may be switchable from an unregistered mode to a registered mode. In the registered mode, the controller **40** may cooperate with the wireless communications device **44** and the vehicle position determining device **42** to determine and send vehicle position information to the monitoring station **30**. In the unregistered mode, the controller **40** may activate the user registration reminder indicator **56** to encourage registration by the user.

The controller **40** may be switchable to the registered mode based upon an activation message from the monitoring station **30**. For example, when the registration payment has been received, the monitoring station can send one or more messages to the vehicle tracking unit **25** to stop activation of the registration reminder indicator **56**. The indicator **56** may be audible, visual or both. For example, the registration reminder indicator **56** could be a beeping sound generated by a small piezoelectric transducer every ten minutes or so when the ignition **65** is on.

In other words, the user registration reminder indicator **56** may provide a minor but irritating annoyance to the user to encourage registration. Upon successfully registering, the annoyance is abated. Accordingly, a relatively straightforward approach is provided to encourage user registration.

Along these lines, the controller **40** when in the unregistered mode may have reduced features compared to the registered mode. For example, the controller **40** when in the unregistered mode may be restricted or limited in sending messages with the wireless communications device **44**. Accordingly, usage of the wireless communications network may be reduced. Transmissions from the vehicle tracking unit **25** may be also be beneficially suppressed during original installation, for example.

Returning again to features of the vehicle tracking unit **25** which facilitate installation, the controller **40** may send an alarm indication alert responsive to a continuous activation of the alarm indicator **67** for greater than a predetermined time. Alternately, or in addition thereto, the controller **40** may send an alarm indication alert responsive to a repetitive pattern of alarm indicator **67** activations. In other words, the controller may be configured to distinguish between normal operation of a vehicle horn by the driver, and activation of the horn by the security system **27**. As mentioned above, the controller **40** may also monitor signals of at least one of a first and second polarity. The controller **40** thus advantageously piggybacks off the alarm indication generated by the vehicle security system **27** to determine and send a vehicle alarm sounding alert to the monitoring station **30**.

In one variation, the controller **40** may monitor signals delivered directly to the vehicle alarm indicator by the vehicle security controller **28**. In another variation, the controller **40** monitors signals of voltage dips of the vehicle battery **61**. Circuitry is conventionally and readily available for both such functions as be readily appreciated by those skilled in the art.

The controller **40** may also include a dual polarity compatible output in the input/output circuitry **53** for a vehicle device, such as the vehicle alarm indicator **67**. The controller **40** may further monitor signals relating to activation of the vehicle alarm indicator **67** and send an alarm indication alert with position information from the vehicle position determining device and using the wireless communication device.

For the dual polarity output compatibility, the controller **40** may generate a first polarity output pulse followed by a second polarity output pulse. The controller **40** may also generate a repeating pattern of a first polarity output pulse followed by a second polarity output pulse on the dual polarity compatible output. In yet other embodiments, the controller **40** may sense an actual polarity of the device and thereafter use the actual polarity for the dual polarity compatible output.

Where the vehicle device is a vehicle horn, the controller **40** may typically be configured to generate a negative polarity output on the dual polarity compatible output. Conversely, wherein the vehicle device is a vehicle alarm indicator siren, the controller **40** may be configured to generate a positive polarity output on the dual polarity compatible output.

Another aspect of the vehicle tracking system **20** relates to conserving memory space and/or reducing transmission time over the communications network. In accordance with this advantageous feature, the controller **40** may determine the vehicle position information including a vehicle location and an associated stationary period for each occurrence of the vehicle remaining stationary for greater than a predetermined period. In one embodiment, the controller **40** may cooperate with the wireless transmission device **44** to send the vehicle position information to the monitoring station based upon each occurrence of the vehicle remaining stationary for greater than the predetermined period. In this embodiment, the monitoring station **30** may associate a time with each occurrence of the vehicle remaining stationary for greater than the predetermined period. In other words, the monitoring station **30** may time stamp the received information.

In another embodiment, the controller **40** cooperates with the wireless transmission device **44** to send the vehicle position information to the monitoring station **30** for a plurality of occurrences of the vehicle remaining stationary for greater than the predetermined period. In this embodiment, the controller **40** may associate a time with each occurrence of the vehicle remaining stationary for greater than the predetermined period. In other words, the controller time stamps the position and stationary period information.

As an example, the predetermined time which determines whether the vehicle **21** is stationary and the position should be determined, may be less than about three minutes. This time may filter out vehicle stops in normal traffic, but which will keep track of stops where the driver likely leaves the

vehicle **21**. Accordingly, only the important information necessary to track the vehicle need be stored and/or transmitted thereby reducing the system costs. If the vehicle **21** is stationary overnight, for example, unnecessary position information need not be determined, stored, and/or transmitted to the monitoring station **30**.

The controller **40** may comprise the memory **52** for storing the vehicle position information therein. In one configuration, the controller **40** downloads the vehicle position information from the memory **52** to the monitoring station **30** based upon a predetermined schedule. In another configuration, the controller **40** downloads the vehicle position information from the memory **52** to the monitoring station **30** based upon a predetermined event. In yet another configuration, the controller **40** downloads the vehicle position information from the memory **52** to the monitoring station **30** based upon a predetermined percentage of memory usage.

Having now described certain general features and advantages of the vehicle tracking system **20**, this description now turns to additional specific details which are provided as examples. In particular, vehicle tracking system **20** preferably implements one or more of the following features:

1. Detects the vehicle being stolen and transmits a signal to the monitoring station to contact up to 3 people, for example, predetermined by the user, of theft of the vehicle and then starts tracking the vehicle. The contact may be by one or more of the following: an e-mail message, a pager alert, a cellular telephone call, or other telephone call.

2. Detects an optional vehicle security or alarm system activation and transmits a signal to the monitoring station to contact up to 3 predetermined people to inform them the vehicle's alarm is being activated.

3. Detects an optional vehicle alarm system's remote PANIC activation and transmits a signal to the monitoring station to contact up to 3 predetermined people to inform them of the vehicle's PANIC being activated.

4. Detects a vehicle being programmed to operate from an unauthorized remote transmitter, key transponder, other transponder, or other device that has a unique coding, and the vehicle unit transmits a signal to the monitoring station to contact up to 3 predetermined people to inform them of this occurrence. The system can also make available information relating to a number of such coded devices, or a change therein, or when a change occurred. A message can be sent to the user or the information can be available to the user on the WEB site. The vehicle would be equipped with a security system as disclosed in U.S. Pat. No. 5,654,688, for example, which determines an unauthorized transmitter and provides an alert feature. This patent is incorporated herein in its entirety by reference.

5. Detects the vehicle traveling over a predetermined speed, such as for a predetermined time, and transmits a signal to the monitoring station to send a message, such as an e-mail informing the user (and/or others) of this occurrence. Of course, the message could also be sent via a telephone call or page, should additional urgency be required. The vehicle's predetermined maximum speed limit and duration thereof can be selected by the user.

6. Detects a low battery voltage such as for a predetermined time and transmits a signal to the monitoring station to contact up to **3** predetermined people to inform them of vehicle's low battery voltage. This is especially advantageous during winter so that the vehicle could be started, for example, to prevent a problem before it happens). The time setting is preferably selectable by the user.

7. Detects the vehicle not moving for a predetermined time and transmits a signal to the monitoring station to send, for example, a nightly e-mail informing the user of all the vehicle's location and stationary time occurrences. The stationary time length is also selectable. This may be advantageous to encourage patrolling personnel not to remain for a long time in a same location.

8. The vehicle unit preferably includes a back-up battery system making it more reliable.

The vehicle unit may be relatively inexpensive. In addition, the monitoring fee that includes sending up to 60 e-mails and making up to 6 phone calls per month, may also be relatively low. The relatively low monitoring fee is based, at least in part, on the current relatively low rates charged for use of the control channel of the cellular telephone network. It is also noted that access to the control channel provides coverage for almost the entire U.S., for example.

The user or subscriber also preferably has access to an Internet site that will display a map and silently contact the vehicle to acquire it's current location, speed, direction of travel, and previous multiple locations with speeds, for example, the user's personal identification number (PIN) can be quickly activated by a telephone call. No additional installation may be required.

Certain annual pre-pay package arrangements may be available. For example, up to 10 access entries per month can be provided on a low monthly billing. Up to 30 access entries could be provided also for a relatively low monthly fee.

The present invention provides a number of other significant advantages including optional access from any phone or from any computer to access the monitoring station internet site. The user may control various vehicle functions remotely via the telephone or the internet site. The only charge may be for additional equipment and installation.

Additional features can also be included with the system and subscribed to by the user in accordance with the invention. For example, these include Hijack, Car Finding, Unlock Doors and Unauthorized Transmitter Alert Features. The equipment and installation is relatively inexpensive. For the hijack feature: from any phone or computer, the user may activate vehicle starter interrupt and sound the horn until the vehicle is retrieved (Command **4**).

For the Car Finding feature: from any phone or computer, the user may activate the vehicle's horn, or siren and sound same for 30 seconds. This allows the user to find his vehicle in a crowded parking lot (Command **5**).

For the Lock/Unlock vehicle doors feature: from any phone or computer user a predetermined command (Command **7**) activates unlocking of vehicle doors to retrieve keys, for example, that may have been accidentally locked inside the vehicle. Of course, the system can also be used to lock vehicle doors if this was forgotten (Command **6**). The unauthorized transmitter alert feature is similarly selected as described above.

In addition, a remote vehicle start feature may also be provided, such as to start the vehicle's engine to heat or cool the vehicle prior to entry. The equipment and installation for remote starting may be relatively low. Some further details of a specific embodiment of the vehicle tracking unit **25** are provided below as relating to use of red and green LED indicators as may be coupled to the controller **40** and operated thereby. Also various representative wires, designated by color, are provided as an example embodiment.

The red LED verifies the GPS receiving signal. With a yellow wire having positive 12 volts, the red LED blinking indicates searching GPS location, constant indicates found

location, and off indicates no GPS signal found. With the yellow wire not having positive 12 volts, if the red LED is off, the LED is not functioning.

The green LED verifies receiving the cell tower signal. With the yellow wire having positive 12 volts, blinking indicates the cell control channel signal is detected, constant indicates sending a micro burst signal (LED stays on 5-seconds after each transmission, and off indicates no cell tower signal received. With yellow wire not having positive 12 volts, off indicates the green LED is not functioning.

An example of representative DIP switch feature selection is as follows. A first switch may be used for the adding orange wire for controlling arm/disarming of system. When on, the orange wire controls arm/disarm as follows: to arm, the orange wire is grounded and yellow wire does not have 12 volts positive. To disarm, the orange wire is not grounded. When the first switch is off, then only the yellow wire controls arm/disarm as follows: to arm, the yellow wire is without 12 volts positive, and 30 seconds after continued arm mode then orange wire activates a constant 500 ma grounded output to operate an external starter interrupt relay until the system is disarmed. To disarm, the yellow wire is connected to 12 volts positive.

A main 5-pin plug may be provided on the vehicle unit and connected as follows:

1. The Red Wire is connected to the 12 vdc power. An alert warning "E" is given if the system is armed and the battery voltage becomes lower than 11-volts for longer than. ## minutes. This alert feature "E" will not operate again until the voltage is above 12 volts to re-set this feature.

2. The black wire is connected to ground.

3. The yellow wire is connected to the ignition 12 volts so that if the key is on, 12 volts is supplied thereto and if the key is off, the yellow wire is connected to ground. Further: if the system is in an armed mode and the Lat/Long changes, then Alert "A" is given. If the system is disarmed and within 2.5 seconds after the yellow wire receives 12 volts and the gray wire detects 3 or more positive pulses the system activates Alert "D". If the first DIP switch is in the off position then: if 12 volts is on yellow wire, the system is disarmed and the orange wire discontinues from the 500 ma ground, and if the yellow wire sees ground or neutral, then the system is armed and 30 seconds after the continued arm mode the orange wire activates a constant 500 ma grounded output to operate an external starter interrupt relay until system is disarmed

4. The gray wire is for input and output, and can be connected to an alarm siren or horn positive terminal. In addition:

a. With system armed and if the gray wire detects +12 v pulsing on/off or on constant for more than 10 seconds from an alarm siren or horn honking activation, then alert warning "B" alarm activation is given.

b. With system disarmed and if the gray wire detects +12 v pulsing on/off or on constant for more than 10 seconds from an alarm siren or horn honking activation, then alert warning "C" panic activation is given.

c. With system disarmed and if the Gray wire detects 3 or more 12 volt positive pulses within 2.5 seconds of yellow wire receiving 12 v+ and the gray wire by-pass not being activated, then alert warning "D" is given.

d. The gray wire bypass operates as follows:

i. After alert warning "B" bypass all future alert "B" signals until system is disarmed.

ii. After alert warning "C" bypass all future Alert "C" signals until system is armed.

iii. After alert warning "D" bypass all future alert "D" signals until no 12 volt pulses are detected on the gray wire within 3 seconds of the yellow wire having 12 volts.

e. With system armed or disarmed. The Output: Internal +12 v, 1 amp transistor with pulses 1 second on and 1 seconds off to activate siren or honk car horn or flashing light relay.

i. Non-stop activation from (Command "**4**")

ii. 30-second activation from (Command "**5**")

f. Turn off the above alert "A" from (Command "**1**").

5. The orange wire is for the starter interrupt and arm/disarm system, and operates as follows:

a. If first DIP switch is in the:

i. On position and: the orange wire has 12 volts or neutral, the system switches to the disarmed mode; the orange wire is grounded, then the system is switched to the armed mode; and the starter interrupt output will not automatically operate. Can only be activated from "Command #**4**"

ii. Off position and the orange wire does not effect the arming or disarming of the system; 30 seconds after system arms the orange wire will automatically activate constant 500 ma ground until the system is disarmed. And from "command #**4**". Connect to Starter interrupt relay output.

b. Command **4** activates Orange wire to have 500 ma. negative until Command 1 is received.

c. After Alert warning "B" is activated the first time it is thereafter bypassed while the orange wire remains grounded. Alert warning "B" is re-set to operate again **3** seconds after orange wire becomes ungrounded.

The vehicle unit may also include a Door Lock Plug configured as follows, for example. A green wire provides a 250 ma, negative 1 second pulse for Lock Doors. (Command "**6**"). A red wire provides a constant 12 v output from the red power wire. A blue wire provides a 250 ma., negative 1 second pulse for Unlock Doors (Command "**7**"). A pink wire provides a 250 ma., negative 1 second pulse for remote Car Starter (Command "**2**").

An installation test button may also be provided to work as follows. Pressing the button activates the orange wire for 10-seconds (starter interrupt), with these circuits in sequence. First, activates gray wire for 1-second. (siren/horn). After the first stops, activates green wire for 1 second to lock the doors. After the second stops, activate the blue wire for 1 second to unlock the doors. After the third stops, activate the pink wire for 1 second to activate optional item.

Representative warning alerts are as follows:

1. Alert Warning "A" (FIG. **4**): Automatic activation of "Command **8**" and the vehicle unit contacts monitoring station to instantly call 3 phone numbers with the message "Your Vehicle is stolen please confirm then call 911 to advise police of web site and your pin # so police can locate the vehicle". This is detected with the system armed and the GPS indicating movement. Bypasses all future alert warning "A" signals until the system is re-armed.

2. Alert Warning "B" (FIG. **5**): the vehicle unit contacts the monitoring station to instantly call 3 phone numbers with the following message "Vehicle alarm activated please confirm". This is with the system armed and detecting gray wire having 12 volts pulsing or on constant for longer than 10-seconds). After alert warning "B" is activated the first time, it is thereafter bypassed while the orange wire remains grounded. Alert warning "B" is re-set to operate again 3 seconds after orange wire becomes ungrounded.

3. Alert Warning "C" (FIG. **6**): the vehicle unit contacts the monitoring station to instantly send e-mail message "vehicle was traveling faster than your preset amount of "###" and time limit of "##" seconds. Indicates the vehicle speed and location that the speeding started and how long speeding accrued" (Detected from GPS).

4. Alert Warning "D" (FIG. **7**): the vehicle unit contacts the monitoring station to instantly call 3 phone numbers with the this message "Unauthorized remote transmitter was just programmed to operate your vehicle." This is with the system disarmed and the Gray wire detecting three or more 12 volt pulses within 2.5 seconds of yellow wire having seen 12 volts positive. All future alert "D" are bypassed until no 12 volt pulses are detected on the gray wire within 3 seconds of the yellow wire seeing 12 volts.

5. Alert Warning "E" (FIG. **8**): the vehicle unit contacts the monitoring station to instantly call 3 phone numbers with the message "Vehicle has low battery voltage and system has changed to low voltage mode". This is with the system armed and detecting the Red wire with lower than 11 volts for ## minutes. All future alert "E" are bypassed until, first, more than 13.5 volts are detected on the red wire and, second, after the yellow wire stops having positive voltage the red wire then must detect more than 12 volts.

The following are representative commands for use in the system:

Command **1**: Reset all circuits and system remains asleep until the ignition key is turned on. Resets the triggered mode and unit is asleep to prevent power drain on vehicle battery.

Command **2**: (Accessory activation) monitoring station Command to the system to activate Pink wire to pulse 250 ma negative for 1 second.

Command **3**: (Vehicle Location) Web site to indicate present location and past events in memory.

Command **4**: (Hijack or Stolen) monitoring station Command to vehicle system to activate:

a. Gray wire to pulse 1 sec on/1 sec off with 1 amp positive output and which continues until receive command # 1.

b. Orange wire to have 500 ma ground and which continues until receive command # 1.

Command **5**: (Car Find) monitoring station Command to system activating Gray wire for 30 seconds pulsing 1 sec on/1 sec off with **1** amp positive output.

Command **6**: (Lock Doors) monitoring station Command to system activating Green wire to pulse 1 second with 250 ma. negative.

Command **7**: (Unlock Doors) monitoring station Command to system to activate Blue wire to pulse 1 second with 250 ma. negative.

Command **8**: (Start Constant Vehicle Tracking) sends previous 2 events in memory and then every 120 seconds get update of location information sent to the Web site.

The system is also operable in a battery saver mode which operates as follows:

1. With the ignition key off, if the battery voltage drops below 11.5 volts for more than 5 seconds, the GPS verification wakes up to look:

a. Once instantly.

b. Once in 1 hour if at the same location.

c. Once in 6 hours if at the same location.

d. Once in 12 hours if at the same location.

e. Once every 24 hours if at the same location.

f. Activate alert "E" when the battery saver mode is activated, and bypass sending all future Alert "E" until the battery voltage goes above 13 volts for 10 minutes to reset this feature.

Another aspect of the invention relates to automatic vehicle alert e-mails sent containing some or all of the previous system events. This sending can be triggered as follows:

a) At a user selected predetermined time ## (01–24) of each day, or

b) At a predetermined memory fill level, such as full or near full.

In addition, each system event may contains one or more of the following:

a) Vehicle Location

b) Vehicle total time at location

c) Time of day

d) Mph traveling

e) Total time traveling above MPH

f) Direction traveling

g) Delta

h) Special Alert messages, if any, including:

i) GPS signal not received for longer than 5 minutes.

ii) Traveling above ###MPH for ## minutes.

iii) Vehicle is stolen.

iv) Alarm activated.

v) Unauthorized remote transmitter alert.

vi) Battery saver mode activated

vii) Command **1**: Reset all circuits and system remains asleep until the ignition key is turned on.

viii) Command **2**: (Accessory activation)

ix) Command **3**: (Vehicle Location was retrieved)

x) Command **4**: (Hijack or Stolen mode activated)

xi) Command **5**: (Car Find mode activated)

xii) Command **6**: (Locked Doors)

xiii) Command **7**: (Unlocked Doors)

xiv) Command **8**: (Started 2-second incremental Vehicle Tracking)

Another feature of the invention relates to the selectable threshold conditions causing an event to be recorded into the memory of the vehicle unit. For example, this may include: while the yellow wire has 12 volts, record events every "??" default 15 minutes time if the GPS location has changed. If the GPS location is same then only update stationary total time. If the GPS antenna is not receiving any signal then enter last known GPS location and with indication this was the last known GPS location before GPS signal stopped and how long no GPS signal was received, and enter GPS location in the on-hold file. When vehicle is traveling above ###MPH for ##-minutes.

The monitoring station may also provide a number of automated phone calls as described above. These may include:

1. The user's vehicle has issued a stolen alert:

a. If vehicle is stolen, after receiving the phone message the user then calls 911 to advise police of the theft, and gives the police the Web site address and an identification number, such as the user's PIN, to allows the police to locate where your vehicle has been, where it is now and keep tracking it until the police can retrieve the vehicle.

b. If this is a false alert due to vehicle being towed away for service, for example, then the user may press "1" to put the vehicle in an off mode. Once the ignition key is turned on again the system will reset back to its normal operation mode.

2. The user's vehicle has issued an alarm activated for more than 10 seconds alert. The system will not respond to this alert again until ignition key is turned on again to reset this feature.

3. The vehicle battery voltage is low or has been disconnected. The tracking system is in low voltage mode. The system will not respond to this alert again until the battery voltage goes above 13 volts for 10 minutes to reset this feature.

The backup battery may be sized according to the GPS receiver and processing power draw. In addition, the battery may also be sized based upon estimated micro burst transmitting power draw. Such transmission are typically at about 3 watts power to the antenna.

The system according to the invention including the vehicle unit and monitoring station provides a number of significant advantages and features. For example, the police may be directly contacted by the user when the vehicle is stolen. The user receives the telephone message from the monitoring station, and this is done without requiring the intervention of a manual security monitoring operator, such as an ADT operator, for example. In addition, once in the stolen mode, the vehicle unit will periodically continue to send out its location, so that the police may track the vehicle via the WEB, for example. This location sending feature may begin immediately, that is, without requiring the user to contact the vehicle to begin tracking. Having the vehicle contacting the monitoring station is considerably less expensive than other schemes where the vehicle is periodically polled via the cellular network, for example.

The system may also be interfaced to a breath alcohol sensor at the vehicle, for example, and this information recorded in memory. The information could be passed along to the monitoring station, which, in turn, could send out a notification message (e-mail or telephone) that the vehicle is being operated by a driver who may be impaired by alcohol. The vehicle's location could then be tracked to permit the police to detain the driver.

Another aspect of the unit is that it may be able to recognize the desirability to bypass certain security breach triggers or other events. For example, a car finding feature can be provided that will allow the user to sound the horn or siren when near the vehicle to help locate the vehicle, as in a crowded parking area. Without the bypass feature, the unit could recognize the horn or siren as a security breach and transmit such information to the monitoring center. In accordance with this aspect of the invention, the unit would recognize the car finding feature was activated and thereby bypass sending a security breach transmission, for example. Again, false alarms and unneeded usage and expense of the communications infrastructure would be avoided.

Yet another aspect of the invention relates to thwarting a would-be thief who attempts to disable the alarm by cutting the battery cable or power supplied to the system. The unit preferably includes a back-up battery. More particularly, upon being in an armed mode and sensing a breach of security, such as the hood opening, for example, the unit will send out a signal indicating the alarm or security breach and while the alarm is indicated, if the battery is disconnected then the unit will send out a message indicating the vehicle is stolen, and also providing the vehicle's current position. Accordingly, the would be thief is not able to defeat the security system by quickly disrupting power to the unit during an alarm indication or security breach. Also to prevent additional alerts, this message is prevented from being transmitting again until user returns to the vehicle to disarm the system and/or turn on the ignition so that the unit sees a voltage above 13 volts indicating the vehicle has started using the owner's ignition key. This aspect is further understood with reference to the enclosed flowchart labeled "Alert A" (FIG. **4**).

Still another aspect of the invention relates to how the unit can discriminate between ordinary usage or honking of the horn as compared to a security system triggered alarm. Most vehicle security systems will provide a pattern of horn soundings as an alarm indication, and this can be determined and used to reduce false alarm transmissions from the unit. For example, the unit can look at the number of leading and trailing edges of the power pulse used to sound the horn. A single pressing of the horn switch by the user will cause two edges within a predetermined time, such as about 10 to 12 seconds. Accordingly, the unit can be configured to not send a security breach transmission to the control center based upon detecting two transitions. Since a number of vehicle security systems may have a continuous sounding of the horn within the predetermined time, the unit can send the transmission upon detecting only a single transition.

A number of other vehicle security systems provide a series of pulses or horn soundings within the predetermined time. Accordingly, the unit may also be configured to send a security breach transmission upon detecting greater than a predetermined number of transitions, such as greater than nine, for example. This number is also typically higher than a user would generate honking the horn several times within the predetermined time. In other terms, the number of transitions of the horn pulses can be counted, and if equal to one, or greater than nine, for example, the transmission is triggered, and otherwise the sounding of the horn is ignored. Also to prevent additional alerts, this message is prevented from being transmitting again until user returns to the vehicle to disarm the system and/or turn on the ignition so that the unit sees a voltage above 13 volts indicating the vehicle has started using the owner's ignition key. This aspect is further understood with reference to the enclosed flowchart labeled "Alert B" (FIG. **5**).

Yet another feature of the invention relates to a low vehicle battery alert. For example, the unit may monitor the battery voltage over a predetermined time such as ten minutes. The ten minute window prevents false tripping, for example, when the voltage dips during engine cranking. In particular, the voltage can be sensed and determined whether it is greater than zero (eg. greater than six volts)and less than a high value (eg. eleven or twelve volts), and, if so, a low battery voltage transmission can be communicated to the monitoring station, and ultimately to the vehicle user when away from the vehicle. If vehicle is being serviced and battery is disconnected this will cause the battery voltage to be equal to zero, then the low battery voltage transmission will not be communicated to the monitoring station. Also to prevent additional alerts, this message is prevented from being transmitting again until user returns to the vehicle to disarm the system and/or turn on the ignition so that the unit sees a voltage above 13 volts indicating the vehicle has started using the owner's ignition key. Again false triggerings are reduced. This aspect is further understood with reference to the enclosed flowchart labeled "Alert E".

Yet another advantageous feature of some embodiments of invention relates to the ability to conserve electrical power. More particularly, when the vehicle is stopped and in the armed mode, the GPS receiver may be periodically operated to determine the vehicle position. If the vehicle position changes, this is indicative that the vehicle is being moved or stolen. For example, the GPS receiver may be operated to generate new vehicle position information every 29 seconds. These relatively quick successive position determinations or readings are generally termed hot start. These are relatively less complicated that a cold start position determination which takes longer, since the cold start posi-

tion determination requires greater time to acquire and receive data from multiple satellites, as will be appreciated by those skilled in the art.

Unfortunately, this relatively high repeated usage of the GPS receiver may cause unnecessary battery drain, especially when the vehicle is left armed and unattended by the user for an extended period. Accordingly, the power conserving feature of the invention permits the GPS receiver to be turned off when the vehicle is in the armed mode, and the GPS receiver is turned on only when needed. For example, a vehicle sensor, such as a shock sensor, motion sensor, ignition sensor, door sensor, or other sensor, or combinations thereof could be used to start the GPS receiver. This sensor could also be used to trigger an alarm if desired; however it need not be so used in all embodiments. The GPS receiver, once turned on, could operate in the normal periodic fashion as described above, or for a fixed period of time. The GPS receiver could also be turned off again after some predetermined time if no further sensor signal is received, or if the position fails to change on subsequent position readings or determinations.

Yet another feature relates to permitting more colorful audible alert messages to be generated for the user. The user can, in some embodiments, access an internet site to type or enter the text for a message to be sent, such as to alert the user that his vehicle is being stolen. The audible message then communicated by a telephone call to the user is generated by a speech message synthesizer based upon the entered text. In accordance with this aspect of the invention, the user could type in phonetically spelled words or phrases, such as to create more colorful messages including slang terms, various accents, and/or to mimic various dialects, for example. The speech synthesizer would then generate the desired message customized for the user. Of course, the system could also permit the user to test or preview the pronunciation generated by the speech message synthesizer based on the entered text message prior to its adoption.

Another aspect relates to requesting GPS position information from a vehicle. If a command is sent downstream to the vehicle requesting that GPS information in turn be sent upstream from the vehicle, and the GPS information is not received within a predetermined time, such as about four minutes, then another command may be sent to the vehicle requesting the GPS information. This may keep repeating until GPS information is received, for a predetermined number of tries, or until a user instructs stopping of the requests. This helps to ensure and confirm the activation and reception of GPS tracking coordinates from the vehicle.

Yet another aspect relates to reducing a frequency with which GPS information is sent from the vehicle. More particularly, the unit may be configured to activate GPS information transmission upstream every 2 minutes. To reduce system usage expense and power consumption at the vehicle, this rate of transmission of GPS information could be progressively decreased over time. For example, in one embodiment, upon activation the GPS location signals could be sent every 2 minutes during the first hour, then once an hour for the next 23 hours, after which only one signal would be sent per day.

Still another aspect relates to warning the user of an inoperable or malfunctioning GPS or cellular telephone section. More particularly, if the GPS or cellular telephone antenna wire is cut or the mounting position of either is changed causing the antenna to stop receiving the signal the user would not ordinarily know of this problem quickly. In accordance with one embodiment, if the ignition is turned on a predetermined number of times, such as about three, and each time ignition turns on if no GPS or no cell signal is received for a minimum time, such as about 15 to 30 minutes or longer, an audible warning beeper may be activated in the vehicle. This beeper may be sounded once ever 15-minutes. At anytime if the GPS or cell signal is received properly then the system re-sets automatically stopping the beeper sound.

As an example, if the ignition key is turned on and no GPS or no Cell signal is being received for 15-minutes, and the vehicle ignition stays on for 45 minutes and there is still no GPS or no cell signal, the unit counts one. Thereafter, if the ignition key is turned on and no GPS or no cell signal is being received for 15-minutes, and the vehicle ignition stays on for 60-minutes and there is still no GPS or no cell signal, a second count is determined. Thereafter, if the ignition is turned on and no GPS or no cell signal is received for 10-minutes, and the vehicle ignition stays on for only 10-minutes and there is still no GPS or no cell signal, no count is determined. Thereafter, if the ignition is turned on and no GPS or no cell signal is being received for 15-minutes, a third count is determined and the beeper is activated as described above. This beeping may continue every 15-minutes while the vehicle ignition stays on as long as the vehicle ignition stays on for 16-minutes and still no GPS or no Cell signal is being received. If thereafter, the ignition is turned on and no GPS or no cell signal is being received, the beeper beeps once and again beeps once every 15-minutes while vehicle ignition stays on. If in 10-minutes both GPS or cell signal is being received, the beeper system is turned off and the warning count is reset.

In examples, if the ignition key is turned on and no GPS or no cell signal is being received for only 5, 10 or 12 minutes (with the threshold set at 15 minutes), then no count is determined.

In certain circumstances, the GPS signal may fail, but the cell signal may still be working. Accordingly, it may be desirable to send an indication of the failure of the GPS signal to the central monitoring station to thereby alert the user as described above. If the cell signal also failed, or if the cell signal failed by itself, in other embodiments a separate paging device would transmit the failure or loss of the cell signal information to the central monitoring station, to thereby alert the user.

Yet another feature is directed to efficient use of a relatively small number of codes available to communicate with the tracking unit from the cellular network and central station. More particularly, a typical arrangement may provide eight basic codes and two "wildcard" codes. The two wildcard codes are reserved for future or other uses. A particular tracking device will respond directly to any of the eight basic codes. For example, the doors could be locked or unlocked, a present location downloaded from the vehicle, etc.

In accordance with this feature, the tracking device may respond differently to the same code or command depending upon the state or condition of the tracking device. For example, if an alarm is triggered at the vehicle, it may be desired that the tracking device continue to send the alarm signal until confirmation is received that the central monitoring station has received the alarm signal. This confirmation can be sent using the same code as may provide another function if the device were not indicating an alarm. Any of a number of such tracking device conditions may trigger a different message to be interpreted from the received code. For example, if any of the above Alerts A–E were triggered, the receipt of a predetermined code, such as code eight, would confirm receipt of the alert by the central station, and this receipt of code eight would not cause the other response

(no alarm triggered) in the tracking device. Of course this concept can be extended to other features as will be appreciated by those skilled in the art.

In accordance with another feature, the rate of sending the location or position data (or change in position data) from the vehicle may be varied to reduce system usage and thereby reduce expenses. More particularly, in one embodiment, the rate of sending may be based upon how long the vehicle has remained stationary. This time period may be selected by the user. For example, the selected time may be in the range of 15 minutes to six hours. If the vehicle has been stationary for the selected time period, then the rate of transmission may be reduced. This reduces or eliminates the need to send home position data and send all the over 15-minute stops made that day. Otherwise, that is when the vehicle is moving, the device may send data at a faster rate. Of course, a system user would not likely be interested in quick updates, especially where the position information is not changing. Conversely, if the vehicle is being moved, it may be desirable to receive more frequent position updates.

Another variation of this transmission rate conservation feature, bases the rate of transmission on the vehicle position. For example, a reduced rate of transmission may be selected if the vehicle is in a predetermined area where the user has a lesser interest in quickly updated position information. The user may also have a reduced interest in an area that can be defined outside of a predetermined distance from a reference point.

Yet another variation of the vehicle position transmission rate conservation feature is based upon the vehicle's speed, such as the vehicle's average or maximum speed, for example. Accordingly, if the vehicle is traveling above a preset speed, the rate of transmission may be increased.

In accordance with another aspect of the invention, the tracking device may send the alert indication a predetermined number of times without receiving an acknowledgment as described above, and then wait until the vehicle position has changed before trying again or the cell re-registers or its RSS. (received signal strength) changes. Thus, power is conserved. When the vehicle has moved to a new position, any obstructions may no longer be present thereby increasing the likelihood of a successful communication. In addition, the change in position may be determined when the vehicle is sensed to be moving about a predetermined relatively small speed, such as greater than 1 mph, for example.

In all of the embodiments and variations described herein, the tracking device may communicate with one or more other vehicle devices via a vehicle data communications bus. Further aspects of interfacing with a vehicle data communications bus are described in U.S. Pat. Nos. 5,719,551 and 6,011,460 assigned to the assignee of the present invention.

Yet another aspect relates to efficient use of available codes on the cellular telephone control channel. In one particular example, ten codes may be available to be transmitted from the monitoring station to the vehicle trackers. The first eight or nine codes are command codes that will cause a specific action by the tracking device at the vehicle. The other one or two codes may be wildcard codes as mentioned above, that may set a stand-by mode for one or a group of vehicles, for example.

It may be desirable to provide more than eight commands at the vehicle responsive to the corresponding eight available codes. For example, it may be desirable to set a feature on or off, or to set a different feature setting or threshold. In accordance with this aspect of the invention, the commands at the tracker are determined based upon a series of different command codes being received within a predetermined time window.

For example, the monitoring station may send code **9** that switches the tracker in the car into a stand-by mode for a predetermined time and which causes the tracker to respond with an upstream confirmation code **7** or **9** indicating receiving code **9**. During the predetermined time of the stand-by mode another code follows that causes a system programmable feature or setting to change. Note that the second code would otherwise cause a different function at the vehicle. Note that system might operate a function **9** if another code **1**–**9** is not received in the predetermined time. The following list is exemplary for features resulting from second codes **1**–**9**:

(1) Code **1**—Tracker will turn off feature of upstream code caused by vehicle alert being detected.

(2) Code **2**—Tracker will turn on feature of upstream code caused by vehicle alert being detected.

(3) Code **3**—Tracker deactivates cell receiver from operating due to a non-paying customer for monitoring service. That phone number can then be allocated to another customer.

(4) Code **4**—Turn on audio buzzer feature that will sound once each 10 minutes. The monitoring station need only send the command to activate the feature, as the tracker will time the period and drive the buzzer thereafter. The monitoring station will normally not need to send this command because the tracker will be configured out of the box with this feature activated to sound the buzzer every 10 minutes until the next command is received.

(5) Code **5**—Turn off the audio buzzer. This is to be sent by the monitoring station after a user has successfully activated his account.

(6) Code **6**—Turn on the 80 mph speed limit reporting. This will normally not be sent as this feature will be the default setting of the tracker.

(7) Code **7**—Turn off the 80 mph speed limit reporting.

(8) Code **8**—Increase speed limit 5 mph and increase the time 5 minutes.

(9) Code **9**—Decrease speed limit 5 mph and decrease the time 5 minutes, and wait 5 minutes if another code number follows. It could operate this way to allow another set of codes to change more features.

In this example, in response to the tracker receiving the system code **1**–**9**, the tracker sends an upstream code **7** to acknowledge receipt of the system code **1**–**9**. Upon receipt of code **9** the tracker waits up to 5 minutes to determine if another system code is received. If no code is received, then the tracker performs the code **9** operation. Of course, in other embodiments other features or settings can be selected.

In general, it may be preferred that the first code sent in a series of two codes, for example, be a code that causes only a minor function to be performed at the vehicle. This so because if the second code is sent from the monitoring station, but not received at the tracker, only a minor function is performed. For example, the first code may switch between armed and disarmed modes. This is in contrast to using a remote engine starting code or engine shutdown code as the first code. The vehicle may be moving or positioned in a marginal reception area, and the second command may not be received by the tracker within the predetermined time window. As will be appreciated by those skilled in the art, this concept of multiple digit codes, can be extended beyond two digits to three or more.

To further conserve cellular transmissions and as described above, the tracker may be set to record a position

based upon a determined event. Only this recorded position information may be downloaded either by user request or at set times. It is desired that such events be relatively few, but that the information still be helpful to the user.

For example, an event for recording of position may be determined based upon the vehicle being stopped for greater than a first time and less than a second time. For example, the first time may be 15 minutes and the second time may be 6 hours. Determination of the vehicle being stopped can be made based upon one or both of the GPS position or the vehicle ignition being turned off. The second time prevents the recording of position information when the vehicle is stopped at the owner's home during the evening, for example. Accordingly, the important information of the vehicle stops being made is recorded and made available to the user, while system communications resources are conserved.

In another example, if the mode is selected to send the vehicles location every 10 min and the vehicle is in the same location for greater than a set time, then no more vehicle locations are sent until the vehicle location has changed to start the every 10 min reporting again.

Other features relating to vehicle control systems are disclosed in copending patent applications entitled VEHICLE TRACKER INCLUDING STATIONARY TIME DETERMINATION AND ASSOCIATED METHODS, Ser. No. 09/859727, VEHICLE TRACKER CONSERVING CODES AND RELATED METHODS, Ser. No. 09/859673; VEHICLE TRACKER WITH POWER SAVING FEATURES AND RELATED METHODS, Ser. No. 09/859728; VEHICLE TRACKER COOPERATING WITH A STARTER INTERRUPT AND RELATED METHODS, Ser. No. 09/859973; VEHICLE TRACKER WITH USER NOTIFICATIONS AND ASSOCIATED METHODS, Ser. No. 09/859733; VEHICLE TRACKER WITH USER REGISTRATION REMINDER AND RELATED METHODS, Ser. No. 09/859971; VEHICLE TRACKER INCLUDING INPUT/OUTPUT FEATURES AND RELATED METHODS, Ser. No. 09/859972; and VEHICLE TRACKER WITH TEST FEATURES AND RELATED METHODS, Ser. No. 09/859729, the entire disclosures of which are incorporated herein by reference.

Many modifications and other embodiments of the invention will come to the mind of one skilled in the art having the benefit of the teachings presented in the foregoing descriptions and the associated drawings. Accordingly, it is understood that the invention is not to be limited to the embodiments disclosed, and that other modifications and embodiments are intended to be included within the spirit and scope of the appended claims.

That which is claimed is:

1. A vehicle tracking system comprising a vehicle tracking unit for a vehicle of a type comprising a vehicle alarm indicator, said vehicle tracking unit comprising

a vehicle position determining device,

a wireless communications device, and

a controller connected to said wireless communications device and said vehicle position determining device;

said controller cooperating with said wireless communications device to send an alarm indication alert based upon at least one of an activation of the vehicle alarm indicator continuously for greater than a predetermined time and an activation of the vehicle alarm indicator in a repetitive pattern; and

a monitoring station receiving the alarm indication alert from said vehicle tracking unit.

2. A vehicle tracking system according to claim **1** wherein said controller also cooperates with said vehicle position determining device and said wireless communications device to send vehicle position messages.

3. A vehicle tracking system according to claim **1** wherein said controller monitors drive signals to the vehicle alarm indicator.

4. A vehicle tracking system according to claim **1** wherein the drive signals have at least one of a first and second polarity.

5. A vehicle tracking system according to claim **1** wherein the vehicle alarm indicator comprises at least one of a vehicle horn, and a vehicle siren.

6. A vehicle tracking system according to claim **1** wherein said vehicle position determining device comprises a Global Positioning System (GPS) device.

7. A vehicle tracking system according to claim **1** wherein said wireless communications device comprises a cellular telephone communications device.

8. A vehicle tracking system according to claim **7** wherein said cellular telephone communications device communicates over a cellular control channel.

9. A vehicle tracking system according to claim **1** wherein said monitoring station comprises a user interface for accepting at least one command from a user and sending at least one alert to the user.

10. A vehicle tracking system according to claim **9** wherein said user interface comprises an Internet interface.

11. A vehicle tracking system according to claim **9** wherein said user interface comprises a telephone network interface.

12. A vehicle tracking unit for use with a vehicle comprising a vehicle alarm indicator, the vehicle tracking unit comprising:

a vehicle position determining device;

a wireless communications device; and

a controller connected to said wireless communications device and said vehicle position determining device;

said controller cooperating with said wireless communications device to send an alarm indication alert responsive to an activation of the vehicle alarm indicator continuously for greater than a predetermined time.

13. A vehicle tracking unit according to claim **12** wherein said controller further sends an alarm indication alert responsive to activation of the vehicle alarm indicator in a repetitive pattern.

14. A vehicle tracking unit according to claim **12** wherein said controller monitors drive signals to the vehicle alarm indicator.

15. A vehicle tracking unit according to claim **14** wherein the drive signals have at least one of a first and second polarity.

16. A vehicle tracking unit according to claim **12** wherein the vehicle alarm indicator comprises at least one of a vehicle horn, and a vehicle siren.

17. A vehicle tracking unit according to claim **12** wherein said vehicle position determining device comprises a Global Positioning System (GPS) device.

18. A vehicle tracking unit according to claim **12** wherein said wireless communications device comprises a cellular telephone communications device.

19. A vehicle tracking unit according to claim **18** wherein said cellular telephone communications device communicates over a cellular control channel.

20. A vehicle tracking unit for use with a vehicle comprising a vehicle alarm indicator, the vehicle tracking unit comprising:

a vehicle position determining device;

a wireless communications device; and

a controller connected to said wireless communications device and said vehicle position determining device;

said controller cooperating with said wireless communications device to send an alarm indication alert responsive to an activation of the vehicle alarm indicator in a repetitive pattern.

21. A vehicle tracking unit according to claim **20** wherein said controller monitors drive signals to the vehicle alarm indicator.

22. A vehicle tracking unit according to claim **21** wherein the drive signals have at least one of a first and second polarity.

23. A vehicle tracking unit according to claim **20** wherein the vehicle alarm indicator comprises at least one of a vehicle horn, and a vehicle siren.

24. A vehicle tracking unit according to claim **20** wherein said vehicle position determining device comprises a Global Positioning System (GPS) device.

25. A vehicle tracking unit according to claim **20** wherein said wireless communications device comprises a cellular telephone communications device.

26. A vehicle tracking unit according to claim **25** wherein said cellular telephone communications device communicates over a cellular control channel.

27. A method for operating a vehicle tracking unit for a vehicle of a type comprising a vehicle alarm indicator, the vehicle tracking unit comprising a vehicle position determining device, and a wireless communications device, the method comprising:

determining position information of the vehicle using the vehicle position determining device;

determining an alarm condition based upon at least one of an activation of the vehicle alarm indicator continuously for greater than a predetermined time and an activation of the vehicle alarm indicator in a repetitive pattern; and

sending an alarm indication alert from the wireless communications device responsive to determining the alarm condition and including vehicle position information.

28. A method according to claim **27** wherein determining the alarm condition comprises monitoring drive signals to the vehicle alarm indicator.

29. A method according to claim **28** wherein the drive signals have at least one of a first and second polarity.

30. A method according to claim **27** wherein the vehicle includes a vehicle battery; and wherein determining the alarm condition comprises monitoring voltage dips of the vehicle battery.

31. A method according to claim **27** wherein the vehicle alarm indicator comprises at least one of a vehicle horn, and a vehicle siren.

32. A method according to claim **27** wherein the vehicle position determining device comprises a Global Positioning System (GPS) device.

33. A method according to claim **27** wherein the wireless communications device comprises a cellular telephone communications device.

34. A method according to claim **33** wherein the cellular telephone communications device communicates over a cellular control channel.

* * * * *

UNITED STATES PATENT AND TRADEMARK OFFICE

CERTIFICATE OF CORRECTION

PATENT NO. : 7,149,623 B2
APPLICATION NO. : 10/383496
DATED : December 12, 2006
INVENTOR(S) : Flick

It is certified that error appears in the above-identified patent and that said Letters Patent is hereby corrected as shown below:

Column 1, Line 40	Delete: "it used" Insert: --it is used--
Column 3, Line 40	Delete: "diagrams" Insert: --diagram--
Column 4, Line 42	Delete: "illustrated" Insert: --illustratively--
Column 5, Line 35	Delete: "will described" Insert: --will be described--
Column 6, Line 66	Delete: "of an vehicle" Insert: --of a vehicle--
Column 7, Line 28	Delete: "not operation" Insert: --not in operation--
Column 7, Line 65	Delete: "cause" Insert: --causes--

Signed and Sealed this

Seventh Day of August, 2007

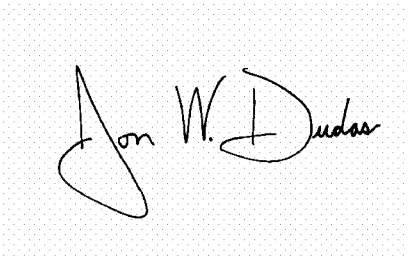

JON W. DUDAS
Director of the United States Patent and Trademark Office