AO 120 (Rev. 08/10)

TO: Mail Stop 8 Director of the U.S. Patent and Trademark Office P.O. Box 1450 Alexandria, VA 22313-1450	REPORT ON THE FILING OR DETERMINATION OF AN ACTION REGARDING A PATENT OR TRADEMARK

In Compliance with 35 U.S.C. § 290 and/or 15 U.S.C. § 1116 you are hereby advised that a court action has been filed in the U.S. District Court Westen District of Wisconsin on the following

☐ Trademarks or ☑ Patents. (☐ the patent action involves 35 U.S.C. § 292.):

DOCKET NO.	DATE FILED	U.S. DISTRICT COURT
3:22-cv-606	10/20/2022	Westen District of Wisconsin

PLAINTIFF	DEFENDANT
Johnson Health Tech Co., Ltd and Johnson Health Tech North America, Inc.	Peloton Interactive, Inc.

	PATENT OR TRADEMARK NO.	DATE OF PATENT OR TRADEMARK	HOLDER OF PATENT OR TRADEMARK
1	10,032,227	7/24/2018	Johnson Health Tech Co., Ltd
2	10,796,375	10/6/2020	Johnson Health Tech Co., Ltd
3	11,227,340	1/8/2022	Johnson Health Tech Co., Ltd
4			
5			

In the above---entitled case, the following patent(s)/ trademark(s) have been included:

DATE INCLUDED	INCLUDED BY ☐ Amendment ☐ Answer ☐ Cross Bill ☐ Other Pleading	
PATENT OR TRADEMARK NO.	DATE OF PATENT OR TRADEMARK	HOLDER OF PATENT OR TRADEMARK
1		
2		
3		
4		
5		

In the above---entitled case, the following decision has been rendered or judgement issued:

DECISION/JUDGEMENT

CLERK	(BY) DEPUTY CLERK	DATE
Joel Turner, Clerk of Court	s/L. Kamke, Deputy Clerk	10/21/22

Copy 1---Upon initiation of action, mail this copy to Director Copy 3---Upon termination of action, mail this copy to Director
Copy 2---Upon filing document adding patent(s), mail this copy to Director Copy 4---Case file copy

UNITED STATES PATENT AND TRADEMARK OFFICE

UNITED STATES DEPARTMENT OF COMMERCE
United States Patent and Trademark Office
Address: COMMISSIONER FOR PATENTS
P.O. Box 1450
Alexandria, Virginia 22313-1450
www.uspto.gov

APPLICATION NO.	ISSUE DATE	PATENT NO.	ATTORNEY DOCKET NO.	CONFIRMATION NO.
16/043,925	10/06/2020	10796375	011640-9081-US02	6126

23409 7590 09/16/2020
MICHAEL BEST & FRIEDRICH LLP (Mke)
790 N WATER ST
SUITE 2500
MILWAUKEE, WI 53202

ISSUE NOTIFICATION

The projected patent number and issue date are specified above.

Determination of Patent Term Adjustment under 35 U.S.C. 154 (b)
(application filed on or after May 29, 2000)

The Patent Term Adjustment is 108 day(s). Any patent to issue from the above-identified application will include an indication of the adjustment on the front page.

If a Continued Prosecution Application (CPA) was filed in the above-identified application, the filing date that determines Patent Term Adjustment is the filing date of the most recent CPA.

Applicant will be able to obtain more detailed information by accessing the Patent Application Information Retrieval (PAIR) WEB site (http://pair.uspto.gov).

Any questions regarding the Patent Term Extension or Adjustment determination should be directed to the Office of Patent Legal Administration at (571)-272-7702. Questions relating to issue and publication fee payments should be directed to the Application Assistance Unit (AAU) of the Office of Data Management (ODM) at (571)-272-4200.

APPLICANT(s) (Please see PAIR WEB site http://pair.uspto.gov for additional applicants):

Nathan Pyles, Lake Mills, WI;
JOHNSON HEALTH TECH CO., LTD, Daya District, TAIWAN;

The United States represents the largest, most dynamic marketplace in the world and is an unparalleled location for business investment, innovation, and commercialization of new technologies. The USA offers tremendous resources and advantages for those who invest and manufacture goods here. Through SelectUSA, our nation works to encourage and facilitate business investment. To learn more about why the USA is the best country in the world to develop technology, manufacture products, and grow your business, visit SelectUSA.gov.

IR103 (Rev. 10/09)

Document Description: Issue Fee Payment (PTO-85B)

Issue Fee Transmittal Form

Application Number	Filing Date	First Named Inventor	Atty. Docket No.	Confirmation No.
16043925	24-Jul-2018	Nathan Pyles	011640-9081-US02	6126

TITLE OF INVENTION :

EXERCISE APPARATUS WITH EXERCISE USE VERIFICATION FUNCTION AND VERIFYING METHOD

Entity Status	Application Type	Art Unit	Class - Subclass	EXAMINER
Regular Undiscounted	Utility under 35 USC 111(a)	3784	008000	SUNDHARA GANESAN

Issue Fee Due	Publication Due	Total Fee(s) Due	Date Due	Prev. Paid Fee
$1000	$0	$1000	01-Sep-2020	$0

1.Change of Correspondence Address and/or Indication Of Fee Address (37 CFR 1.33 & 1.363)

Current Correspondence Address:	Current Indicated Fee Address :
23409 MICHAEL BEST & FRIEDRICH LLP (Mke) 790 N WATER ST SUITE 2500 MILWAUKEE WI 53202 UNITED STATES 4142716560 mkeipdocket@michaelbest.com	
☐ Change of correspondence address requested, system generated AIA/122-EFS form attached	☐ Fee Address indication requested, system generated SB/47-EFS form attached

2.Entity Status

Change in Entity Status

○ Applicant certifying micro entity status; system generated Micro Entity certification form attached. See 37 CFR 1.29.
Note: Absent a valid certification of micro entity status, issue fee payment in the micro entity amount will not be accepted at the risk of application abandonment. If this box is checked, you will be prompted to choose a micro entity status on the gross income basis (37 CFR 1.29(a)) or the institution of higher education basis (37 CFR 1.29(d)), and make the applicable certification online.

○ Applicant asserting small entity status. See 37 CFR 1.27.
Note: If the application was previously under micro entity status, checking this box will be taken to be a notification of loss of entitlement to micro entity status.

◉ Applicant changing to regular undiscounted fee status.
Note: Checking this box will be taken to be a notification of loss of entitlement to small or micro entity status, as applicable.

Document Description: Issue Fee Payment (PTO-85B)

3.The Following Fee(s) Are Submitted:

☒ Issue Fee

☐ I authorize USPTO to apply my previously paid issue fee to the current fees due

☐ Publication Fee

☐ The Director is hereby authorized to apply my previously paid issue fee to the current fee due and to charge deficient fees to Deposit Account Number _____

☐ Advance Order - # of copies _____

☒ If **in addition to** the payment of the issue fee amount submitted with this form, there are any discrepancies in any amount(s) due, the Director is authorized to charge any deficiency, or credit any overpayment, to Deposit Account Number 133080 . The **issue fee must be submitted** with this form. **If payment of the issue fee does not accompany this form, checking this box and providing a deposit account number will NOT be effective to satisfy full payment of the fee(s) due.**

4.Firm and/or Attorney Names To Be Printed

NOTE: If no name is listed, no name will be printed
For printing on the patent front page, list to be displayed as entered

1. MICHAEL BEST & FRIEDRICH LLP
2.
3.

5.Assignee Name(s) and Residence Data To Be Printed

PLEASE NOTE: Unless an assignee is identified below, no assignee data will appear on the patent. If an assignee is identified below, the document has been filed for recordation as set forth in 37 CFR 3.11. Completion of this form is NOT a substitute for filing an assignment.

Name	City	State	Country	Category
JOHNSON HEALTH TECH CO., LTD	TAICHUNG CITY		taiwan	corporation

6.Signature

I certify, in accordance with 37 CFR 1.4(d)(4) that I am an attorney or agent registered to practice before the Patent and Trademark Office who has filed and has been granted power of attorney in this application. I also certify that this Fee(s) Transmittal form is being transmitted to the USPTO via EFS-WEB on the date indicated below.

Signature	/Matthew D. Brown/	**Date**	08-31-2020
Name	Matthew D. Brown	**Registration Number**	75032

WEB IFEE 1.0

Electronic Patent Application Fee Transmittal

Application Number:	16043925
Filing Date:	24-Jul-2018
Title of Invention:	EXERCISE APPARATUS WITH EXERCISE USE VERIFICATION FUNCTION AND VERIFYING METHOD
First Named Inventor/Applicant Name:	Nathan Pyles
Filer:	Matthew D. Brown/Tanya Parent
Attorney Docket Number:	011640-9081-US02

Filed as Large Entity

Filing Fees for Utility under 35 USC 111(a)

Description	Fee Code	Quantity	Amount	Sub-Total in USD($)
Basic Filing:				
UTILITY APPL ISSUE FEE	1501	1	1000	1000
PUBL. FEE- EARLY, VOLUNTARY, OR NORMAL	1504	1	0	0
Pages:				
Claims:				
Miscellaneous-Filing:				
Petition:				
Patent-Appeals-and-Interference:				

Description	Fee Code	Quantity	Amount	Sub-Total in USD($)
Post-Allowance-and-Post-Issuance:				
Extension-of-Time:				
Miscellaneous:				
		Total in USD ($)		**1000**

Electronic Acknowledgement Receipt	
EFS ID:	40429667
Application Number:	16043925
International Application Number:	
Confirmation Number:	6126
Title of Invention:	EXERCISE APPARATUS WITH EXERCISE USE VERIFICATION FUNCTION AND VERIFYING METHOD
First Named Inventor/Applicant Name:	Nathan Pyles
Customer Number:	23409
Filer:	Matthew D. Brown/Tanya Parent
Filer Authorized By:	Matthew D. Brown
Attorney Docket Number:	011640-9081-US02
Receipt Date:	31-AUG-2020
Filing Date:	24-JUL-2018
Time Stamp:	17:37:53
Application Type:	Utility under 35 USC 111(a)

Payment information:

Submitted with Payment	yes
Payment Type	CARD
Payment was successfully received in RAM	$1000
RAM confirmation Number	E20208UH37515412
Deposit Account	
Authorized User	
The Director of the USPTO is hereby authorized to charge indicated fees and credit any overpayment as follows:	

File Listing:

Document Number	Document Description	File Name	File Size(Bytes)/ Message Digest	Multi Part /.zip	Pages (if appl.)
1	Issue Fee Payment (PTO-85B)	Web85b.pdf	46290 0ef9de47064d3ae03d99337e41b2fd711f2a8495	no	2
Warnings:					
Information:					
2	Fee Worksheet (SB06)	fee-info.pdf	32130 5c7fa9546cbab89bac3126de6bdda5ad68796e2f	no	2
Warnings:					
Information:					
		Total Files Size (in bytes):	78420		

This Acknowledgement Receipt evidences receipt on the noted date by the USPTO of the indicated documents, characterized by the applicant, and including page counts, where applicable. It serves as evidence of receipt similar to a Post Card, as described in MPEP 503.

<u>New Applications Under 35 U.S.C. 111</u>
If a new application is being filed and the application includes the necessary components for a filing date (see 37 CFR 1.53(b)-(d) and MPEP 506), a Filing Receipt (37 CFR 1.54) will be issued in due course and the date shown on this Acknowledgement Receipt will establish the filing date of the application.
<u>National Stage of an International Application under 35 U.S.C. 371</u>
If a timely submission to enter the national stage of an international application is compliant with the conditions of 35 U.S.C. 371 and other applicable requirements a Form PCT/DO/EO/903 indicating acceptance of the application as a national stage submission under 35 U.S.C. 371 will be issued in addition to the Filing Receipt, in due course.
<u>New International Application Filed with the USPTO as a Receiving Office</u>
If a new international application is being filed and the international application includes the necessary components for an international filing date (see PCT Article 11 and MPEP 1810), a Notification of the International Application Number and of the International Filing Date (Form PCT/RO/105) will be issued in due course, subject to prescriptions concerning national security, and the date shown on this Acknowledgement Receipt will establish the international filing date of the application.

UNITED STATES PATENT AND TRADEMARK OFFICE

UNITED STATES DEPARTMENT OF COMMERCE
United States Patent and Trademark Office
Address: COMMISSIONER FOR PATENTS
P.O. Box 1450
Alexandria, Virginia 22313-1450
www.uspto.gov

NOTICE OF ALLOWANCE AND FEE(S) DUE

23409 7590 06/01/2020
MICHAEL BEST & FRIEDRICH LLP (Mke)
790 N WATER ST
SUITE 2500
MILWAUKEE, WI 53202

EXAMINER
GANESAN, SUNDHARA M

ART UNIT	PAPER NUMBER
3784	

DATE MAILED: 06/01/2020

APPLICATION NO.	FILING DATE	FIRST NAMED INVENTOR	ATTORNEY DOCKET NO.	CONFIRMATION NO.
16/043,925	07/24/2018	Nathan Pyles	011640-9081-US02	6126

TITLE OF INVENTION: EXERCISE APPARATUS WITH EXERCISE USE VERIFICATION FUNCTION AND VERIFYING METHOD

APPLN. TYPE	ENTITY STATUS	ISSUE FEE DUE	PUBLICATION FEE DUE	PREV. PAID ISSUE FEE	TOTAL FEE(S) DUE	DATE DUE
nonprovisional	UNDISCOUNTED	$1000	$0.00	$0.00	$1000	09/01/2020

THE APPLICATION IDENTIFIED ABOVE HAS BEEN EXAMINED AND IS ALLOWED FOR ISSUANCE AS A PATENT. PROSECUTION ON THE MERITS IS CLOSED. THIS NOTICE OF ALLOWANCE IS NOT A GRANT OF PATENT RIGHTS. THIS APPLICATION IS SUBJECT TO WITHDRAWAL FROM ISSUE AT THE INITIATIVE OF THE OFFICE OR UPON PETITION BY THE APPLICANT. SEE 37 CFR 1.313 AND MPEP 1308.

THE ISSUE FEE AND PUBLICATION FEE (IF REQUIRED) MUST BE PAID WITHIN THREE MONTHS FROM THE MAILING DATE OF THIS NOTICE OR THIS APPLICATION SHALL BE REGARDED AS ABANDONED. THIS STATUTORY PERIOD CANNOT BE EXTENDED. SEE 35 U.S.C. 151. THE ISSUE FEE DUE INDICATED ABOVE DOES NOT REFLECT A CREDIT FOR ANY PREVIOUSLY PAID ISSUE FEE IN THIS APPLICATION. IF AN ISSUE FEE HAS PREVIOUSLY BEEN PAID IN THIS APPLICATION (AS SHOWN ABOVE), THE RETURN OF PART B OF THIS FORM WILL BE CONSIDERED A REQUEST TO REAPPLY THE PREVIOUSLY PAID ISSUE FEE TOWARD THE ISSUE FEE NOW DUE.

HOW TO REPLY TO THIS NOTICE:

I. Review the ENTITY STATUS shown above. If the ENTITY STATUS is shown as SMALL or MICRO, verify whether entitlement to that entity status still applies.

If the ENTITY STATUS is the same as shown above, pay the TOTAL FEE(S) DUE shown above.

If the ENTITY STATUS is changed from that shown above, on PART B - FEE(S) TRANSMITTAL, complete section number 5 titled "Change in Entity Status (from status indicated above)".

For purposes of this notice, small entity fees are 1/2 the amount of undiscounted fees, and micro entity fees are 1/2 the amount of small entity fees.

II. PART B - FEE(S) TRANSMITTAL, or its equivalent, must be completed and returned to the United States Patent and Trademark Office (USPTO) with your ISSUE FEE and PUBLICATION FEE (if required). If you are charging the fee(s) to your deposit account, section "4b" of Part B - Fee(s) Transmittal should be completed and an extra copy of the form should be submitted. If an equivalent of Part B is filed, a request to reapply a previously paid issue fee must be clearly made, and delays in processing may occur due to the difficulty in recognizing the paper as an equivalent of Part B.

III. All communications regarding this application must give the application number. Please direct all communications prior to issuance to Mail Stop ISSUE FEE unless advised to the contrary.

IMPORTANT REMINDER: Maintenance fees are due in utility patents issuing on applications filed on or after Dec. 12, 1980. It is patentee's responsibility to ensure timely payment of maintenance fees when due. More information is available at www.uspto.gov/PatentMaintenanceFees.

PART B - FEE(S) TRANSMITTAL

Complete and send this form, together with applicable fee(s), by mail or fax, or via EFS-Web.

By mail, send to: Mail Stop ISSUE FEE
Commissioner for Patents
P.O. Box 1450
Alexandria, Virginia 22313-1450

By fax, send to: (571)-273-2885

INSTRUCTIONS: This form should be used for transmitting the ISSUE FEE and PUBLICATION FEE (if required). Blocks 1 through 5 should be completed where appropriate. All further correspondence including the Patent, advance orders and notification of maintenance fees will be mailed to the current correspondence address as indicated unless corrected below or directed otherwise in Block 1, by (a) specifying a new correspondence address; and/or (b) indicating a separate "FEE ADDRESS" for maintenance fee notifications.

CURRENT CORRESPONDENCE ADDRESS (Note: Use Block 1 for any change of address)

23409 7590 06/01/2020
MICHAEL BEST & FRIEDRICH LLP (Mke)
790 N WATER ST
SUITE 2500
MILWAUKEE, WI 53202

Note: A certificate of mailing can only be used for domestic mailings of the Fee(s) Transmittal. This certificate cannot be used for any other accompanying papers. Each additional paper, such as an assignment or formal drawing, must have its own certificate of mailing or transmission.

Certificate of Mailing or Transmission

I hereby certify that this Fee(s) Transmittal is being deposited with the United States Postal Service with sufficient postage for first class mail in an envelope addressed to the Mail Stop ISSUE FEE address above, or being transmitted to the USPTO via EFS-Web or by facsimile to (571) 273-2885, on the date below.

(Typed or printed name)
(Signature)
(Date)

APPLICATION NO.	FILING DATE	FIRST NAMED INVENTOR	ATTORNEY DOCKET NO.	CONFIRMATION NO.
16/043,925	07/24/2018	Nathan Pyles	011640-9081-US02	6126

TITLE OF INVENTION: EXERCISE APPARATUS WITH EXERCISE USE VERIFICATION FUNCTION AND VERIFYING METHOD

APPLN. TYPE	ENTITY STATUS	ISSUE FEE DUE	PUBLICATION FEE DUE	PREV. PAID ISSUE FEE	TOTAL FEE(S) DUE	DATE DUE
nonprovisional	UNDISCOUNTED	$1000	$0.00	$0.00	$1000	09/01/2020

EXAMINER	ART UNIT	CLASS-SUBCLASS
GANESAN, SUNDHARA M	3784	482-008000

1. Change of correspondence address or indication of "Fee Address" (37 CFR 1.363).

❑ Change of correspondence address (or Change of Correspondence Address form PTO/SB/122) attached.

❑ "Fee Address" indication (or "Fee Address" Indication form PTO/SB/47; Rev 03-09 or more recent) attached. **Use of a Customer Number is required.**

2. For printing on the patent front page, list
(1) The names of up to 3 registered patent attorneys or agents OR, alternatively,
(2) The name of a single firm (having as a member a registered attorney or agent) and the names of up to 2 registered patent attorneys or agents. If no name is listed, no name will be printed.

1_____
2_____
3_____

3. ASSIGNEE NAME AND RESIDENCE DATA TO BE PRINTED ON THE PATENT (print or type)

PLEASE NOTE: Unless an assignee is identified below, no assignee data will appear on the patent. If an assignee is identified below, the document must have been previously recorded, or filed for recordation, as set forth in 37 CFR 3.11 and 37 CFR 3.81(a). Completion of this form is NOT a substitute for filing an assignment.

(A) NAME OF ASSIGNEE (B) RESIDENCE: (CITY and STATE OR COUNTRY)

Please check the appropriate assignee category or categories (will not be printed on the patent) : ❑ Individual ❑ Corporation or other private group entity ❑ Government

4a. Fees submitted: ❑Issue Fee ❑Publication Fee (if required) ❑Advance Order - # of Copies _____

4b. Method of Payment: *(Please first reapply any previously paid fee shown above)*

❑ Electronic Payment via EFS-Web ❑ Enclosed check ❑ Non-electronic payment by credit card (Attach form PTO-2038)

❑ The Director is hereby authorized to charge the required fee(s), any deficiency, or credit any overpayment to Deposit Account No. _____

5. **Change in Entity Status** (from status indicated above)

❑ Applicant certifying micro entity status. See 37 CFR 1.29

❑ Applicant asserting small entity status. See 37 CFR 1.27

❑ Applicant changing to regular undiscounted fee status.

NOTE: Absent a valid certification of Micro Entity Status (see forms PTO/SB/15A and 15B), issue fee payment in the micro entity amount will not be accepted at the risk of application abandonment.
NOTE: If the application was previously under micro entity status, checking this box will be taken to be a notification of loss of entitlement to micro entity status.
NOTE: Checking this box will be taken to be a notification of loss of entitlement to small or micro entity status, as applicable.

NOTE: This form must be signed in accordance with 37 CFR 1.31 and 1.33. See 37 CFR 1.4 for signature requirements and certifications.

Authorized Signature _____ Date _____

Typed or printed name _____ Registration No. _____

UNITED STATES DEPARTMENT OF COMMERCE
United States Patent and Trademark Office
Address: COMMISSIONER FOR PATENTS
P.O. Box 1450
Alexandria, Virginia 22313-1450
www.uspto.gov

APPLICATION NO.	FILING DATE	FIRST NAMED INVENTOR	ATTORNEY DOCKET NO.	CONFIRMATION NO.
16/043,925	07/24/2018	Nathan Pyles	011640-9081-US02	6126

23409 7590 06/01/2020
MICHAEL BEST & FRIEDRICH LLP (Mke)
790 N WATER ST
SUITE 2500
MILWAUKEE, WI 53202

EXAMINER
GANESAN, SUNDHARA M

ART UNIT	PAPER NUMBER
3784	

DATE MAILED: 06/01/2020

Determination of Patent Term Adjustment under 35 U.S.C. 154 (b)
(Applications filed on or after May 29, 2000)

The Office has discontinued providing a Patent Term Adjustment (PTA) calculation with the Notice of Allowance.

Section 1(h)(2) of the AIA Technical Corrections Act amended 35 U.S.C. 154(b)(3)(B)(i) to eliminate the requirement that the Office provide a patent term adjustment determination with the notice of allowance. See Revisions to Patent Term Adjustment, 78 Fed. Reg. 19416, 19417 (Apr. 1, 2013). Therefore, the Office is no longer providing an initial patent term adjustment determination with the notice of allowance. The Office will continue to provide a patent term adjustment determination with the Issue Notification Letter that is mailed to applicant approximately three weeks prior to the issue date of the patent, and will include the patent term adjustment on the patent. Any request for reconsideration of the patent term adjustment determination (or reinstatement of patent term adjustment) should follow the process outlined in 37 CFR 1.705.

Any questions regarding the Patent Term Extension or Adjustment determination should be directed to the Office of Patent Legal Administration at (571)-272-7702. Questions relating to issue and publication fee payments should be directed to the Customer Service Center of the Office of Patent Publication at 1-(888)-786-0101 or (571)-272-4200.

OMB Clearance and PRA Burden Statement for PTOL-85 Part B

The Paperwork Reduction Act (PRA) of 1995 requires Federal agencies to obtain Office of Management and Budget approval before requesting most types of information from the public. When OMB approves an agency request to collect information from the public, OMB (i) provides a valid OMB Control Number and expiration date for the agency to display on the instrument that will be used to collect the information and (ii) requires the agency to inform the public about the OMB Control Number's legal significance in accordance with 5 CFR 1320.5(b).

The information collected by PTOL-85 Part B is required by 37 CFR 1.311. The information is required to obtain or retain a benefit by the public which is to file (and by the USPTO to process) an application. Confidentiality is governed by 35 U.S.C. 122 and 37 CFR 1.14. This collection is estimated to take 30 minutes to complete, including gathering, preparing, and submitting the completed application form to the USPTO. Time will vary depending upon the individual case. Any comments on the amount of time you require to complete this form and/or suggestions for reducing this burden, should be sent to the Chief Information Officer, U.S. Patent and Trademark Office, U.S. Department of Commerce, P.O. Box 1450, Alexandria, Virginia 22313-1450. DO NOT SEND FEES OR COMPLETED FORMS TO THIS ADDRESS. SEND TO: Commissioner for Patents, P.O. Box 1450, Alexandria, Virginia 22313-1450. Under the Paperwork Reduction Act of 1995, no persons are required to respond to a collection of information unless it displays a valid OMB control number.

Privacy Act Statement

The Privacy Act of 1974 (P.L. 93-579) requires that you be given certain information in connection with your submission of the attached form related to a patent application or patent. Accordingly, pursuant to the requirements of the Act, please be advised that: (1) the general authority for the collection of this information is 35 U.S.C. 2(b)(2); (2) furnishing of the information solicited is voluntary; and (3) the principal purpose for which the information is used by the U.S. Patent and Trademark Office is to process and/or examine your submission related to a patent application or patent. If you do not furnish the requested information, the U.S. Patent and Trademark Office may not be able to process and/or examine your submission, which may result in termination of proceedings or abandonment of the application or expiration of the patent.

The information provided by you in this form will be subject to the following routine uses:

1. The information on this form will be treated confidentially to the extent allowed under the Freedom of Information Act (5 U.S.C. 552) and the Privacy Act (5 U.S.C 552a). Records from this system of records may be disclosed to the Department of Justice to determine whether disclosure of these records is required by the Freedom of Information Act.
2. A record from this system of records may be disclosed, as a routine use, in the course of presenting evidence to a court, magistrate, or administrative tribunal, including disclosures to opposing counsel in the course of settlement negotiations.
3. A record in this system of records may be disclosed, as a routine use, to a Member of Congress submitting a request involving an individual, to whom the record pertains, when the individual has requested assistance from the Member with respect to the subject matter of the record.
4. A record in this system of records may be disclosed, as a routine use, to a contractor of the Agency having need for the information in order to perform a contract. Recipients of information shall be required to comply with the requirements of the Privacy Act of 1974, as amended, pursuant to 5 U.S.C. 552a(m).
5. A record related to an International Application filed under the Patent Cooperation Treaty in this system of records may be disclosed, as a routine use, to the International Bureau of the World Intellectual Property Organization, pursuant to the Patent Cooperation Treaty.
6. A record in this system of records may be disclosed, as a routine use, to another federal agency for purposes of National Security review (35 U.S.C. 181) and for review pursuant to the Atomic Energy Act (42 U.S.C. 218(c)).
7. A record from this system of records may be disclosed, as a routine use, to the Administrator, General Services, or his/her designee, during an inspection of records conducted by GSA as part of that agency's responsibility to recommend improvements in records management practices and programs, under authority of 44 U.S.C. 2904 and 2906. Such disclosure shall be made in accordance with the GSA regulations governing inspection of records for this purpose, and any other relevant (i.e., GSA or Commerce) directive. Such disclosure shall not be used to make determinations about individuals.
8. A record from this system of records may be disclosed, as a routine use, to the public after either publication of the application pursuant to 35 U.S.C. 122(b) or issuance of a patent pursuant to 35 U.S.C. 151. Further, a record may be disclosed, subject to the limitations of 37 CFR 1.14, as a routine use, to the public if the record was filed in an application which became abandoned or in which the proceedings were terminated and which application is referenced by either a published application, an application open to public inspection or an issued patent.
9. A record from this system of records may be disclosed, as a routine use, to a Federal, State, or local law enforcement agency, if the USPTO becomes aware of a violation or potential violation of law or regulation.

Notice of Allowability	Application No. 16/043,925	Applicant(s) Pyles, Nathan	
	Examiner SUNDHARA M GANESAN	Art Unit 3784	AIA (FITF) Status Yes

-- The MAILING DATE of this communication appears on the cover sheet with the correspondence address--

All claims being allowable, PROSECUTION ON THE MERITS IS (OR REMAINS) CLOSED in this application. If not included herewith (or previously mailed), a Notice of Allowance (PTOL-85) or other appropriate communication will be mailed in due course. **THIS NOTICE OF ALLOWABILITY IS NOT A GRANT OF PATENT RIGHTS.** This application is subject to withdrawal from issue at the initiative of the Office or upon petition by the applicant. See 37 CFR 1.313 and MPEP 1308.

1. ☑ This communication is responsive to Amendment filed 2/17/2020.
   ☐ A declaration(s)/affidavit(s) under **37 CFR 1.130(b)** was/were filed on _____.

2. ☐ An election was made by the applicant in response to a restriction requirement set forth during the interview on _____; the restriction requirement and election have been incorporated into this action.

3. ☑ The allowed claim(s) is/are 1-20 . As a result of the allowed claim(s), you may be eligible to benefit from the **Patent Prosecution Highway** program at a participating intellectual property office for the corresponding application. For more information, please see **http://www.uspto.gov/patents/init_events/pph/index.jsp** or send an inquiry to **PPHfeedback@uspto.gov.**

4. ☐ Acknowledgment is made of a claim for foreign priority under 35 U.S.C. § 119(a)-(d) or (f).

   Certified copies:

   a) ☐All b) ☐ Some *c) ☐ None of the:

   1. ☐ Certified copies of the priority documents have been received.
   2. ☐ Certified copies of the priority documents have been received in Application No. _____ .
   3. ☐ Copies of the certified copies of the priority documents have been received in this national stage application from the International Bureau (PCT Rule 17.2(a)).

   * Certified copies not received: _____ .

Applicant has THREE MONTHS FROM THE "MAILING DATE" of this communication to file a reply complying with the requirements noted below. Failure to timely comply will result in ABANDONMENT of this application.
THIS THREE-MONTH PERIOD IS NOT EXTENDABLE.

5. ☐ CORRECTED DRAWINGS (as "replacement sheets") must be submitted.
   ☐ including changes required by the attached Examiner's Amendment / Comment or in the Office action of Paper No./Mail Date _____ .

   Identifying indicia such as the application number (see 37 CFR 1.84(c)) should be written on the drawings in the front (not the back) of each sheet. Replacement sheet(s) should be labeled as such in the header according to 37 CFR 1.121(d).

6. ☐ DEPOSIT OF and/or INFORMATION about the deposit of BIOLOGICAL MATERIAL must be submitted. Note the attached Examiner's comment regarding REQUIREMENT FOR THE DEPOSIT OF BIOLOGICAL MATERIAL.

Attachment(s)

1. ☑ Notice of References Cited (PTO-892)
2. ☐ Information Disclosure Statements (PTO/SB/08), Paper No./Mail Date _____.
3. ☐ Examiner's Comment Regarding Requirement for Deposit of Biological Material _____.
4. ☐ Interview Summary (PTO-413), Paper No./Mail Date. _____.
5. ☐ Examiner's Amendment/Comment
6. ☐ Examiner's Statement of Reasons for Allowance
7. ☐ Other _____.

/SUNDHARA M GANESAN/
Primary Examiner, Art Unit 3784

Notice of References Cited	Application/Control No. 16/043,925	Applicant(s)/Patent Under Reexamination Pyles, Nathan	
	Examiner SUNDHARA M GANESAN	Art Unit 3784	Page 1 of 1

U.S. PATENT DOCUMENTS

*		Document Number Country Code-Number-Kind Code	Date MM-YYYY	Name	CPC Classification	US Classification
*	A	US-20100016678-A1	01-2010	Beck; Kenneth C.	A61B5/4833	600/300
*	B	US-20120040799-A1	02-2012	Jaquish; John Paul	A63B21/4035	482/9
*	C	US-20130143718-A1	06-2013	Pani; Danilo	A63B21/4035	482/8
*	D	US-20130211562-A1	08-2013	Winter; Thomas G.	G16H20/30	700/91
	E					
	F					
	G					
	H					
	I					
	J					
	K					
	L					
	M					

FOREIGN PATENT DOCUMENTS

*		Document Number Country Code-Number-Kind Code	Date MM-YYYY	Country	Name	CPC Classification
	N					
	O					
	P					
	Q					
	R					
	S					
	T					

NON-PATENT DOCUMENTS

*		Include as applicable: Author, Title Date, Publisher, Edition or Volume, Pertinent Pages)
	U	
	V	
	W	
	X	

*A copy of this reference is not being furnished with this Office action. (See MPEP § 707.05(a).)
Dates in MM-YYYY format are publication dates. Classifications may be US or foreign.

Issue Classification	Application/Control No.	Applicant(s)/Patent Under Reexamination
	16/043,925	Pyles, Nathan
	Examiner	**Art Unit**
	SUNDHARA M GANESAN	3784

CPC

Symbol					Type	Version
G06Q	/	40	/	08	F	2013-01-01
A63B	/	22	/	0235	I	2013-01-01
A63B	/	24	/	0087	I	2013-01-01
G06F	/	19	/	3481	I	2013-01-01
A63B	/	24	/	0062	I	2013-01-01
G16H	/	20	/	30	I	2018-01-01
G06F	/	19	/	00	I	2013-01-01
A63B	/	2220	/	20	A	2013-01-01
A63B	/	2220	/	62	A	2013-01-01
A63B	/	2230	/	505	A	2013-01-01
A63B	/	22	/	04	A	2013-01-01
A63B	/	2024	/	0093	A	2013-01-01
A63B	/	2024	/	0096	A	2013-01-01
A63B	/	2220	/	30	A	2013-01-01
A63B	/	2220	/	56	A	2013-01-01
A63B	/	2220	/	805	A	2013-01-01
A63B	/	2225	/	50	A	2013-01-01
A63B	/	22	/	025	A	2015-10-01
A63B	/	2225	/	20	A	2013-01-01
A63B	/	2230	/	50	A	2013-01-01
A63B	/	2220	/	13	A	2013-01-01

CPC Combination Sets

Symbol					Type	Set	Ranking	Version
	/		/					

NONE (Assistant Examiner)	(Date)	**Total Claims Allowed:** 20	
/SUNDHARA M GANESAN/ Primary Examiner, Art Unit 3784 (Primary Examiner)	26 May 2020 (Date)	O.G. Print Claim(s) 1	O.G. Print Figure 4

U.S. Patent and Trademark Office

Part of Paper No.: 20200526

Issue Classification	Application/Control No.	Applicant(s)/Patent Under Reexamination
	16/043,925	Pyles, Nathan
	Examiner	**Art Unit**
	SUNDHARA M GANESAN	3784

INTERNATIONAL CLASSIFICATION				
CLAIMED				
G06Q40/08	/	40	/	08
A63B22/02	/	22	/	02
A63B24/00	/	24	/	00
G06F19/00	/	19	/	00
G16H20/30	/	20	/	30
A63B22/04	/	22	/	04

NON-CLAIMED				
	/		/	

US ORIGINAL CLASSIFICATION	
CLASS	**SUBCLASS**

CROSS REFERENCES(S)						
CLASS	**SUBCLASS (ONE SUBCLASS PER BLOCK)**					

NONE (Assistant Examiner)	(Date)	**Total Claims Allowed:** 20	
/SUNDHARA M GANESAN/ Primary Examiner, Art Unit 3784 (Primary Examiner)	26 May 2020 (Date)	O.G. Print Claim(s) 1	O.G. Print Figure 4

U.S. Patent and Trademark Office

Part of Paper No.: 20200526

Issue Classification	Application/Control No.	Applicant(s)/Patent Under Reexamination
	16/043,925	Pyles, Nathan
	Examiner	**Art Unit**
	SUNDHARA M GANESAN	3784

☑ Claims renumbered in the same order as presented by applicant ☐ CPA ☐ T.D. ☐ R.1.47

CLAIMS

Final	Original	Final	Original	Final	Original	Final	Original	Final	Original	Final	Original	Final	Original	Final	Original

NONE		Total Claims Allowed:	
(Assistant Examiner)	(Date)	20	
/SUNDHARA M GANESAN/ Primary Examiner, Art Unit 3784	26 May 2020	O.G. Print Claim(s)	O.G. Print Figure
(Primary Examiner)	(Date)	1	4

U.S. Patent and Trademark Office Part of Paper No.: 20200526

Search Notes	Application/Control No.	Applicant(s)/Patent Under Reexamination
	16/043,925	Pyles, Nathan
	Examiner	**Art Unit**
	SUNDHARA M GANESAN	3784

CPC - Searched*		
Symbol	**Date**	**Examiner**
(G06Q40/08 or G06F19/00 or G16H20/30 or G06F19/3481 or A63B24/0087 or A63B22/0235 or A63B2220/13 or A63B2230/50 or A63B2225/20 or A63B22/025 or A63B2225/50 or A63B2220/805 or A63B2220/56 or A63B2220/30 or A63B2024/0096 or A63B2024/0093 or A63B22/04 or A63B2230/505 or A63B2220/62 or A63B2220/20).cpc.	01/03/2020	SG

CPC Combination Sets - Searched*		
Symbol	**Date**	**Examiner**

US Classification - Searched*			
Class	**Subclass**	**Date**	**Examiner**

* See search history printout included with this form or the SEARCH NOTES box below to determine the scope of the search.

Search Notes		
Search Notes	**Date**	**Examiner**
Conducted inventor name search in EAST and PALM	01/03/2020	SG
Reviewed IDS docs	01/03/2020	SG
Developed and executed classification and text search, see EAST search history for details	01/03/2020	SG
Refreshed classification and text search, see EAST search history for details	05/26/2020	SG

Search Notes	Application/Control No.	Applicant(s)/Patent Under Reexamination
	16/043,925	Pyles, Nathan
	Examiner	**Art Unit**
	SUNDHARA M GANESAN	3784

Interference Search			
US Class/CPC Symbol	**US Subclass/CPC Group**	**Date**	**Examiner**
	(G06Q40/08 or G06F19/00 or G16H20/30 or G06F19/3481 or A63B24/0087 or A63B22/0235 or A63B2220/13 or A63B2230/50 or A63B2225/20 or A63B22/025 or A63B2225/50 or A63B2220/805 or A63B2220/56 or A63B2220/30 or A63B2024/0096 or A63B2024/0093 or A63B22/04 or A63B2230/505 or A63B2220/62 or A63B2220/20).cpc	05/26/2020	SG
	see EAST search history for interference text search terms and details	05/26/2020	SG

Bibliographic Data

Application No: 16/043,925

Foreign Priority claimed: ○ Yes ◉ No

35 USC 119 (a-d) conditions met: ☐ Yes ☑ No | ☐ Met After Allowance

Verified and Acknowledged: /SUNDHARA M GANESAN/ (Examiner's Signature) | Initials

Title: EXERCISE APPARATUS WITH EXERCISE USE VERIFICATION FUNCTION AND VERIFYING METHOD

FILING or 371(c) DATE	CLASS	GROUP ART UNIT	ATTORNEY DOCKET NO.
07/24/2018	482	3784	
RULE			

APPLICANTS

JOHNSON HEALTH TECH CO., LTD, Daya District, TAIWAN

INVENTORS

Nathan Pyles Lake Mills, WI, UNITED STATES

CONTINUING DATA

This application is a CON of 14983171 12/29/2015 PAT 10032227

14983171 has PRO of 62098309 12/30/2014

FOREIGN APPLICATIONS

IF REQUIRED, FOREIGN LICENSE GRANTED**

08/08/2018

STATE OR COUNTRY

UNITED STATES

ADDRESS

FILING FEE RECEIVED

$1,720

EAST Search History

EAST Search History (Prior Art)

Ref #	Hits	Search Query	DBs	Default Operator	Plurals	Time Stamp
L4	0	("("20090176629" | "6638198" | "8007408" | "8287434" | "8956268" | "9039580").PN.").PN.	US-PGPUB; USPAT; USOCR	OR	OFF	2020/05/26 10:22
L5	44065	(G06Q40/08 or G06F19/00 or G16H20/30 or G06F19/3481 or A63B24/0087 or A63B22/0235 or A63B2220/13 or A63B2230/50 or A63B2225/20 or A63B22/025 or A63B2225/50 or A63B2220/805 or A63B2220/56 or A63B2220/30 or A63B2024/0096 or A63B2024/0093 or A63B22/04 or A63B2230/505 or A63B2220/62 or A63B2220/20).cpc.	US-PGPUB; USPAT; USOCR	OR	OFF	2020/05/26 10:22
L6	36	((("Pyles") near3 ("Nathan"))).INV.	US-PGPUB; USPAT; USOCR	OR	OFF	2020/05/26 10:22
L7	6	("20090176629" | "6638198" | "8007408" | "8287434" | "8956268" | "9039580").PN.	US-PGPUB; USPAT; USOCR	OR	OFF	2020/05/26 10:22
L8	2	(treadmill and sensor and pressure and (current adj sensor)).clm.	US-PGPUB; USPAT; USOCR	OR	OFF	2020/05/26 10:22
L9	6	("8287434" | "8007408" | "8956268" | "6638198" | "20090176629" | "9039580").PN.	US-PGPUB; USPAT; USOCR	OR	OFF	2020/05/26 10:22
L10	79251	(current adj sensor)	US-PGPUB; USPAT; USOCR	OR	OFF	2020/05/26 10:22

L11	356192	current with sensor	US-PGPUB; USPAT; USOCR	OR	OFF	2020/05/26 10:22
L12	8	L7 or L8 or L9	US-PGPUB; USPAT; USOCR	OR	OFF	2020/05/26 10:22
L13	4	L12 and L11	US-PGPUB; USPAT; USOCR	OR	OFF	2020/05/26 10:22
L14	261	treadmill same occup$5	US-PGPUB; USPAT; USOCR	OR	OFF	2020/05/26 10:22
L15	157	treadmill with occup$5	US-PGPUB; USPAT; USOCR	OR	OFF	2020/05/26 10:22
L16	11	treadmill with occup$5 with sensor	US-PGPUB; USPAT; USOCR	OR	OFF	2020/05/26 10:22
L17	44	(treadmill with motor with current with (sens$4 or detect$4))	US-PGPUB; USPAT; USOCR	OR	OFF	2020/05/26 10:22
L18	522	watterson.in.	US-PGPUB; USPAT; USOCR	OR	OFF	2020/05/26 10:22
L19	48	L18 and website and internet and database	US-PGPUB; USPAT; USOCR	OR	OFF	2020/05/26 10:22
L20	42	L19 and treadmill	US-PGPUB; USPAT; USOCR	OR	OFF	2020/05/26 10:22

L21	38	L20 and @ay<"2014"	US-PGPUB; USPAT; USOCR	OR	OFF	2020/05/26 10:22
L22	4158	(A63B24/0062).cpc.	US-PGPUB; USPAT; USOCR	OR	OFF	2020/05/26 10:22
L23	1615	L22 and @ay<"2014"	US-PGPUB; USPAT; USOCR	OR	OFF	2020/05/26 10:22
L24	2	"20120214622"	US-PGPUB; USPAT; USOCR	OR	OFF	2020/05/26 10:22
L25	3507	(G16H20/30).cpc.	US-PGPUB; USPAT; USOCR	OR	OFF	2020/05/26 10:22
L26	924	L25 and @ay<"2014"	US-PGPUB; USPAT; USOCR	OR	OFF	2020/05/26 10:22
L27	368	L26 and (validate or verify or certify or affirm or authenticate or confirm or ratify or authorize or endorse)	US-PGPUB; USPAT; USOCR	OR	OFF	2020/05/26 10:22
L28	3507	(G16H20/30).cpc.	US-PGPUB; USPAT; USOCR	OR	OFF	2020/05/26 10:22
L29	924	L28 and @ay<"2014"	US-PGPUB; USPAT; USOCR	OR	OFF	2020/05/26 10:22
L30	368	L29 and (validate or verify or certify or affirm or authenticate or confirm or ratify or authorize or endorse)	US-PGPUB; USPAT; USOCR	OR	OFF	2020/05/26 10:22

L31	105	L30 and motor	US-PGPUB; USPAT; USOCR	OR	OFF	2020/05/26 10:22
L32	401305	sensor and (validate or verify or certify or affirm or authenticate or confirm or ratify or authorize or endorse)	US-PGPUB; USPAT; USOCR	OR	OFF	2020/05/26 10:22
L33	79236	sensor same (validate or verify or certify or affirm or authenticate or confirm or ratify or authorize or endorse)	US-PGPUB; USPAT; USOCR	OR	OFF	2020/05/26 10:22
L34	129108	A63B$/$.cpc.	US-PGPUB; USPAT; USOCR	OR	OFF	2020/05/26 10:22
L35	957	L33 and L34	US-PGPUB; USPAT; USOCR	OR	OFF	2020/05/26 10:22
L36	366	L35 and @ay<"2014"	US-PGPUB; USPAT; USOCR	OR	OFF	2020/05/26 10:22
L37	90	L36 and motor	US-PGPUB; USPAT; USOCR	OR	OFF	2020/05/26 10:22
L38	466880	compliance	US-PGPUB; USPAT; USOCR	OR	OFF	2020/05/26 10:22
L39	3023	L38 and L34	US-PGPUB; USPAT; USOCR	OR	OFF	2020/05/26 10:22
L40	1843	L39 and @ay<"2014"	US-PGPUB; USPAT; USOCR	OR	OFF	2020/05/26 10:22

L41	380	L40 and motor	US-PGPUB; USPAT; USOCR	OR	OFF	2020/05/26 10:22
L42	44	(US-20090176629-$ or US-20160189437-$ or US-20110059825-$ or US-20130274066-$ or US-20150367175-$ or US-20150119202-$ or US-20140302967-$ or US-20130035215-$ or US-20080032870-$ or US-20060276306-$ or US-20130330694-$ or US-20060205566-$ or US-20120237911-$ or US-20150258370-$ or US-20150157896-$ or US-20150157895-$ or US-20140256512-$ or US-20040133081-$ or US-20140187383-$ or US-20150134088-$ or US-20140173082-$ or US-20140074491-$ or US-20120296455-$ or US-20020055419-$ or US-20120071770-$ or US-20110191158-$).did. or (US-20080204225-$ or US-20150141201-$ or US-20150066171-$ or US-20140275821-$ or US-20130211562-$ or US-20130143718-$ or US-20120040799-$ or US-20100016678-$).did. or (US-9039580-$ or US-6575878-$ or US-7141006-$ or US-7048676-$ or US-6416444-$ or US-6055359-$ or US-5747955-$ or US-5290205-$ or US-5209710-$ or US-6050924-$).did.	US-PGPUB; USPAT	OR	OFF	2020/05/26 10:22
L43	31	L42 and motor	US-PGPUB; USPAT; USOCR	OR	OFF	2020/05/26 10:22
S1	0	("("20090176629" | "6638198" | "8007408" | "8287434" | "8956268" | "9039580").PN.").PN.	US-PGPUB; USPAT; USOCR	OR	OFF	2020/01/03 16:15
S2	42589	(G06Q40/08 or G06F19/00 or G16H20/30 or G06F19/3481 or A63B24/0087 or A63B22/0235 or A63B2220/13 or A63B2230/50 or A63B2225/20 or A63B22/025 or A63B2225/50 or A63B2220/805 or A63B2220/56 or A63B2220/30 or A63B2024/0096 or A63B2024/0093 or A63B22/04 or A63B2230/505 or A63B2220/62 or A63B2220/20).cpc.	US-PGPUB; USPAT; USOCR	OR	OFF	2020/01/03 16:22

S3	36	((("Pyles") near3 ("Nathan"))).INV.	US-PGPUB; USPAT; USOCR	OR	OFF	2020/01/03 16:27
S4	6	("20090176629" | "6638198" | "8007408" | "8287434" | "8956268" | "9039580").PN.	US-PGPUB; USPAT; USOCR	OR	OFF	2020/01/06 11:17
S5	2	(treadmill and sensor and pressure and (current adj sensor)).clm.	US-PGPUB; USPAT; USOCR	OR	OFF	2020/01/06 11:30
S6	6	("8287434" | "8007408" | "8956268" | "6638198" | "20090176629" | "9039580").PN.	US-PGPUB; USPAT; USOCR	OR	OFF	2020/01/06 11:31
S7	76228	(current adj sensor)	US-PGPUB; USPAT; USOCR	OR	OFF	2020/01/06 11:31
S8	342696	current with sensor	US-PGPUB; USPAT; USOCR	OR	OFF	2020/01/06 11:32
S9	8	S4 or S5 or S6	US-PGPUB; USPAT; USOCR	OR	OFF	2020/01/06 11:32
S10	4	S9 and S8	US-PGPUB; USPAT; USOCR	OR	OFF	2020/01/06 11:32
S11	246	treadmill same occup$5	US-PGPUB; USPAT; USOCR	OR	OFF	2020/01/06 11:35
S12	150	treadmill with occup$5	US-PGPUB; USPAT; USOCR	OR	OFF	2020/01/06 11:36

S13	11	treadmill with occup$5 with sensor	US-PGPUB; USPAT; USOCR	OR	OFF	2020/01/06 11:36
S14	42	(treadmill with motor with current with (sens$4 or detect$4))	US-PGPUB; USPAT; USOCR	OR	OFF	2020/01/06 11:44
S15	512	watterson.in.	US-PGPUB; USPAT; USOCR	OR	OFF	2020/01/06 11:54
S16	48	S15 and website and internet and database	US-PGPUB; USPAT; USOCR	OR	OFF	2020/01/06 11:54
S17	42	S16 and treadmill	US-PGPUB; USPAT; USOCR	OR	OFF	2020/01/06 11:55
S18	38	S17 and @ay<"2014"	US-PGPUB; USPAT; USOCR	OR	OFF	2020/01/06 11:55
S19	4094	(A63B24/0062).cpc.	US-PGPUB; USPAT; USOCR	OR	OFF	2020/04/13 11:17
S20	1607	S19 and @ay<"2014"	US-PGPUB; USPAT; USOCR	OR	OFF	2020/04/13 11:17
S21	2	"20120214622"	US-PGPUB; USPAT; USOCR	OR	OFF	2020/05/05 15:44
S22	3446	(G16H20/30).cpc.	US-PGPUB; USPAT; USOCR	OR	OFF	2020/05/06 10:28

S23	913	S22 and @ay<"2014"	US-PGPUB; USPAT; USOCR	OR	OFF	2020/05/06 10:28
S24	361	S23 and (validate or verify or certify or affirm or authenticate or confirm or ratify or authorize or endorse)	US-PGPUB; USPAT; USOCR	OR	OFF	2020/05/06 10:30
S25	3446	(G16H20/30).cpc.	US-PGPUB; USPAT; USOCR	OR	OFF	2020/05/06 17:35
S26	913	S25 and @ay<"2014"	US-PGPUB; USPAT; USOCR	OR	OFF	2020/05/06 17:35
S27	361	S26 and (validate or verify or certify or affirm or authenticate or confirm or ratify or authorize or endorse)	US-PGPUB; USPAT; USOCR	OR	OFF	2020/05/06 17:35
S28	100	S27 and motor	US-PGPUB; USPAT; USOCR	OR	OFF	2020/05/06 17:35
S29	398804	sensor and (validate or verify or certify or affirm or authenticate or confirm or ratify or authorize or endorse)	US-PGPUB; USPAT; USOCR	OR	OFF	2020/05/07 14:16
S30	78722	sensor same (validate or verify or certify or affirm or authenticate or confirm or ratify or authorize or endorse)	US-PGPUB; USPAT; USOCR	OR	OFF	2020/05/07 14:16
S31	128841	A63B$/$.cpc.	US-PGPUB; USPAT; USOCR	OR	OFF	2020/05/07 14:17
S32	951	S30 and S31	US-PGPUB; USPAT; USOCR	OR	OFF	2020/05/07 14:17

S33	366	S32 and @ay<"2014"	US-PGPUB; USPAT; USOCR	OR	OFF	2020/05/07 14:20
S34	90	S33 and motor	US-PGPUB; USPAT; USOCR	OR	OFF	2020/05/07 14:23
S35	464599	compliance	US-PGPUB; USPAT; USOCR	OR	OFF	2020/05/07 15:11
S36	3010	S35 and S31	US-PGPUB; USPAT; USOCR	OR	OFF	2020/05/07 15:11
S37	1843	S36 and @ay<"2014"	US-PGPUB; USPAT; USOCR	OR	OFF	2020/05/07 15:11
S38	380	S37 and motor	US-PGPUB; USPAT; USOCR	OR	OFF	2020/05/07 15:12
S39	44	(US-20090176629-$ or US-20160189437-$ or US-20110059825-$ or US-20130274066-$ or US-20150367175-$ or US-20150119202-$ or US-20140302967-$ or US-20130035215-$ or US-20080032870-$ or US-20060276306-$ or US-20130330694-$ or US-20060205566-$ or US-20120237911-$ or US-20150258370-$ or US-20150157896-$ or US-20150157895-$ or US-20140256512-$ or US-20040133081-$ or US-20140187383-$ or US-20150134088-$ or US-20140173082-$ or US-20140074491-$ or US-20120296455-$ or US-20020055419-$ or US-20120071770-$ or US-20110191158-$).did. or (US-20080204225-$ or US-20150141201-$ or US-20150066171-$ or US-20140275821-$ or US-20130211562-$ or US-20130143718-$ or US-20120040799-$ or US-20100016678-$).did. or (US-9039580-$ or US-6575878-$ or US-7141006-$ or US-7048676-$	US-PGPUB; USPAT	OR	OFF	2020/05/11 11:26

		or US-6416444-$ or US-6055359-$ or US-5747955-$ or US-5290205-$ or US-5209710-$ or US-6050924-$).did.				
S40	31	S39 and motor	US-PGPUB; USPAT; USOCR	OR	OFF	2020/05/11 11:26

EAST Search History (Interference)

Ref #	Hits	Search Query	DBs	Default Operator	Plurals	Time Stamp
L3	44019	(G06Q40/08 or G06F19/00 or G16H20/30 or G06F19/3481 or A63B24/0087 or A63B22/0235 or A63B2220/13 or A63B2230/50 or A63B2225/20 or A63B22/025 or A63B2225/50 or A63B2220/805 or A63B2220/56 or A63B2220/30 or A63B2024/0096 or A63B2024/0093 or A63B22/04 or A63B2230/505 or A63B2220/62 or A63B2220/20).cpc.	US-PGPUB; USPAT	OR	OFF	2020/05/26 10:22
L44	1	(motor and sensor and engagement and exercise and report and data).clm.	US-PGPUB; USPAT	OR	ON	2020/05/26 10:25
L45	1	(motor and exercise and use and sensor and reporting).clm.	US-PGPUB; USPAT	OR	ON	2020/05/26 10:28

5/26/2020 10:28:42 AM
C:\Users\sganesan2\Documents\EAST\Workspaces\16043925.wsp

PTO/SB/06 (09-11)
Approved for use through 1/31/2014. OMB 0651-0032
U.S. Patent and Trademark Office; U.S. DEPARTMENT OF COMMERCE
Under the Paperwork Reduction Act of 1995, no persons are required to respond to a collection of information unless it displays a valid OMB control number.

PATENT APPLICATION FEE DETERMINATION RECORD Substitute for Form PTO-875	Application or Docket Number 16/043,925	Filing Date 07/24/2018	☐ To be Mailed

ENTITY: ☑ LARGE ☐ SMALL ☐ MICRO

APPLICATION AS FILED - PART I

FOR	(Column 1) NUMBER FILED	(Column 2) NUMBER EXTRA		RATE ($)	FEE ($)
☐ BASIC FEE (37 CFR 1.16(a), (b), or (c))	N/A	N/A		N/A	
☐ SEARCH FEE (37 CFR 1.16(k), (i), or (m))	N/A	N/A		N/A	
☐ EXAMINATION FEE (37 CFR 1.16(o), (p), or (q))	N/A	N/A		N/A	
TOTAL CLAIMS (37 CFR 1.16(i))	minus 20 =	*		x $100 =	
INDEPENDENT CLAIMS (37 CFR 1.16(h))	minus 3 =	*		x $460 =	
☐ APPLICATION SIZE FEE (37 CFR 1.16(s))	If the specification and drawings exceed 100 sheets of paper, the application size fee due is $310 ($155 for small entity) for each additional 50 sheets or fraction thereof. See 35 U.S.C. 41(a)(1)(G) and 37 CFR 1.16(s).				
☐ MULTIPLE DEPENDENT CLAIM PRESENT (37 CFR 1.16(j))					
* If the difference in column 1 is less than zero, enter "0" in column 2.				TOTAL	

APPLICATION AS AMENDED - PART II

AMENDMENT	02/17/2020	(Column 1) CLAIMS REMAINING AFTER AMENDMENT		(Column 2) HIGHEST NUMBER PREVIOUSLY PAID FOR	(Column 3) PRESENT EXTRA		RATE ($)	ADDITIONAL FEE ($)
	Total (37 CFR 1.16(i))	* 20	Minus	** 20	= 0		x $100 =	0
	Independent (37 CFR 1.16(h))	* 2	Minus	*** 3	= 0		x $460 =	0
	☐ Application Size Fee (37 CFR 1.16(s))							
	☐ FIRST PRESENTATION OF MULTIPLE DEPENDENT CLAIM (37 CFR 1.16(j))							
							TOTAL ADD'L FEE	0

AMENDMENT		(Column 1) CLAIMS REMAINING AFTER AMENDMENT		(Column 2) HIGHEST NUMBER PREVIOUSLY PAID FOR	(Column 3) PRESENT EXTRA		RATE ($)	ADDITIONAL FEE ($)
	Total (37 CFR 1.16(i))	*	Minus	**	=		x $0 =	
	Independent (37 CFR 1.16(h))	*	Minus	***	=		x $0 =	
	☐ Application Size Fee (37 CFR 1.16(s))							
	☐ FIRST PRESENTATION OF MULTIPLE DEPENDENT CLAIM (37 CFR 1.16(j))							
							TOTAL ADD'L FEE	

* If the entry in column 1 is less than the entry in column 2, write "0" in column 3.	LIE
** If the "Highest Number Previously Paid For" IN THIS SPACE is less than 20, enter "20".	/TAMARA D HARRELL/
*** If the "Highest Number Previously Paid For" IN THIS SPACE is less than 3, enter "3".	
The "Highest Number Previously Paid For" (Total or Independent) is the highest number found in the appropriate box in column 1.	

This collection of information is required by 37 CFR 1.16. The information is required to obtain or retain a benefit by the public which is to file (and by the USPTO to process) an application. Confidentiality is governed by 35 U.S.C. 122 and 37 CFR 1.14. This collection is estimated to take 12 minutes to complete, including gathering, preparing, and submitting the completed application form to the USPTO. Time will vary depending upon the individual case. Any comments on the amount of time you require to complete this form and/or suggestions for reducing this burden, should be sent to the Chief Information Officer, U.S. Patent and Trademark Office, U.S. Department of Commerce, P.O. Box 1450, Alexandria, VA 22313-1450. DO NOT SEND FEES OR COMPLETED FORMS TO THIS ADDRESS. **SEND TO: Commissioner for Patents, P.O. Box 1450, Alexandria, VA 22313-1450.**

If you need assistance in completing the form, call 1-800-PTO-9199 and select option 2.

IN THE UNITED STATES PATENT AND TRADEMARK OFFICE
Group Art Unit No. 3784

In re

Patent Application of

Nathan Pyles

Application No. 16/043,925

Confirmation No. 6126

Filed: July 24, 2018

"EXERCISE APPARATUS WITH EXERCISE USE VERIFICATION FUNCTION AND VERIFYING METHOD"

Atty. Docket No. 011640-9081-US02

Commissioner for Patents
P.O. Box 1450
Alexandria, VA 22313-1450

RESPONSE AND AMENDMENT

Sir:

This Response is a reply to the Non-Final Office action of January 10, 2020, and is filed within the three-month period for response. In the event Applicant has overlooked the need for an extension, please consider this a request for the same. Please charge or credit Deposit Account No. 13-3080 with any shortage or overpayment of the fees associates with this Response. Please amend the application as follows:

Amendments to the Claims begin on page 2 of this paper;

Remarks begin on page 7 of this paper.

AMENDMENTS TO THE CLAIMS

This listing of claims will replace all prior versions, and listings, of the claims in the application:

1. (Currently Amended) An exercise apparatus comprising:

a motor;

an operating member driven by the motor;

a sensor operable to detect engagement of a user with the operating member;

a controller in communication with the operating member and the sensor, the controller configured to generate exercise use data when the operating member is driven by the motor; and

a communication interface in communication with the controller,

wherein the controller is configured determine whether the user is engaged with the operating member ~~to generate exercise use data~~ in response to movement of the operating member and the sensor detecting engagement of the user with the operating ~~unit~~member, ~~and~~

wherein in response to the controller determining that the user is engaged with the operating member, the controller is configured to report the exercise use data to the communication interface,

wherein in response to the controller determining that the user is not engaged with the operating member, the controller is configured to stop reporting the exercise use data to the communication interface, and

wherein the ~~controller transmits the exercise use data to the communication interface~~communication interface is configured to communicate the reported exercise use data to a third party.

2. (Currently Amended) The exercise apparatus of claim 1, wherein the exercise use data includes a distance traveled by the user while the ~~sensor detects engagement of the user with the operating member~~ user is detected as engaged with the operating member.

3. (Currently Amended) The exercise apparatus of claim 1, wherein the exercise use data includes a time spent exercising while the ~~sensor detects engagement of the user with the operating member~~user is detected as engaged with the operating member.

4. (Original) The exercise apparatus of claim 1, wherein the sensor includes a pressure sensor, and wherein the controller is configured to analyze data from the pressure sensor to ascertain whether the user is engaging the operating member.

5. (Original) The exercise apparatus of claim 4, wherein the operating member includes an endless belt that defines a user contact surface, and the pressure sensor is configured to detect an amount of pressure on the user contact surface.

6. (Currently Amended) The exercise apparatus of claim 1, wherein the controller compares data from the sensor to a known data parameter that is indicative of a user not engaging the operating member in order to detect whether ~~or not~~ the user is engaging the operating member.

7. (Currently Amended) The ~~method~~exercise apparatus of claim 6, wherein the known data parameter is ~~recognized during operational~~preprogrammed into the controller.

8. (Original) The exercise apparatus of claim 1, wherein the sensor includes a current sensor operably connected to the motor, and wherein the current sensor is configured to detect an input current into the motor during operation of the operating member, and wherein the controller is operable to analyze the input current to detect engagement of the user with the operating unit.

9. (Original) The exercise apparatus of claim 8, wherein the controller is configured to analyze a fluctuation in the input current.

10. (Original) The exercise apparatus of claim 1, wherein the communication interface is an internet interface.

11. (Original) The exercise apparatus of claim 10, wherein the internet interface is configured to transmit the exercise use data to a website storage device.

12. (Original) The exercise apparatus of claim 11, wherein the website storage device is a web based database.

13. (Original) The exercise apparatus of claim 11, wherein the exercise use data is transmitted to the website storage device via a communication link.

14. (Original) The exercise apparatus of claim 1, wherein the communication interface is a display device for directly showing the exercise use data to the user.

15. (Currently Amended) The exercise apparatus of claim 1, wherein the communication interface communicates the exercise use data to ~~a~~the third party via an internet connection.

16. (Currently Amended) A method of verifying the use of an exercise apparatus comprising:

operating a motor-driven operating member;

~~detecting engagement of the motor-driven operating member by a user;~~

~~generating exercise use data for a portion of time in response to detecting engagement of the motor-driven operating member by the user; and~~

~~transmitting the exercise use data to a communication interface~~

in response to operating the motor-driven operating member, generating exercise use data;

receiving, at a controller, sensor data from a sensor;

comparing, at the controller, the received sensor data with a known data parameter that is indicative of a user not engaging the motor-driven operating member;

in response to the comparison step indicating that the user is engaged with the motor-driven operating member, reporting the exercise use data to a communication interface;

in response to the comparison step indicating that the user is not engaged with the motor-driven operating member, ceasing to report the exercise use data to the communication interface; and

communicating the reported exercise use data from the communication interface to a third party.

17. (Currently Amended) The method of claim 16, wherein the ~~detecting step includes sensing pressure on the motor-driven operating member~~receiving step includes receiving data from a pressure sensor.

18. (Currently Amended) The method of claim 16, wherein the ~~detecting step includes sensing an input current drawn by the motor~~receiving step includes receiving data from a current sensor.

19. (Currently Amended) The method of claim 16, ~~further comprising communicating the exercise use data to a third party~~wherein the communicating step includes communicating the reported exercise use data to a third party via an internet connection.

20. (Currently Amended) The method of claim 16, wherein the ~~detecting step comprises comparing data sensed by a sensor to a data parameter that is indicative of a user not engaging the operating member~~known data parameter is preprogrammed into the controller.

REMARKS

Claims 1-3, 6, 7 and 15-20 have been amended, such that claims 1-20 remain pending. No new matter has been added.

Rejection of claim 7 under 35 U.S.C. § 112(b)

The Examiner rejected claim 7 under 35 U.S.C. § 112(b) because "the known data parameter" had no antecedent basis. In response, Applicant has amended claim 6, the claim from which claim 7 depends, to recite "a known data parameter." Thus, "the known data parameter" of claim 7 has antecedent basis in claim 6. Therefore, Applicant respectfully requests the Examiner withdraw the rejection of claim 7 under 35 U.S.C. § 112(b).

Rejection of claims 1-7 and 14 under 35 U.S.C. §102(a)(1) as being anticipated by U.S. Publication No. 2009/0176629 ("Yi")

Independent claim 1 has been amended to recite that the controller is configured to generate exercise use data when the operating member is driven by the motor, and in response to the controller determining that the user is engaged with the operating member, the controller is configured to report the exercise use data to the communication interface. Further, in response to the controller determining that the user is not engaged with the operating member, the controller is configured to stop reporting the exercise use data to the communication interface.

Support for this amendment can be found at paragraph 28 of the application.

Yi does not disclose the exercise use data reporting distinction in the invention of claim 1. Yi discloses a method of calculating and displaying exercise information such as exercise distance, time, and speed by tracking a user's footsteps on the belt 44 via a pressure sensor array 47 and a controller 40. The speed of the belt 44 can then be adjusted automatically based on the user's detected walking speed, such that the user does not need to adjust the speed manually.

In contrast, in the invention of claim 1, the controller generates exercise use data when the operating member is driven by the motor and the exercise use data that is generated while the operating member is driven by the motor is reported to the communication interface when the user is determined to be engaged with the operating member. In response to the controller determining that the user is not engaged with the operating member, the controller is configured to stop reporting the exercise use data to the communication interface. Yi discloses that distance, time and speed may be displayed on a display unit 42 while a user is on the belt 44 and exercising, but does not teach (1) that the controller 40 generates exercise use data while the belt 44 is driven by the motor (absent detection of footsteps by the pressure array 47); or (2) that the controller 40 stops reporting generated exercise use data to a communication interface when it is determined that the user is not on the belt.

Yi therefore fails to anticipate claim 1. Neither Choy nor Watterson teach the exercise use data reporting distinction of claim 1, and thus fail to cure the deficiencies of Yi. Therefore, Applicant respectfully submits that claim 1 is allowable. Claims 2-15 depend from claim 1 and are allowable for these and other reasons.

<u>Rejection of claim 16 under 35 U.S.C. §102(a)(1) as being anticipated by Yi</u>

Independent claim 16 has been amended to recite that in response to operating the motor-driven operating member, exercise use data is generated. In response to a comparison step indicating that a user is engaged with the motor-driven operating member, exercise use data is reported to a communication interface. In response to the comparison step indicating that the user is not engaged with the motor-driven operating member, exercise use data is ceased to be reported to the communication interface.

As discussed above with respect to claim 1, Yi discloses that distance, time and speed may be displayed on a display unit 42 while a user is on the belt 44 and exercising, but does not teach (1) generation of exercise use data while the belt 44 is driven by the motor (absent detection of footsteps by the pressure array 47); or (2) that the controller 40 ceases reporting exercise use data to a communication interface when it is determined that the user is not on the belt.

Yi therefore fails to anticipate claim 16. Neither Choy nor Watterson teach the exercise use data reporting distinction of claim 16, and thus fail to cure the deficiencies of Yi. Therefore, Applicant respectfully submits that claim 16 is allowable. Claims 17-20 depend from claim 16 and are allowable for these and other reasons.

CONCLUSION

Applicant respectfully submits that this application is now in condition for allowance. Therefore, entry of this Amendment and allowance of the claim is respectfully requested. If the Examiner has any questions or concerns that would help advance the prosecution of this application, please contact the undersigned attorney.

Respectfully submitted,

/matthew d. brown/

Matthew D. Brown
Reg. No. 75,032

Docket No. 011640-9081-US02
Michael Best & Friedrich LLP
100 East Wisconsin Avenue, Suite 3300
Milwaukee, Wisconsin 53202-4108
414-271-6560

Electronic Acknowledgement Receipt

EFS ID:	38602482
Application Number:	16043925
International Application Number:	
Confirmation Number:	6126
Title of Invention:	EXERCISE APPARATUS WITH EXERCISE USE VERIFICATION FUNCTION AND VERIFYING METHOD
First Named Inventor/Applicant Name:	Nathan Pyles
Customer Number:	23409
Filer:	Matthew D. Brown/Tanya Parent
Filer Authorized By:	Matthew D. Brown
Attorney Docket Number:	011640-9081-US02
Receipt Date:	17-FEB-2020
Filing Date:	24-JUL-2018
Time Stamp:	13:58:23
Application Type:	Utility under 35 USC 111(a)

Payment information:

Submitted with Payment	no

File Listing:

Document Number	Document Description	File Name	File Size(Bytes)/ Message Digest	Multi Part /.zip	Pages (if appl.)
1		27521600_011640-9081-US02_Response_-_as_filed.PDF	97358 4dc658f8d0e5344d45c75289ace3895e1056aedb	yes	9

	Multipart Description/PDF files in .zip description		
	Document Description	**Start**	**End**
	Amendment/Req. Reconsideration-After Non-Final Reject	1	1
	Claims	2	6
	Applicant Arguments/Remarks Made in an Amendment	7	9
Warnings:			
Information:			
	Total Files Size (in bytes):	97358	

This Acknowledgement Receipt evidences receipt on the noted date by the USPTO of the indicated documents, characterized by the applicant, and including page counts, where applicable. It serves as evidence of receipt similar to a Post Card, as described in MPEP 503.

New Applications Under 35 U.S.C. 111
If a new application is being filed and the application includes the necessary components for a filing date (see 37 CFR 1.53(b)-(d) and MPEP 506), a Filing Receipt (37 CFR 1.54) will be issued in due course and the date shown on this Acknowledgement Receipt will establish the filing date of the application.
National Stage of an International Application under 35 U.S.C. 371
If a timely submission to enter the national stage of an international application is compliant with the conditions of 35 U.S.C. 371 and other applicable requirements a Form PCT/DO/EO/903 indicating acceptance of the application as a national stage submission under 35 U.S.C. 371 will be issued in addition to the Filing Receipt, in due course.
New International Application Filed with the USPTO as a Receiving Office
If a new international application is being filed and the international application includes the necessary components for an international filing date (see PCT Article 11 and MPEP 1810), a Notification of the International Application Number and of the International Filing Date (Form PCT/RO/105) will be issued in due course, subject to prescriptions concerning national security, and the date shown on this Acknowledgement Receipt will establish the international filing date of the application.

UNITED STATES PATENT AND TRADEMARK OFFICE

UNITED STATES DEPARTMENT OF COMMERCE
United States Patent and Trademark Office
Address: COMMISSIONER FOR PATENTS
P.O. Box 1450
Alexandria, Virginia 22313-1450
www.uspto.gov

APPLICATION NO.	FILING DATE	FIRST NAMED INVENTOR	ATTORNEY DOCKET NO.	CONFIRMATION NO.
16/043,925	07/24/2018	Nathan Pyles	011640-9081-US02	6126

23409 7590 01/10/2020
MICHAEL BEST & FRIEDRICH LLP (Mke)
100 E WISCONSIN AVENUE
SUITE 3300
MILWAUKEE, WI 53202

EXAMINER
GANESAN, SUNDHARA M

ART UNIT	PAPER NUMBER
3784	

NOTIFICATION DATE	DELIVERY MODE
01/10/2020	ELECTRONIC

Please find below and/or attached an Office communication concerning this application or proceeding.

The time period for reply, if any, is set in the attached communication.

Notice of the Office communication was sent electronically on above-indicated "Notification Date" to the following e-mail address(es):

mkeipdocket@michaelbest.com

PTOL-90A (Rev. 04/07)

Office Action Summary	Application No. 16/043,925	Applicant(s) Pyles, Nathan	
	Examiner SUNDHARA M GANESAN	Art Unit 3784	AIA (FITF) Status Yes

-- The MAILING DATE of this communication appears on the cover sheet with the correspondence address --

Period for Reply

A SHORTENED STATUTORY PERIOD FOR REPLY IS SET TO EXPIRE 3 MONTHS FROM THE MAILING DATE OF THIS COMMUNICATION.

- Extensions of time may be available under the provisions of 37 CFR 1.136(a). In no event, however, may a reply be timely filed after SIX (6) MONTHS from the mailing date of this communication.
- If NO period for reply is specified above, the maximum statutory period will apply and will expire SIX (6) MONTHS from the mailing date of this communication.
- Failure to reply within the set or extended period for reply will, by statute, cause the application to become ABANDONED (35 U.S.C. § 133). Any reply received by the Office later than three months after the mailing date of this communication, even if timely filed, may reduce any earned patent term adjustment. See 37 CFR 1.704(b).

Status

1)☑ Responsive to communication(s) filed on 7/24/2018.

☐ A declaration(s)/affidavit(s) under **37 CFR 1.130(b)** was/were filed on _____.

2a)☐ This action is **FINAL.** 2b) ☑ This action is non-final.

3)☐ An election was made by the applicant in response to a restriction requirement set forth during the interview on _____; the restriction requirement and election have been incorporated into this action.

4)☐ Since this application is in condition for allowance except for formal matters, prosecution as to the merits is closed in accordance with the practice under *Ex parte Quayle*, 1935 C.D. 11, 453 O.G. 213.

Disposition of Claims*

5) ☑ Claim(s) 1-20 is/are pending in the application.

5a) Of the above claim(s) _____ is/are withdrawn from consideration.

6) ☐ Claim(s) _____ is/are allowed.

7) ☑ Claim(s) 1-20 is/are rejected.

8) ☐ Claim(s) _____ is/are objected to.

9) ☐ Claim(s) _____ are subject to restriction and/or election requirement

* If any claims have been determined allowable, you may be eligible to benefit from the **Patent Prosecution Highway** program at a participating intellectual property office for the corresponding application. For more information, please see http://www.uspto.gov/patents/init_events/pph/index.jsp or send an inquiry to **PPHfeedback@uspto.gov.**

Application Papers

10)☐ The specification is objected to by the Examiner.

11)☑ The drawing(s) filed on 7/24/2018 is/are: a)☑ accepted or b)☐ objected to by the Examiner.

Applicant may not request that any objection to the drawing(s) be held in abeyance. See 37 CFR 1.85(a).

Replacement drawing sheet(s) including the correction is required if the drawing(s) is objected to. See 37 CFR 1.121(d).

Priority under 35 U.S.C. § 119

12)☐ Acknowledgment is made of a claim for foreign priority under 35 U.S.C. § 119(a)-(d) or (f).

Certified copies:

a)☐ All b)☐ Some** c)☐ None of the:

1.☐ Certified copies of the priority documents have been received.

2.☐ Certified copies of the priority documents have been received in Application No. _____.

3.☐ Copies of the certified copies of the priority documents have been received in this National Stage application from the International Bureau (PCT Rule 17.2(a)).

** See the attached detailed Office action for a list of the certified copies not received.

Attachment(s)

1) ☑ Notice of References Cited (PTO-892)

2) ☑ Information Disclosure Statement(s) (PTO/SB/08a and/or PTO/SB/08b) Paper No(s)/Mail Date _____.

3) ☐ Interview Summary (PTO-413) Paper No(s)/Mail Date _____.

4) ☐ Other: _____.

DETAILED ACTION

Notice of Pre-AIA or AIA Status

The present application, filed on or after March 16, 2013, is being examined under the first inventor to file provisions of the AIA.

Claim Rejections - 35 USC § 112

The following is a quotation of 35 U.S.C. 112(b):
(b) CONCLUSION.—The specification shall conclude with one or more claims particularly pointing out and distinctly claiming the subject matter which the inventor or a joint inventor regards as the invention.

The following is a quotation of 35 U.S.C. 112 (pre-AIA), second paragraph:
The specification shall conclude with one or more claims particularly pointing out and distinctly claiming the subject matter which the applicant regards as his invention.

Claim 7 is rejected under 35 U.S.C. 112(b) or 35 U.S.C. 112 (pre-AIA), second paragraph, as being indefinite for failing to particularly point out and distinctly claim the subject matter which the inventor or a joint inventor, or for pre-AIA the applicant regards as the invention. The claim recites “the known data parameter”, but it is unclear what the known data parameter refers to, as the term lacks antecedent basis in the parent claims.

Claim Rejections - 35 USC § 102

In the event the determination of the status of the application as subject to AIA 35 U.S.C. 102 and 103 (or as subject to pre-AIA 35 U.S.C. 102 and 103) is incorrect, any correction of the statutory basis for the rejection will not be considered a new ground of

rejection if the prior art relied upon, and the rationale supporting the rejection, would be the same under either status.

The following is a quotation of the appropriate paragraphs of 35 U.S.C. 102 that form the basis for the rejections under this section made in this Office action:

> A person shall be entitled to a patent unless –
>
> (a)(2) the claimed invention was described in a patent issued under section 151, or in an application for patent published or deemed published under section 122(b), in which the patent or application, as the case may be, names another inventor and was effectively filed before the effective filing date of the claimed invention.

Claim(s) 1-7 and 14 is/are rejected under 35 U.S.C. 102(a)(1) as being anticipated by Yi (US PGPub. 2009/0176629). Yi describes the same invention as claimed, including: An exercise apparatus comprising: a motor; an operating member driven by the motor; a sensor (15) operable to detect engagement of a user with the operating member; a controller in communication with the operating member and the sensor; and a communication interface in communication with the controller, wherein the controller is configured to generate exercise use data in response to movement of the operating member and the sensor detecting engagement of the user with the operating unit, and wherein the controller transmits the exercise use data to the communication interface (see ABSTRACT).

Regarding claim 2, wherein the exercise use data includes a distance traveled by the user while the sensor detects engagement of the user with the operating member (see ABSTRACT).

Regarding claim 3, wherein the exercise use data includes a time spent exercising while the sensor detects engagement of the user with the operating member (para. 12).

Regarding claim 4, wherein the sensor includes a pressure sensor, and wherein the controller is configured to analyze data from the pressure sensor to ascertain whether the user is engaging the operating member (para. 12).

Regarding claim 5, wherein the operating member includes an endless belt that defines a user contact surface, and the pressure sensor is configured to detect an amount of pressure on the user contact surface (para. 12).

Regarding claim 6, wherein the controller compares data from the sensor to a data parameter that is indicative of a user not engaging the operating member in order to detect whether or not the user is engaging the operating member (ABSTRACT, when pressure sensor fails to detect the user).

Regarding claim 7, wherein the known data parameter is recognized during operational use (see ABSTRACT).

Regarding claim 14, wherein the communication interface is a display device for directly showing the exercise use data to the user.

Claim Rejections - 35 USC § 103

The following is a quotation of 35 U.S.C. 103 which forms the basis for all obviousness rejections set forth in this Office action:

> A patent for a claimed invention may not be obtained, notwithstanding that the claimed invention is not identically disclosed as set forth in section 102, if the differences between the claimed invention and the prior art are such that the claimed invention as a whole would have been obvious before the effective filing date of the claimed invention to a person having ordinary skill in the art to which the claimed invention pertains. Patentability shall not be negated by the manner in which the invention was made.

Claims 8 and 9 is/are rejected under 35 U.S.C. 103 as being unpatentable over Yi (US PGPub. 2009/0176629) in view of Choy (US Pat. 6,575,878). Yi does not expressly show but Choi teaches a current sensor to detect an input current to the motor and detect engagement of the user with the operating unit, by analyzing a fluctuation in the input current (see Choy Fig. 1 and ABSTRACT).

Before the effective filing date of the claimed invention, it would have been obvious to include the current sensor of Choy on the device of Yi. Doing so provides the predictable result of enhancing safety by stopping the belt if a user falls off or leaves the exercise equipment. Therefore, it would have been prima facie obvious to modify Yi as taught by Choy to obtain the invention as claimed.

Claims 10-13 and 15 is/are rejected under 35 U.S.C. 103 as being unpatentable over Yi (US PGPub. 2009/0176629) in view of Watterson (US PGPub. 2006/0205566). Watterson teaches an internet interface for storing exercise data to a website database via a communication link, the data being communicable to a third party (Fig. 12).

Before the effective filing date of the claimed invention, it would have been obvious to a person having ordinary skill in the art to include the networking and training features of Watterson on the device of Yi. Doing so provides the predictable result of allowing the user to easily store and access their training data so that they can monitor progress. Therefore, it would have been prima facie obvious to modify Yi as taught by Watterson to obtain the invention as claimed.

Claim(s) 16-17, 19-20 is/are rejected under 35 U.S.C. 102(a)(1) as being anticipated by unpatentable over Yi (US PGPub. 2009/0176629) in view of Watterson (US PGPub. 2006/0205566). Yi shows A method of verifying the use of an exercise apparatus comprising: operating a motor-driven operating member; detecting engagement of the motor-driven operating member by a user; generating exercise use data for a portion of time in response to detecting engagement of the motor-driven operating member by the user; and Watterson teaches transmitting the exercise use data to a communication interface (Watterson Fig. 12, iFit).

Before the effective filing date of the claimed invention, it would have been obvious to a person having ordinary skill in the art to include the networking and training features of Watterson on the device of Yi. Doing so provides the predictable result of allowing the user to easily store and access their training data so that they can monitor progress. Therefore, it would have been prima facie obvious to modify Yi as taught by Watterson to obtain the invention as claimed.

Regarding claim 17, Yi shows wherein the detecting step includes sensing pressure on the motor-driven operating member (see ABSTRACT).

Regarding claim 19, Watterson shows further comprising communicating the exercise use data to a third party. See rationale in claim 16 above for combining Watterson and Yi.

Regarding claim 20, wherein the detecting step comprises comparing data sensed by a sensor to a data parameter that is indicative of a user not engaging the operating member. (Yi, when no pressure is detected).

Claims 8 is/are rejected under 35 U.S.C. 103 as being unpatentable over Yi (US PGPub. 2009/0176629) in view of Watterson as applied to claim 16 above, and further in ivew of Choy (US Pat. 6,575,878). Yi does not expressly show but Choi teaches a current sensor to detect an input current to the motor and detect engagement of the user with the operating unit, by analyzing a fluctuation in the input current (see Choy Fig. 1 and ABSTRACT).

Before the effective filing date of the claimed invention, it would have been obvious to include the current sensor of Choy on the device of Yi. Doing so provides the predictable result of enhancing safety by stopping the belt if a user falls off or leaves the exercise equipment. Therefore, it would have been prima facie obvious to modify Yi as taught by Choy to obtain the invention as claimed.

Conclusion

The prior art made of record and not relied upon is considered pertinent to applicant's disclosure. See form PTO-892 for cited art of interest.

Any inquiry concerning this communication or earlier communications from the examiner should be directed to SUNDHARA M GANESAN whose telephone number is (571)272-3340. The examiner can normally be reached on 9:30AM-5:30PM.

Examiner interviews are available via telephone, in-person, and video conferencing using a USPTO supplied web-based collaboration tool. To schedule an interview, applicant is encouraged to use the USPTO Automated Interview Request (AIR) at http://www.uspto.gov/interviewpractice.

If attempts to reach the examiner by telephone are unsuccessful, the examiner's supervisor, LoAn Thanh can be reached on (571)272-4966. The fax phone number for the organization where this application or proceeding is assigned is 571-273-8300.

Information regarding the status of an application may be obtained from the Patent Application Information Retrieval (PAIR) system. Status information for published applications may be obtained from either Private PAIR or Public PAIR. Status information for unpublished applications is available through Private PAIR only. For more information about the PAIR system, see https://ppair-my.uspto.gov/pair/PrivatePair. Should you have questions on access to the Private PAIR system, contact the Electronic Business Center (EBC) at 866-217-9197 (toll-free). If you would like assistance from a USPTO Customer Service Representative or access to the automated information system, call 800-786-9199 (IN USA OR CANADA) or 571-272-1000.

/SUNDHARA M GANESAN/
Primary Examiner, Art Unit 3784

Notice of References Cited	Application/Control No. 16/043,925	Applicant(s)/Patent Under Reexamination Pyles, Nathan	
	Examiner SUNDHARA M GANESAN	Art Unit 3784	Page 1 of 1

U.S. PATENT DOCUMENTS

*		Document Number Country Code-Number-Kind Code	Date MM-YYYY	Name	CPC Classification	US Classification
*	A	US-20060205566-A1	09-2006	Watterson; Scott R.	A63B24/0084	482/8
*	B	US-6575878-B1	06-2003	Choy; Rick	A63B22/0235	482/51
*	C	US-20130035215-A1	02-2013	Ashby; Darren	A63B22/0242	482/54
*	D	US-20150119202-A1	04-2015	Hendrickson; Rick W.	A63B21/0051	482/54
*	E	US-20130274066-A1	10-2013	Ashby; Darren C.	A63B24/0087	482/4
	F					
	G					
	H					
	I					
	J					
	K					
	L					
	M					

FOREIGN PATENT DOCUMENTS

*		Document Number Country Code-Number-Kind Code	Date MM-YYYY	Country	Name	CPC Classification
	N					
	O					
	P					
	Q					
	R					
	S					
	T					

NON-PATENT DOCUMENTS

*		Include as applicable: Author, Title Date, Publisher, Edition or Volume, Pertinent Pages)
	U	
	V	
	W	
	X	

*A copy of this reference is not being furnished with this Office action. (See MPEP § 707.05(a).)
Dates in MM-YYYY format are publication dates. Classifications may be US or foreign.

Search Notes	Application/Control No.	Applicant(s)/Patent Under Reexamination
	16/043,925	Pyles, Nathan
	Examiner	**Art Unit**
	SUNDHARA M GANESAN	3784

CPC - Searched*		
Symbol	**Date**	**Examiner**
(G06Q40/08 or G06F19/00 or G16H20/30 or G06F19/3481 or A63B24/0087 or A63B22/0235 or A63B2220/13 or A63B2230/50 or A63B2225/20 or A63B22/025 or A63B2225/50 or A63B2220/805 or A63B2220/56 or A63B2220/30 or A63B2024/0096 or A63B2024/0093 or A63B22/04 or A63B2230/505 or A63B2220/62 or A63B2220/20).cpc.	01/03/2020	SG

CPC Combination Sets - Searched*		
Symbol	**Date**	**Examiner**

US Classification - Searched*			
Class	**Subclass**	**Date**	**Examiner**

* See search history printout included with this form or the SEARCH NOTES box below to determine the scope of the search.

Search Notes		
Search Notes	**Date**	**Examiner**
Conducted inventor name search in EAST and PALM	01/03/2020	SG
Reviewed IDS docs	01/03/2020	SG
Developed and executed classification and text search, see EAST search history for details	01/03/2020	SG

Interference Search			
US Class/CPC Symbol	**US Subclass/CPC Group**	**Date**	**Examiner**

Search Notes	Application/Control No.	Applicant(s)/Patent Under Reexamination
	16/043,925	Pyles, Nathan
	Examiner	**Art Unit**
	SUNDHARA M GANESAN	3784

Bibliographic Data

Application No: 16/043,925

Foreign Priority claimed: ○ Yes ◉ No

35 USC 119 (a-d) conditions met: ☐ Yes ☑ No | ☐ Met After Allowance

Verified and Acknowledged: /SUNDHARA M GANESAN/ (Examiner's Signature) | Initials

Title: EXERCISE APPARATUS WITH EXERCISE USE VERIFICATION FUNCTION AND VERIFYING METHOD

FILING or 371(c) DATE	CLASS	GROUP ART UNIT	ATTORNEY DOCKET NO.
07/24/2018	482	3784	
RULE			

APPLICANTS

JOHNSON HEALTH TECH CO., LTD, Daya District, TAIWAN

INVENTORS

Nathan Pyles Lake Mills, WI, UNITED STATES

CONTINUING DATA

This application is a CON of 14983171 12/29/2015 PAT 10032227

14983171 has PRO of 62098309 12/30/2014

FOREIGN APPLICATIONS

IF REQUIRED, FOREIGN LICENSE GRANTED**

08/08/2018

STATE OR COUNTRY

UNITED STATES

ADDRESS

FILING FEE RECEIVED

$1,720

Doc code: IDS
Doc description: Information Disclosure Statement (IDS) Filed

PTO/SB/08a (03-15)
Approved for use through 07/31/2016. OMB 0651-0031
U.S. Patent and Trademark Office; U.S. DEPARTMENT OF COMMERCE
Under the Paperwork Reduction Act of 1995, no persons are required to respond to a collection of information unless it contains a valid OMB control number.

INFORMATION DISCLOSURE STATEMENT BY APPLICANT

(Not for submission under 37 CFR 1.99)

Application Number	16043925
Filing Date	2018-07-24
First Named Inventor	Nathan Pyles
Art Unit	3784
Examiner Name	Sundhara M. Ganesan
Attorney Docket Number	011640-9081-US02

U.S.PATENTS Remove

Examiner Initial*	Cite No	Patent Number	Kind Code[1]	Issue Date	Name of Patentee or Applicant of cited Document	Pages,Columns,Lines where Relevant Passages or Relevant Figures Appear
	1	6638198		2003-10-28	Shea	
	2	8287434		2012-10-16	Zavadsky et al.	
	3	8007408		2011-08-30	Moran et al.	
	4	8956268		2015-02-17	Huang et al.	
	5	9039580		2015-05-26	Bayerlein et al.	

If you wish to add additional U.S. Patent citation information please click the Add button. Add

U.S.PATENT APPLICATION PUBLICATIONS Remove

Examiner Initial*	Cite No	Publication Number	Kind Code[1]	Publication Date	Name of Patentee or Applicant of cited Document	Pages,Columns,Lines where Relevant Passages or Relevant Figures Appear
	1	20090176629		2009-07-09	Yi	

If you wish to add additional U.S. Published Application citation information please click the Add button. Add

FOREIGN PATENT DOCUMENTS Remove

ALL REFERENCES CONSIDERED EXCEPT WHERE LINED THROUGH. /S.M.G/

INFORMATION DISCLOSURE STATEMENT BY APPLICANT

(Not for submission under 37 CFR 1.99)

Application Number	16043925
Filing Date	2018-07-24
First Named Inventor	Nathan Pyles
Art Unit	3784
Examiner Name	Sundhara M. Ganesan
Attorney Docket Number	011640-9081-US02

Examiner Initial*	Cite No	Foreign Document Number[3]	Country Code[2]	Kind Code[4]	Publication Date	Name of Patentee or Applicant of cited Document	Pages,Columns,Lines where Relevant Passages or Relevant Figures Appear	T[5]
	1							

If you wish to add additional Foreign Patent Document citation information please click the Add button Add

NON-PATENT LITERATURE DOCUMENTS Remove

Examiner Initials*	Cite No	Include name of the author (in CAPITAL LETTERS), title of the article (when appropriate), title of the item (book, magazine, journal, serial, symposium, catalog, etc), date, pages(s), volume-issue number(s), publisher, city and/or country where published.	T[5]
	1		

If you wish to add additional non-patent literature document citation information please click the Add button Add

EXAMINER SIGNATURE

Examiner Signature	/SUNDHARA M GANESAN/	Date Considered	01/03/2020

*EXAMINER: Initial if reference considered, whether or not citation is in conformance with MPEP 609. Draw line through a citation if not in conformance and not considered. Include copy of this form with next communication to applicant.

[1] See Kind Codes of USPTO Patent Documents at www.USPTO.GOV or MPEP 901.04. [2] Enter office that issued the document, by the two-letter code (WIPO Standard ST.3). [3] For Japanese patent documents, the indication of the year of the reign of the Emperor must precede the serial number of the patent document. [4] Kind of document by the appropriate symbols as indicated on the document under WIPO Standard ST.16 if possible. [5] Applicant is to place a check mark here if English language translation is attached.

ALL REFERENCES CONSIDERED EXCEPT WHERE LINED THROUGH. /S.M.G/

INFORMATION DISCLOSURE STATEMENT BY APPLICANT (Not for submission under 37 CFR 1.99)		
	Application Number	16043925
	Filing Date	2018-07-24
	First Named Inventor	Nathan Pyles
	Art Unit	3784
	Examiner Name	Sundhara M. Ganesan
	Attorney Docket Number	011640-9081-US02

CERTIFICATION STATEMENT

Please see 37 CFR 1.97 and 1.98 to make the appropriate selection(s):

That each item of information contained in the information disclosure statement was first cited in any communication from a foreign patent office in a counterpart foreign application not more than three months prior to the filing of the information disclosure statement. See 37 CFR 1.97(e)(1).

OR

☐ That no item of information contained in the information disclosure statement was cited in a communication from a foreign patent office in a counterpart foreign application, and, to the knowledge of the person signing the certification after making reasonable inquiry, no item of information contained in the information disclosure statement was known to any individual designated in 37 CFR 1.56(c) more than three months prior to the filing of the information disclosure statement. See 37 CFR 1.97(e)(2).

See attached certification statement.

The fee set forth in 37 CFR 1.17 (p) has been submitted herewith.

☒ A certification statement is not submitted herewith.

SIGNATURE

A signature of the applicant or representative is required in accordance with CFR 1.33, 10.18. Please see CFR 1.4(d) for the form of the signature.

Signature	/matthew d. brown/	Date (YYYY-MM-DD)	2018-10-23
Name/Print	Matthew D. Brown	Registration Number	75,032

This collection of information is required by 37 CFR 1.97 and 1.98. The information is required to obtain or retain a benefit by the public which is to file (and by the USPTO to process) an application. Confidentiality is governed by 35 U.S.C. 122 and 37 CFR 1.14. This collection is estimated to take 1 hour to complete, including gathering, preparing and submitting the completed application form to the USPTO. Time will vary depending upon the individual case. Any comments on the amount of time you require to complete this form and/or suggestions for reducing this burden, should be sent to the Chief Information Officer, U.S. Patent and Trademark Office, U.S. Department of Commerce, P.O. Box 1450, Alexandria, VA 22313-1450. DO NOT SEND FEES OR COMPLETED FORMS TO THIS ADDRESS. **SEND TO: Commissioner for Patents, P.O. Box 1450, Alexandria, VA 22313-1450.**

EFS Web 2.1.17

ALL REFERENCES CONSIDERED EXCEPT WHERE LINED THROUGH. /S.M.G/

Privacy Act Statement

The Privacy Act of 1974 (P.L. 93-579) requires that you be given certain information in connection with your submission of the attached form related to a patent application or patent. Accordingly, pursuant to the requirements of the Act, please be advised that: (1) the general authority for the collection of this information is 35 U.S.C. 2(b)(2); (2) furnishing of the information solicited is voluntary; and (3) the principal purpose for which the information is used by the U.S. Patent and Trademark Office is to process and/or examine your submission related to a patent application or patent. If you do not furnish the requested information, the U.S. Patent and Trademark Office may not be able to process and/or examine your submission, which may result in termination of proceedings or abandonment of the application or expiration of the patent.

The information provided by you in this form will be subject to the following routine uses:

1. The information on this form will be treated confidentially to the extent allowed under the Freedom of Information Act (5 U.S.C. 552) and the Privacy Act (5 U.S.C. 552a). Records from this system of records may be disclosed to the Department of Justice to determine whether the Freedom of Information Act requires disclosure of these record s.

2. A record from this system of records may be disclosed, as a routine use, in the course of presenting evidence to a court, magistrate, or administrative tribunal, including disclosures to opposing counsel in the course of settlement negotiations.

3. A record in this system of records may be disclosed, as a routine use, to a Member of Congress submitting a request involving an individual, to whom the record pertains, when the individual has requested assistance from the Member with respect to the subject matter of the record.

4. A record in this system of records may be disclosed, as a routine use, to a contractor of the Agency having need for the information in order to perform a contract. Recipients of information shall be required to comply with the requirements of the Privacy Act of 1974, as amended, pursuant to 5 U.S.C. 552a(m).

5. A record related to an International Application filed under the Patent Cooperation Treaty in this system of records may be disclosed, as a routine use, to the International Bureau of the World Intellectual Property Organization, pursuant to the Patent Cooperation Treaty.

6. A record in this system of records may be disclosed, as a routine use, to another federal agency for purposes of National Security review (35 U.S.C. 181) and for review pursuant to the Atomic Energy Act (42 U.S.C. 218(c)).

7. A record from this system of records may be disclosed, as a routine use, to the Administrator, General Services, or his/her designee, during an inspection of records conducted by GSA as part of that agency's responsibility to recommend improvements in records management practices and programs, under authority of 44 U.S.C. 2904 and 2906. Such disclosure shall be made in accordance with the GSA regulations governing inspection of records for this purpose, and any other relevant (i.e., GSA or Commerce) directive. Such disclosure shall not be used to make determinations about individuals.

8. A record from this system of records may be disclosed, as a routine use, to the public after either publication of the application pursuant to 35 U.S.C. 122(b) or issuance of a patent pursuant to 35 U.S.C. 151. Further, a record may be disclosed, subject to the limitations of 37 CFR 1.14, as a routine use, to the public if the record was filed in an application which became abandoned or in which the proceedings were terminated and which application is referenced by either a published application, an application open to public inspections or an issued patent.

9. A record from this system of records may be disclosed, as a routine use, to a Federal, State, or local law enforcement agency, if the USPTO becomes aware of a violation or potential violation of law or regulation.

ALL REFERENCES CONSIDERED EXCEPT WHERE LINED THROUGH. /S.M.G/

EAST Search History

EAST Search History (Prior Art)

Ref #	Hits	Search Query	DBs	Default Operator	Plurals	Time Stamp
L1	6	("20090176629" | "6638198" | "8007408" | "8287434" | "8956268" | "9039580").PN.	US-PGPUB; USPAT; USOCR	OR	OFF	2020/01/06 11:17
L2	2	(treadmill and sensor and pressure and (current adj sensor)).clm.	US-PGPUB; USPAT; USOCR	OR	OFF	2020/01/06 11:30
L3	6	("8287434" | "8007408" | "8956268" | "6638198" | "20090176629" | "9039580").PN.	US-PGPUB; USPAT; USOCR	OR	OFF	2020/01/06 11:31
L4	76228	(current adj sensor)	US-PGPUB; USPAT; USOCR	OR	OFF	2020/01/06 11:31
L5	342696	current with sensor	US-PGPUB; USPAT; USOCR	OR	OFF	2020/01/06 11:32
L6	8	1 or 2 or 3	US-PGPUB; USPAT; USOCR	OR	OFF	2020/01/06 11:32
L7	4	6 and 5	US-PGPUB; USPAT; USOCR	OR	OFF	2020/01/06 11:32
L8	246	treadmill same occup$5	US-PGPUB; USPAT; USOCR	OR	OFF	2020/01/06 11:35
L9	150	treadmill with occup$5	US-PGPUB; USPAT; USOCR	OR	OFF	2020/01/06 11:36
L10	11	treadmill with occup$5 with sensor	US-PGPUB; USPAT; USOCR	OR	OFF	2020/01/06 11:36
L11	42	(treadmill with motor with current with (sens$4 or detect$4))	US-PGPUB; USPAT; USOCR	OR	OFF	2020/01/06 11:44
L12	512	watterson.in.	US-PGPUB; USPAT; USOCR	OR	OFF	2020/01/06 11:54

L13	48	12 and website and internet and database	US-PGPUB; USPAT; USOCR	OR	OFF	2020/01/06 11:54
L14	42	13 and treadmill	US-PGPUB; USPAT; USOCR	OR	OFF	2020/01/06 11:55
L15	38	14 and @ay<"2014"	US-PGPUB; USPAT; USOCR	OR	OFF	2020/01/06 11:55
S1	0	("("20090176629" | "6638198" | "8007408" | "8287434" | "8956268" | "9039580").PN.").PN.	US-PGPUB; USPAT; USOCR	OR	OFF	2020/01/03 16:15
S2	42589	(G06Q40/08 or G06F19/00 or G16H20/30 or G06F19/3481 or A63B24/0087 or A63B22/0235 or A63B2220/13 or A63B2230/50 or A63B2225/20 or A63B22/025 or A63B2225/50 or A63B2220/805 or A63B2220/56 or A63B2220/30 or A63B2024/0096 or A63B2024/0093 or A63B22/04 or A63B2230/505 or A63B2220/62 or A63B2220/20).cpc.	US-PGPUB; USPAT; USOCR	OR	OFF	2020/01/03 16:22
S3	36	((("Pyles") near3 ("Nathan"))).INV.	US-PGPUB; USPAT; USOCR	OR	OFF	2020/01/03 16:27

EAST Search History (Interference)

<This search history is empty>

1/6/2020 12:05:52 PM
C:\Users\sganesan2\Documents\EAST\Workspaces\16043925.wsp

UNITED STATES PATENT AND TRADEMARK OFFICE

UNITED STATES DEPARTMENT OF COMMERCE
United States Patent and Trademark Office
Address: COMMISSIONER FOR PATENTS
P.O. Box 1450
Alexandria, Virginia 22313-1450
www.uspto.gov

APPLICATION NUMBER	FILING OR 371(C) DATE	FIRST NAMED APPLICANT	ATTY. DOCKET NO./TITLE
16/043,925	07/24/2018	Nathan Pyles	011640-9081-US02

CONFIRMATION NO. 6126

23409
MICHAEL BEST & FRIEDRICH LLP (Mke)
100 E WISCONSIN AVENUE
Suite 3300
MILWAUKEE, WI 53202

PUBLICATION NOTICE

OC000000103835950

Title:EXERCISE APPARATUS WITH EXERCISE USE VERIFICATION FUNCTION AND VERIFYING METHOD

Publication No.US-2018-0330450-A1
Publication Date:11/15/2018

NOTICE OF PUBLICATION OF APPLICATION

The above-identified application will be electronically published as a patent application publication pursuant to 37 CFR 1.211, et seq. The patent application publication number and publication date are set forth above.

The publication may be accessed through the USPTO's publically available Searchable Databases via the Internet at www.uspto.gov. The direct link to access the publication is currently http://www.uspto.gov/patft/.

The publication process established by the Office does not provide for mailing a copy of the publication to applicant. A copy of the publication may be obtained from the Office upon payment of the appropriate fee set forth in 37 CFR 1.19(a)(1). Orders for copies of patent application publications are handled by the USPTO's Public Records Division. The Public Records Division can be reached by telephone at (571) 272-3150 or (800) 972-6382, by facsimile at (571) 273-3250, by mail addressed to the United States Patent and Trademark Office, Public Records Division, Alexandria, VA 22313-1450 or via the Internet.

In addition, information on the status of the application, including the mailing date of Office actions and the dates of receipt of correspondence filed in the Office, may also be accessed via the Internet through the Patent Electronic Business Center at www.uspto.gov using the public side of the Patent Application Information and Retrieval (PAIR) system. The direct link to access this status information is currently https://portal.uspto.gov/pair/PublicPair. Prior to publication, such status information is confidential and may only be obtained by applicant using the private side of PAIR.

Further assistance in electronically accessing the publication, or about PAIR, is available by calling the Patent Electronic Business Center at 1-866-217-9197.

Office of Data Managment, Application Assistance Unit (571) 272-4000, or (571) 272-4200, or 1-888-786-0101

PTO/SB/08a (03-15)
Approved for use through 07/31/2016. OMB 0651-0031
U.S. Patent and Trademark Office; U.S. DEPARTMENT OF COMMERCE

Under the Paperwork Reduction Act of 1995, no persons are required to respond to a collection of information unless it contains a valid OMB control number.

INFORMATION DISCLOSURE STATEMENT BY APPLICANT

(Not for submission under 37 CFR 1.99)

Application Number	16043925
Filing Date	2018-07-24
First Named Inventor	Nathan Pyles
Art Unit	3784
Examiner Name	Sundhara M. Ganesan
Attorney Docket Number	011640-9081-US02

U.S.PATENTS Remove

Examiner Initial*	Cite No	Patent Number	Kind Code[1]	Issue Date	Name of Patentee or Applicant of cited Document	Pages,Columns,Lines where Relevant Passages or Relevant Figures Appear
	1	6638198		2003-10-28	Shea	
	2	8287434		2012-10-16	Zavadsky et al.	
	3	8007408		2011-08-30	Moran et al.	
	4	8956268		2015-02-17	Huang et al.	
	5	9039580		2015-05-26	Bayerlein et al.	

If you wish to add additional U.S. Patent citation information please click the Add button. Add

U.S.PATENT APPLICATION PUBLICATIONS Remove

Examiner Initial*	Cite No	Publication Number	Kind Code[1]	Publication Date	Name of Patentee or Applicant of cited Document	Pages,Columns,Lines where Relevant Passages or Relevant Figures Appear
	1	20090176629		2009-07-09	Yi	

If you wish to add additional U.S. Published Application citation information please click the Add button. Add

FOREIGN PATENT DOCUMENTS Remove

INFORMATION DISCLOSURE STATEMENT BY APPLICANT (Not for submission under 37 CFR 1.99)		
	Application Number	16043925
	Filing Date	2018-07-24
	First Named Inventor	Nathan Pyles
	Art Unit	3784
	Examiner Name	Sundhara M. Ganesan
	Attorney Docket Number	011640-9081-US02

Examiner Initial*	Cite No	Foreign Document Number[3]	Country Code[2] i	Kind Code[4]	Publication Date	Name of Patentee or Applicant of cited Document	Pages,Columns,Lines where Relevant Passages or Relevant Figures Appear	T[5]
	1							

If you wish to add additional Foreign Patent Document citation information please click the Add button Add

NON-PATENT LITERATURE DOCUMENTS Remove

Examiner Initials*	Cite No	Include name of the author (in CAPITAL LETTERS), title of the article (when appropriate), title of the item (book, magazine, journal, serial, symposium, catalog, etc), date, pages(s), volume-issue number(s), publisher, city and/or country where published.	T[5]
	1		

If you wish to add additional non-patent literature document citation information please click the Add button Add

EXAMINER SIGNATURE

Examiner Signature		Date Considered	

*EXAMINER: Initial if reference considered, whether or not citation is in conformance with MPEP 609. Draw line through a citation if not in conformance and not considered. Include copy of this form with next communication to applicant.

[1] See Kind Codes of USPTO Patent Documents at www.USPTO.GOV or MPEP 901.04. [2] Enter office that issued the document, by the two-letter code (WIPO Standard ST.3). [3] For Japanese patent documents, the indication of the year of the reign of the Emperor must precede the serial number of the patent document. [4] Kind of document by the appropriate symbols as indicated on the document under WIPO Standard ST.16 if possible. [5] Applicant is to place a check mark here if English language translation is attached.

EFS Web 2.1.17

INFORMATION DISCLOSURE STATEMENT BY APPLICANT (Not for submission under 37 CFR 1.99)		
	Application Number	16043925
	Filing Date	2018-07-24
	First Named Inventor	Nathan Pyles
	Art Unit	3784
	Examiner Name	Sundhara M. Ganesan
	Attorney Docket Number	011640-9081-US02

CERTIFICATION STATEMENT

Please see 37 CFR 1.97 and 1.98 to make the appropriate selection(s):

That each item of information contained in the information disclosure statement was first cited in any communication from a foreign patent office in a counterpart foreign application not more than three months prior to the filing of the information disclosure statement. See 37 CFR 1.97(e)(1).

OR

☐ That no item of information contained in the information disclosure statement was cited in a communication from a foreign patent office in a counterpart foreign application, and, to the knowledge of the person signing the certification after making reasonable inquiry, no item of information contained in the information disclosure statement was known to any individual designated in 37 CFR 1.56(c) more than three months prior to the filing of the information disclosure statement. See 37 CFR 1.97(e)(2).

See attached certification statement.

The fee set forth in 37 CFR 1.17 (p) has been submitted herewith.

☒ A certification statement is not submitted herewith.

SIGNATURE

A signature of the applicant or representative is required in accordance with CFR 1.33, 10.18. Please see CFR 1.4(d) for the form of the signature.

Signature	/matthew d. brown/	Date (YYYY-MM-DD)	2018-10-23
Name/Print	Matthew D. Brown	Registration Number	75,032

This collection of information is required by 37 CFR 1.97 and 1.98. The information is required to obtain or retain a benefit by the public which is to file (and by the USPTO to process) an application. Confidentiality is governed by 35 U.S.C. 122 and 37 CFR 1.14. This collection is estimated to take 1 hour to complete, including gathering, preparing and submitting the completed application form to the USPTO. Time will vary depending upon the individual case. Any comments on the amount of time you require to complete this form and/or suggestions for reducing this burden, should be sent to the Chief Information Officer, U.S. Patent and Trademark Office, U.S. Department of Commerce, P.O. Box 1450, Alexandria, VA 22313-1450. DO NOT SEND FEES OR COMPLETED FORMS TO THIS ADDRESS. **SEND TO: Commissioner for Patents, P.O. Box 1450, Alexandria, VA 22313-1450.**

EFS Web 2.1.17

Privacy Act Statement

The Privacy Act of 1974 (P.L. 93-579) requires that you be given certain information in connection with your submission of the attached form related to a patent application or patent. Accordingly, pursuant to the requirements of the Act, please be advised that: (1) the general authority for the collection of this information is 35 U.S.C. 2(b)(2); (2) furnishing of the information solicited is voluntary; and (3) the principal purpose for which the information is used by the U.S. Patent and Trademark Office is to process and/or examine your submission related to a patent application or patent. If you do not furnish the requested information, the U.S. Patent and Trademark Office may not be able to process and/or examine your submission, which may result in termination of proceedings or abandonment of the application or expiration of the patent.

The information provided by you in this form will be subject to the following routine uses:

1. The information on this form will be treated confidentially to the extent allowed under the Freedom of Information Act (5 U.S.C. 552) and the Privacy Act (5 U.S.C. 552a). Records from this system of records may be disclosed to the Department of Justice to determine whether the Freedom of Information Act requires disclosure of these record s.

2. A record from this system of records may be disclosed, as a routine use, in the course of presenting evidence to a court, magistrate, or administrative tribunal, including disclosures to opposing counsel in the course of settlement negotiations.

3. A record in this system of records may be disclosed, as a routine use, to a Member of Congress submitting a request involving an individual, to whom the record pertains, when the individual has requested assistance from the Member with respect to the subject matter of the record.

4. A record in this system of records may be disclosed, as a routine use, to a contractor of the Agency having need for the information in order to perform a contract. Recipients of information shall be required to comply with the requirements of the Privacy Act of 1974, as amended, pursuant to 5 U.S.C. 552a(m).

5. A record related to an International Application filed under the Patent Cooperation Treaty in this system of records may be disclosed, as a routine use, to the International Bureau of the World Intellectual Property Organization, pursuant to the Patent Cooperation Treaty.

6. A record in this system of records may be disclosed, as a routine use, to another federal agency for purposes of National Security review (35 U.S.C. 181) and for review pursuant to the Atomic Energy Act (42 U.S.C. 218(c)).

7. A record from this system of records may be disclosed, as a routine use, to the Administrator, General Services, or his/her designee, during an inspection of records conducted by GSA as part of that agency's responsibility to recommend improvements in records management practices and programs, under authority of 44 U.S.C. 2904 and 2906. Such disclosure shall be made in accordance with the GSA regulations governing inspection of records for this purpose, and any other relevant (i.e., GSA or Commerce) directive. Such disclosure shall not be used to make determinations about individuals.

8. A record from this system of records may be disclosed, as a routine use, to the public after either publication of the application pursuant to 35 U.S.C. 122(b) or issuance of a patent pursuant to 35 U.S.C. 151. Further, a record may be disclosed, subject to the limitations of 37 CFR 1.14, as a routine use, to the public if the record was filed in an application which became abandoned or in which the proceedings were terminated and which application is referenced by either a published application, an application open to public inspections or an issued patent.

9. A record from this system of records may be disclosed, as a routine use, to a Federal, State, or local law enforcement agency, if the USPTO becomes aware of a violation or potential violation of law or regulation.

Electronic Acknowledgement Receipt

EFS ID:	34087156
Application Number:	16043925
International Application Number:	
Confirmation Number:	6126
Title of Invention:	EXERCISE APPARATUS WITH EXERCISE USE VERIFICATION FUNCTION AND VERIFYING METHOD
First Named Inventor/Applicant Name:	Nathan Pyles
Customer Number:	23409
Filer:	Matthew D. Brown/Alicia Astorga
Filer Authorized By:	Matthew D. Brown
Attorney Docket Number:	011640-9081-US02
Receipt Date:	24-OCT-2018
Filing Date:	24-JUL-2018
Time Stamp:	10:10:13
Application Type:	Utility under 35 USC 111(a)

Payment information:

Submitted with Payment	no

File Listing:

Document Number	Document Description	File Name	File Size(Bytes)/ Message Digest	Multi Part /.zip	Pages (if appl.)
1	Information Disclosure Statement (IDS) Form (SB08)	24445089_011640-9081-US02_IDS.PDF	1035199 fe0dbb8dfd2431374db5ef5e0c2e174314a48a1e	no	4

Warnings:

Information:	
Total Files Size (in bytes):	1035199

This Acknowledgement Receipt evidences receipt on the noted date by the USPTO of the indicated documents, characterized by the applicant, and including page counts, where applicable. It serves as evidence of receipt similar to a Post Card, as described in MPEP 503.

New Applications Under 35 U.S.C. 111
If a new application is being filed and the application includes the necessary components for a filing date (see 37 CFR 1.53(b)-(d) and MPEP 506), a Filing Receipt (37 CFR 1.54) will be issued in due course and the date shown on this Acknowledgement Receipt will establish the filing date of the application.
National Stage of an International Application under 35 U.S.C. 371
If a timely submission to enter the national stage of an international application is compliant with the conditions of 35 U.S.C. 371 and other applicable requirements a Form PCT/DO/EO/903 indicating acceptance of the application as a national stage submission under 35 U.S.C. 371 will be issued in addition to the Filing Receipt, in due course.
New International Application Filed with the USPTO as a Receiving Office
If a new international application is being filed and the international application includes the necessary components for an international filing date (see PCT Article 11 and MPEP 1810), a Notification of the International Application Number and of the International Filing Date (Form PCT/RO/105) will be issued in due course, subject to prescriptions concerning national security, and the date shown on this Acknowledgement Receipt will establish the international filing date of the application.

UNITED STATES PATENT AND TRADEMARK OFFICE

UNITED STATES DEPARTMENT OF COMMERCE
United States Patent and Trademark Office
Address: COMMISSIONER FOR PATENTS
P.O. Box 1450
Alexandria, Virginia 22313-1450
www.uspto.gov

APPLICATION NUMBER	FILING or 371(c) DATE	GRP ART UNIT	FIL FEE REC'D	ATTY.DOCKET.NO	TOT CLAIMS	IND CLAIMS
16/043,925	07/24/2018	3764	1720	011640-9081-US02	20	2

CONFIRMATION NO. 6126

FILING RECEIPT

OC000000101563448

23409
MICHAEL BEST & FRIEDRICH LLP (Mke)
100 E WISCONSIN AVENUE
Suite 3300
MILWAUKEE, WI 53202

Date Mailed: 08/09/2018

Receipt is acknowledged of this non-provisional patent application. The application will be taken up for examination in due course. Applicant will be notified as to the results of the examination. Any correspondence concerning the application must include the following identification information: the U.S. APPLICATION NUMBER, FILING DATE, NAME OF APPLICANT, and TITLE OF INVENTION. Fees transmitted by check or draft are subject to collection. Please verify the accuracy of the data presented on this receipt. **If an error is noted on this Filing Receipt, please submit a written request for a Filing Receipt Correction. Please provide a copy of this Filing Receipt with the changes noted thereon. If you received a "Notice to File Missing Parts" for this application, please submit any corrections to this Filing Receipt with your reply to the Notice. When the USPTO processes the reply to the Notice, the USPTO will generate another Filing Receipt incorporating the requested corrections**

Inventor(s)

Nathan Pyles, Lake Mills, WI;

Applicant(s)

JOHNSON HEALTH TECH CO., LTD, Daya District, TAIWAN;

Power of Attorney: The patent practitioners associated with Customer Number 23409

Domestic Priority data as claimed by applicant

This application is a CON of 14/983,171 12/29/2015 PAT 10032227
which claims benefit of 62/098,309 12/30/2014

Foreign Applications for which priority is claimed (You may be eligible to benefit from the **Patent Prosecution Highway** program at the USPTO. Please see http://www.uspto.gov for more information.) - None.
Foreign application information must be provided in an Application Data Sheet in order to constitute a claim to foreign priority. See 37 CFR 1.55 and 1.76.

Permission to Access Application via Priority Document Exchange: Yes

Permission to Access Search Results: Yes

Applicant may provide or rescind an authorization for access using Form PTO/SB/39 or Form PTO/SB/69 as appropriate.

If Required, Foreign Filing License Granted: 08/08/2018

The country code and number of your priority application, to be used for filing abroad under the Paris Convention, is **US 16/043,925**

Projected Publication Date: 11/15/2018

Non-Publication Request: No

Early Publication Request: No

Title

EXERCISE APPARATUS WITH EXERCISE USE VERIFICATION FUNCTION AND VERIFYING METHOD

Preliminary Class

482

Statement under 37 CFR 1.55 or 1.78 for AIA (First Inventor to File) Transition Applications: No

PROTECTING YOUR INVENTION OUTSIDE THE UNITED STATES

Since the rights granted by a U.S. patent extend only throughout the territory of the United States and have no effect in a foreign country, an inventor who wishes patent protection in another country must apply for a patent in a specific country or in regional patent offices. Applicants may wish to consider the filing of an international application under the Patent Cooperation Treaty (PCT). An international (PCT) application generally has the same effect as a regular national patent application in each PCT-member country. The PCT process **simplifies** the filing of patent applications on the same invention in member countries, but **does not result** in a grant of "an international patent" and does not eliminate the need of applicants to file additional documents and fees in countries where patent protection is desired.

Almost every country has its own patent law, and a person desiring a patent in a particular country must make an application for patent in that country in accordance with its particular laws. Since the laws of many countries differ in various respects from the patent law of the United States, applicants are advised to seek guidance from specific foreign countries to ensure that patent rights are not lost prematurely.

Applicants also are advised that in the case of inventions made in the United States, the Director of the USPTO must issue a license before applicants can apply for a patent in a foreign country. The filing of a U.S. patent application serves as a request for a foreign filing license. The application's filing receipt contains further information and guidance as to the status of applicant's license for foreign filing.

Applicants may wish to consult the USPTO booklet, "General Information Concerning Patents" (specifically, the section entitled "Treaties and Foreign Patents") for more information on timeframes and deadlines for filing foreign patent applications. The guide is available either by contacting the USPTO Contact Center at 800-786-9199, or it can be viewed on the USPTO website at http://www.uspto.gov/web/offices/pac/doc/general/index.html.

For information on preventing theft of your intellectual property (patents, trademarks and copyrights), you may wish to consult the U.S. Government website, http://www.stopfakes.gov. Part of a Department of Commerce initiative, this website includes self-help "toolkits" giving innovators guidance on how to protect intellectual property in specific countries such as China, Korea and Mexico. For questions regarding patent enforcement issues, applicants may call the U.S. Government hotline at 1-866-999-HALT (1-866-999-4258).

LICENSE FOR FOREIGN FILING UNDER

Title 35, United States Code, Section 184

Title 37, Code of Federal Regulations, 5.11 & 5.15

GRANTED

The applicant has been granted a license under 35 U.S.C. 184, if the phrase "IF REQUIRED, FOREIGN FILING LICENSE GRANTED" followed by a date appears on this form. Such licenses are issued in all applications where the conditions for issuance of a license have been met, regardless of whether or not a license may be required as set forth in 37 CFR 5.15. The scope and limitations of this license are set forth in 37 CFR 5.15(a) unless an earlier license has been issued under 37 CFR 5.15(b). The license is subject to revocation upon written notification. The date indicated is the effective date of the license, unless an earlier license of similar scope has been granted under 37 CFR 5.13 or 5.14.

This license is to be retained by the licensee and may be used at any time on or after the effective date thereof unless it is revoked. This license is automatically transferred to any related applications(s) filed under 37 CFR 1.53(d). This license is not retroactive.

The grant of a license does not in any way lessen the responsibility of a licensee for the security of the subject matter as imposed by any Government contract or the provisions of existing laws relating to espionage and the national security or the export of technical data. Licensees should apprise themselves of current regulations especially with respect to certain countries, of other agencies, particularly the Office of Defense Trade Controls, Department of State (with respect to Arms, Munitions and Implements of War (22 CFR 121-128)); the Bureau of Industry and Security, Department of Commerce (15 CFR parts 730-774); the Office of Foreign AssetsControl, Department of Treasury (31 CFR Parts 500+) and the Department of Energy.

NOT GRANTED

No license under 35 U.S.C. 184 has been granted at this time, if the phrase "IF REQUIRED, FOREIGN FILING LICENSE GRANTED" DOES NOT appear on this form. Applicant may still petition for a license under 37 CFR 5.12, if a license is desired before the expiration of 6 months from the filing date of the application. If 6 months has lapsed from the filing date of this application and the licensee has not received any indication of a secrecy order under 35 U.S.C. 181, the licensee may foreign file the application pursuant to 37 CFR 5.15(b).

SelectUSA

The United States represents the largest, most dynamic marketplace in the world and is an unparalleled location for business investment, innovation, and commercialization of new technologies. The U.S. offers tremendous resources and advantages for those who invest and manufacture goods here. Through SelectUSA, our nation works to promote and facilitate business investment. SelectUSA provides information assistance to the international investor community; serves as an ombudsman for existing and potential investors; advocates on behalf of U.S. cities, states, and regions competing for global investment; and counsels U.S. economic development organizations on investment attraction best practices. To learn more about why the United States is the best country in the world to develop technology, manufacture products, deliver services, and grow your business, visit http://www.SelectUSA.gov or call +1-202-482-6800.

PATENT APPLICATION FEE DETERMINATION RECORD Substitute for Form PTO-875	Application or Docket Number 16/043,925

APPLICATION AS FILED - PART I

FOR	(Column 1) NUMBER FILED	(Column 2) NUMBER EXTRA	SMALL ENTITY RATE($)	SMALL ENTITY FEE($)	OR	OTHER THAN SMALL ENTITY RATE($)	OTHER THAN SMALL ENTITY FEE($)
BASIC FEE (37 CFR 1.16(a), (b), or (c))	N/A	N/A	N/A			N/A	300
SEARCH FEE (37 CFR 1.16(k), (i), or (m))	N/A	N/A	N/A			N/A	660
EXAMINATION FEE (37 CFR 1.16(o), (p), or (q))	N/A	N/A	N/A			N/A	760
TOTAL CLAIMS (37 CFR 1.16(i))	20 minus 20 =	*			OR	x 100 =	0.00
INDEPENDENT CLAIMS (37 CFR 1.16(h))	2 minus 3 =	*				x 460 =	0.00
APPLICATION SIZE FEE (37 CFR 1.16(s))	If the specification and drawings exceed 100 sheets of paper, the application size fee due is $310 ($155 for small entity) for each additional 50 sheets or fraction thereof. See 35 U.S.C. 41(a)(1)(G) and 37 CFR 1.16(s).						0.00
MULTIPLE DEPENDENT CLAIM PRESENT (37 CFR 1.16(j))							0.00
* If the difference in column 1 is less than zero, enter "0" in column 2.			TOTAL			TOTAL	1720

APPLICATION AS AMENDED - PART II

		(Column 1) CLAIMS REMAINING AFTER AMENDMENT		(Column 2) HIGHEST NUMBER PREVIOUSLY PAID FOR	(Column 3) PRESENT EXTRA	SMALL ENTITY RATE($)	SMALL ENTITY ADDITIONAL FEE($)	OR	OTHER THAN SMALL ENTITY RATE($)	OTHER THAN SMALL ENTITY ADDITIONAL FEE($)
AMENDMENT A	Total (37 CFR 1.16(i))	*	Minus	**	=	x =		OR	x =	
AMENDMENT A	Independent (37 CFR 1.16(h))	*	Minus	***	=	x =		OR	x =	
AMENDMENT A	Application Size Fee (37 CFR 1.16(s))									
AMENDMENT A	FIRST PRESENTATION OF MULTIPLE DEPENDENT CLAIM (37 CFR 1.16(j))							OR		
						TOTAL ADD'L FEE		OR	TOTAL ADD'L FEE	

		(Column 1) CLAIMS REMAINING AFTER AMENDMENT		(Column 2) HIGHEST NUMBER PREVIOUSLY PAID FOR	(Column 3) PRESENT EXTRA	RATE($)	ADDITIONAL FEE($)	OR	RATE($)	ADDITIONAL FEE($)
AMENDMENT B	Total (37 CFR 1.16(i))	*	Minus	**	=	x =		OR	x =	
AMENDMENT B	Independent (37 CFR 1.16(h))	*	Minus	***	=	x =		OR	x =	
AMENDMENT B	Application Size Fee (37 CFR 1.16(s))									
AMENDMENT B	FIRST PRESENTATION OF MULTIPLE DEPENDENT CLAIM (37 CFR 1.16(j))							OR		
						TOTAL ADD'L FEE		OR	TOTAL ADD'L FEE	

* If the entry in column 1 is less than the entry in column 2, write "0" in column 3.
** If the "Highest Number Previously Paid For" IN THIS SPACE is less than 20, enter "20".
*** If the "Highest Number Previously Paid For" IN THIS SPACE is less than 3, enter "3".
The "Highest Number Previously Paid For" (Total or Independent) is the highest found in the appropriate box in column 1.

PTO/AIA/82A (07-13)
Approved for use through 01/31/2018. OMB 0651-0035
U.S. Patent and Trademark Office; U.S. DEPARTMENT OF COMMERCE
Under the Paperwork Reduction Act of 1995, no persons are required to respond to a collection of information unless it displays a valid OMB control number.

TRANSMITTAL FOR POWER OF ATTORNEY TO ONE OR MORE REGISTERED PRACTITIONERS

NOTE: This form is to be submitted with the Power of Attorney by Applicant form (PTO/AIA/82B) to identify the application to which the Power of Attorney is directed, in accordance with 37 CFR 1.5, unless the application number and filing date are identified in the Power of Attorney by Applicant form. If neither form PTO/AIA/82A nor form PTO/AIA82B identifies the application to which the Power of Attorney is directed, the Power of Attorney will not be recognized in the application.

Application Number	
Filing Date	July 24, 2018
First Named Inventor	Nathan Pyles
Title	EXERCISE APPARATUS WITH EXERCISE USE VERIFICATION FUNCTION AND VERIFYING METHOD
Art Unit	
Examiner Name	
Attorney Docket Number	011640-9081-US02

SIGNATURE of Applicant or Patent Practitioner

Signature	/Matthew D. Brown/	Date (Optional)	
Name	Matthew D. Brown	Registration Number	75032
Title (if Applicant is a juristic entity)			
Applicant Name (if Applicant is a juristic entity)			

NOTE: This form must be signed in accordance with 37 CFR 1.33. See 37 CFR 1.4(d) for signature requirements and certifications. If more than one applicant, use multiple forms.

☐ *Total of _____ forms are submitted.

This collection of information is required by 37 CFR 1.131, 1.32, and 1.33. The information is required to obtain or retain a benefit by the public which is to file (and by the USPTO to process) an application. Confidentiality is governed by 35 U.S.C. 122 and 37 CFR 1.11 and 1.14. This collection is estimated to take 3 minutes to complete, including gathering, preparing, and submitting the completed application form to the USPTO. Time will vary depending upon the individual case. Any comments on the amount of time you require to complete this form and/or suggestions for reducing this burden, should be sent to the Chief Information Officer, U.S. Patent and Trademark Office, U.S. Department of Commerce, P.O. Box 1450, Alexandria, VA 22313-1450. DO NOT SEND FEES OR COMPLETED FORMS TO THIS ADDRESS. **SEND TO: Commissioner for Patents, P.O. Box 1450, Alexandria, VA 22313-1450.**

If you need assistance in completing the form, call 1-800-PTO-9199 and select option 2.

Doc Code: PA..
Document Description: Power of Attorney

PTO/AIA/82B (07-13)
Approved for use through 11/30/2014. OMB 0651-0031
U.S. Patent and Trademark Office, U.S. DEPARTMENT OF COMMERCE
Under the Paperwork Reduction Act of 1995, no persons are required to respond to a collection of information unless it displays a valid OMB control number

POWER OF ATTORNEY BY APPLICANT

I hereby revoke all previous powers of attorney given in the application identified in either the attached transmittal letter or the boxes below.

Application Number	Filing Date

(Note: The boxes above may be left blank if information is provided on form PTO/AIA/82A.)

☑ I hereby appoint the Patent Practitioner(s) associated with the following Customer Number as my/our attorney(s) or agent(s), and to transact all business in the United States Patent and Trademark Office connected therewith for the application referenced in the attached transmittal letter (form PTO/AIA/82A) or identified above: 23409

OR

☐ I hereby appoint Practitioner(s) named in the attached list (form PTO/AIA/82C) as my/our attorney(s) or agent(s), and to transact all business in the United States Patent and Trademark Office connected therewith for the patent application referenced in the attached transmittal letter (form PTO/AIA/82A) or identified above. (Note: Complete form PTO/AIA/82C.)

Please recognize or change the correspondence address for the application identified in the attached transmittal letter or the boxes above to:

☑ The address associated with the above-mentioned Customer Number

OR

☐ The address associated with Customer Number:

OR

Firm or Individual Name					
Address					
City		State		Zip	
Country					
Telephone		Email			

I am the Applicant (if the Applicant is a juristic entity, list the Applicant name in the box):

☐ Inventor or Joint Inventor (title not required below)

☐ Legal Representative of a Deceased or Legally Incapacitated Inventor (title not required below)

☑ Assignee or Person to Whom the Inventor is Under an Obligation to Assign (provide signer's title if applicant is a juristic entity)

☐ Person Who Otherwise Shows Sufficient Proprietary Interest (e.g., a petition under 37 CFR 1.46(b)(2) was granted in the application or is concurrently being filed with this document) (provide signer's title if applicant is a juristic entity)

SIGNATURE of Applicant for Patent

The undersigned (whose title is supplied below) is authorized to act on behalf of the applicant (e.g., where the applicant is a juristic entity).

Signature	Liao Hung Mao	Date (Optional)	4/2/15
Name	JOHNSON HEALTH TECH CO., LTD		
Title	Chief R&D Officer of Johnson Health Tech Co., Ltd.		

NOTE: Signature - This form must be signed by the applicant in accordance with 37 CFR 1.33. See 37 CFR 1.4 for signature requirements and certifications. If more than one applicant, use multiple forms.

☐ Total of forms are submitted.

This collection of information is required by 37 CFR 1.131, 1.32, and 1.33. The information is required to obtain or retain a benefit by the public which is to file (and by the USPTO to process) an application. Confidentiality is governed by 35 U.S.C. 122 and 37 CFR 1.11 and 1.14. This collection is estimated to take 3 minutes to complete, including gathering, preparing, and submitting the completed application form to the USPTO. Time will vary depending upon the individual case. Any comments on the amount of time you require to complete this form and/or suggestions for reducing this burden, should be sent to the Chief Information Officer, U.S. Patent and Trademark Office, U.S. Department of Commerce, P.O. Box 1450, Alexandria, VA 22313-1450. DO NOT SEND FEES OR COMPLETED FORMS TO THIS ADDRESS. **SEND TO: Commissioner for Patents, P.O. Box 1450, Alexandria, VA 22313-1450.**

If you need assistance in completing the form, call 1-800-PTO-9199 and select option 2

Electronic Patent Application Fee Transmittal

Application Number:	
Filing Date:	
Title of Invention:	EXERCISE APPARATUS WITH EXERCISE USE VERIFICATION FUNCTION AND VERIFYING METHOD
First Named Inventor/Applicant Name:	Nathan Pyles
Filer:	Matthew D. Brown/Tanya Parent
Attorney Docket Number:	011640-9081-US02

Filed as Large Entity

Filing Fees for Utility under 35 USC 111(a)

Description	Fee Code	Quantity	Amount	Sub-Total in USD($)
Basic Filing:				
UTILITY APPLICATION FILING	1011	1	300	300
UTILITY SEARCH FEE	1111	1	660	660
UTILITY EXAMINATION FEE	1311	1	760	760
Pages:				
Claims:				
Miscellaneous-Filing:				
Petition:				
Patent-Appeals-and-Interference:				

Description	Fee Code	Quantity	Amount	Sub-Total in USD($)
Post-Allowance-and-Post-Issuance:				
Extension-of-Time:				
Miscellaneous:				
		Total in USD ($)		**1720**

Electronic Acknowledgement Receipt	
EFS ID:	33269214
Application Number:	16043925
International Application Number:	
Confirmation Number:	6126
Title of Invention:	EXERCISE APPARATUS WITH EXERCISE USE VERIFICATION FUNCTION AND VERIFYING METHOD
First Named Inventor/Applicant Name:	Nathan Pyles
Customer Number:	23409
Filer:	Matthew D. Brown/Tanya Parent
Filer Authorized By:	Matthew D. Brown
Attorney Docket Number:	011640-9081-US02
Receipt Date:	24-JUL-2018
Filing Date:	
Time Stamp:	16:08:03
Application Type:	Utility under 35 USC 111(a)

Payment information:

Submitted with Payment	yes
Payment Type	CARD
Payment was successfully received in RAM	$1720
RAM confirmation Number	072518INTEFSW16093700
Deposit Account	133080
Authorized User	Tanya Parent
The Director of the USPTO is hereby authorized to charge indicated fees and credit any overpayment as follows: 37 CFR 1.16 (National application filing, search, and examination fees)	

File Listing:

Document Number	Document Description	File Name	File Size(Bytes)/ Message Digest	Multi Part /.zip	Pages (if appl.)
1	Application Data Sheet	23818251_011640-9081-US02_ADS_-_AS_FILED.PDF	1840996 c41cf7b9f437c5a72c9bb80039eecb8598b23add	no	8
Warnings:					
Information:					
2		23817995_011640-9081-US02_Application_and_Drawings_-_as_filed.PDF	711685 266436d3a9866f68b9d0587be486675c8a9898ba	yes	21

Multipart Description/PDF files in .zip description

Document Description	Start	End
Specification	1	11
Claims	12	14
Abstract	15	15
Drawings-only black and white line drawings	16	21

Warnings:					
Information:					
3	Oath or Declaration filed	23818085_011640-9081-US02_Executed_Declarations_-_as_filed.PDF	133319 f987940e5f9b773652a8f2b44cbb4a4bda4b115d	no	1
Warnings:					
Information:					
4	Power of Attorney	23818393_011640-9081-US02_POA_-_as_filed.PDF	346500 55637be4411ca3e1d4c36aaa77f31d5b8935b831	no	2
Warnings:					
Information:					

5	Fee Worksheet (SB06)	fee-info.pdf	35076 d8987e924fc4fd13d7e84a1b8e0a543bcd9609ba	no	2
Warnings:					
Information:					
		Total Files Size (in bytes):	3067576		

This Acknowledgement Receipt evidences receipt on the noted date by the USPTO of the indicated documents, characterized by the applicant, and including page counts, where applicable. It serves as evidence of receipt similar to a Post Card, as described in MPEP 503.

New Applications Under 35 U.S.C. 111
If a new application is being filed and the application includes the necessary components for a filing date (see 37 CFR 1.53(b)-(d) and MPEP 506), a Filing Receipt (37 CFR 1.54) will be issued in due course and the date shown on this Acknowledgement Receipt will establish the filing date of the application.
National Stage of an International Application under 35 U.S.C. 371
If a timely submission to enter the national stage of an international application is compliant with the conditions of 35 U.S.C. 371 and other applicable requirements a Form PCT/DO/EO/903 indicating acceptance of the application as a national stage submission under 35 U.S.C. 371 will be issued in addition to the Filing Receipt, in due course.
New International Application Filed with the USPTO as a Receiving Office
If a new international application is being filed and the international application includes the necessary components for an international filing date (see PCT Article 11 and MPEP 1810), a Notification of the International Application Number and of the International Filing Date (Form PCT/RO/105) will be issued in due course, subject to prescriptions concerning national security, and the date shown on this Acknowledgement Receipt will establish the international filing date of the application.

PTO/AIA/14 (11-15)
Approved for use through 04/30/2017. OMB 0651-0032
U.S. Patent and Trademark Office; U.S. DEPARTMENT OF COMMERCE
Under the Paperwork Reduction Act of 1995, no persons are required to respond to a collection of information unless it contains a valid OMB control number.

Application Data Sheet 37 CFR 1.76	Attorney Docket Number	011640-9081-US02
	Application Number	
Title of Invention	EXERCISE APPARATUS WITH EXERCISE USE VERIFICATION FUNCTION AND VERIFYING METHOD	

The application data sheet is part of the provisional or nonprovisional application for which it is being submitted. The following form contains the bibliographic data arranged in a format specified by the United States Patent and Trademark Office as outlined in 37 CFR 1.76.
This document may be completed electronically and submitted to the Office in electronic format using the Electronic Filing System (EFS) or the document may be printed and included in a paper filed application.

Secrecy Order 37 CFR 5.2:

☐ Portions or all of the application associated with this Application Data Sheet may fall under a Secrecy Order pursuant to 37 CFR 5.2 (Paper filers only. Applications that fall under Secrecy Order may not be filed electronically.)

Inventor Information:

Inventor 1 Remove

Legal Name

Prefix	Given Name	Middle Name	Family Name	Suffix
	Nathan		Pyles	

Residence Information (Select One) ● US Residency Non US Residency Active US Military Service

City	Lake Mills	State/Province	WI	Country of Residence	US

Mailing Address of Inventor:

Address 1	529 College Street		
Address 2			
City	Lake Mills	State/Province	WI
Postal Code	53551	Country i	US

All Inventors Must Be Listed - Additional Inventor Information blocks may be generated within this form by selecting the **Add** button. Add

Correspondence Information:

Enter either Customer Number or complete the Correspondence Information section below.
For further information see 37 CFR 1.33(a).

☐ **An Address is being provided for the correspondence Information of this application.**

Customer Number	23409		
Email Address	mkeipdocket@michaelbest.com	Add Email	Remove Email

Application Information:

Title of the Invention	EXERCISE APPARATUS WITH EXERCISE USE VERIFICATION FUNCTION AND VERIFYING METHOD		
Attorney Docket Number	011640-9081-US02	Small Entity Status Claimed	☐
Application Type	Nonprovisional		
Subject Matter	Utility		
Total Number of Drawing Sheets (if any)	6	Suggested Figure for Publication (if any)	1

Under the Paperwork Reduction Act of 1995, no persons are required to respond to a collection of information unless it contains a valid OMB control number.

Application Data Sheet 37 CFR 1.76	Attorney Docket Number	011640-9081-US02
	Application Number	
Title of Invention	EXERCISE APPARATUS WITH EXERCISE USE VERIFICATION FUNCTION AND VERIFYING METHOD	

Filing By Reference:

Only complete this section when filing an application by reference under 35 U.S.C. 111(c) and 37 CFR 1.57(a). Do not complete this section if application papers including a specification and any drawings are being filed. Any domestic benefit or foreign priority information must be provided in the appropriate section(s) below (i.e., "Domestic Benefit/National Stage Information" and "Foreign Priority Information").

For the purposes of a filing date under 37 CFR 1.53(b), the description and any drawings of the present application are replaced by this reference to the previously filed application, subject to conditions and requirements of 37 CFR 1.57(a).

Application number of the previously filed application	Filing date (YYYY-MM-DD)	Intellectual Property Authority or Country

Publication Information:

☐ Request Early Publication (Fee required at time of Request 37 CFR 1.219)

☐ **Request Not to Publish.** I hereby request that the attached application not be published under 35 U.S.C. 122(b) and certify that the invention disclosed in the attached application **has not and will not** be the subject of an application filed in another country, or under a multilateral international agreement, that requires publication at eighteen months after filing.

Representative Information:

Representative information should be provided for all practitioners having a power of attorney in the application. Providing this information in the Application Data Sheet does not constitute a power of attorney in the application (see 37 CFR 1.32).
Either enter Customer Number or complete the Representative Name section below. If both sections are completed the customer Number will be used for the Representative Information during processing.

Please Select One:	● Customer Number	US Patent Practitioner	○ Limited Recognition (37 CFR 11.9)
Customer Number	23409		

Domestic Benefit/National Stage Information:

This section allows for the applicant to either claim benefit under 35 U.S.C. 119(e), 120, 121, 365(c), or 386(c) or indicate National Stage entry from a PCT application. Providing benefit claim information in the Application Data Sheet constitutes the specific reference required by 35 U.S.C. 119(e) or 120, and 37 CFR 1.78.
When referring to the current application, please leave the "Application Number" field blank.

Prior Application Status: Patented — Remove

Application Number	Continuity Type	Prior Application Number	Filing Date (YYYY-MM-DD)	Patent Number	Issue Date (YYYY-MM-DD)
	Continuation of	14/983171	2015-12-29	10032227	2018-07-24

Application Data Sheet 37 CFR 1.76	Attorney Docket Number	011640-9081-US02
	Application Number	
Title of Invention	EXERCISE APPARATUS WITH EXERCISE USE VERIFICATION FUNCTION AND VERIFYING METHOD	

Prior Application Status	Expired		Remove
Application Number	Continuity Type	Prior Application Number	Filing or 371(c) Date (YYYY-MM-DD)
14/983171	Claims benefit of provisional	62/098309	2014-12-30
Additional Domestic Benefit/National Stage Data may be generated within this form by selecting the **Add** button.			Add

Foreign Priority Information:

This section allows for the applicant to claim priority to a foreign application. Providing this information in the application data sheet constitutes the claim for priority as required by 35 U.S.C. 119(b) and 37 CFR 1.55. When priority is claimed to a foreign application that is eligible for retrieval under the priority document exchange program (PDX)[i] the information will be used by the Office to automatically attempt retrieval pursuant to 37 CFR 1.55(i)(1) and (2). Under the PDX program, applicant bears the ultimate responsibility for ensuring that a copy of the foreign application is received by the Office from the participating foreign intellectual property office, or a certified copy of the foreign priority application is filed, within the time period specified in 37 CFR 1.55(g)(1).

			Remove
Application Number	Country[i]	Filing Date (YYYY-MM-DD)	Access Code[i] (if applicable)
Additional Foreign Priority Data may be generated within this form by selecting the **Add** button.			Add

Statement under 37 CFR 1.55 or 1.78 for AIA (First Inventor to File) Transition Applications

☐ This application (1) claims priority to or the benefit of an application filed before March 16, 2013 and (2) also contains, or contained at any time, a claim to a claimed invention that has an effective filing date on or after March 16, 2013.
NOTE: By providing this statement under 37 CFR 1.55 or 1.78, this application, with a filing date on or after March 16, 2013, will be examined under the first inventor to file provisions of the AIA.

Application Data Sheet 37 CFR 1.76	Attorney Docket Number	011640-9081-US02
	Application Number	
Title of Invention	EXERCISE APPARATUS WITH EXERCISE USE VERIFICATION FUNCTION AND VERIFYING METHOD	

Authorization or Opt-Out of Authorization to Permit Access:

When this Application Data Sheet is properly signed and filed with the application, applicant has provided written authority to permit a participating foreign intellectual property (IP) office access to the instant application-as-filed (see paragraph A in subsection 1 below) and the European Patent Office (EPO) access to any search results from the instant application (see paragraph B in subsection 1 below).

Should applicant choose not to provide an authorization identified in subsection 1 below, applicant **must opt-out** of the authorization by checking the corresponding box A or B or both in subsection 2 below.

NOTE: This section of the Application Data Sheet is **ONLY** reviewed and processed with the **INITIAL** filing of an application. After the initial filing of an application, an Application Data Sheet cannot be used to provide or rescind authorization for access by a foreign IP office(s). Instead, Form PTO/SB/39 or PTO/SB/69 must be used as appropriate.

1. Authorization to Permit Access by a Foreign Intellectual Property Office(s)

A. Priority Document Exchange (PDX) - Unless box A in subsection 2 (opt-out of authorization) is checked, the undersigned hereby **grants the USPTO authority** to provide the European Patent Office (EPO), the Japan Patent Office (JPO), the Korean Intellectual Property Office (KIPO), the State Intellectual Property Office of the People's Republic of China (SIPO), the World Intellectual Property Organization (WIPO), and any other foreign intellectual property office participating with the USPTO in a bilateral or multilateral priority document exchange agreement in which a foreign application claiming priority to the instant patent application is filed, access to: (1) the instant patent application-as-filed and its related bibliographic data, (2) any foreign or domestic application to which priority or benefit is claimed by the instant application and its related bibliographic data, and (3) the date of filing of this Authorization. See 37 CFR 1.14(h)(1).

B. Search Results from U.S. Application to EPO - Unless box B in subsection 2 (opt-out of authorization) is checked, the undersigned hereby **grants the USPTO authority** to provide the EPO access to the bibliographic data and search results from the instant patent application when a European patent application claiming priority to the instant patent application is filed. See 37 CFR 1.14(h)(2).

The applicant is reminded that the EPO's Rule 141(1) EPC (European Patent Convention) requires applicants to submit a copy of search results from the instant application without delay in a European patent application that claims priority to the instant application.

2. Opt-Out of Authorizations to Permit Access by a Foreign Intellectual Property Office(s)

☐ A. Applicant **DOES NOT** authorize the USPTO to permit a participating foreign IP office access to the instant application-as-filed. If this box is checked, the USPTO will not be providing a participating foreign IP office with any documents and information identified in subsection 1A above.

☐ B. Applicant **DOES NOT** authorize the USPTO to transmit to the EPO any search results from the instant patent application. If this box is checked, the USPTO will not be providing the EPO with search results from the instant application.

NOTE: Once the application has published or is otherwise publicly available, the USPTO may provide access to the application in accordance with 37 CFR 1.14.

Under the Paperwork Reduction Act of 1995, no persons are required to respond to a collection of information unless it contains a valid OMB control number.

Application Data Sheet 37 CFR 1.76	Attorney Docket Number	011640-9081-US02
	Application Number	
Title of Invention	EXERCISE APPARATUS WITH EXERCISE USE VERIFICATION FUNCTION AND VERIFYING METHOD	

Applicant Information:

Providing assignment information in this section does not substitute for compliance with any requirement of part 3 of Title 37 of CFR to have an assignment recorded by the Office.

Applicant 1 Remove

If the applicant is the inventor (or the remaining joint inventor or inventors under 37 CFR 1.45), this section should not be completed. The information to be provided in this section is the name and address of the legal representative who is the applicant under 37 CFR 1.43; or the name and address of the assignee, person to whom the inventor is under an obligation to assign the invention, or person who otherwise shows sufficient proprietary interest in the matter who is the applicant under 37 CFR 1.46. If the applicant is an applicant under 37 CFR 1.46 (assignee, person to whom the inventor is obligated to assign, or person who otherwise shows sufficient proprietary interest) together with one or more joint inventors, then the joint inventor or inventors who are also the applicant should be identified in this section.

Clear

● Assignee	Legal Representative under 35 U.S.C. 117	Joint Inventor
Person to whom the inventor is obligated to assign.	Person who shows sufficient proprietary interest	

If applicant is the legal representative, indicate the authority to file the patent application, the inventor is:

Name of the Deceased or Legally Incapacitated Inventor:

If the Applicant is an Organization check here. ☒

Organization Name	JOHNSON HEALTH TECH CO., LTD		
Mailing Address Information For Applicant:			
Address 1	No. 999, Sec. 2, Dongda Rd.		
Address 2			
City	Daya District, Taichung City 428	**State/Province**	
Country	TW	Postal Code	
Phone Number		Fax Number	
Email Address			

Additional Applicant Data may be generated within this form by selecting the Add button. Add

Assignee Information including Non-Applicant Assignee Information:

Providing assignment information in this section does not substitute for compliance with any requirement of part 3 of Title 37 of CFR to have an assignment recorded by the Office.

Under the Paperwork Reduction Act of 1995, no persons are required to respond to a collection of information unless it contains a valid OMB control number.

Application Data Sheet 37 CFR 1.76	Attorney Docket Number	011640-9081-US02
	Application Number	
Title of Invention	EXERCISE APPARATUS WITH EXERCISE USE VERIFICATION FUNCTION AND VERIFYING METHOD	

Assignee 1

Complete this section if assignee information, including non-applicant assignee information, is desired to be included on the patent application publication. An assignee-applicant identified in the "Applicant Information" section will appear on the patent application publication as an applicant. For an assignee-applicant, complete this section only if identification as an assignee is also desired on the patent application publication.

Remove

If the Assignee or Non-Applicant Assignee is an Organization check here. ☐

Prefix	**Given Name**	Middle Name	**Family Name**	Suffix

Mailing Address Information For Assignee including Non-Applicant Assignee:

Address 1			
Address 2			
City		**State/Province**	
Country i		Postal Code	
Phone Number		Fax Number	
Email Address			

Additional Assignee or Non-Applicant Assignee Data may be generated within this form by selecting the Add button. Add

Signature:

Remove

NOTE: This Application Data Sheet must be signed in accordance with 37 CFR 1.33(b). **However, if this Application Data Sheet is submitted with the INITIAL filing of the application and either box A or B is not checked in subsection 2 of the "Authorization or Opt-Out of Authorization to Permit Access" section, then this form must also be signed in accordance with 37 CFR 1.14(c).**

This Application Data Sheet **must** be signed by a patent practitioner if one or more of the applicants is a **juristic entity** (e.g., corporation or association). If the applicant is two or more joint inventors, this form must be signed by a patent practitioner, **all** joint inventors who are the applicant, or one or more joint inventor-applicants who have been given power of attorney (e.g., see USPTO Form PTO/AIA/81) on behalf of **all** joint inventor-applicants.

See 37 CFR 1.4(d) for the manner of making signatures and certifications.

Signature	/Matthew D. Brown/			Date (YYYY-MM-DD)	2018-07-24
First Name	Matthew	Last Name	Brown	Registration Number	75032

Additional Signature may be generated within this form by selecting the Add button. Add

Application Data Sheet 37 CFR 1.76	Attorney Docket Number	011640-9081-US02
	Application Number	
Title of Invention	EXERCISE APPARATUS WITH EXERCISE USE VERIFICATION FUNCTION AND VERIFYING METHOD	

This collection of information is required by 37 CFR 1.76. The information is required to obtain or retain a benefit by the public which is to file (and by the USPTO to process) an application. Confidentiality is governed by 35 U.S.C. 122 and 37 CFR 1.14. This collection is estimated to take 23 minutes to complete, including gathering, preparing, and submitting the completed application data sheet form to the USPTO. Time will vary depending upon the individual case. Any comments on the amount of time you require to complete this form and/or suggestions for reducing this burden, should be sent to the Chief Information Officer, U.S. Patent and Trademark Office, U.S. Department of Commerce, P.O. Box 1450, Alexandria, VA 22313-1450. DO NOT SEND FEES OR COMPLETED FORMS TO THIS ADDRESS. **SEND TO: Commissioner for Patents, P.O. Box 1450, Alexandria, VA 22313-1450.**

Privacy Act Statement

The Privacy Act of 1974 (P.L. 93-579) requires that you be given certain information in connection with your submission of the attached form related to a patent application or patent. Accordingly, pursuant to the requirements of the Act, please be advised that: (1) the general authority for the collection of this information is 35 U.S.C. 2(b)(2); (2) furnishing of the information solicited is voluntary; and (3) the principal purpose for which the information is used by the U.S. Patent and Trademark Office is to process and/or examine your submission related to a patent application or patent. If you do not furnish the requested information, the U.S. Patent and Trademark Office may not be able to process and/or examine your submission, which may result in termination of proceedings or abandonment of the application or expiration of the patent.

The information provided by you in this form will be subject to the following routine uses:

1 The information on this form will be treated confidentially to the extent allowed under the Freedom of Information Act (5 U.S.C. 552) and the Privacy Act (5 U.S.C. 552a). Records from this system of records may be disclosed to the Department of Justice to determine whether the Freedom of Information Act requires disclosure of these records.

2. A record from this system of records may be disclosed, as a routine use, in the course of presenting evidence to a court, magistrate, or administrative tribunal, including disclosures to opposing counsel in the course of settlement negotiations.

3 A record in this system of records may be disclosed, as a routine use, to a Member of Congress submitting a request involving an individual, to whom the record pertains, when the individual has requested assistance from the Member with respect to the subject matter of the record.

4. A record in this system of records may be disclosed, as a routine use, to a contractor of the Agency having need for the information in order to perform a contract. Recipients of information shall be required to comply with the requirements of the Privacy Act of 1974, as amended, pursuant to 5 U.S.C. 552a(m).

5. A record related to an International Application filed under the Patent Cooperation Treaty in this system of records may be disclosed, as a routine use, to the International Bureau of the World Intellectual Property Organization, pursuant to the Patent CooperationTreaty.

6. A record in this system of records may be disclosed, as a routine use, to another federal agency for purposes of National Security review (35 U.S.C. 181) and for review pursuant to the Atomic Energy Act (42 U.S.C. 218(c)).

7. A record from this system of records may be disclosed, as a routine use, to the Administrator, General Services, or his/her designee, during an inspection of records conducted by GSA as part of that agency's responsibility to recommend improvements in records management practices and programs, under authority of 44 U.S.C. 2904 and 2906. Such disclosure shall be made in accordance with the GSA regulations governing inspection of records for this purpose, and any other relevant (i.e., GSA or Commerce) directive. Such disclosure shall not be used to make determinations about individuals.

8. A record from this system of records may be disclosed, as a routine use, to the public after either publication of the application pursuant to 35 U.S.C. 122(b) or issuance of a patent pursuant to 35 U.S.C. 151. Further, a record may be disclosed, subject to the limitations of 37 CFR 1.14, as a routine use, to the public if the record was filed in an application which became abandoned or in which the proceedings were terminated and which application is referenced by either a published application, an application open to public inspections or an issued patent.

9. A record from this system of records may be disclosed, as a routine use, to a Federal, State, or local law enforcement agency, if the USPTO becomes aware of a violation or potential violation of law or regulation.

EXERCISE APPARATUS WITH EXERCISE USE VERIFICATION FUNCTION AND VERIFYING METHOD

CROSS-REFERENCE TO RELATED APPLICATIONS

[0001] This application is a continuation of U.S. Application No. 14/983,171, filed on December 29, 2015, now U.S. Patent No. 10,032,227, which claims priority to U.S. Provisional Patent Application No. 62/098,309, filed December 30, 2014, of which the entire contents of both are incorporated herein by reference.

BACKGROUND

[0002] The present disclosure relates to an exercise apparatus. More particularly, the present disclosure relates to an exercise apparatus with exercise use verification function and verifying method.

[0003] Some insurance companies often give their customers a choice of paying more or proving that they regularly exercise. Clearly, if the customers demonstrate measurable healthy habits, including proof of regular exercise, the insurance companies can often pay less money toward insurance payouts, and can then pass a portion of these savings onto their customers. Under this arrangement, the insurance companies would encourage their customers to regularly exercise and keep healthy. In this situation, the customers stay healthy, there are fewer expensive insurance payouts due to poor health, and it is more profitable for the insurance companies. In order to demonstrate beneficial exercise habits of an insurance customer to their insurance company, a conventional exercise apparatus with an exercise use data reporting function (such as the embodiments disclosed in U.S. Pat. No. 8,287,434 and U.S. Pat. No. 6,638,198) comes to the world.

[0004] U.S. Pat. No. 8,287,434 and U.S. Pat. No. 6,638,198 both disclose a conventional exercise apparatus that can provide exercise use data therefrom for a user. The exercise use data would represent an exercise amount of the user. The user could demonstrate his (or her) exercise habit and exercise use to their insurance company, via this data. The conventional exercise apparatus comprises an operating member and a controller associated with the operating

member. When the user drives the operating member to operate the exercise apparatus, the controller associated with the operating member creates exercise use data. Thereafter, the controller records the exercise use data and reports the exercise use data to the user. The user could use this exercise use data to demonstrate his (or her) exercise habit. Provided with this exercise use data, the user's insurance company may then offer discounts to the user.

[0005] Currently, exercise use data is restricted to exercise apparatus with a user-driven operating member, which is driven by the user to operate the exercise apparatus. Examples of a user-driven operating member of an exercise apparatus would be a stationary bike operating member (a crank shaft, driven by the bike pedals) or an elliptical trainer operating member (a crank shaft, driven by the elliptical pedals and linkage system). Currently, if the controller is set to record exercise use data on an exercise apparatus with motor-driven operating member, such as a treadmill operating member (a motor driven running belt) or a stairclimber operating member (a motor driven staircase), it would be easy to falsify exercise use data on the exercise apparatus. The user could just turn on a motor-driven operating member of an exercise apparatus, without actually using the exercise apparatus, and let a controller associated with the operating member create exercise use data. A specific example would be a user turning on a motorized treadmill, causing the running belt to move, and letting the treadmill run until the treadmill controller had recorded a large distance traveled by the running belt. The user would not need to be present on the treadmill, and yet the treadmill controller would record exercise use data. As a result, the controller thereof would record the exercise use data which is faked. To avoid this, manufactures have, to date, reported only exercise use data associated with user-driven operating members to insurance companies, because the faked exercise use data shouldn't represent the exercise habit or amount of user exercise to the insurance companies. In other words, exercise apparatus with motor-driven operating members currently on the market wouldn't help the user to demonstrate his (or her) exercise habits to an insurance company. Therefore, if one buys an exercise apparatus with a motor-driven operating member, he (or she) couldn't demonstrate his (or her) exercise habits via the exercise apparatus, because there is a question as to the validity of this exercise use data.

SUMMARY

[0006] The present invention has arisen to mitigate and/or obviate the disadvantages of the conventional exercise apparatus. Further benefits and advantages of the present invention will become apparent after a careful reading of the detailed description with appropriate reference to the accompanying drawings.

[0007] The present invention involves an exercise apparatus with exercise use verification function and a verifying method. Generally speaking, the exercise apparatus with exercise use verification function is to verify an exercise use thereof, and the verifying method is to verify an exercise use of an exercise apparatus. Therefore, for example, a user could demonstrate his (or her) exercise habit to their insurance company.

[0008] The invention provides, in one aspect, an exercise apparatus that includes a base, an operating unit movable relative to the base, a motor coupled to the operating unit, a sensor operable to detect engagement of a user with the operating unit, and a controller in communication with the operating unit and the sensor. A communication interface is in communication with the controller, wherein the controller is configured to generate a non-validated exercise use data in response to movement of the operating unit relative to the base and the sensor does not detect engagement of the user with the operating unit, wherein the controller is further configured to generate a validated exercise use data in response to movement of the operating unit relative to the base and the sensor does detect engagement of the user with the operating unit, and wherein the controller transmits the validated exercise use data to the communication interface.

[0009] The invention provides, in another aspect, a method of verifying the use of an exercise apparatus that includes operating a motor-driven operating member, generating a non-validated exercise use data in response to operating the motor-driven operating member, detecting engagement of the motor-driven operating member by a user, recording the non-validated exercise use data as validated exercise use data for a portion of time in response to detecting engagement of the motor-driven operating member by the user, and reporting the validated exercise use data to a communication interface.

[0010] The invention provides, in yet another aspect, a motorized treadmill that includes a base, an endless belt movable relative to the base, a motor operably coupled to the endless belt, a sensor configured to detect engagement of the endless belt by a user, and a controller configured to record validated exercise use data in response to the sensor detecting of engagement of the endless belt by the user, the validated exercise data including an amount of user exercise time, the amount of user exercise time being generated by an amount of time that the sensor detects engagement of the endless belt by the user.

[0011] The reader is advised that this summary is not meant to be exhaustive. Further features, aspects, and advantages of the present invention will become better understood with reference to the following description, accompanying drawings and appended claims.

[0012] Further benefits and advantages of the present invention will become apparent after a careful reading of the detailed description with appropriate reference to the accompanying drawings.

BRIEF DESCRIPTION OF THE DRAWINGS

[0013] Fig. 1 is a perspective view of an exercise device embodying the present invention.

[0014] Fig. 2 is a schematic drawing of the exercise device and a data storage embodying the present invention.

[0015] Fig. 3 is a schematic drawing of a motor-driven operating member and a power source embodying the present invention.

[0016] Fig. 4 is a side view of a second embodiment of the present invention.

[0017] Fig. 5 is a perspective view of a third embodiment of the present invention.

[0018] Fig. 6 is a flow diagram of an embodiment of an exercise use verification application that verifies use of the exercise device.

DETAILED DESCRIPTION

[0019] In the following detailed description, for purposes of explanation, numerous specific details are set forth in order to provide a thorough understanding of the disclosed embodiments. It will be apparent, however, that one or more embodiments may be practiced without these specific details. In other instances, well-known structures and devices are schematically depicted in order to simplify the drawings.

[0020] Figs. 1-2 illustrate an exercise apparatus 10 with an exercise use verification function. The exercise apparatus 10 comprises a base 8, a motor-driven operating member 20, a current sensor 30, a controller 40 associated with the motor-driven operating member 20 and the current sensor 30, and a communication interface 50 associated with the controller 40. Examples of an exercise apparatus can include a motorized treadmill (the embodiment of the present invention as shown in Fig. 1), a motorized stairclimber, or any other suitable types of motorized exercise equipment. In the embodiment illustrated in Fig. 1, the motor-driven operating member 20 includes an endless belt. It should be appreciated that the endless belt is provided for purposes of illustration, and the motor-driven operating member can be any suitable operating unit or operating member that a user of the exercise apparatus engages, contacts, or otherwise uses to perform the exercise. As an additional, non-limiting example of the motor-driven operating member, the exercise apparatus 10 can be a motorized stairclimber with the motor-driven operating member being a moving staircase.

[0021] Referring to Figs. 2-3, the motor-driven operating member 20 has an operating unit 21 (e.g., an endless belt, a staircase, etc.) and a motor 22. The motor 22 is structurally coupled to the operating unit 21 at one portion thereof. The motor 22 is electrically connected to a power source PS, such as an AC power socket, via a wire. The power source PS transmits an input current into the motor 22 via the wire so as to power the motor 22 to drive the operating unit 21. The current sensor 30 is associated with the motor 22 by being positioned between the motor 22 and the power source PS. The current sensor 30 is configured to detect the input current in the wire, and generate a current signal proportional to the input current (the detail of the current sensor, such as how to detect electrical current in a wire or generate a signal, is well-known and will not be further described here).

[0022] The controller 40 is operable to receive data according to operation of the motor-driven operating member 20, and further operable to process the data. In the illustrated embodiment, the controller 40 includes a microcontroller unit, at least one electronic circuit, and at least one circuit board. The microcontroller unit and the electronic circuit are assembled on the circuit board so as to define a controller assembly. In other embodiments, the controller 40 can be a computer processing system that includes a hardware assembly, a software assembly, and/or a firmware assembly. The hardware assembly of the controller 40 can include a processor that is in communication with a computer readable storage medium. The computer readable storage medium can be any suitable data storage device that can store data that can be thereafter accessed and read by the controller (or components thereof) or a separate computing system. Examples of computer readable storage medium can include, but is not limited to, read-only memory, CD-ROM, CD-R, CD-RW, DVD, DVD-RW, magnetic tapes, Universal Serial Bus (USB) flash drive, or any other optical or other suitable data storage device.

[0023] As illustrated in FIG. 2, the controller 40 is in communication with the motor-driven operating member 20 and the current sensor 30. In addition, the current sensor 30 is in communication with the motor-driven operating member 20. The controller 40 is in communication with the communication interface 50. The communication between components can be by any suitable wired connection (e.g., a bus wire, etc.), any suitable wireless connection (e.g., Bluetooth, Wi-Fi, etc.), or a combination of suitable wired and wireless connections. The communication interface 50 facilitates transmission or communication of exercise use data (validated and/or unvalidated) from the exercise apparatus 10 for distribution. The communication interface 50 is discussed in additional detail below.

[0024] In operation, the current signal is transmitted from the current sensor 30 to the controller 40. Consequently, the controller 40 can continue to monitor a state of the input current. Specially, if a user gets on the operating unit 21 during operation of the motor-driven operating member 20 (e.g., the endless belt illustrated in Fig. 1), the motor 22 will draw more current because the operating unit 21 undertakes the user footfall and needs more driving power from the motor 22 to keep regularly operating. Therefore, the current sensor 30 will detect whether or not the user is engaging the motor-driven operating member 20 by detecting a current change of the input current that is caused by the user footfall. Thereafter, the current sensor 30 transmits the

current signal proportional to the input current to the controller 40, so that the controller 40 can further determine, via the current signal, whether or not the user is engaging (or continues to engage, or ceases to engage) the motor-driven operating member 20.

[0025] Referring back to the first embodiment of Figs. 1-3, if the operating unit 21 is driven by the motor 22, the controller 40 creates a non-validated exercise use data according to operation of the motor-driven operating member 20. Simultaneously, the current sensor 30 detects the input current in the wire to the motor 22 so as to detect whether or not a user is engaging the motor-driven operating member 20, and generates a current signal proportional to the input current. Then, the current signal is transmitted from the current sensor 30 to the controller 40. In order to determine whether or not a user is engaging the motor-driven operating member, the controller 40 analyzes fluctuations in the input current. Fluctuations occur when a user is using the exercise apparatus 10 due to the user's foot contacting the operating unit 21 and briefly causing a change in resistance to movement of the operating unit 21. This change in resistance is met by a change in input current to the motor 22. The controller 40 can be programmed to analyze the amplitude and frequency of any fluctuations in order to determine whether or not a user is using the exercise apparatus. Such an analysis can be tailored to distinguish user-induced fluctuations from fluctuations caused by other factors, such as belt or roller imbalance. The user-induced fluctuations sensed when a user is using the exercise apparatus 10 would not be sensed when a user is not using the exercise apparatus 10.

[0026] For example, the controller 40 can be programmed to detect that a user is engaging the operating member 20 if fluctuations of the input current are at least 5% and are at a frequency of between 80/minute and 250/minute. The parameters will vary depending on the exercise apparatus, and can be chosen to distinguish from normal fluctuations in the motor, transmission, and belt.

[0027] Although a sensor that is configured to detect whether or not a user is engagement with the motor-driven operating member is illustrated in the embodiment of FIGS. 1-3 as the current sensor 30, in other embodiments other sensors can be implemented. For example, in other embodiments the sensor for detecting user engagement of the motor-driven operating member can be an optical sensor 60 that senses a level of IR radiation (see Fig. 4), a pressure

sensor 70 that senses (or detect) an amount of pressure on the running belt (see Fig. 5), a speed sensor that senses fluctuations in speed of the operating unit, a thermal sensor that senses a level of heat (i.e., from a human body) on or near the motor-driven operating member, or any other suitable sensor. In each of these cases, the measured parameter can be compared to a default parameter that exists when a user is not engaging the motor-driven operating member. The detail of these sensing devices is well-known and will not be further described here.

[0028] If the user is not detected as engaging the motor-driven operating member 20, the controller 40 keeps creating non-validated exercise use data and monitoring the state of the input current in the wire to the motor 22. In contrast, if the user is detected as engaging the motor-driven operating member 20, the controller 40 records the non-validated exercise use data as validated exercise use data. Finally, the validated exercise use data is reported from the controller 40 to the communication interface 50. The validated exercise use data can further include an amount of time (or portion of time or accrued amount of time) the user is detected as engaging the motor-driven operating member 20 (i.e., the amount of time the user spends exercising), which can be based on a timer or other timing device that measures the amount of time the user is detected as engaging the motor-driven operating member 20. In addition, or alternatively, the validated exercise use data can include a distance traveled (or an equivalent distance traveled) by the user while the user is detected as engaging the motor-driven operating member 20 (i.e., the distance traveled by the user while exercising).

[0029] The communication interface 50 can communicate the exercise use data (e.g., validated and/or unvalidated exercise use data) to an interested third party (e.g., a physician, a medical provider, etc.), a demander (e.g., an insurance company, an insurance provider, etc.), and/or the user. For example, the communication interface 50 can be a display device, such as a screen of a console positioned on a portion of the exercise apparatus 10. The screen can be configured to display the validated exercise use data to the user. The user is then free to view and/or document (e.g., write down, etc.) the validated exercise use data so as to present it to the interested third party and/or demander. In this way, the validated exercise use data is substantially shown as a multimedia content, such as a media image and/or a sound. As another example, the communication interface 50 is configured to output the exercise use data to an outside storage device such as a flash drive, a disk rewriter, or a website storage device by a

communication link. The communication link can be a port (or plug) that is configured to receive a computer readable storage medium (e.g., a USB flash drive, etc.). The validated exercise use data is substantially packaged in a computer file that can be accessed or processed to show the validated exercise use data as a multimedia content, such as the media image and/or the sound. Additionally or otherwise, the communication link can be a wired connection (e.g., a USB connection, a CAT-5 connection, etc.) or a wireless connection (e.g., an Internet interface, Wi-Fi, Bluetooth, etc.). In this way, the port (or plug) is replaced with (or can also further include) a wired and/or wireless communication module, and the outside storage device has a further corresponding wired and/or wireless communication module. The validated exercise use data can then be transmitted from the communication module of the exercise apparatus 10 to the communication module of the outside storage device (by the wired and/or wireless connection). In the illustrated embodiment shown in Figs. 1-3, the communication interface 50 is illustrated as an Internet interface, such as a Wi-Fi internet module or an internet port. It should be appreciated that the outside storage device can be a web or Internet based storage device, such as a web based database. This allows for the communication of validated exercise use data to the interested third party or demander by via wireless internet connection or wired internet connection. Therefore, the user does not need to manually present the validated exercise use data to the interested third party or demander. In other examples of embodiments, the communication interface 50 can be programmed or incorporated into the controller 40 such that the controller 40 performs the functions associated with the communication interface 50 as described herein.

[0030] FIG. 6 illustrates an example of an exercise use verification application 100 that uses data acquired from the motor-driven operating member 20 to monitor and verify that a user is using the exercise equipment. The application 100 can be a module that operates on (or is associated with) the controller 40. The application 100 may be distributed and stored on the controller 40, and/or can be accessible from a remote location, such as through a web portal, web site, local area network, or generally over the Internet. The exercise use verification application 100 includes a series of processing instructions or steps that are depicted in flow diagram form.

[0031] Referring to FIG. 6, the process begins at step 104, where the exercise apparatus 10 is powered on and in an operational state. The application 100 is initiated, for example, by an

interlock with the motor 22 such that when the motor 22 is in an operational state, the application 100 is also operational.

[0032] Next, at step 108 the controller 40 receives data from the sensor configured to detect user engagement with the exercise apparatus 10. For example, the controller 40 receives data from the current sensor 30. In other embodiments, the controller 40 receives data from the optical sensor 60, the pressure sensor 70, the speed sensor, the thermal sensor, or the other suitable sensor.

[0033] Proceeding to step 112, the controller 40 analyzes the data from the sensor to detect whether a user is actively engaging the motor-driven operating member 20. For example, the controller 40 can analyze fluctuations in the input current from the current sensor 30, as described above. In addition, or alternatively, the controller 40 can compare the received data from the sensor to a known (or default or standard) data parameter that is indicative of a user not engaging the motor-driven operating member 20. The known data parameter can be preprogrammed into the controller, or recognized during operational use (e.g., operation of the motor-driven operating member 20 without a user). If the analysis results in a "no," there is no user detected that is actively engaging the motor-driven operating member 20, the process proceeds to step 116. If the analysis results in a "yes," there is a user detected that is actively engaging the motor-driven operating member 20, the process proceeds to step 128, the details of which are later described.

[0034] At step 116, the process generates non-validated exercise use data. This data can be locally stored, or communicated to an interested third party, a demander, and/or the user as discussed above. Next, at step 120, the process detects whether the motor 22 (or motor-driven operating member 20) continues to operate. If the process detects that "yes" the motor 22 continues to operate, the process returns to step 112 and repeats. If the process detects that "no" the motor 22 does not continue to operate, which is indicative of the exercise apparatus 10 no longer operating, the process terminates at step 124.

[0035] At step 128, the process generates validated exercise use data. More specifically, the controller can record (or otherwise identify) the non-validated exercise use data as validated exercise use data. The validated exercise use data can be locally stored or communicated to an

interested third party, a demander, and/or the user as discussed above. The process returns to step 112 and repeats.

[0036] It will be apparent to those skilled in the art that various modifications and variations can be made to the structure of the present invention without departing from the scope or spirit of the invention. In view of the foregoing, it is intended that the present invention cover modifications and variations of this invention provided they fall within the scope of the following claims and their equivalents.

CLAIMS

What is claimed is:

1. An exercise apparatus comprising:

a motor;

an operating member driven by the motor;

a sensor operable to detect engagement of a user with the operating member;

a controller in communication with the operating member and the sensor; and

a communication interface in communication with the controller,

wherein the controller is configured to generate exercise use data in response to movement of the operating member and the sensor detecting engagement of the user with the operating unit, and

wherein the controller transmits the exercise use data to the communication interface.

2. The exercise apparatus of claim 1, wherein the exercise use data includes a distance traveled by the user while the sensor detects engagement of the user with the operating member.

3. The exercise apparatus of claim 1, wherein the exercise use data includes a time spent exercising while the sensor detects engagement of the user with the operating member.

4. The exercise apparatus of claim 1, wherein the sensor includes a pressure sensor, and wherein the controller is configured to analyze data from the pressure sensor to ascertain whether the user is engaging the operating member.

5. The exercise apparatus of claim 4, wherein the operating member includes an endless belt that defines a user contact surface, and the pressure sensor is configured to detect an amount of pressure on the user contact surface.

6. The exercise apparatus of claim 1, wherein the controller compares data from the sensor to a data parameter that is indicative of a user not engaging the operating member in order to detect whether or not the user is engaging the operating member.

7. The method of claim 6, wherein the known data parameter is recognized during operational use.

8. The exercise apparatus of claim 1, wherein the sensor includes a current sensor operably connected to the motor, and wherein the current sensor is configured to detect an input current into the motor during operation of the operating member, and wherein the controller is operable to analyze the input current to detect engagement of the user with the operating unit.

9. The exercise apparatus of claim 8, wherein the controller is configured to analyze a fluctuation in the input current.

10. The exercise apparatus of claim 1, wherein the communication interface is an internet interface.

11. The exercise apparatus of claim 10, wherein the internet interface is configured to transmit the exercise use data to a website storage device.

12. The exercise apparatus of claim 11, wherein the website storage device is a web based database.

13. The exercise apparatus of claim 11, wherein the exercise use data is transmitted to the website storage device via a communication link.

14. The exercise apparatus of claim 1, wherein the communication interface is a display device for directly showing the exercise use data to the user.

15. The exercise apparatus of claim 1, wherein the communication interface communicates the exercise use data to a third party.

16. A method of verifying the use of an exercise apparatus comprising:

operating a motor-driven operating member;

detecting engagement of the motor-driven operating member by a user;

generating exercise use data for a portion of time in response to detecting engagement of the motor-driven operating member by the user; and

transmitting the exercise use data to a communication interface.

17. The method of claim 16, wherein the detecting step includes sensing pressure on the motor-driven operating member.

18. The method of claim 16, wherein the detecting step includes sensing an input current drawn by the motor.

19. The method of claim 16, further comprising communicating the exercise use data to a third party.

20. The method of claim 16, wherein the detecting step comprises comparing data sensed by a sensor to a data parameter that is indicative of a user not engaging the operating member.

ABSTRACT

An exercise apparatus includes a motor, an operating member driven by the motor, a sensor operable to detect engagement of a user with the operating member, a controller in communication with the operating member and the sensor, and a communication interface in communication with the controller. The controller is configured to generate exercise use data in response to movement of the operating member and the sensor detecting engagement of the user with the operating unit, and the controller transmits the exercise use data to the communication interface.

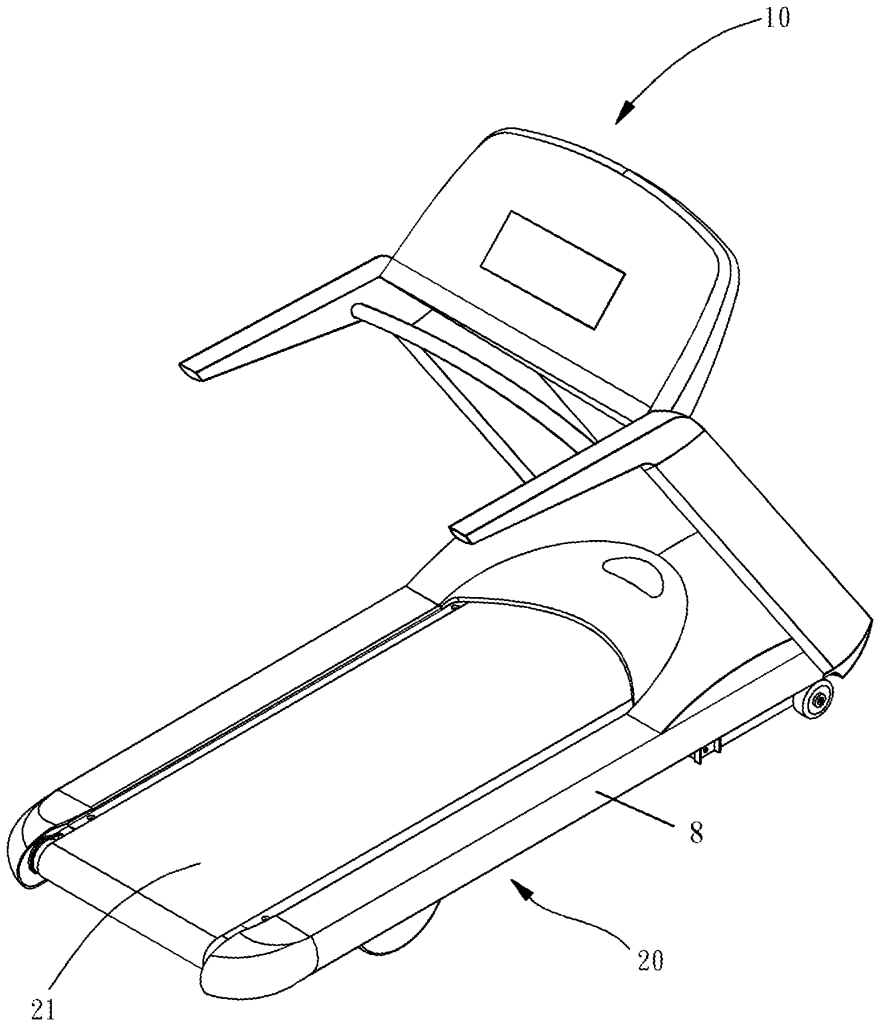

FIG. 1

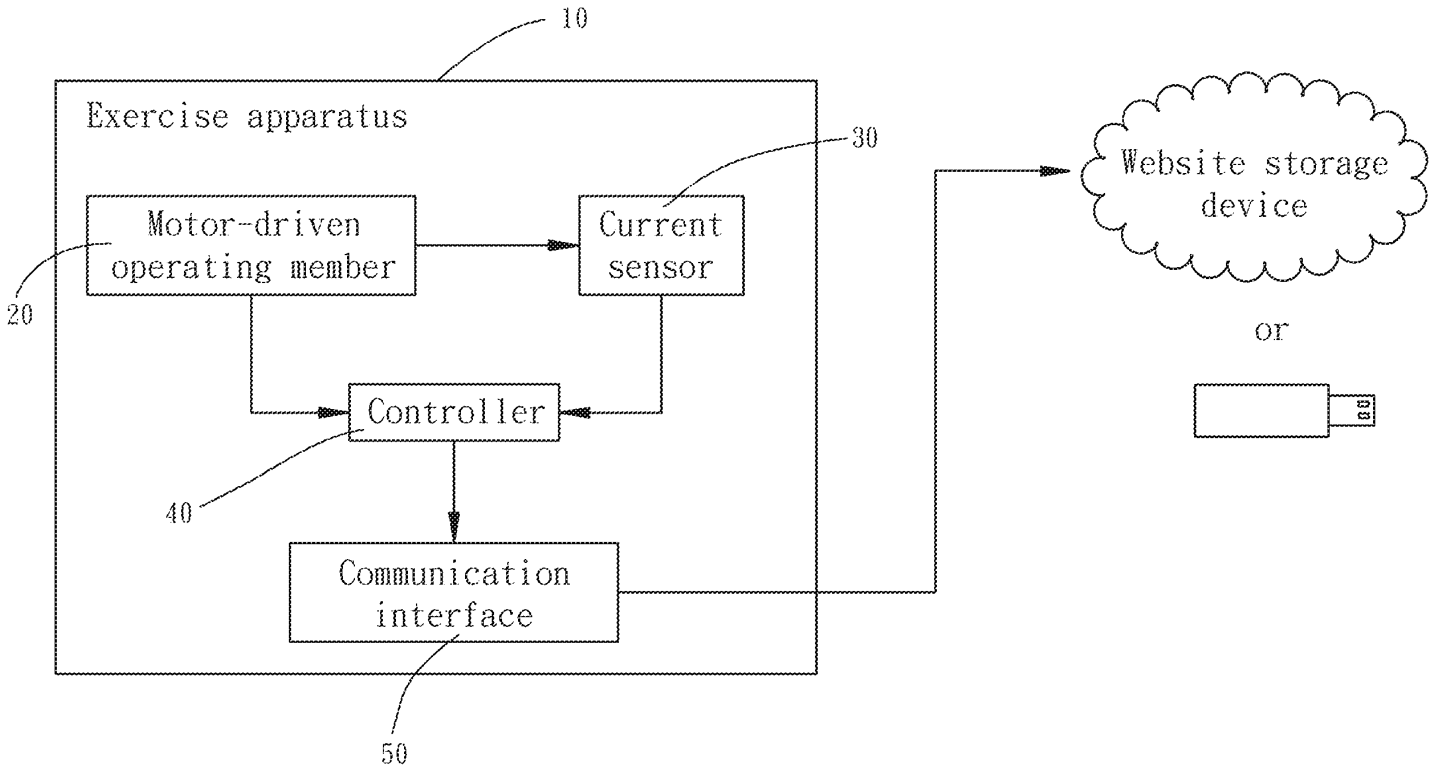
10
Exercise apparatus
Motor-driven operating member
20
Current sensor
30
Controller
40
Communication interface
50
Website storage device
or

FIG. 2

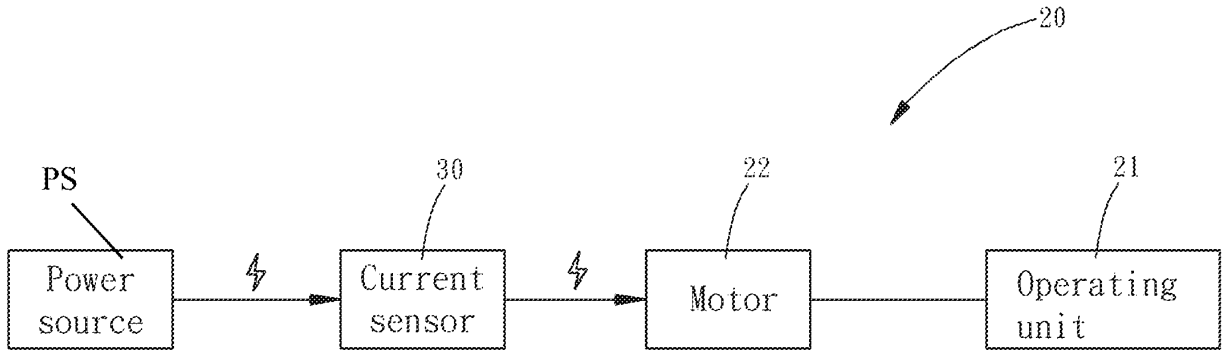
20
PS
30
22
21
Power source
Current sensor
Motor
Operating unit

FIG. 3

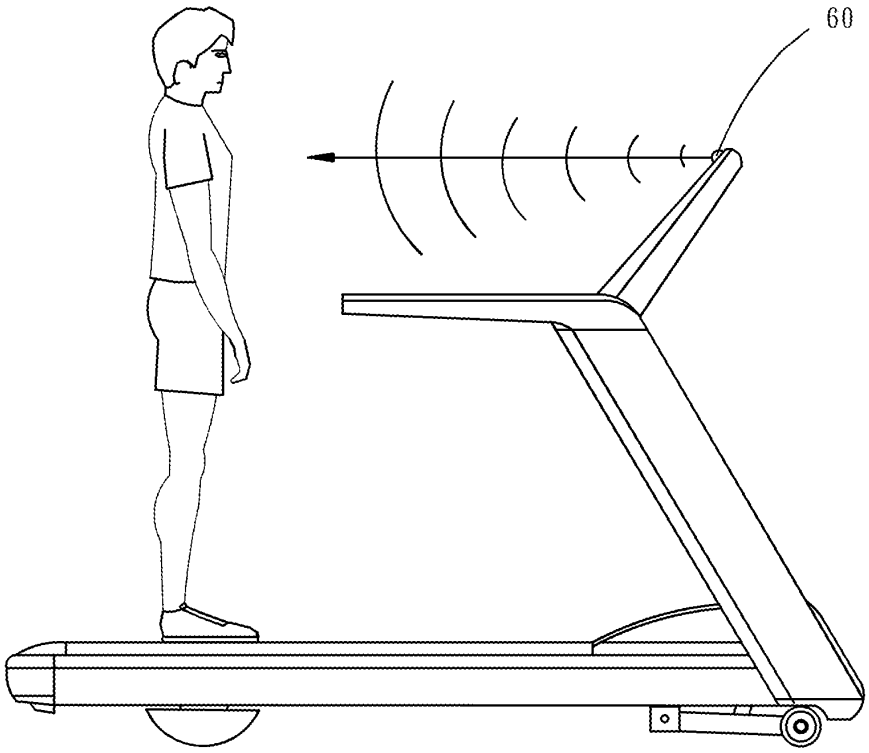

FIG. 4

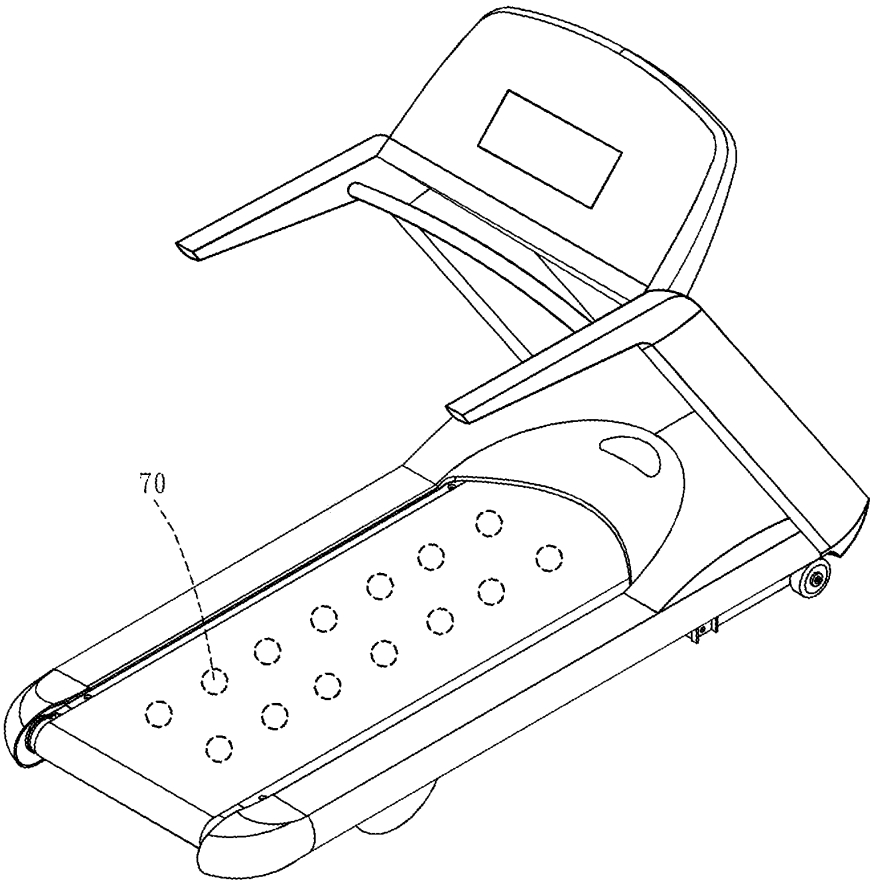

FIG. 5

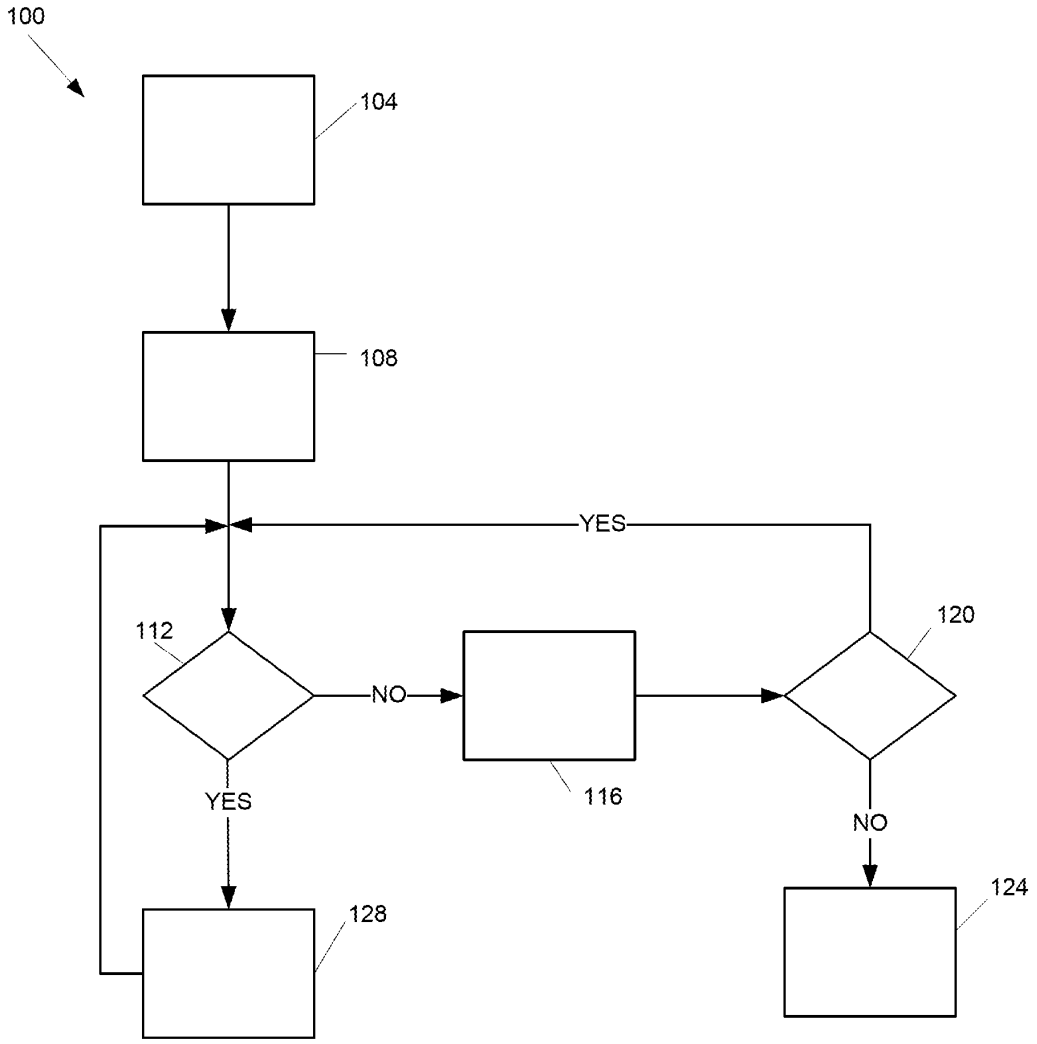

FIG. 6

PTO/AIA/01 (06-12)
Approved for use through 01/31/2014. OMB 0651-0032
U.S. Patent and Trademark Office; U.S. DEPARTMENT OF COMMERCE
Under the Paperwork Reduction Act of 1995, no persons are required to respond to a collection of information unless it displays a valid OMB control number.

DECLARATION (37 CFR 1.63) FOR UTILITY OR DESIGN APPLICATION USING AN APPLICATION DATA SHEET (37 CFR 1.76)

Title of Invention	EXERCISE APPARATUS WITH EXERCISE USE VERIFICATION FUNCTION AND VERIFYING METHOD

As the below named inventor, I hereby declare that:

This declaration is directed to:

- [x] The attached application, or
- [ ] United States application or PCT international application number _____

filed on _____.

The above-identified application was made or authorized to be made by me.

I believe that I am the original inventor or an original joint inventor of a claimed invention in the application.

I hereby acknowledge that any willful false statement made in this declaration is punishable under 18 U.S.C. 1001 by fine or imprisonment of not more than five (5) years, or both.

WARNING:

Petitioner/applicant is cautioned to avoid submitting personal information in documents filed in a patent application that may contribute to identity theft. Personal information such as social security numbers, bank account numbers, or credit card numbers (other than a check or credit card authorization form PTO-2038 submitted for payment purposes) is never required by the USPTO to support a petition or an application. If this type of personal information is included in documents submitted to the USPTO, petitioners/applicants should consider redacting such personal information from the documents before submitting them to the USPTO. Petitioner/applicant is advised that the record of a patent application is available to the public after publication of the application (unless a non-publication request in compliance with 37 CFR 1.213(a) is made in the application) or issuance of a patent. Furthermore, the record from an abandoned application may also be available to the public if the application is referenced in a published application or an issued patent (see 37 CFR 1.14). Checks and credit card authorization forms PTO-2038 submitted for payment purposes are not retained in the application file and therefore are not publicly available.

LEGAL NAME OF INVENTOR

Inventor: Nathan Pyles Date (Optional): 1/19/16

Signature: _____

Note: An application data sheet (PTO/SB/14 or equivalent), including naming the entire inventive entity, must accompany this form or must have been previously filed. Use an additional PTO/AIA/01 form for each additional inventor.

This collection of information is required by 35 U.S.C. 115 and 37 CFR 1.63. The information is required to obtain or retain a benefit by the public which is to file (and by the USPTO to process) an application. Confidentiality is governed by 35 U.S.C. 122 and 37 CFR 1.11 and 1.14. This collection is estimated to take 1 minute to complete, including gathering, preparing, and submitting the completed application form to the USPTO. Time will vary depending upon the individual case. Any comments on the amount of time you require to complete this form and/or suggestions for reducing this burden, should be sent to the Chief Information Officer, U.S. Patent and Trademark Office, U.S. Department of Commerce, P.O. Box 1450, Alexandria, VA 22313-1450. DO NOT SEND FEES OR COMPLETED FORMS TO THIS ADDRESS. **SEND TO: Commissioner for Patents, P.O. Box 1450, Alexandria, VA 22313-1450.**

If you need assistance in completing the form, call 1-800-PTO-9199 and select option 2.