US008287434B2

(12) **United States Patent**
Zavadsky et al.

(10) **Patent No.: US 8,287,434 B2**
(45) **Date of Patent: Oct. 16, 2012**

(54) **METHOD AND APPARATUS FOR FACILITATING STRENGTH TRAINING**

(76) Inventors: **Vyacheslav Zavadsky**, Ottawa (CA); **Mykola Sherstyuk**, Ottawa (CA)

(*) Notice: Subject to any disclaimer, the term of this patent is extended or adjusted under 35 U.S.C. 154(b) by 0 days.

(21) Appl. No.: **13/111,869**

(22) Filed: **May 19, 2011**

(65) **Prior Publication Data**

US 2011/0251021 A1 Oct. 13, 2011

Related U.S. Application Data

(63) Continuation-in-part of application No. 12/618,680, filed on Nov. 13, 2009, now Pat. No. 7,967,728.

(60) Provisional application No. 61/346,865, filed on May 20, 2010, provisional application No. 61/115,082, filed on Nov. 16, 2008.

(51) **Int. Cl.**
A63B 71/00 (2006.01)

(52) **U.S. Cl.** **482/5**; 482/1; 482/8; 482/901

(58) **Field of Classification Search** 482/1–9, 482/51, 54, 57, 900–902; 434/247
See application file for complete search history.

(56) **References Cited**

U.S. PATENT DOCUMENTS

4,556,216	A	12/1985	Pitkanen	
5,054,771	A	10/1991	Mansfield	
5,149,084	A	9/1992	Dalebout	
5,839,990	A	11/1998	Virkkala	
5,888,172	A *	3/1999	Andrus et al.	482/7
6,244,988	B1	6/2001	Delman	
6,447,424	B1	9/2002	Ashby	
6,872,187	B1	3/2005	Stark	
6,997,853	B1 *	2/2006	Cuskaden et al.	482/8
7,156,780	B1	1/2007	Fuchs	
7,537,546	B2	5/2009	Watterson	
7,628,730	B1	12/2009	Watterson	
7,637,847	B1	12/2009	Hickman	
7,699,755	B2	4/2010	Feldman	
7,727,117	B2	6/2010	Feldman	
8,012,064	B2	9/2011	Martens	
8,057,360	B2 *	11/2011	Shea	482/8
2003/0171190	A1 *	9/2003	Rice	482/57
2003/0211916	A1	11/2003	Capuano	
2009/0325766	A1 *	12/2009	Kasama et al.	482/8
2010/0197462	A1	8/2010	Piane, Jr.	

OTHER PUBLICATIONS

http://glovepie.org/glovepie.php Glovepie, programmable input emulator. Web page printed on May 18, 2010.

(Continued)

Primary Examiner — Glenn Richman

(57) **ABSTRACT**

Strength training exercise is facilitated by a video gaming system (VGS). VGS communicates information about the exercise resistance force with an exercise device. Strength training machine coupled with the VGS and acts as a game controller. The machine provides resistance by an electrical motor. Resistance can be adjusted using data send from the VGS. Further, the resistance can pulsate during an exercise motion, providing internal muscle massage. The video gaming system uses a non-contact method to monitor a physiological parameter of the user. For example, a video camera is used to detect heart rate. Pose tracking information is used to detect the level of user exhaustion. Those and other monitored parameters are used to adjust the regime for either current or future exercises. The regime is optimized to increase workout efficiency. An activity not directly related to exercise, for example game, is unlocked if exercise performance is on track.

20 Claims, 52 Drawing Sheets

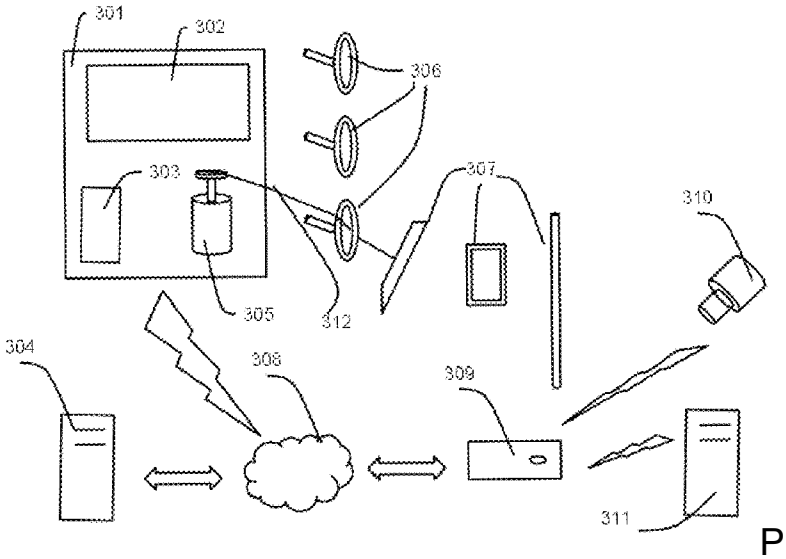

PELOTON-1017
Peloton Interactive v. Johnson Health
IPR2023-01165

OTHER PUBLICATIONS
http://service.nordictrack.com/CustomerService/pdfDownload.do?fileName=NTSY9896.0-248458.pdf&directory=%2fpdf%2f NordictTrackPersonal Trainer III User manual. Downloaded and printed May 25, 2010.
http://www.hcc.cz/article/powerman-3 Web Page printed on May 25, 2010. Koelber powerman 3.
http://www.newbody.de/koelbel/isokinator/isokinator__pro__typ1.php4 Web page printed on May 25, 2010. Kolebel Isokinator pro.
d2 Square products description, http://www.d2tech.net/products.shtml.
Contact-Free Measurement of Cardiac Pulse Based on the Analysis of Thermal Imagery1 M. Garbey2, N. Sun2, A. Merla3, and I. Pavlidis2 Technical Report No. UH-CS-04-08 Dec. 14, 2004 See Abstract.

* cited by examiner

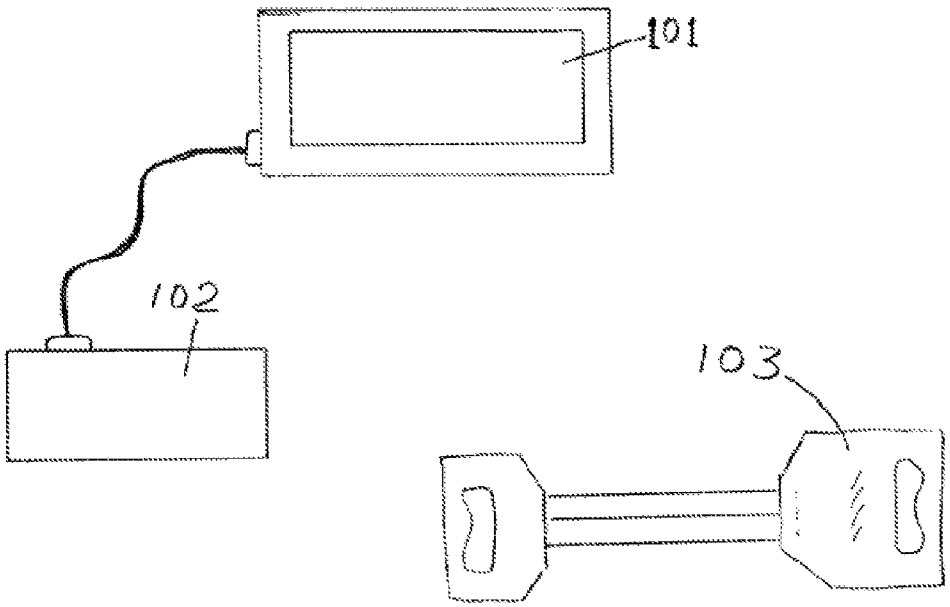

Figure 1

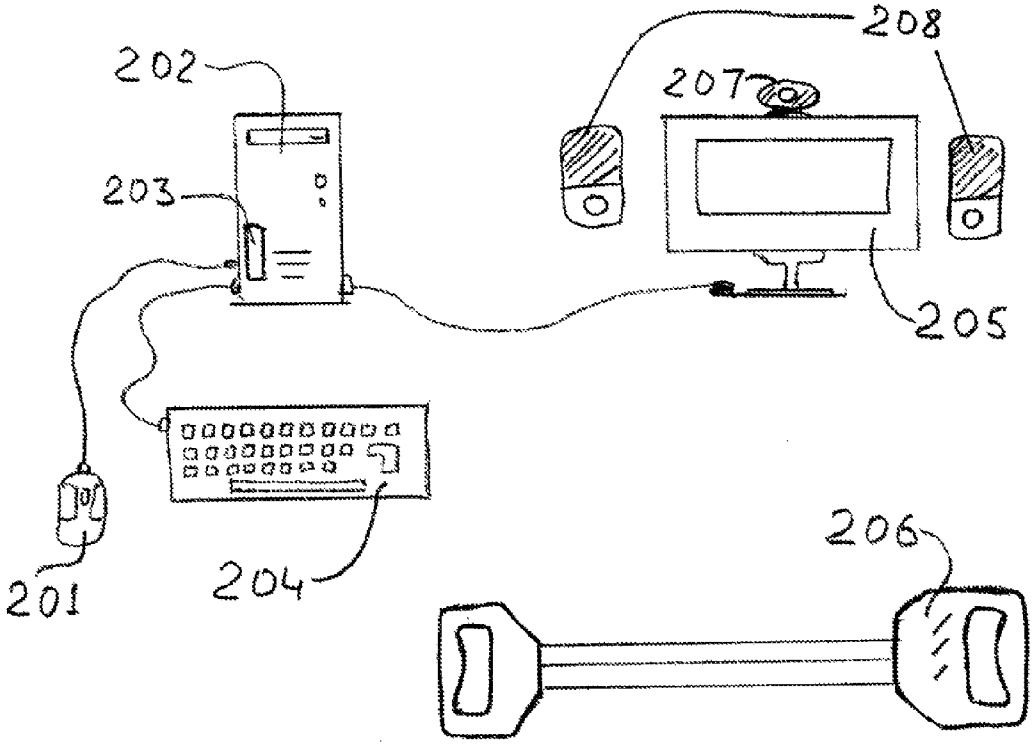

Figure2

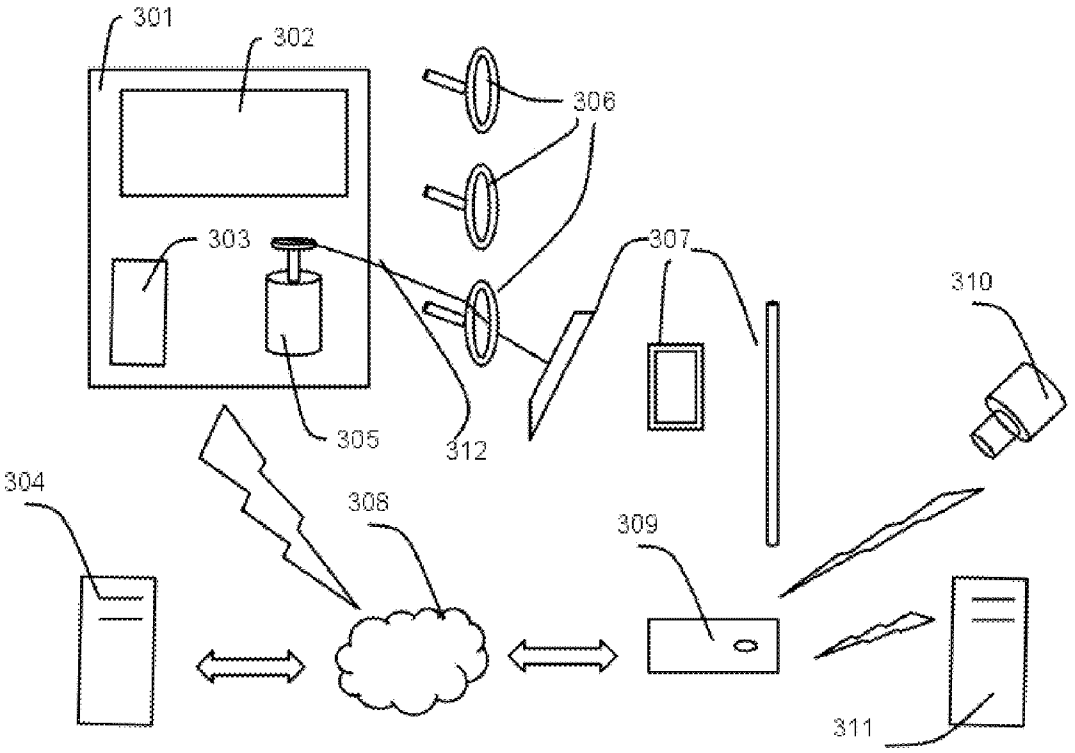

Figure 3

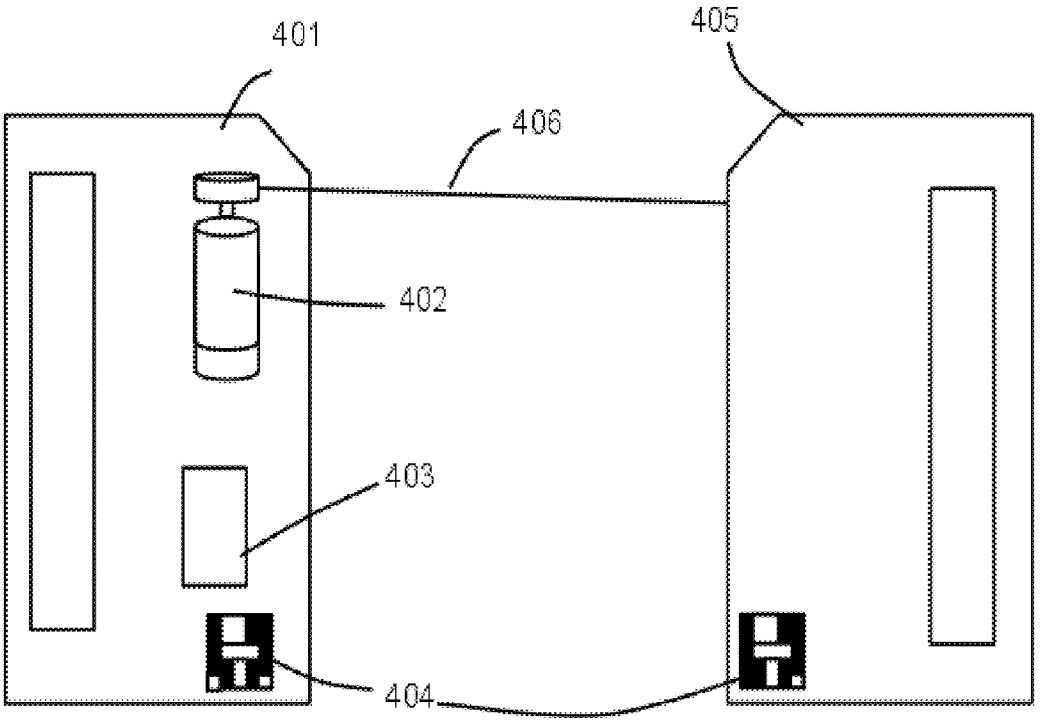

Figure 4

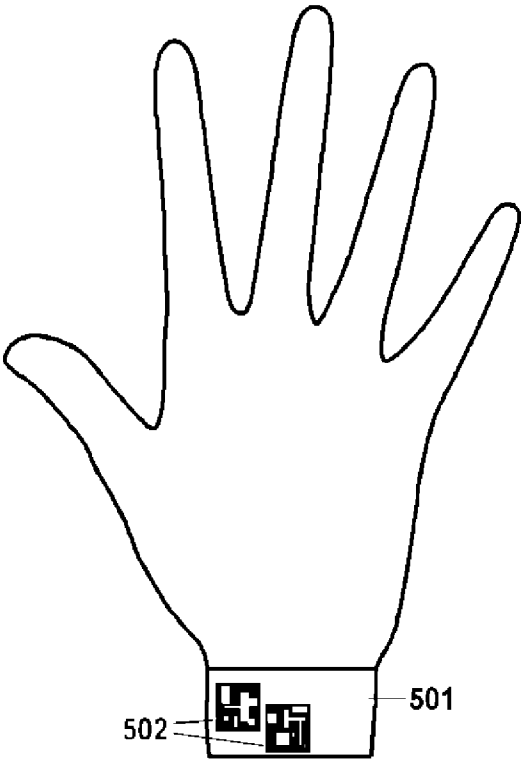

Figure5

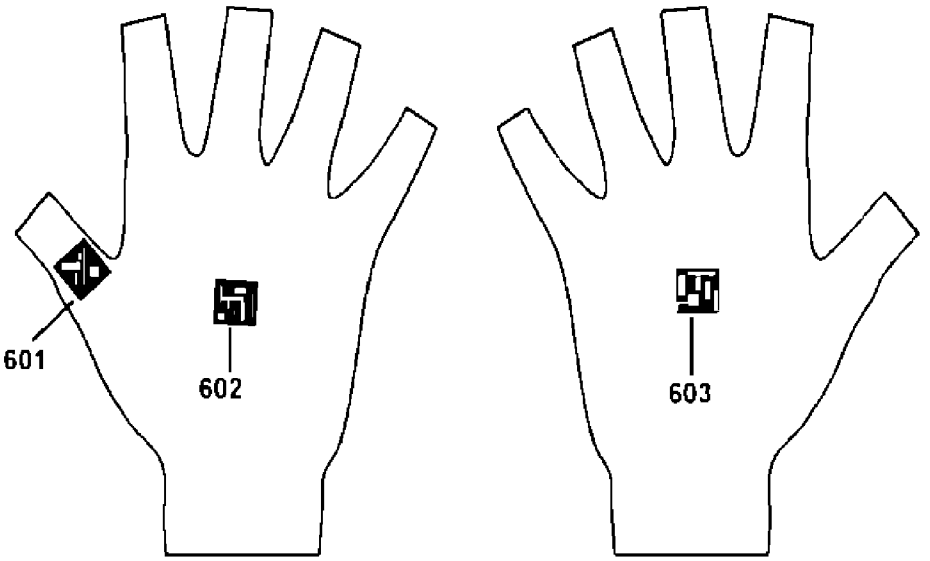

Figure 6

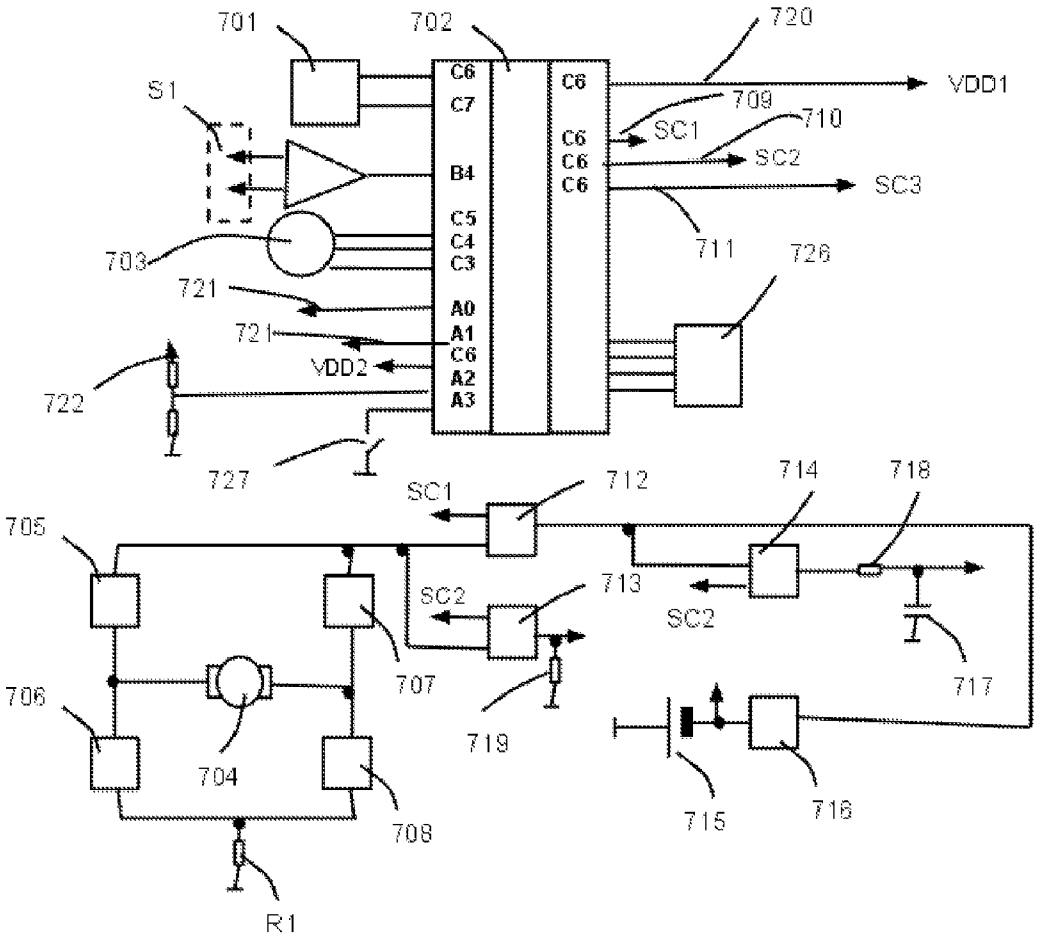
701
702
720
S1
C6
C7
B4
C5
C4
C3
A0
A1
C6
A2
A3
C6
C6
C6
C6
VDD1
709
SC1
710
SC2
SC3
711
726
703
721
721
VDD2
722
727
SC1
712
714
718
705
713
SC2
SC2
707
717
706
719
704
715
716
708
R1

Figure 7

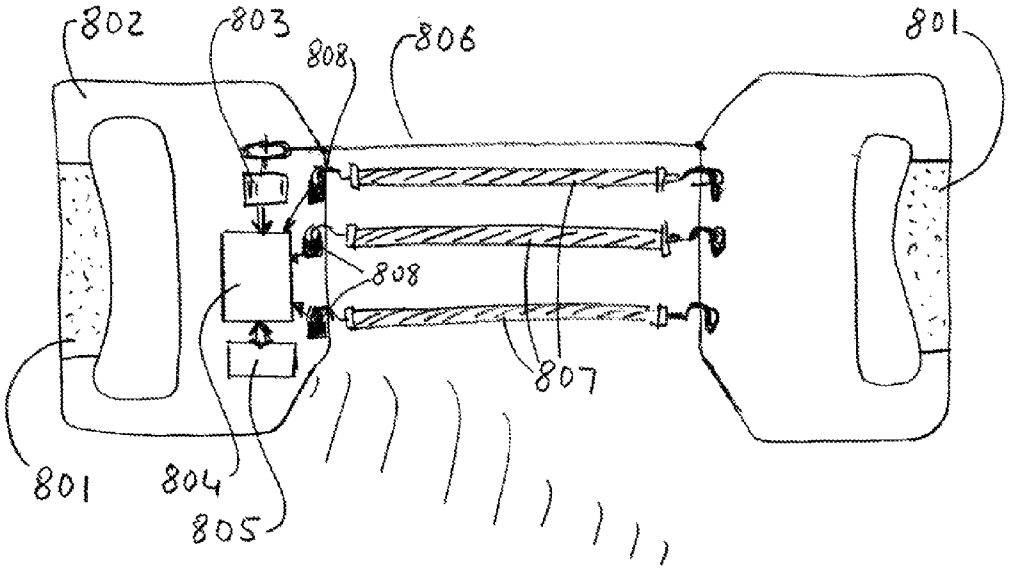

Figure 8.

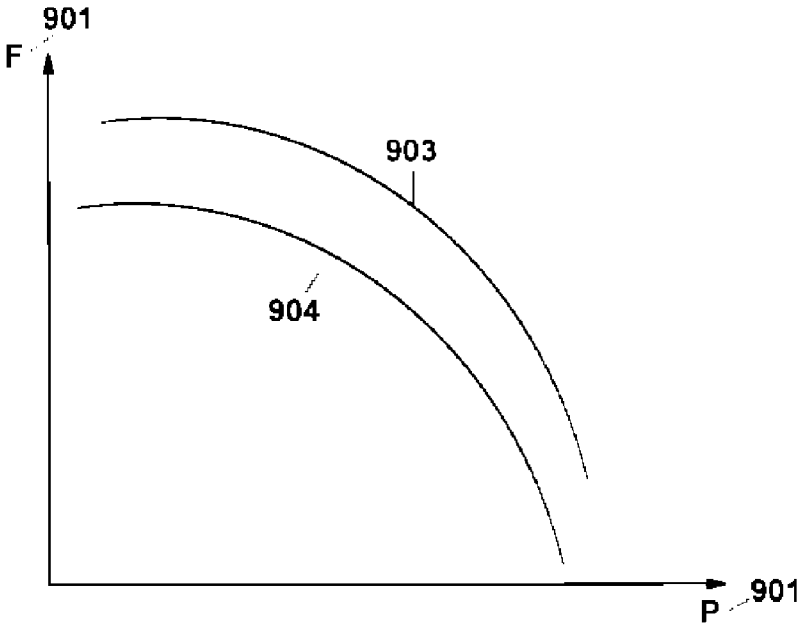

Figure 9

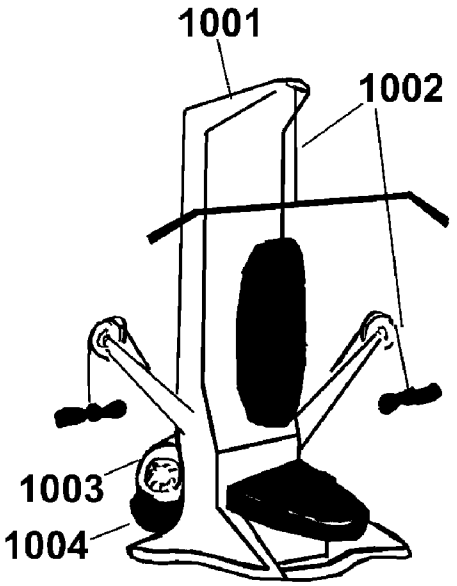

Figure 10

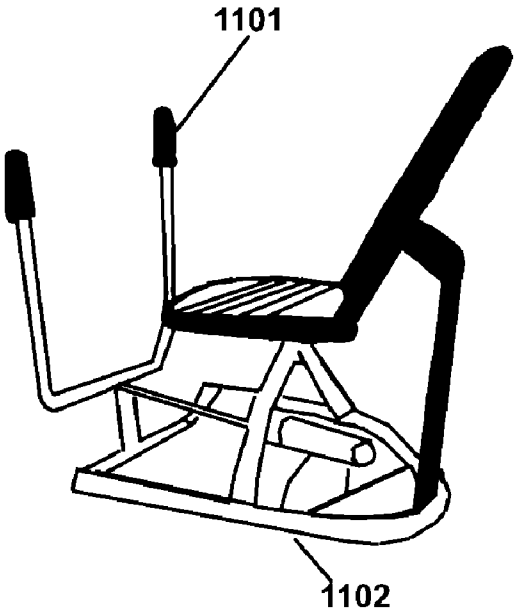

Figure 11

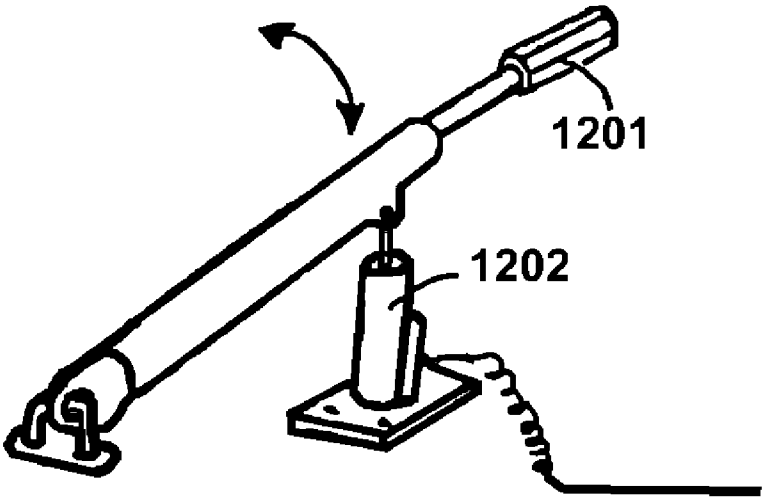

Figure 12

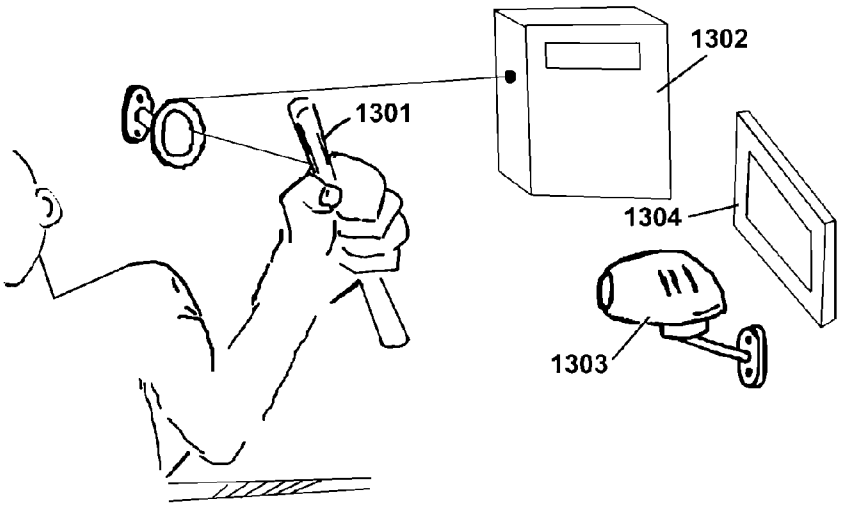

Figure 13

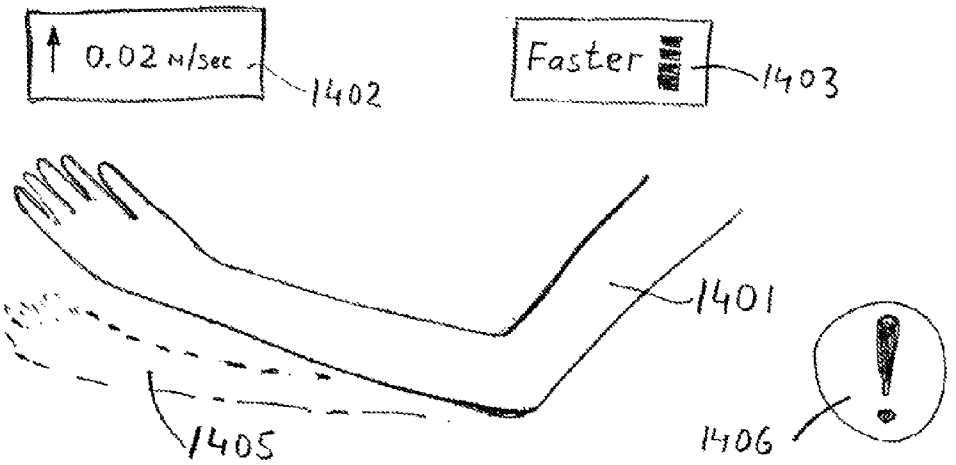

Figure 14

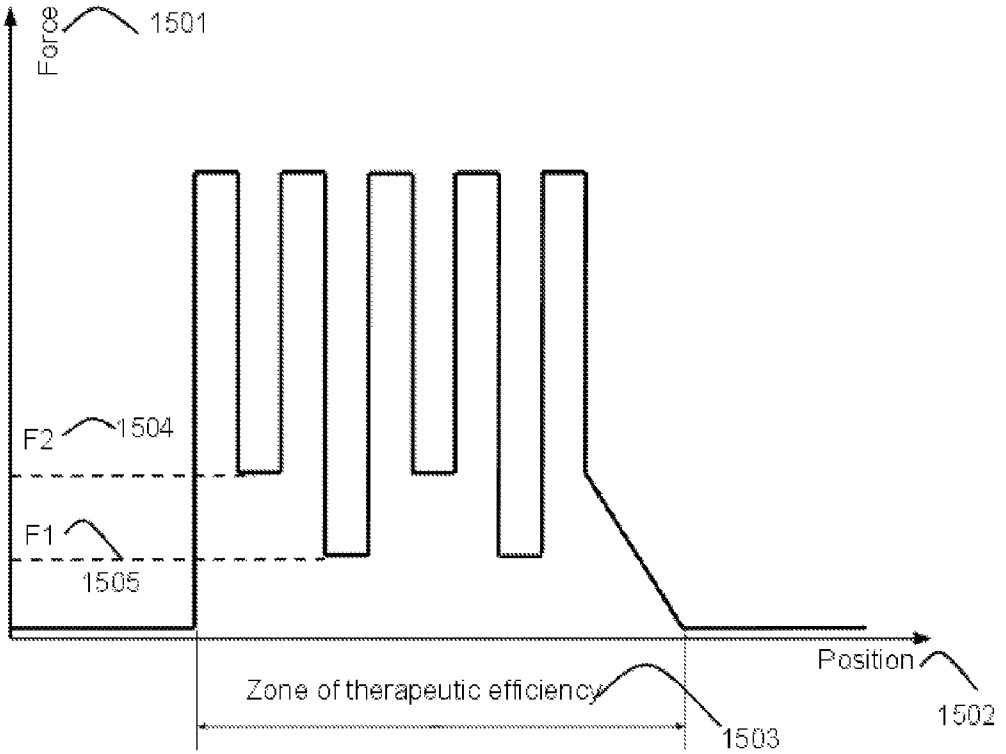
Force
1501
F2
1504
F1
1505
Position
1502
Zone of therapeutic efficiency
1503

Figure 15

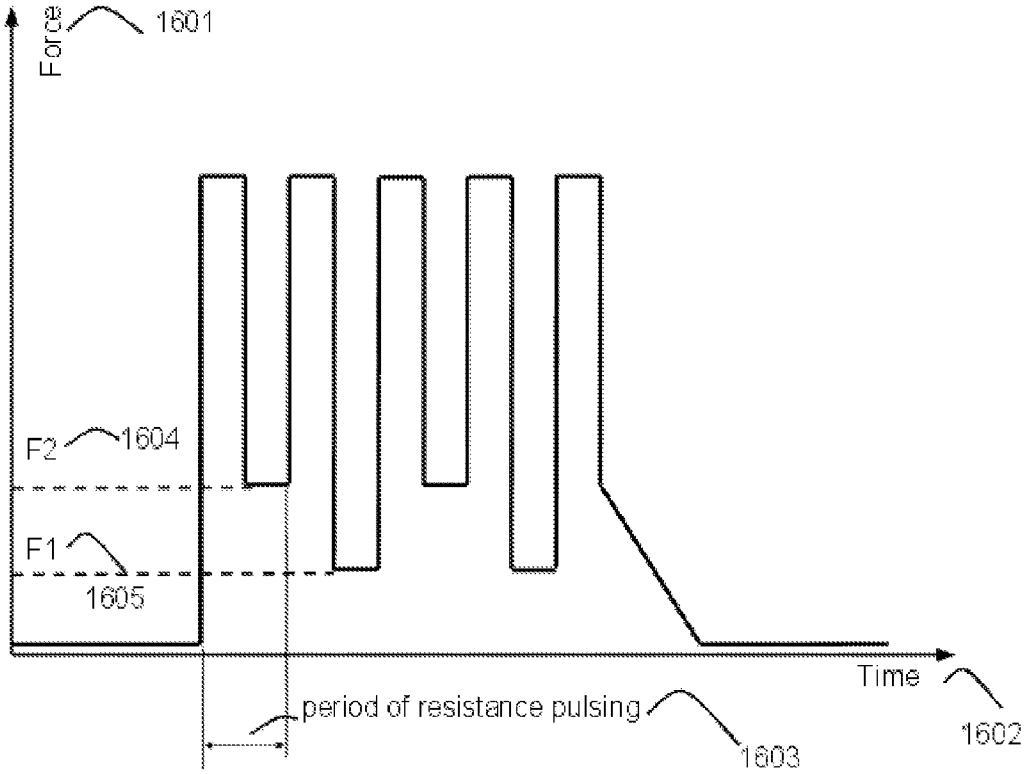

Figure 16

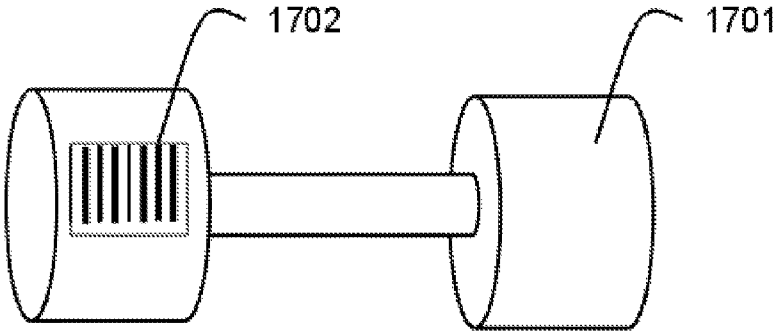

Figure 17

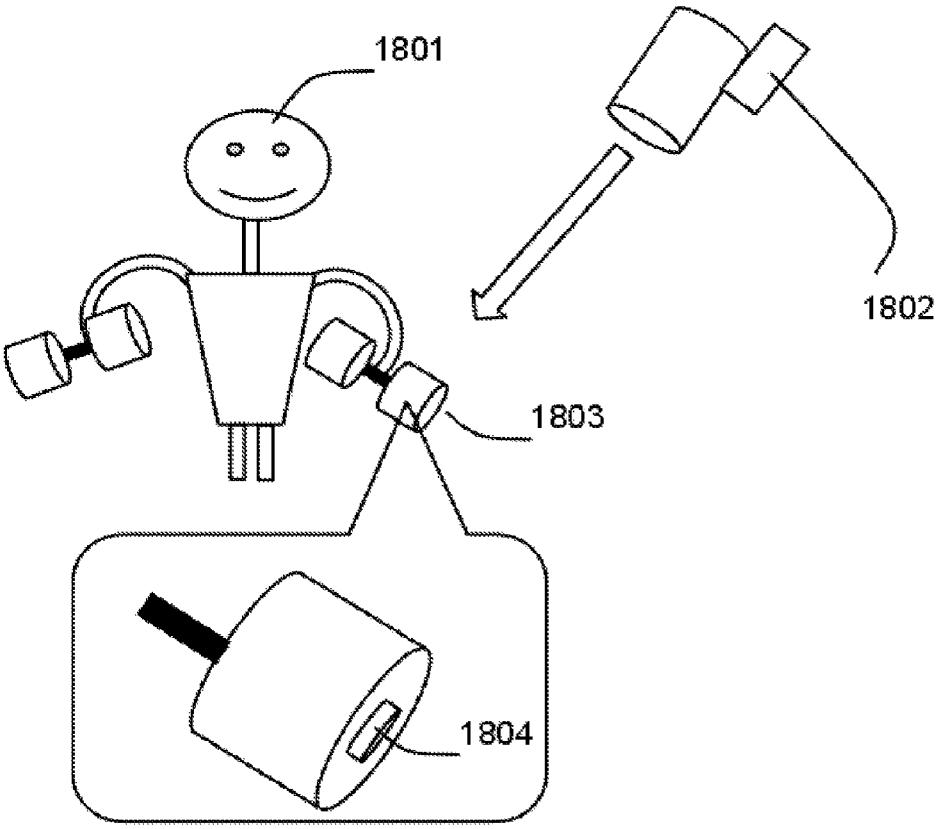

Figure 18

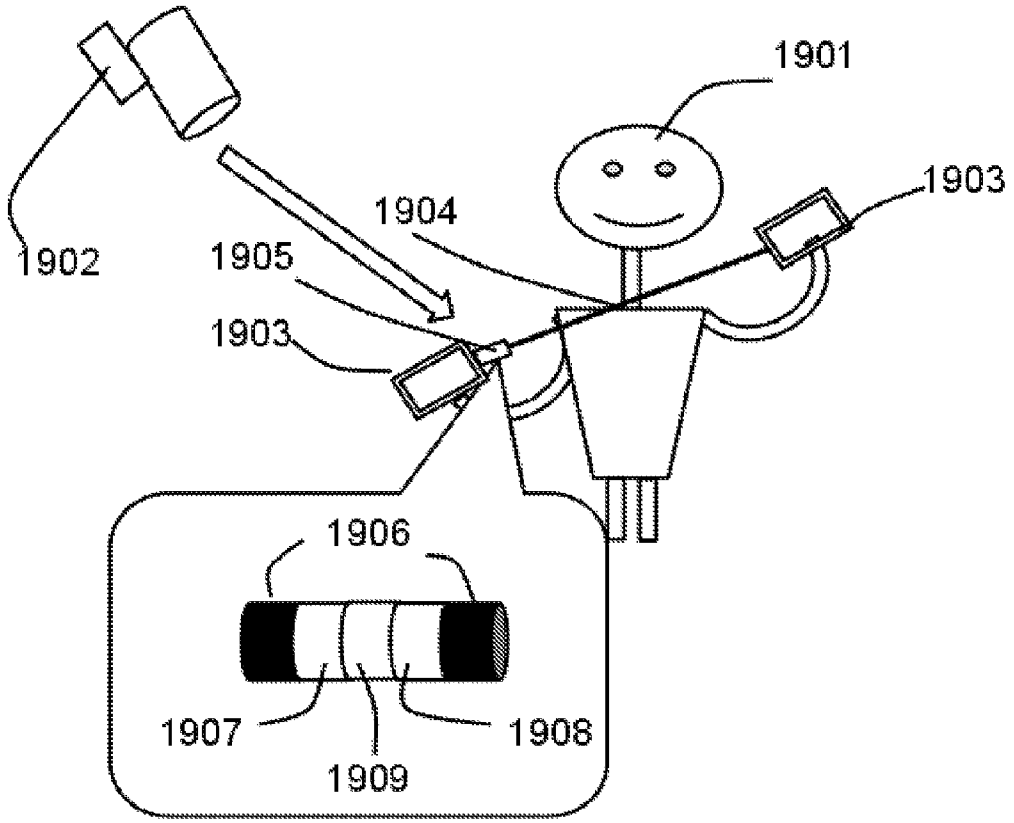

Figure 19

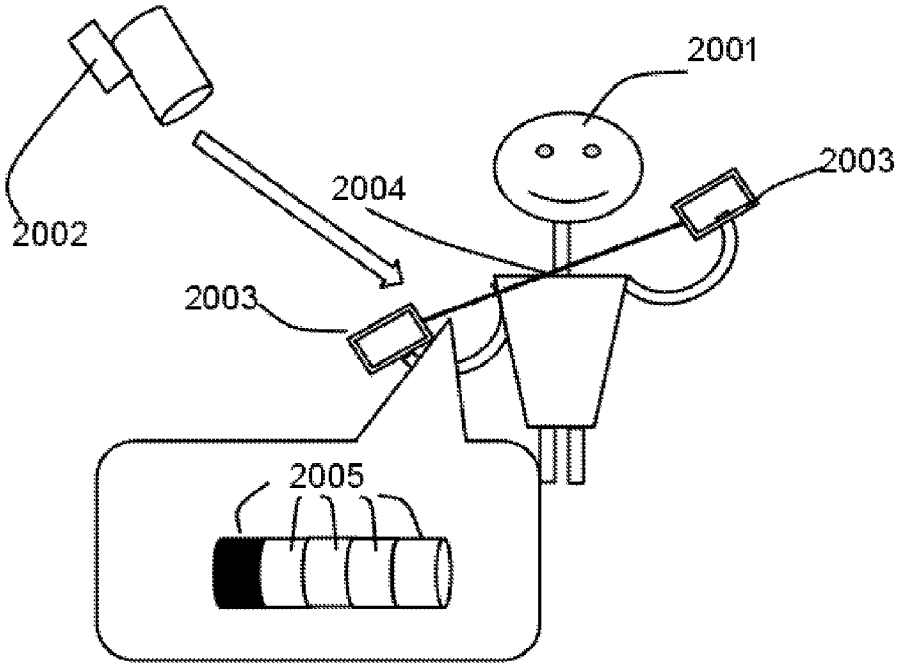

Figure 20

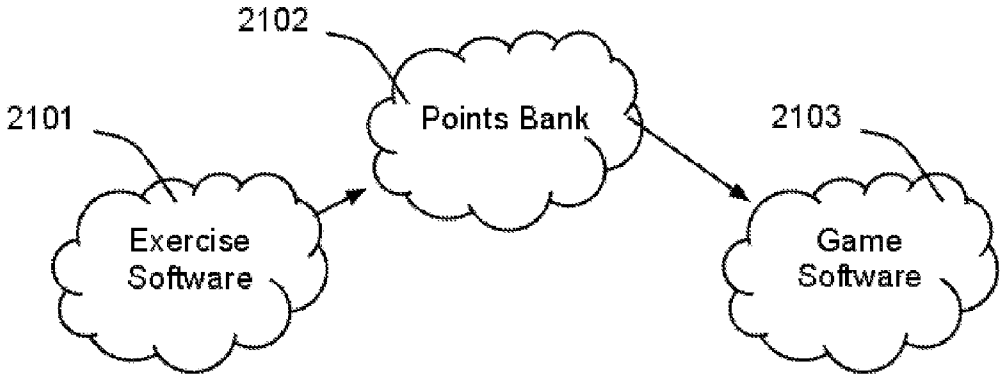

Figure 21

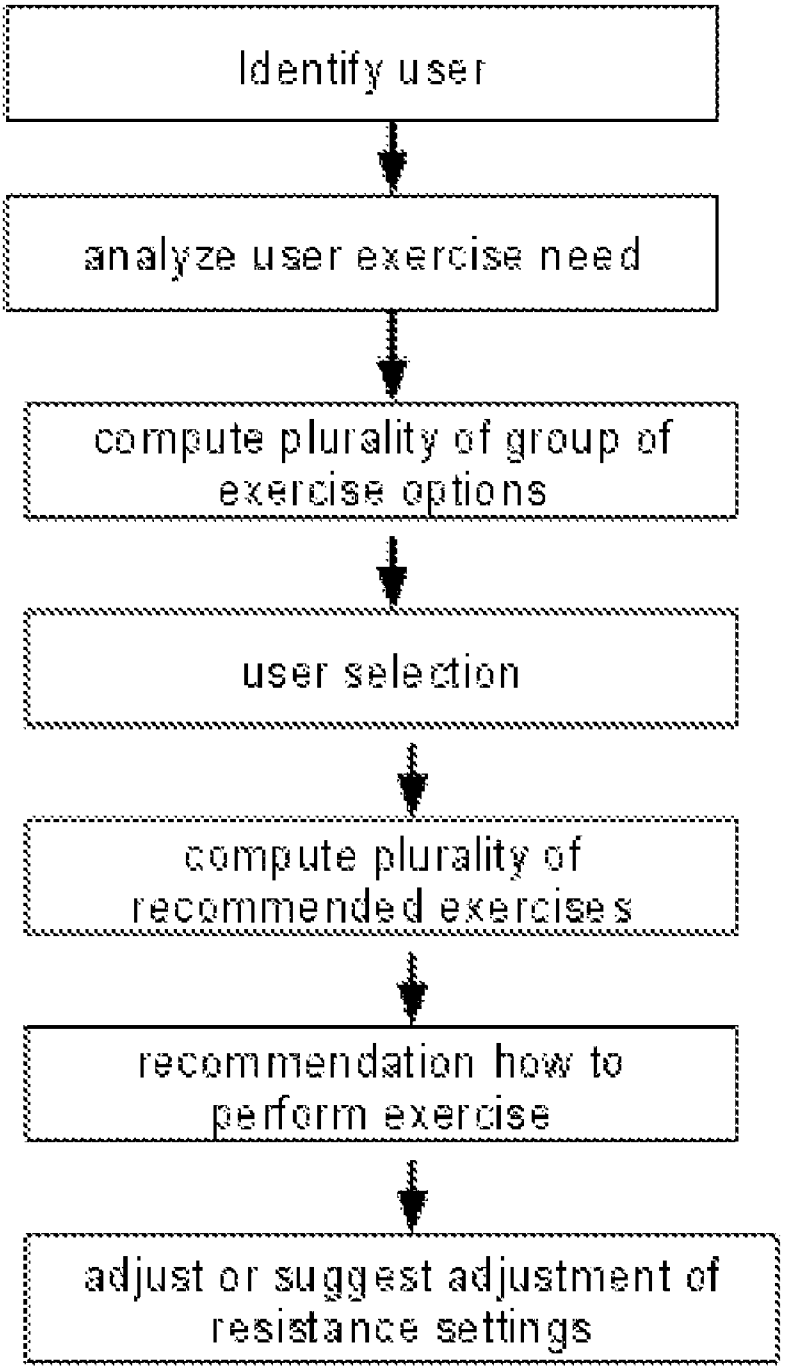
Identify user
analyze user exercise need
compute plurality of group of exercise options
user selection
compute plurality of recommended exercises
recommendation how to perform exercise
adjust or suggest adjustment of resistance settings

Figure 22

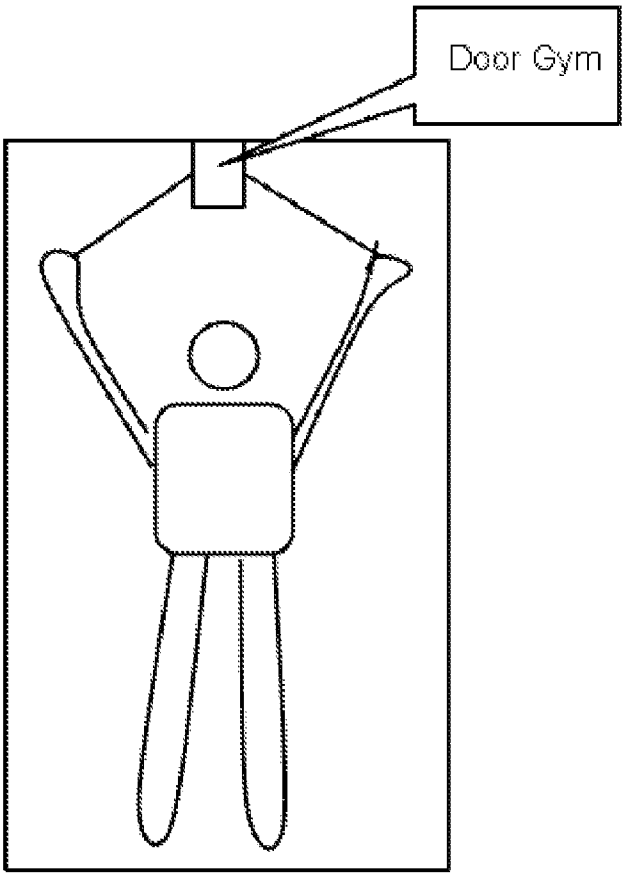

Figure 23

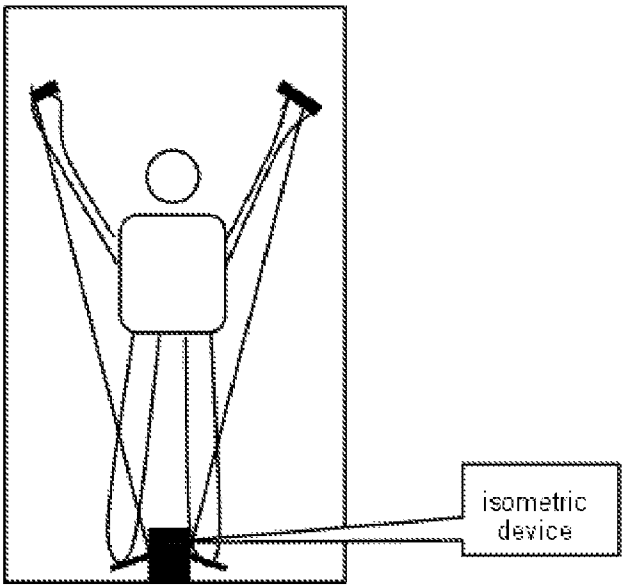

Figure 24

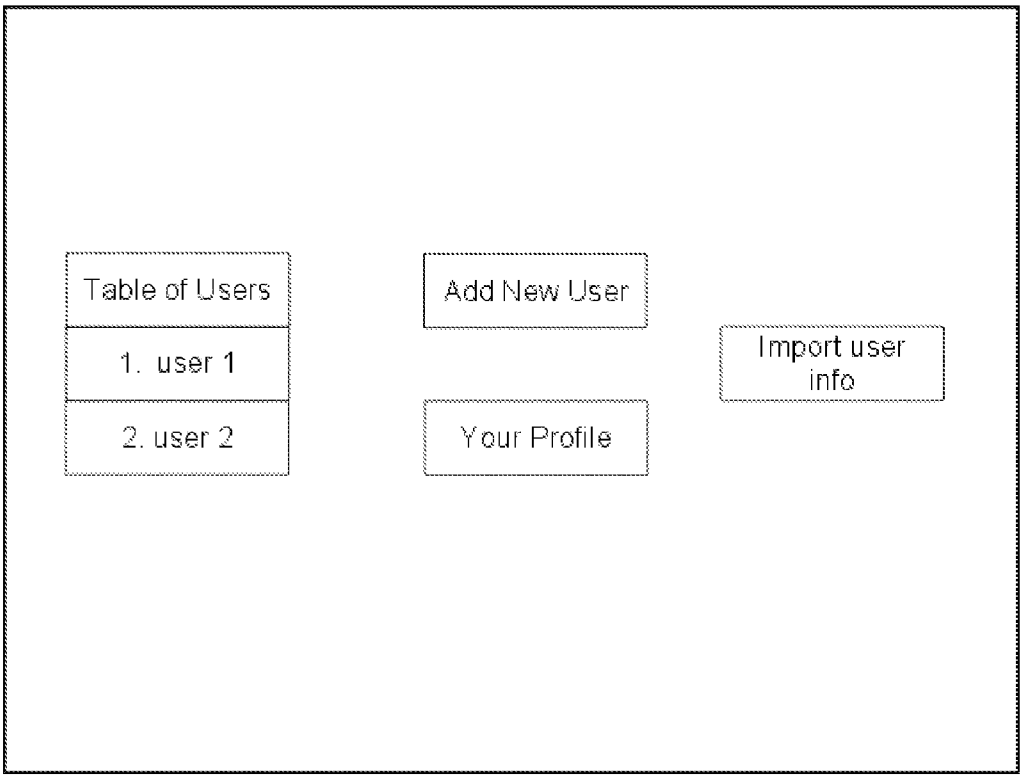
Table of Users
1. user 1
2. user 2
Add New User
Your Profile
Import user info

Figure 25

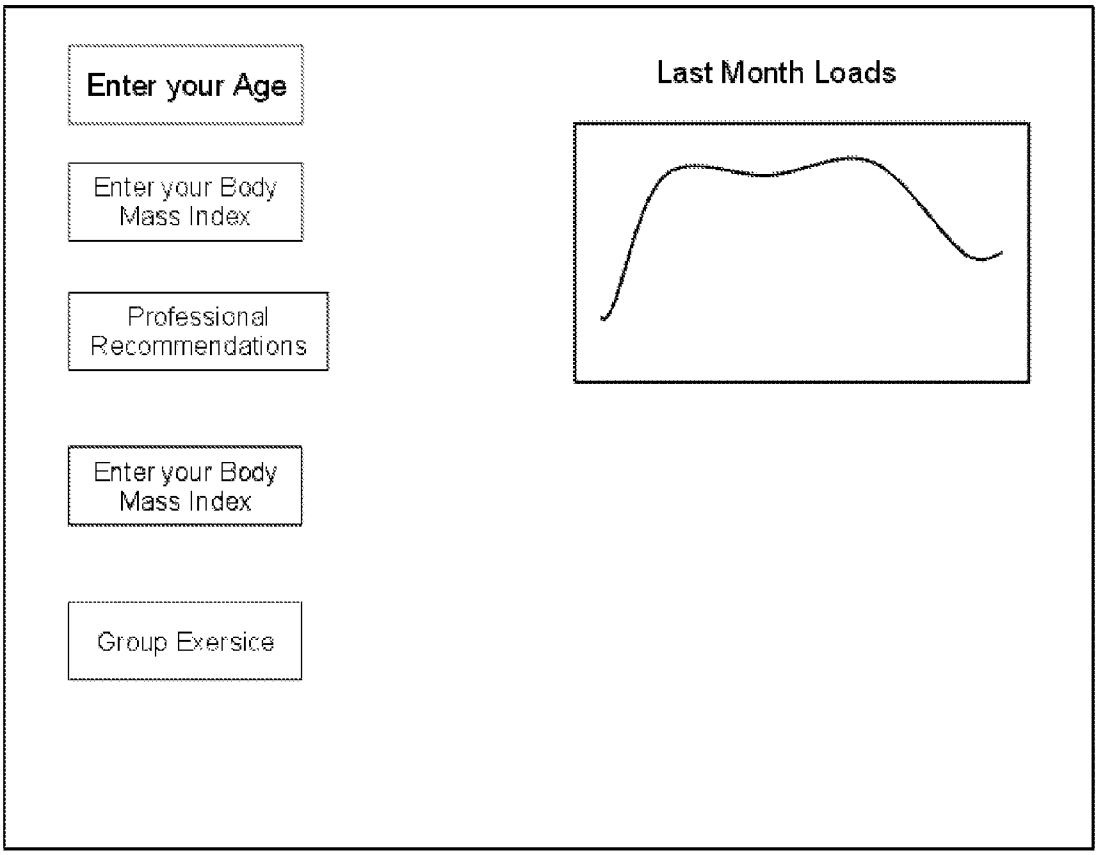
Enter your Age
Enter your Body Mass Index
Professional Recommendations
Enter your Body Mass Index
Group Exersice
Last Month Loads

Figure 26

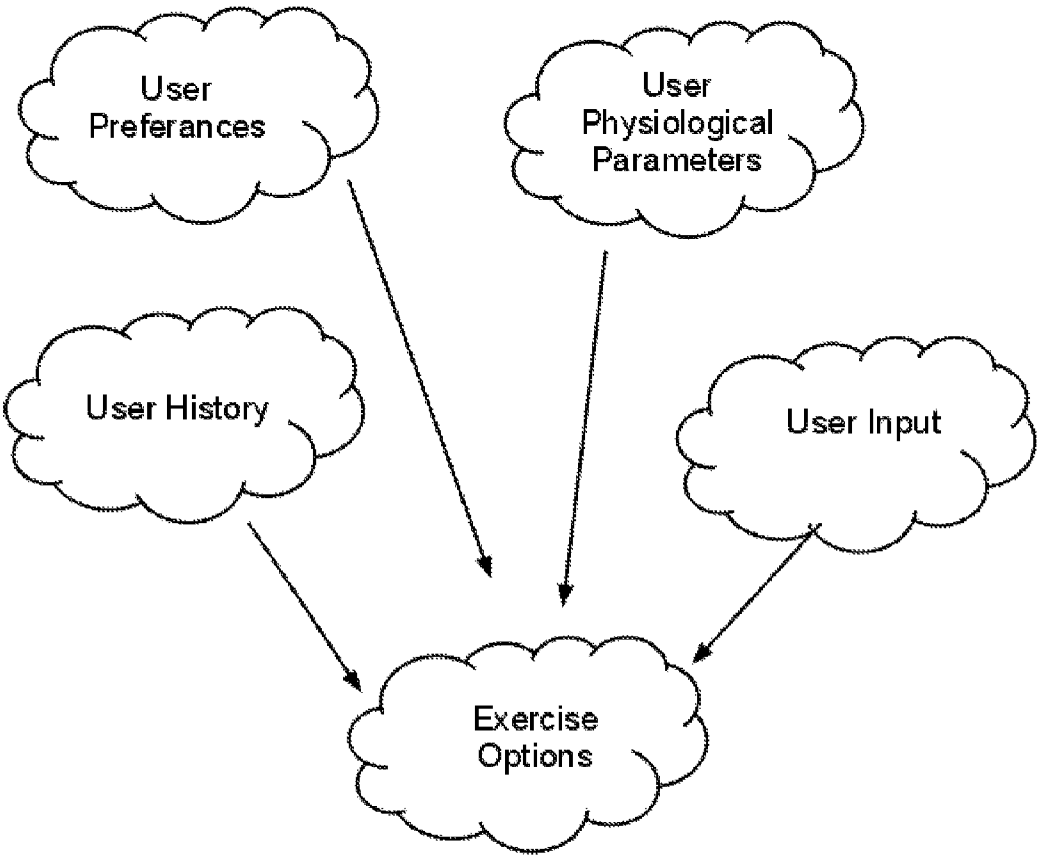

Figure 27

Figure 28

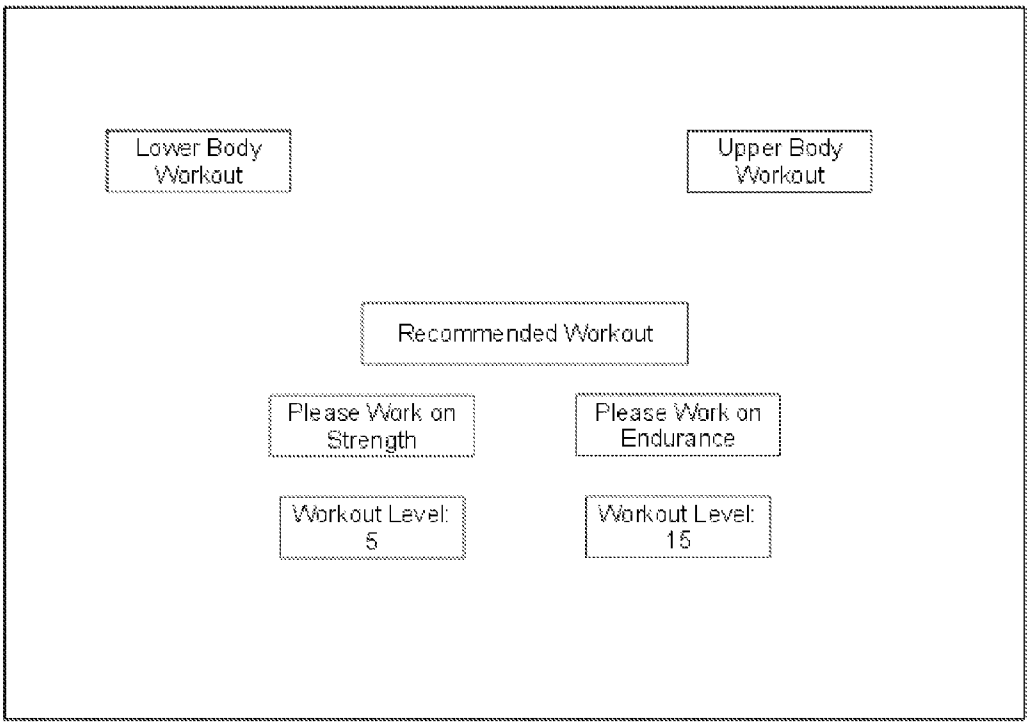
Lower Body Workout
Upper Body Workout
Recommended Workout
Please Work on Strength
Please Work on Endurance
Workout Level: 5
Workout Level: 15

Figure 29

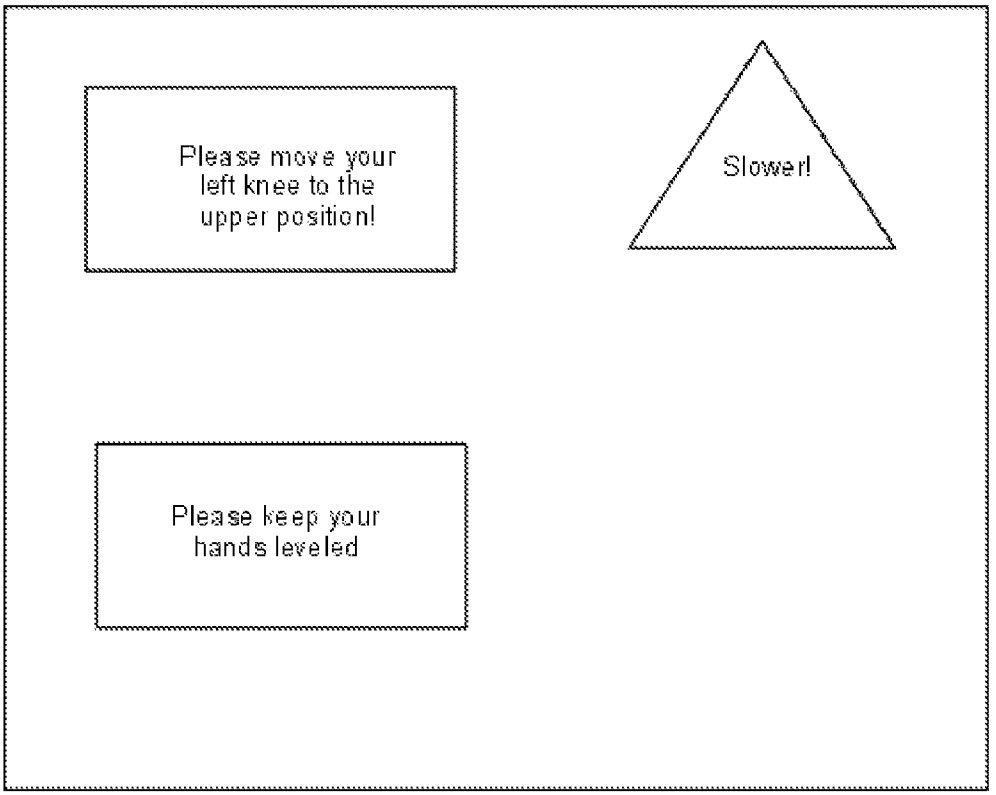
Please move your left knee to the upper position!
Slower!
Please keep your hands leveled

Figure 30

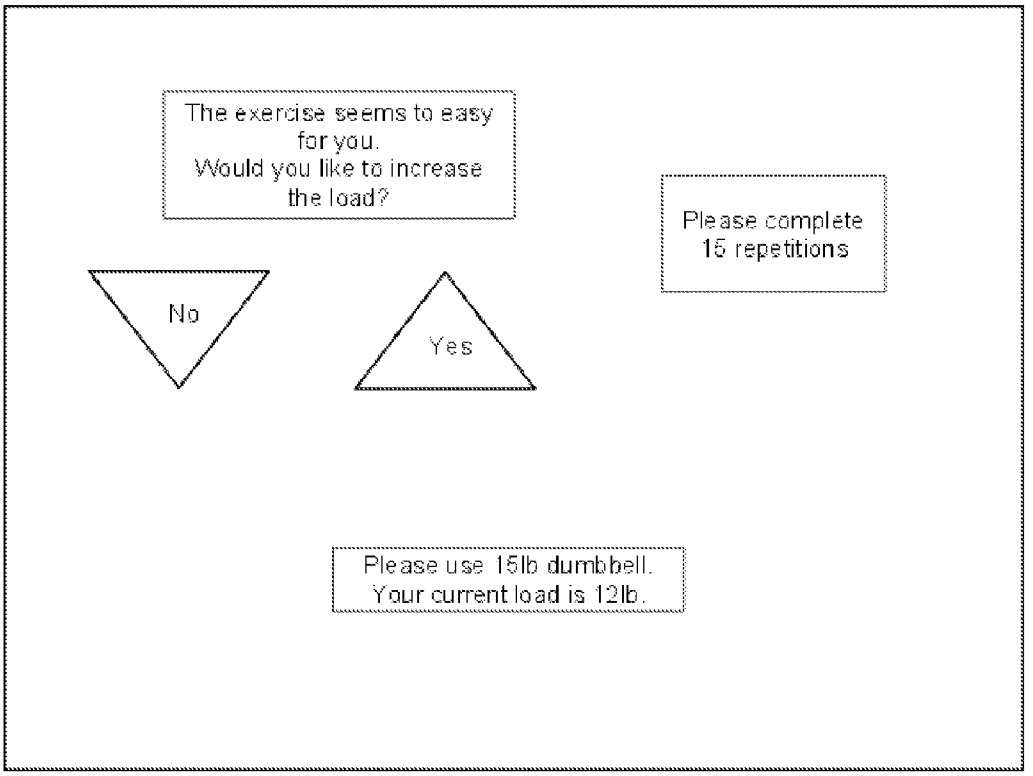
The exercise seems to easy for you.
Would you like to increase the load?
Please complete 15 repetitions
No
Yes
Please use 15lb dumbbell.
Your current load is 12lb.

Figure 31

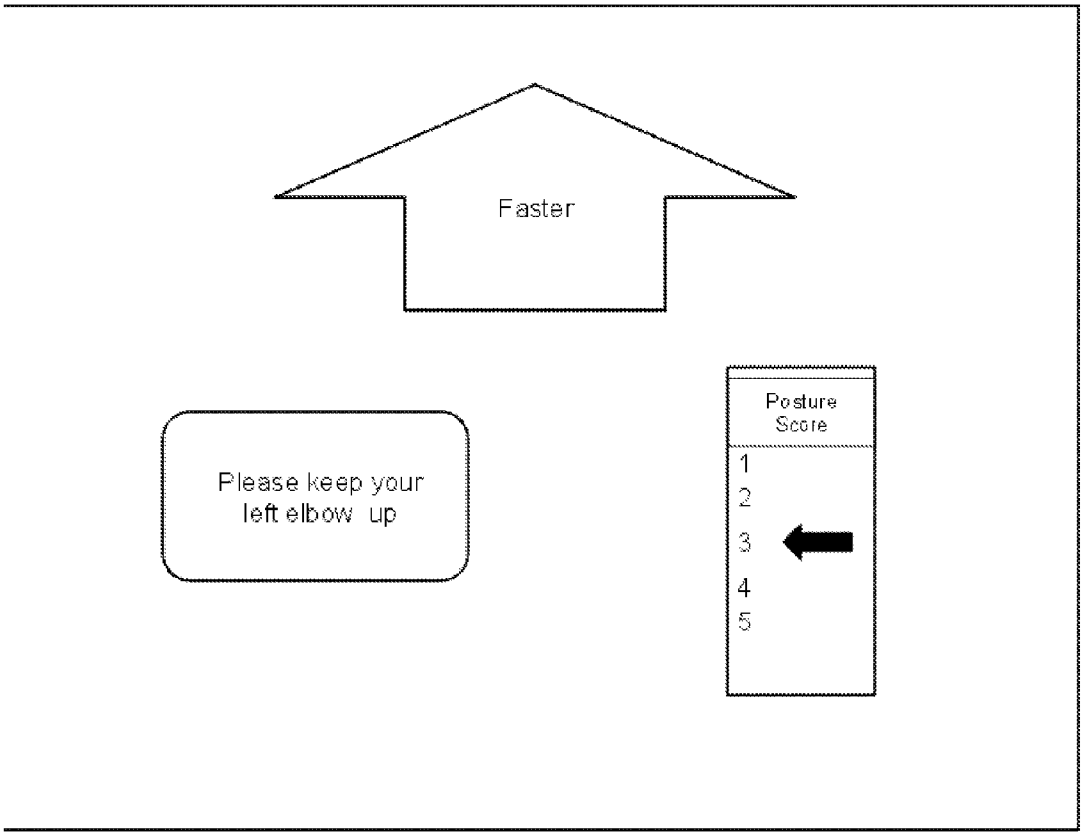

Figure 32

CONGRATULATIONS!
After completing of 15 more push ups you'll get a MAGIC SWORD in World of Warcraft
Number of extra lives you've earned during this exercise
1.02
Extra Rounds for you BFG: 7

Figure 33

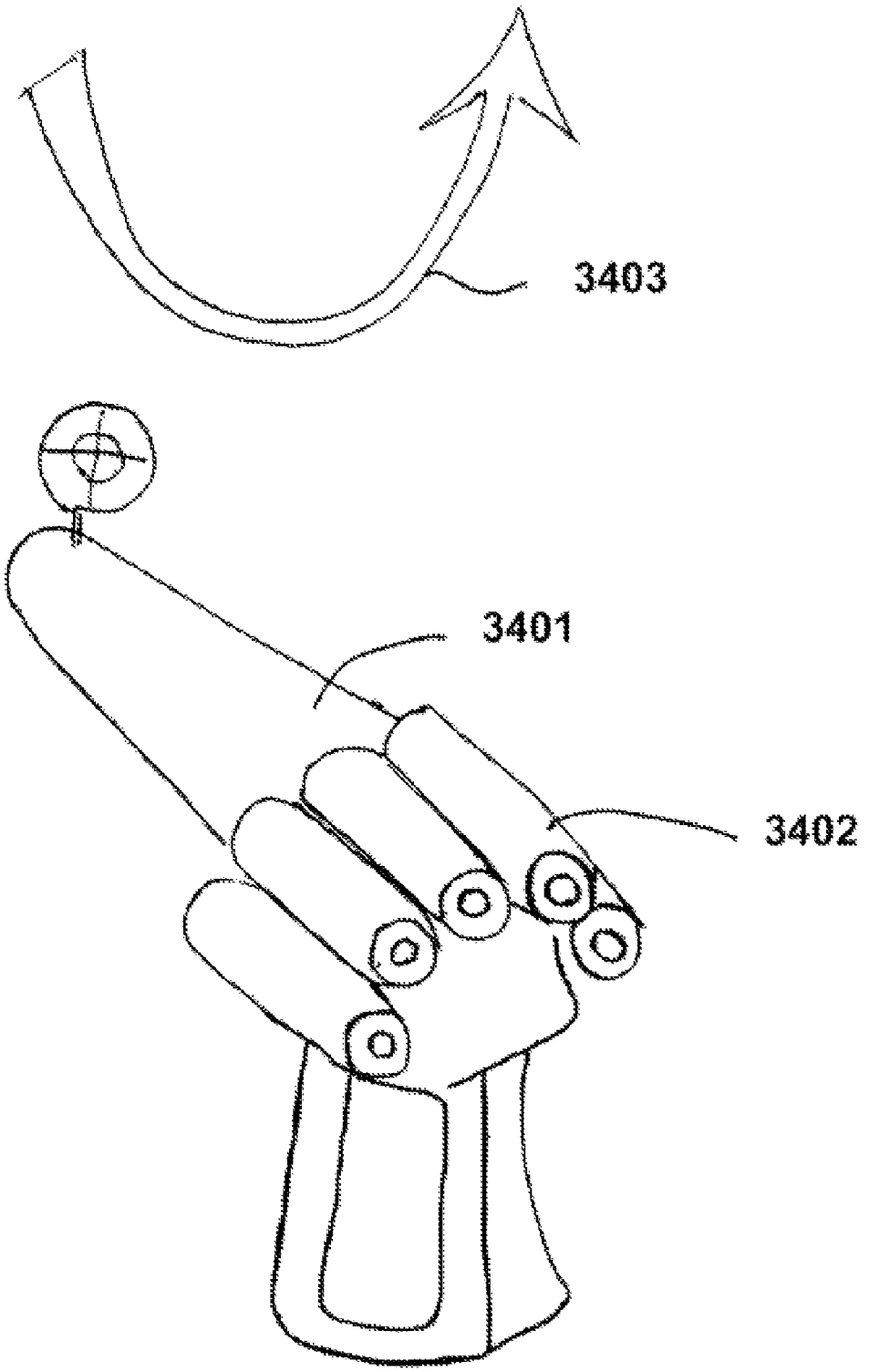

Figure 34

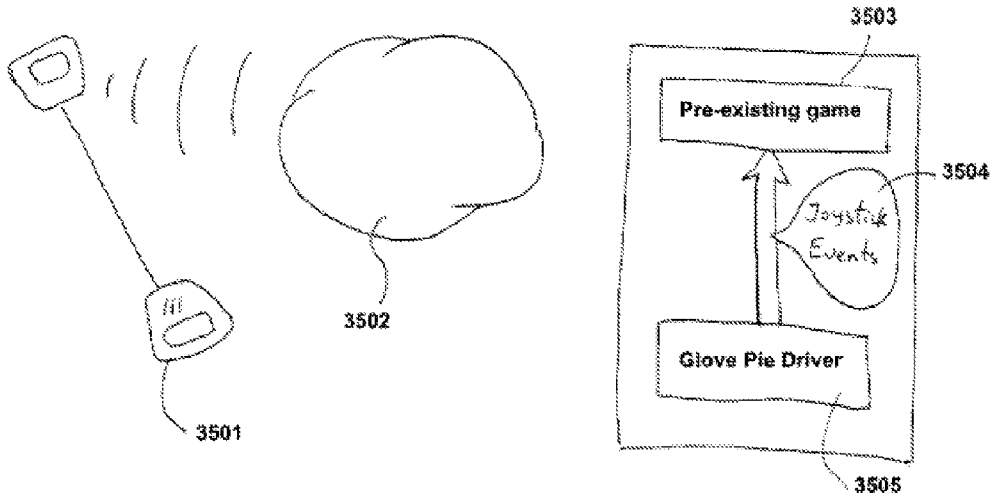

Figure 35

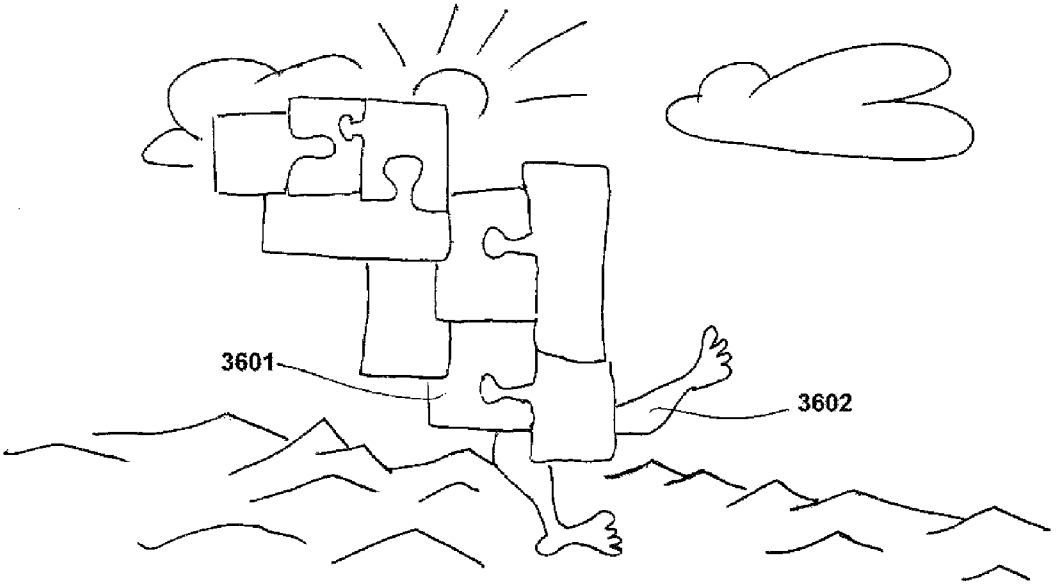

Figure 36

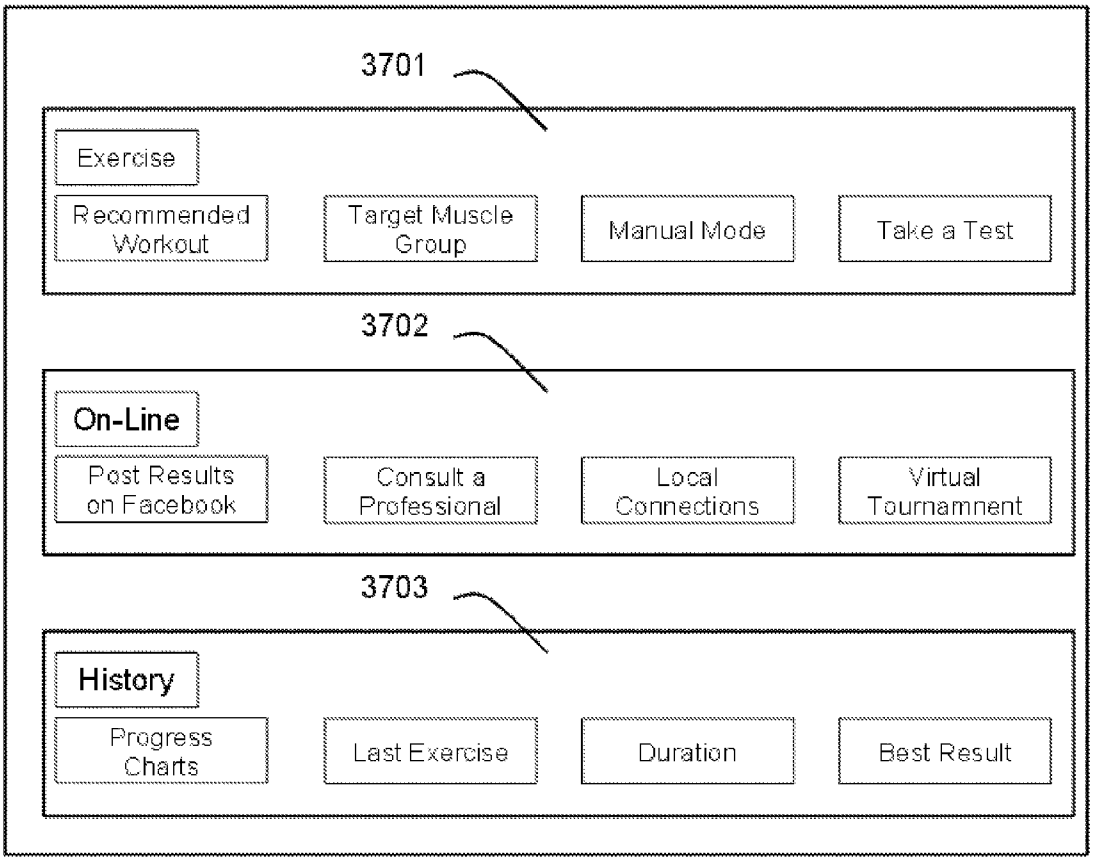
3701
Exercise
Recommended Workout
Target Muscle Group
Manual Mode
Take a Test
3702
On-Line
Post Results on Facebook
Consult a Professional
Local Connections
Virtual Tournamnent
3703
History
Progress Charts
Last Exercise
Duration
Best Result

Figure 37

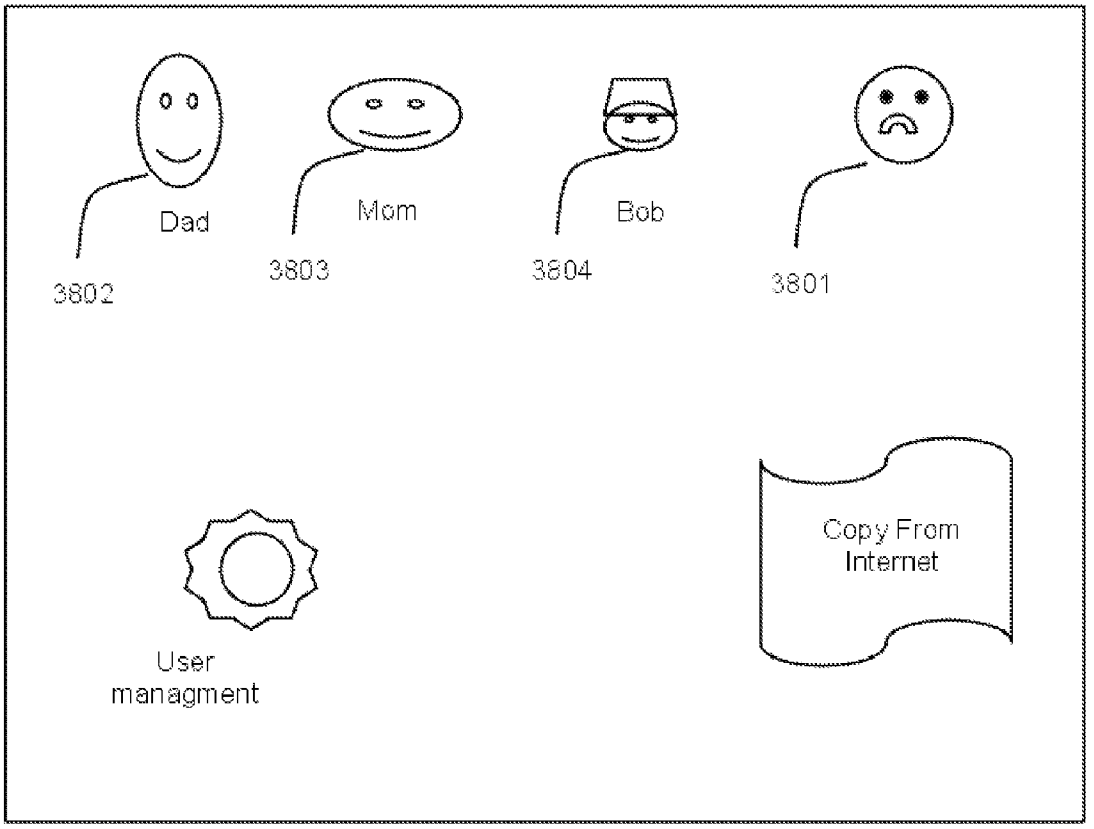
Dad
3802
Mom
3803
Bob
3804
3801
User managment
Copy From Internet

Figure 38

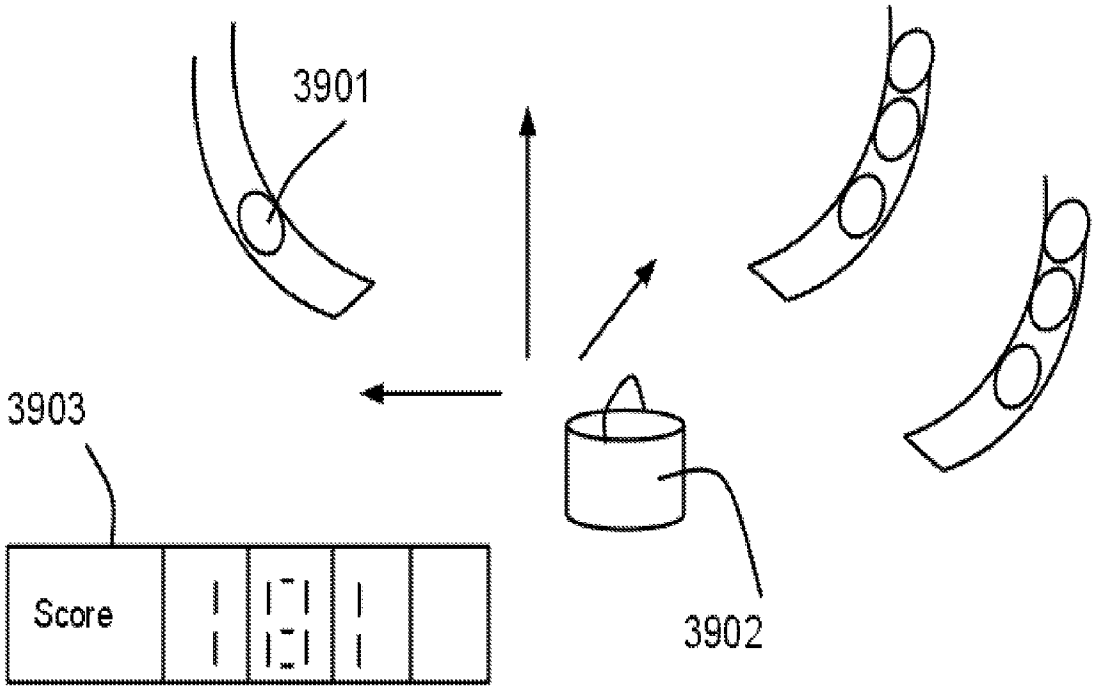

Figure 39

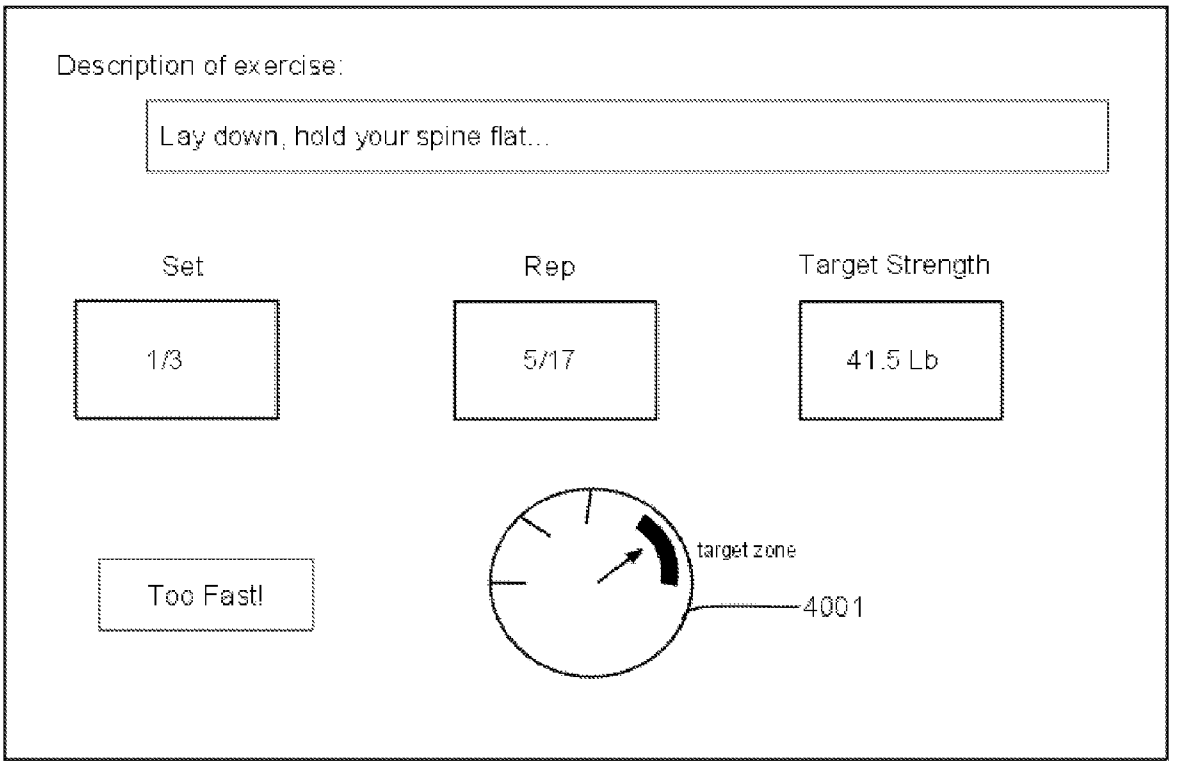
Description of exercise:
Lay down, hold your spine flat...
Set
Rep
Target Strength
1/3
5/17
41.5 Lb
Too Fast!
target zone
4001

Figure 40

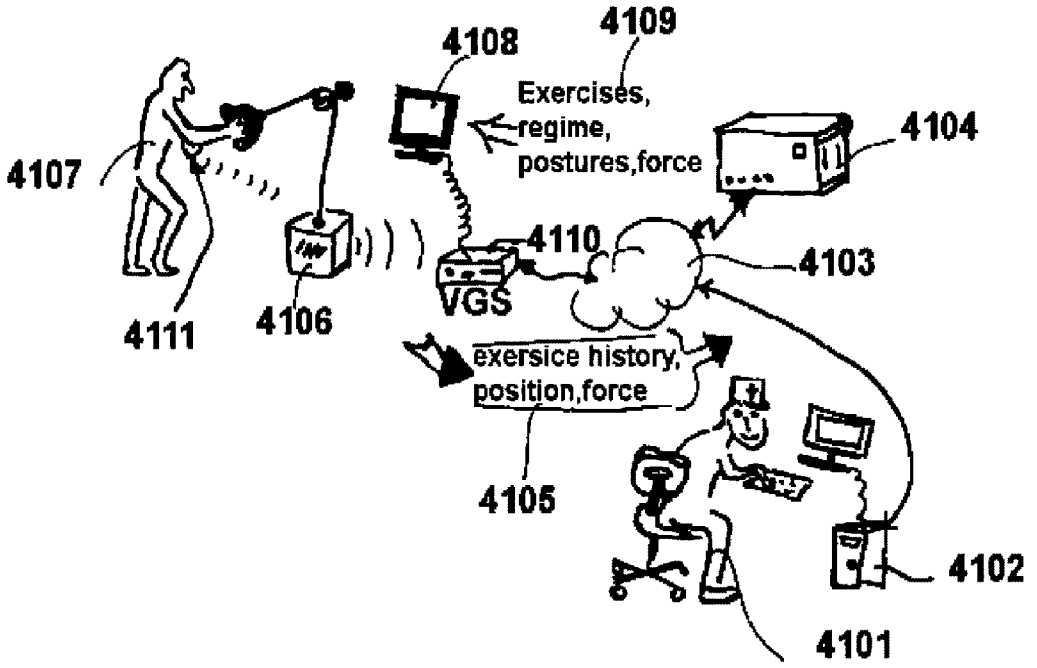
4108
4109
Exercises,
regime,
postures,force
4104
4107
4110
4103
VGS
4111
4106
exersice history,
position,force
4105
4102
4101

Figure 41

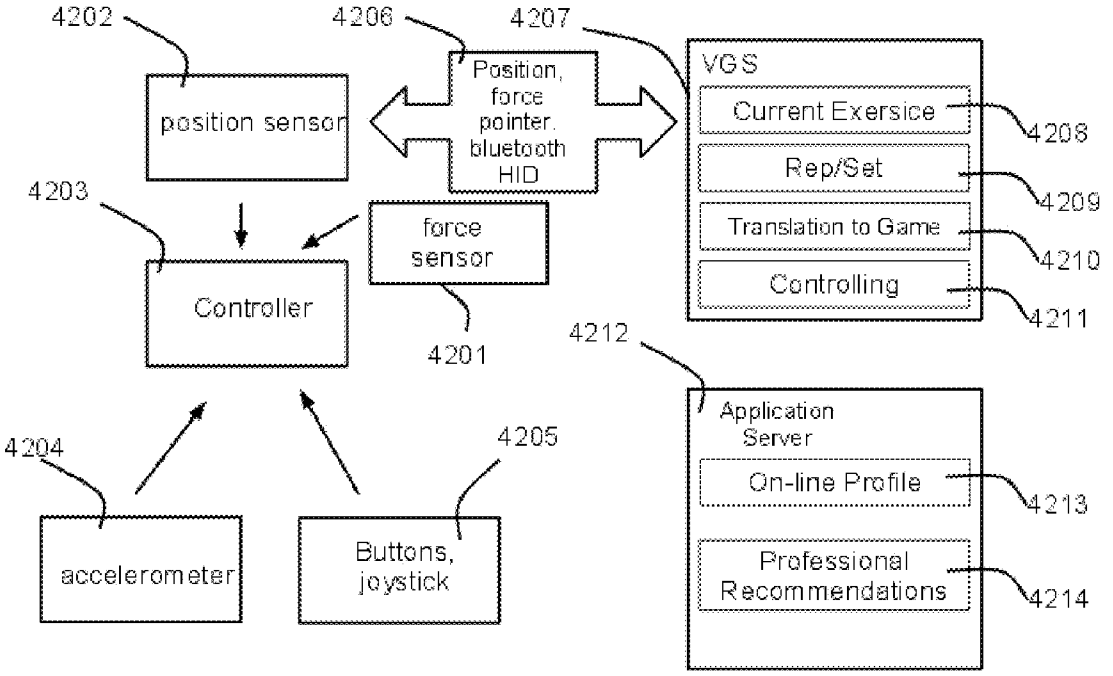
4202
4206
4207
position sensor
Position, force pointer, bluetooth HID
VGS
Current Exersice
4208
Rep/Set
4209
Translation to Game
4210
Controlling
4211
4203
Controller
force sensor
4201
4212
Application Server
On-line Profile
4213
Professional Recommendations
4214
4204
4205
accelerometer
Buttons, joystick

Figure 42

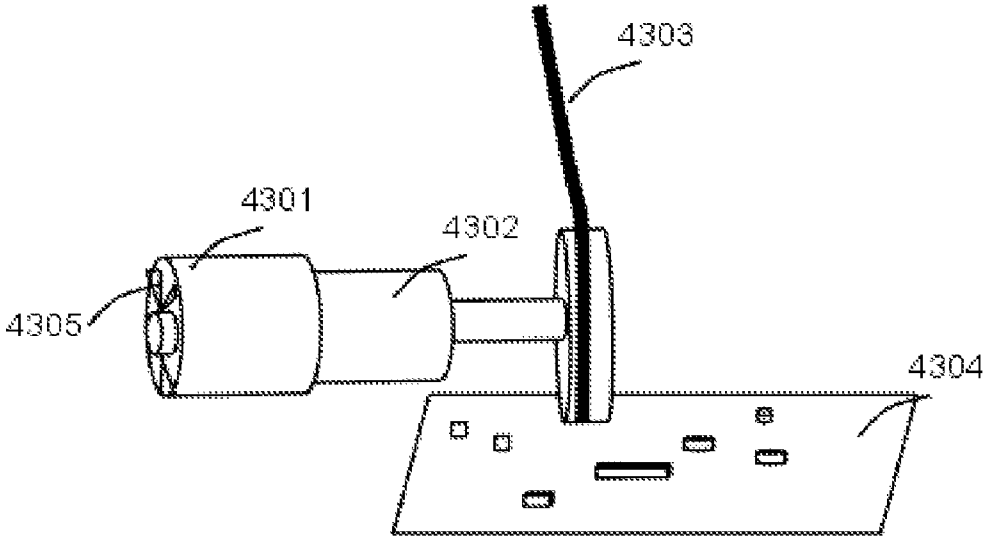

Figure 43

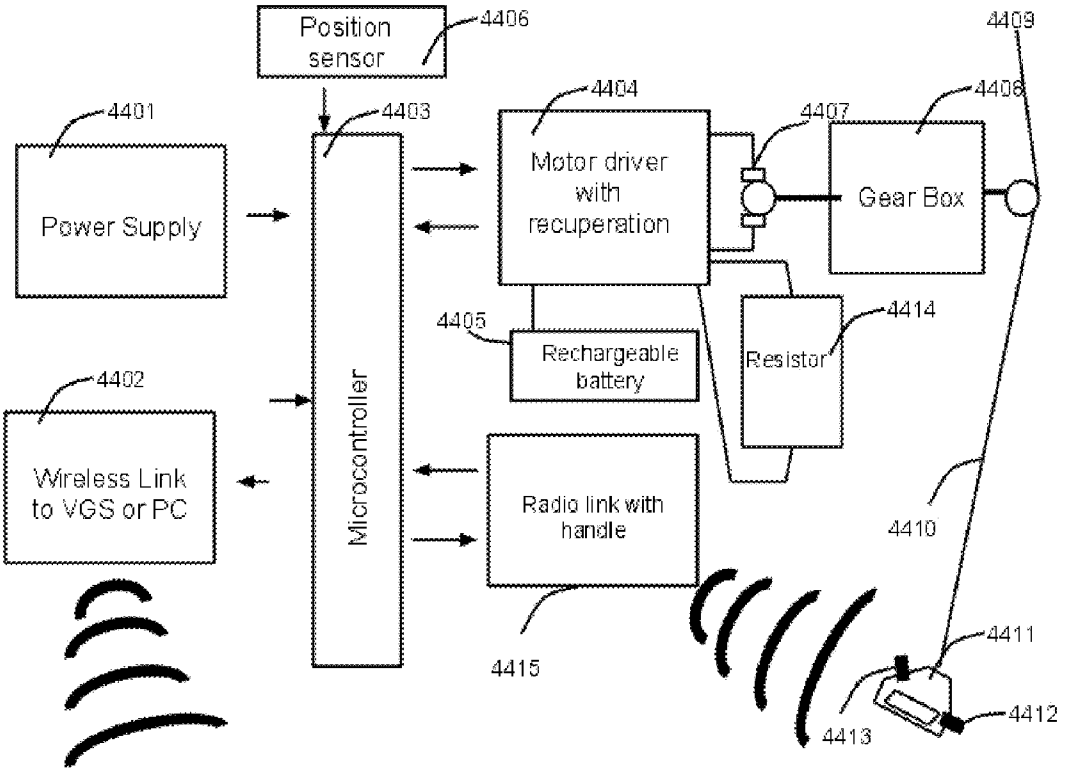
Position sensor
4406
4409
4401
4403
4404
4407
4408
Power Supply
Motor driver with recuperation
Gear Box
4405
Rechargeable battery
Resistor
4414
4402
Wireless Link to VGS or PC
Microcontroller
Radio link with handle
4410
4415
4411
4413
4412

Figure 44

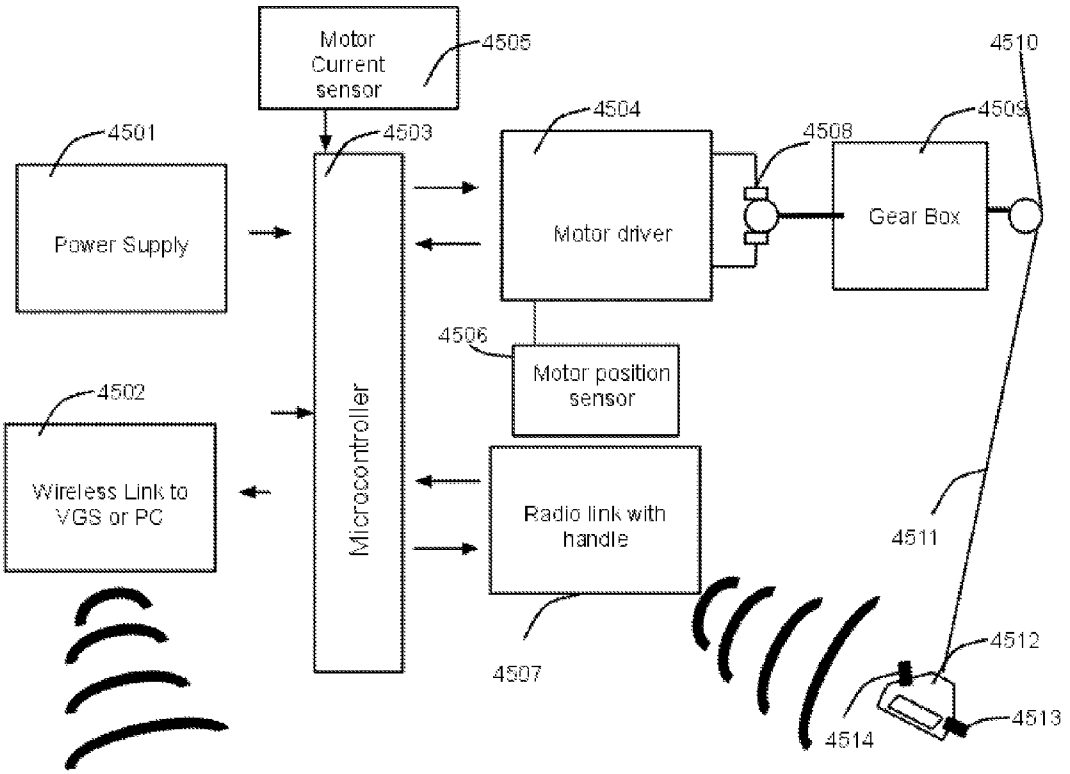
Motor Current sensor
4505
4510
4504
4509
4501
4503
4508
Power Supply
Motor driver
Gear Box
4506
Motor position sensor
4502
Microcontroller
Wireless Link to VGS or PC
Radio link with handle
4511
4512
4507
4513
4514

Figure 45

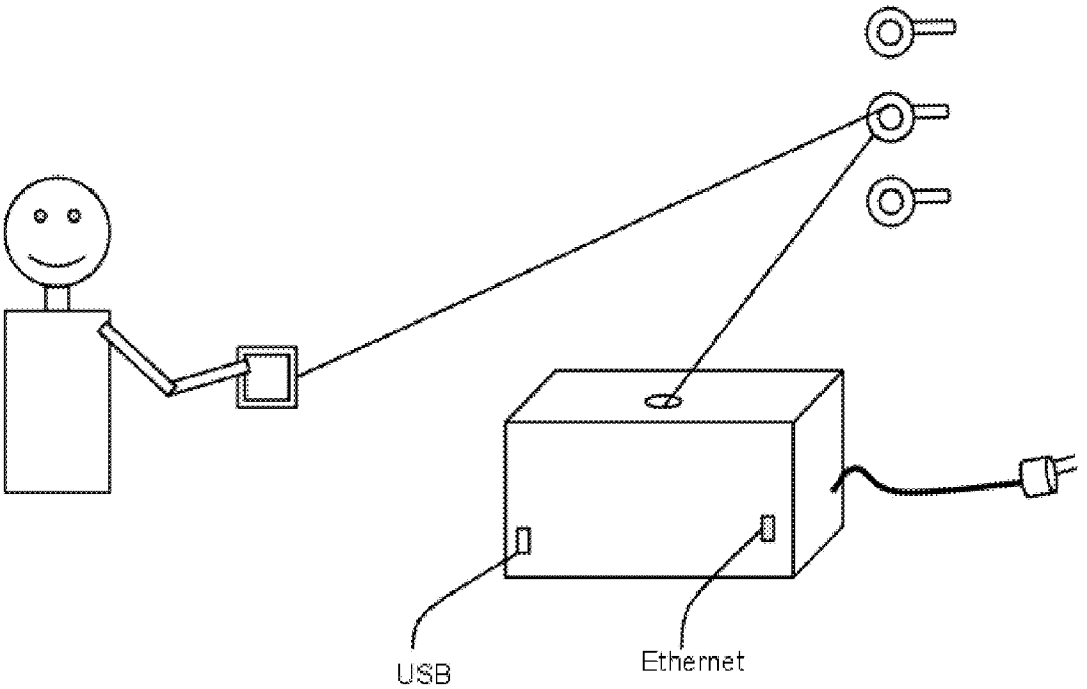

Figure 46

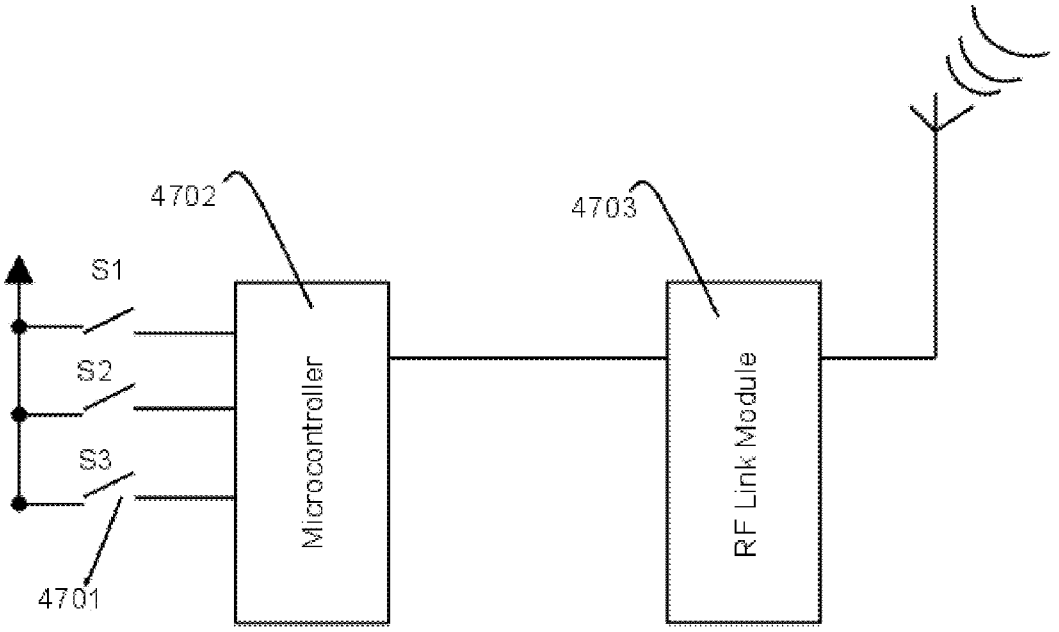

S1...S3 reed switches

Figure 47

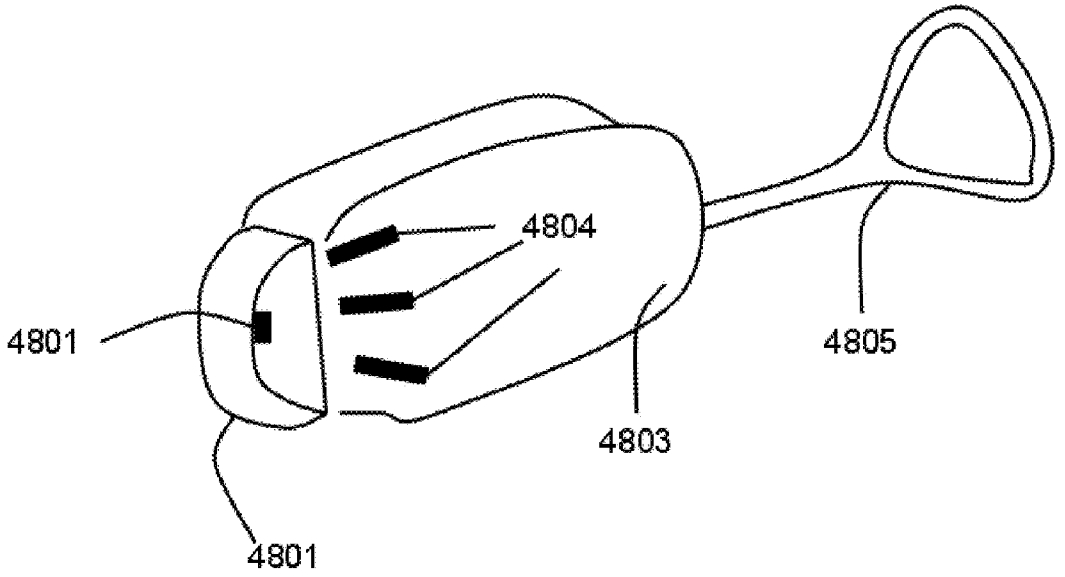

Figure 48

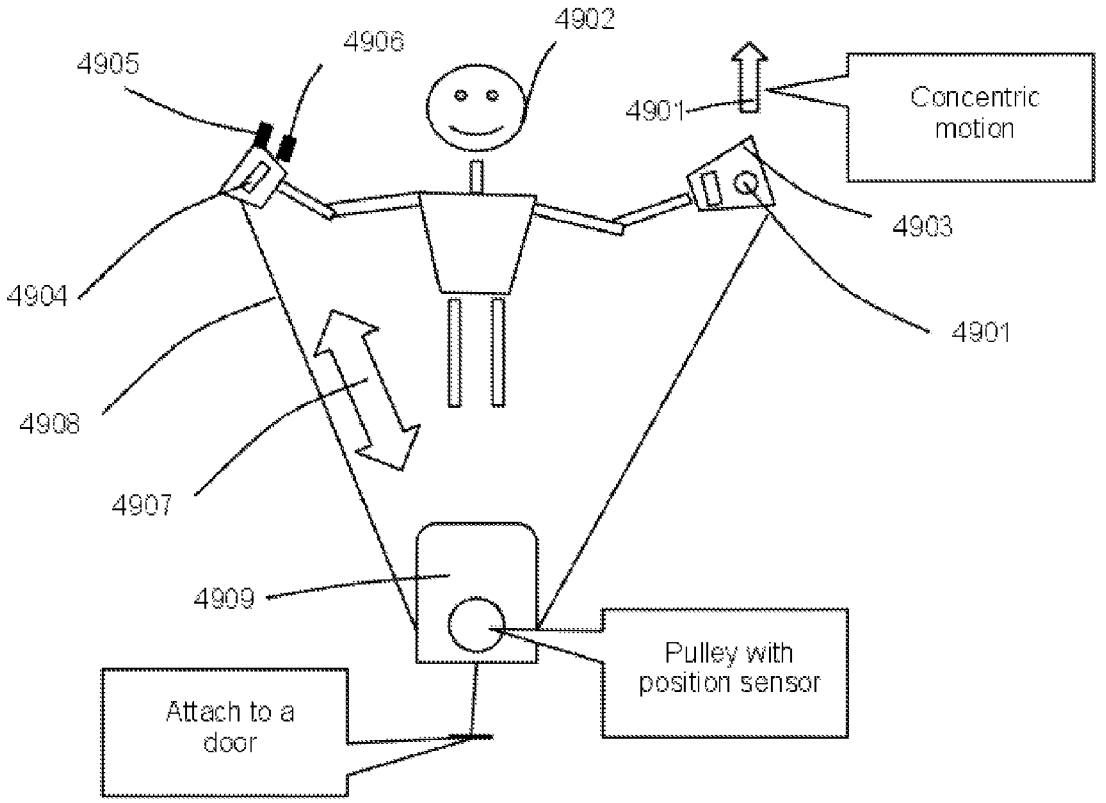
4902
4906
4905
4901
Concentric motion
4903
4904
4901
4908
4907
4909
Pulley with position sensor
Attach to a door

Fig 49

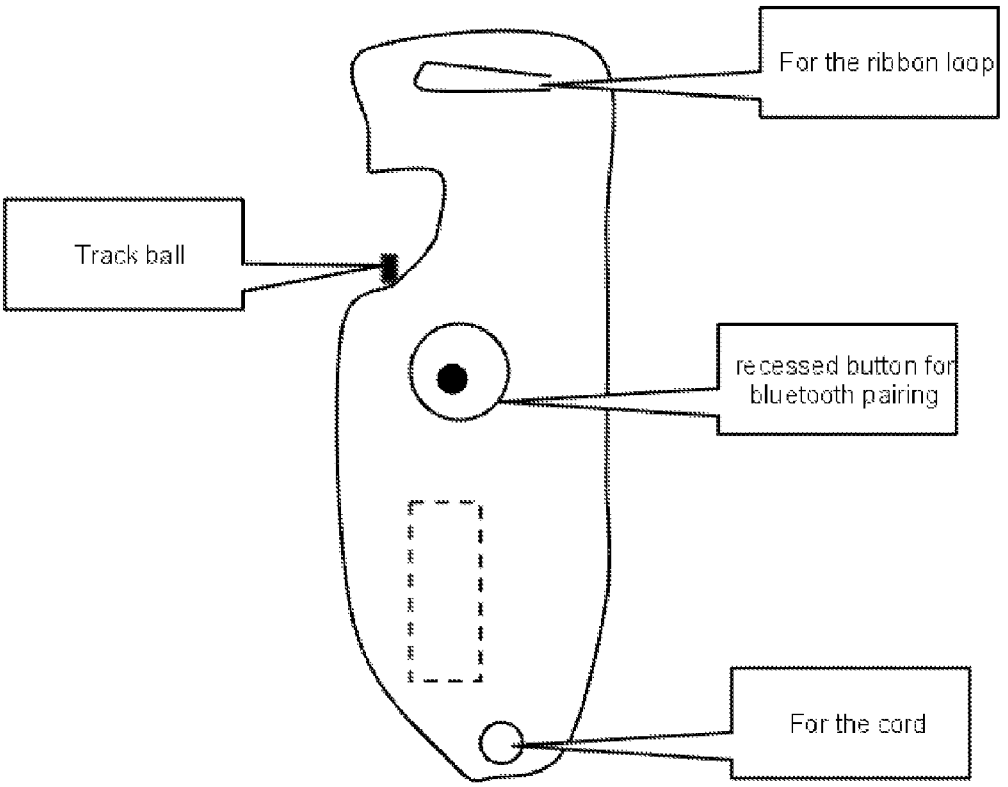
For the ribbon loop
Track ball
recessed button for bluetooth pairing
For the cord

Fig 50

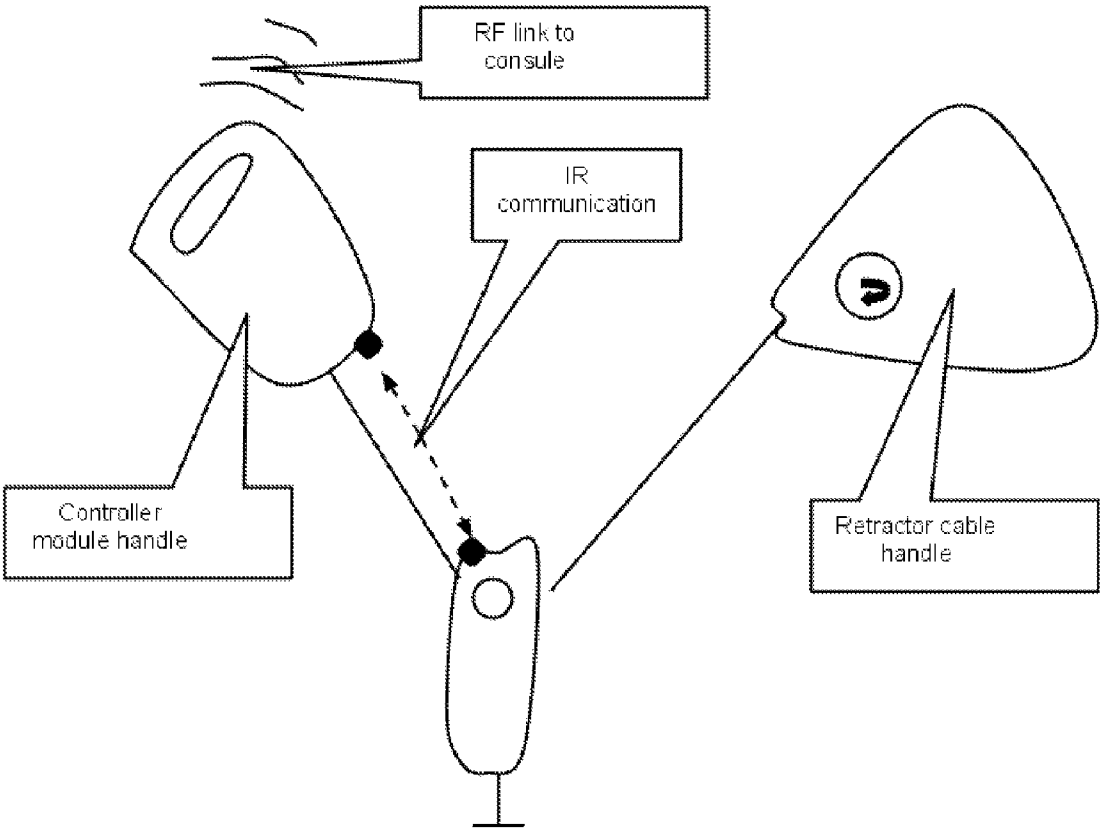
RF link to
consule
IR
communication
Controller
module handle
Retractor cable
handle

Fig 51

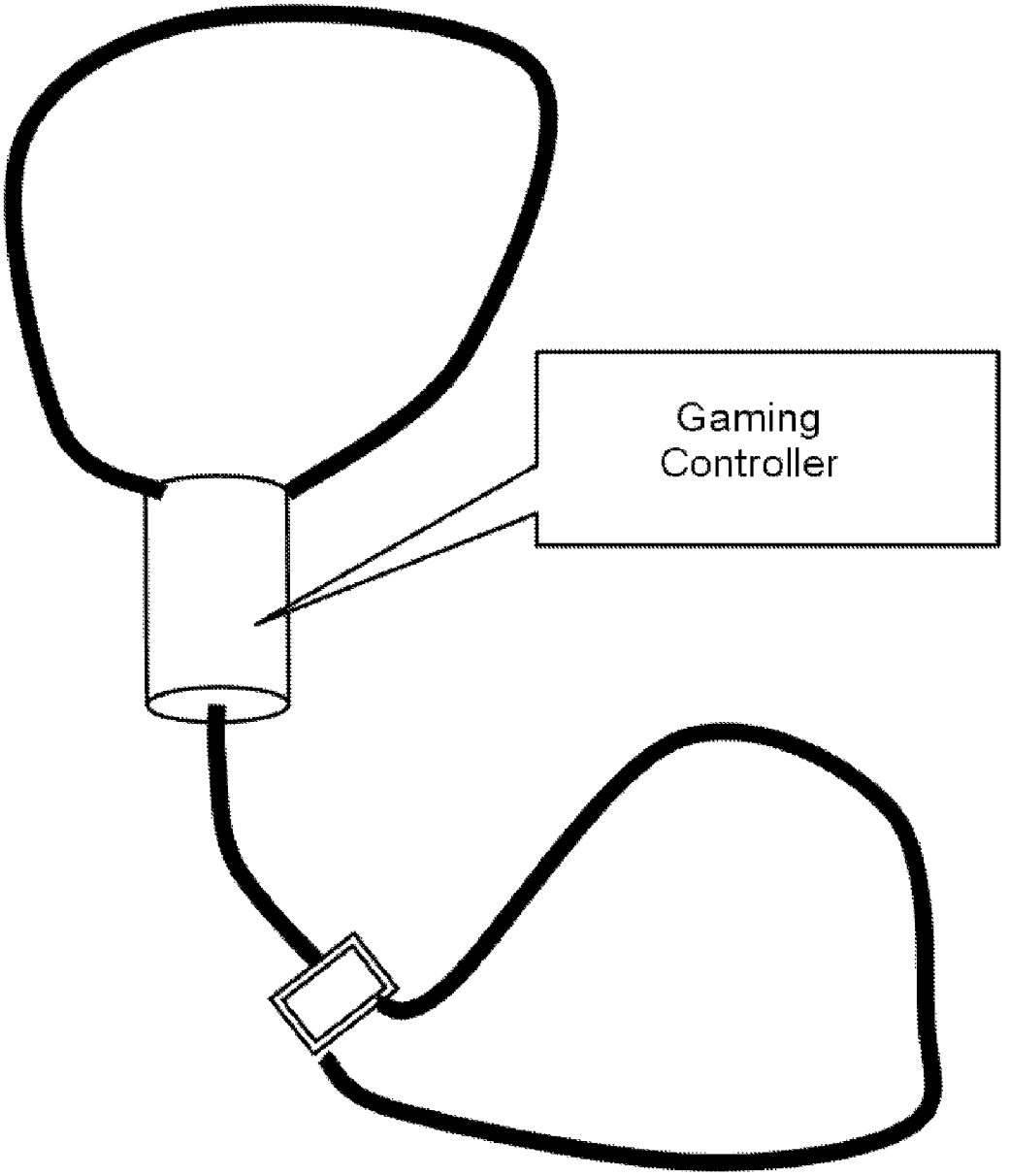

Fig 52

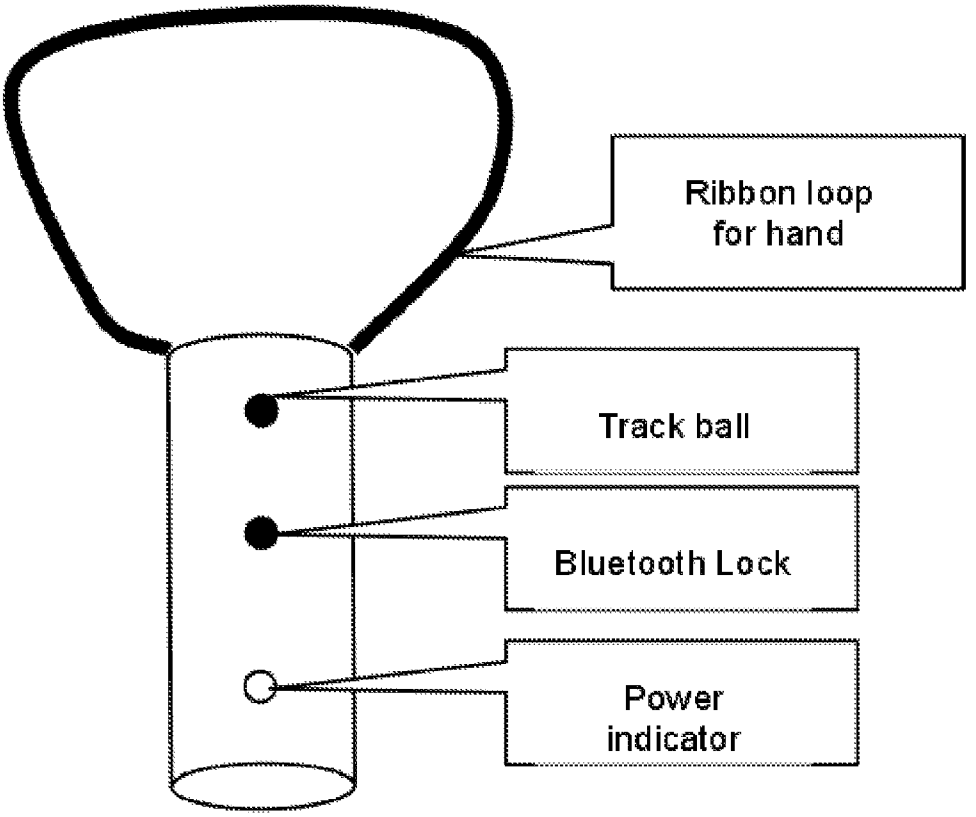
Ribbon loop
for hand
Track ball
Bluetooth Lock
Power
indicator

Fig 53

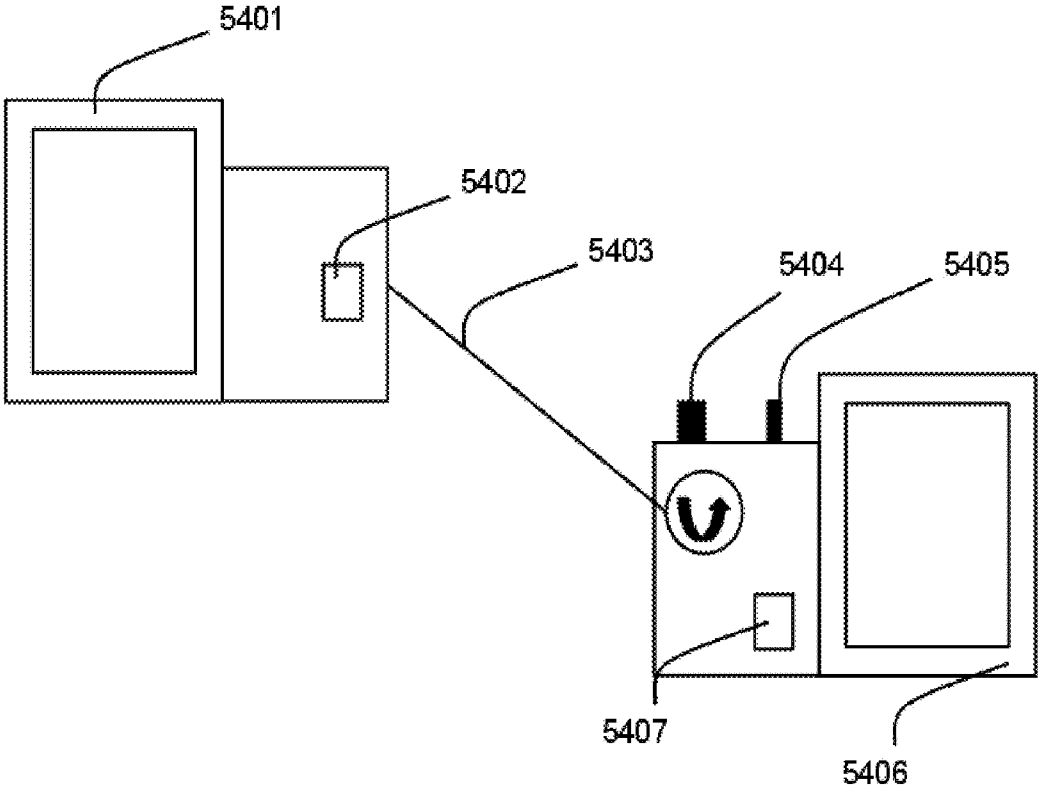

Figure 54

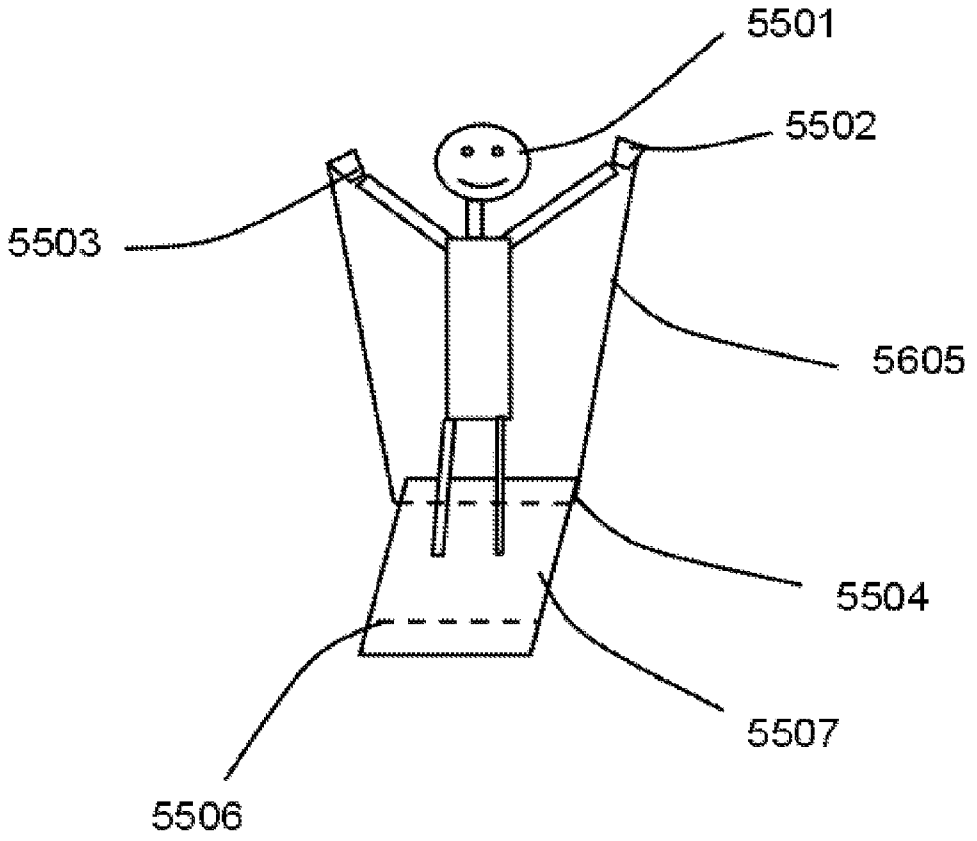

Fig 55

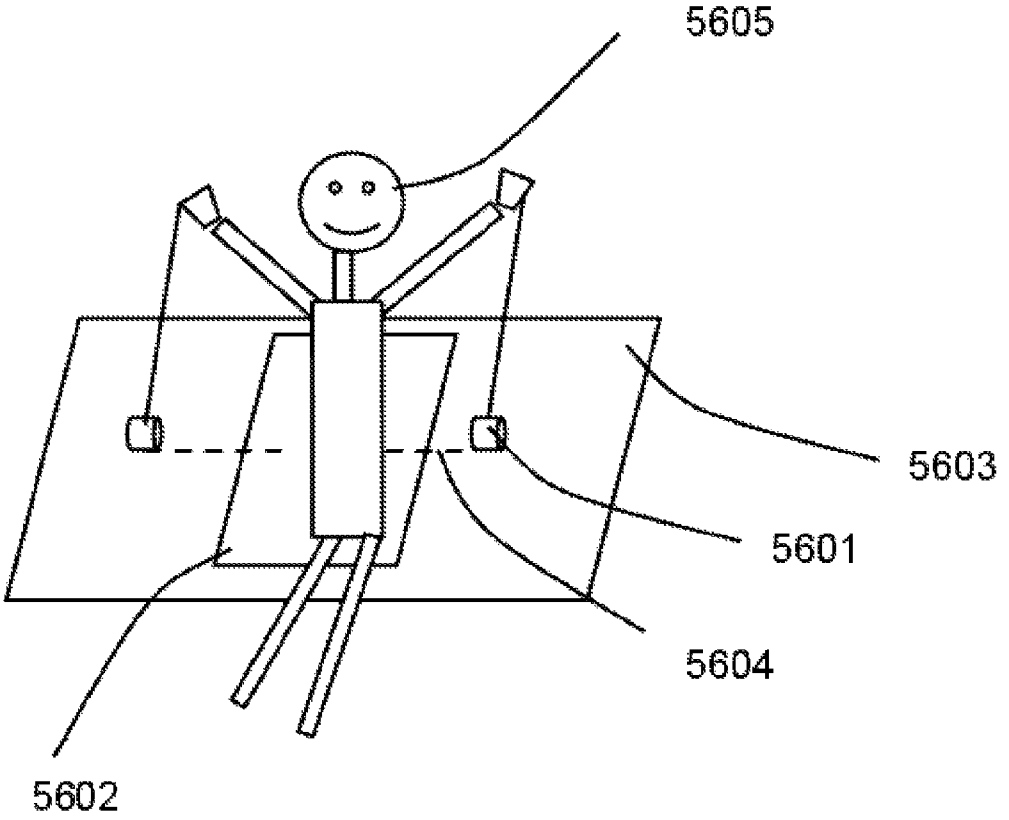

Fig 56

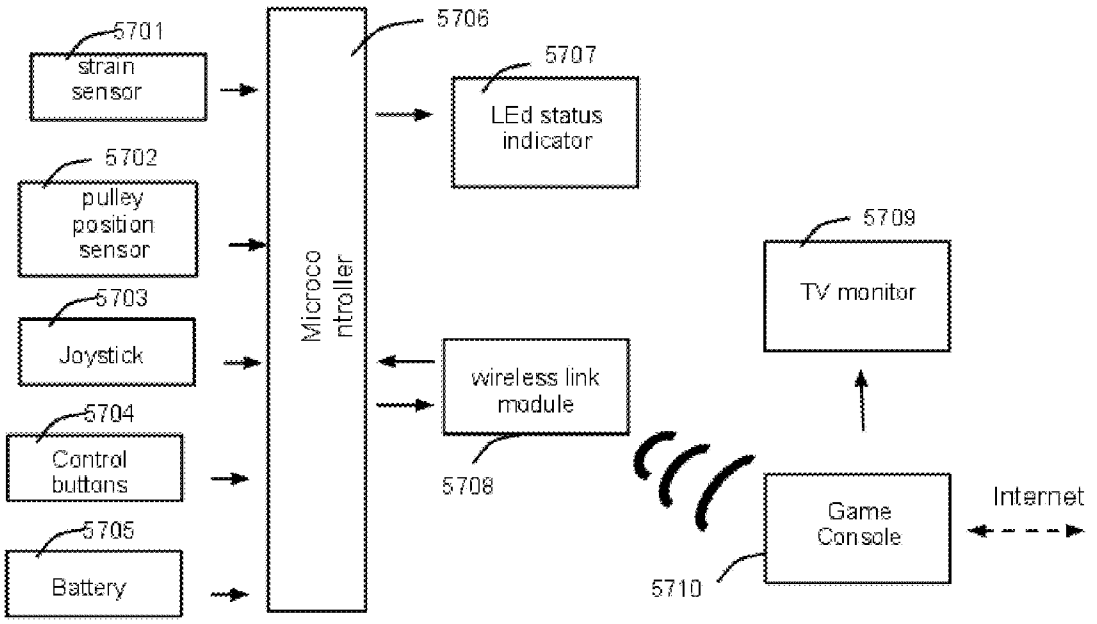
5701
strain sensor
5702
pulley position sensor
5703
Joystick
5704
Control buttons
5705
Battery
5706
Microco ntroller
5707
LEd status indicator
wireless link module
5708
5709
TV monitor
Game Console
5710
Internet

Figure 57

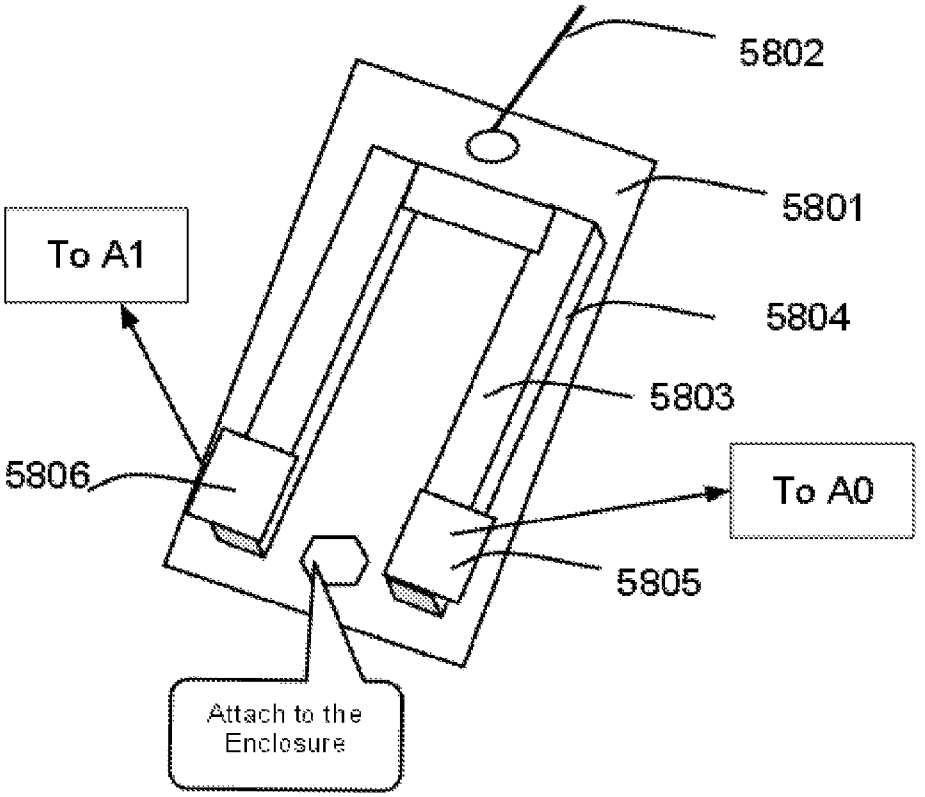
5802
5801
To A1
5804
5803
5806
To A0
5805
Attach to the Enclosure

Fig 58

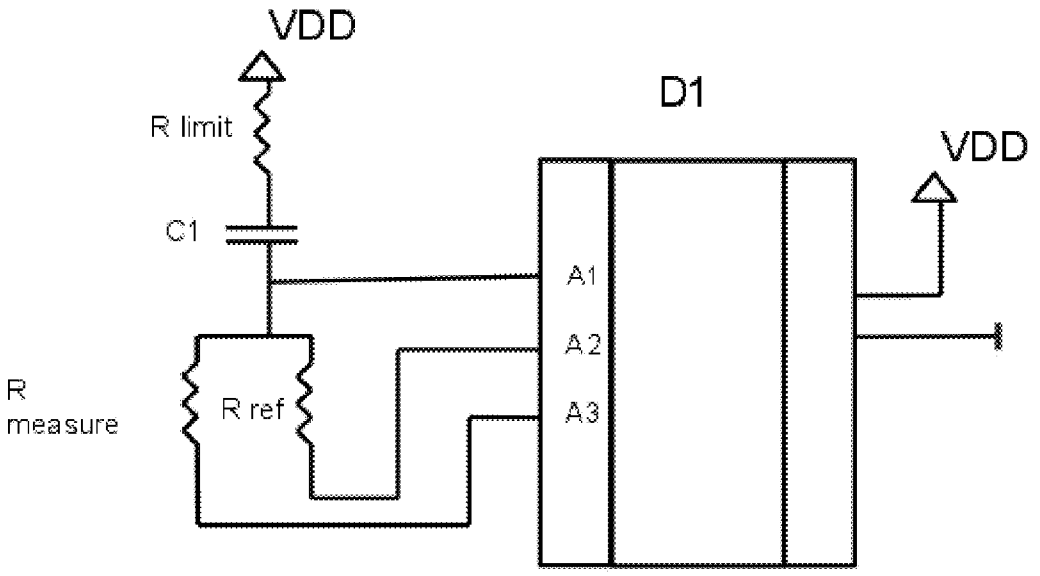

Figure 59

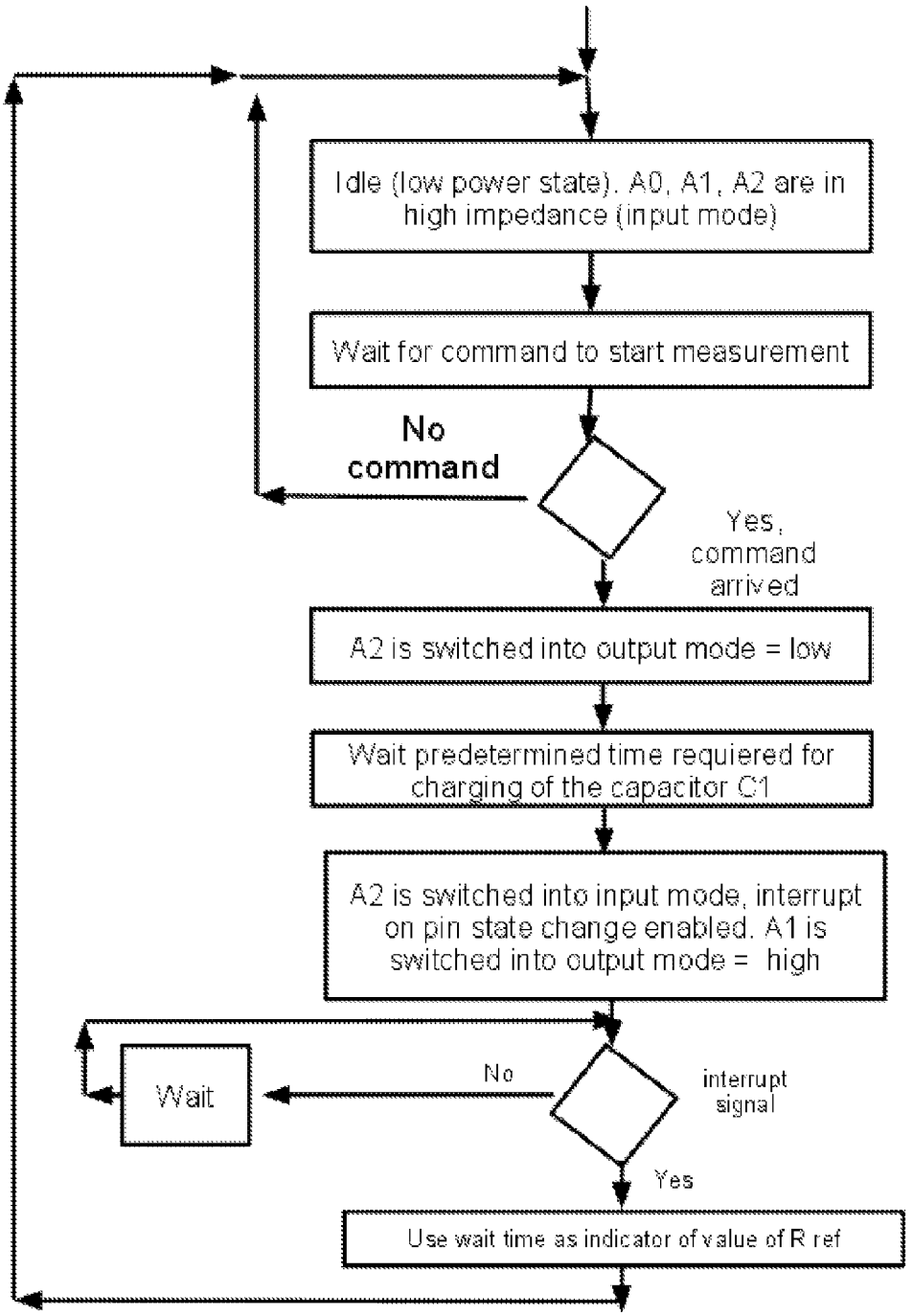
Idle (low power state). A0, A1, A2 are in high impedance (input mode)
Wait for command to start measurement
No command
Yes, command arrived
A2 is switched into output mode = low
Wait predetermined time requiered for charging of the capacitor C1
A2 is switched into input mode, interrupt on pin state change enabled. A1 is switched into output mode = high
Wait
No
interrupt signal
Yes
Use wait time as indicator of value of R ref

Figure 60

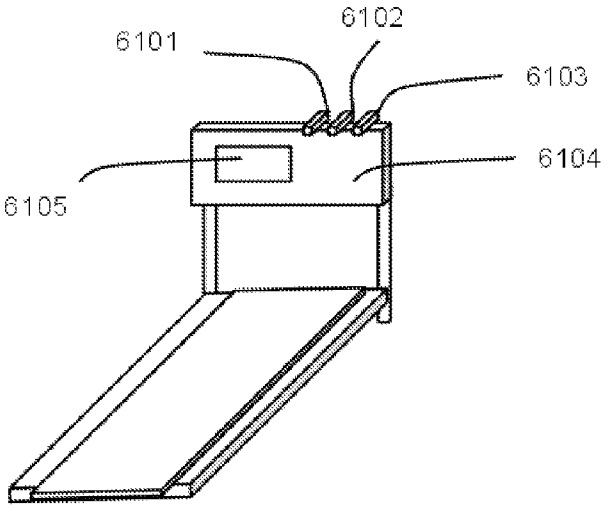

Figure 61

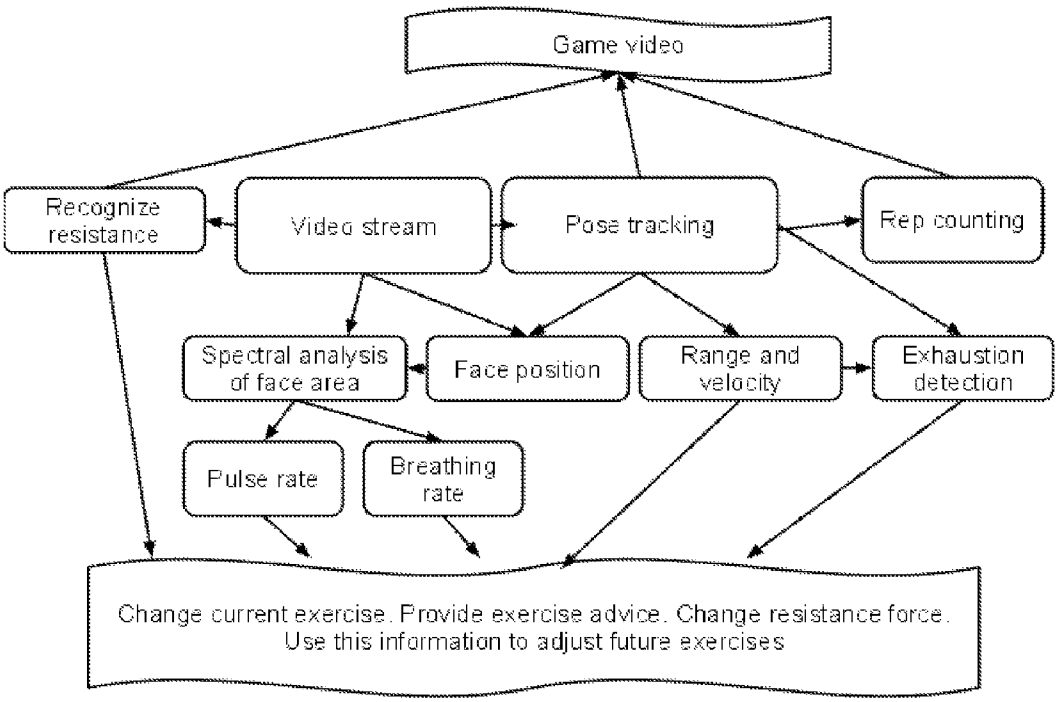

Figure 62

METHOD AND APPARATUS FOR FACILITATING STRENGTH TRAINING

CLAIM OF PRIORITY

This application is a continuation in part of U.S. Utility application Ser. No. 12/618,680 filed Nov. 13, 2009 that claims priority under 35 USC Section 119(a) from U.S. Provisional Application No. 61/115,082, filed Nov. 16, 2008.

This application further claims priority under 35 USC Section 119(a) from U.S. Provisional Application No. 61/346,865, filed May 20, 2010.

All the above mentioned applications are hereby incorporated by reference in their entirety.

BACKGROUND OF THE INVENTION

Recently, a number of exercise and fitness computer and video games emerged. Wii Fit and related games uses Nintendo Wii video gaming system and Wii Balance board peripheral. The exemplary games include Electronics Arts Sports Active 2, The biggest loser challenge, Active Life Explorer, Just Dance 2, Wii Fit Plus, Walk It out, Zumba Fitness, NFL training camp, etc. A number of games uses Microsoft Kinect peripheral for XBOX 360 video gaming system. Microsoft Kinect uses a video camera to track player pose and enable interaction with the player. Examples of game titles for Microsoft Kinect include Your Shape Fitness Evolved, Zumba Fitness, The biggest loser challenge Ultimate, Electronics Arts Sports Active, etc. A growing number of video games relies on smartphones and tablets as a video gaming system. Examples include Walk n'Play, Wellness Workout, Runkeeper Pro, etc. Some game, such as YourSelf fitness use home computer as a video gaming system.

The video games mentioned above direct user through various aerobic and strength training exercises and incorporate the exercises into various fun activities.

Strength training and aerobic exercises are two distinct kind of exercises with distinct training machines and techniques. Aerobic training involves long-term repetitive use of non-specific large muscle groups aiming at targeting cardiac and pulmonary systems. In contrast, strength training (strengthening) involves generation of a contraction of a specific muscle(s) for a number of repetitions and sets to quickly exhaust the muscle(s) aiming at increasing strength of the muscle(s).

Efficient strengthening requires manipulation of resistance and exercise regime. Some of the exercise, such as pull ups, push ups, squats, etc use just body weight to provide resistance force. However, most of efficient exercise regimes require use of resistance devices, such as dumbbells, resistance bands, isometric exercise devices, strength training machines, and so on.

Existing exercise video games provide a lot of capabilities to enable aerobics exercises. Most of the games enable strength training where body mass is used as resistance. Some of the games encourages uses of a limited number of resistance devices (free weights, resistance bands). However, those games are not aware of the level of resistance provided nor can control it, that prevents from engaging in an efficient strength training exercise regime.

None of the existing games on the market provides balance between exercise and entertaining activities. User may become focused on entertaining activity or specific exercise at the expense of balanced and efficient exercise regime.

Various types of exercise equipment have been developed for muscle building and toning, whether ultimately used as a sport or for physical therapy.

- Resistance exercise machines use various sources of resistance (gravity, friction, hydraulics, etc), and a combination of simple machines to convey that resistance to the person using the machine. Each of the simple machines (pulley, lever, wheel, incline) changes the mechanical advantage of the overall machine. Most exercise machines incorporate an Ergo-meter. An Ergo-meter is an apparatus for measuring the work a person exerts while exercising as used in training or medical tests.
- Endless-path machines: Running/Walking machines (treadmills), elliptical, glider, climbing machines and stationary bicycles. The treadmill is one of the most popular endless-pass machines. It provides a moving platform with a wide Conveyor belt and an electric motor or a flywheel.
- Rowing machines, also named rowers, simulate the body movements of using a rowing boat.
- Spine Exercisers: range of fitness machines which comprises two foot striding units and two hand striding units, the Spine Exercisers concentrate on exercising and strengthening the muscles of the spinal column and vertebrae joints with the spine in free horizontal position.
- Spinning ropes, boxing gloves, punching bags for kickboxing and Mixed Martial Arts.
- Wii Fit,—an exercise game consisting of activities using the Wii Balance Board peripheral. Training on Wii Fit is divided into four categories: yoga, strength training, aerobics, and balance games. The activities provide a core workout, emphasizing controlled movements rather than overexertion
- Nautilus® Nitro style equipment: During any exercise, an individuals' strength varies at different points. Other machines don't address this strength curve—instead, the weight remains constant from beginning to end. This can limit muscle recruitment and overall performance. This system is driven by a four-bar linkage system, cam design, or a combination of both, which enables matching of the body's potential increases and decreases in strength.

One of the more common types of exercise equipment is the weight type device which uses weights to provide the necessary resistance. As is well known, these weight type devices have several disadvantages. They are cumbersome to move since they are generally associated with a frame and bench assembly and the weights need to be moved when the equipment is moved. In addition, these devices may cause injury to an inexperienced user since the weights may be dropped suddenly. Further, when weights are lifted an inertia of movement is created which tends to provide unevenness in the operating resistance during the exercising process.

An issue with those machines is that the velocity at which the weight is moved is controlled by the user. Many, if not most, users will move the weight at a velocity which is too fast for optimum muscle development.

Another problem is that the weight which is lowered is the same as the weight which is lifted, even though the muscles are capable of controlled lowering of a larger weight than they can lift. This controlled lowering of a weight, or negative resistance, is the most beneficial exercise for developing strength.

It is also desirable to perform a number of repetitions of each exercise, such as eight to twelve, so as to fatigue the muscle(s) being exercised. Because the capability of the muscles to perform the exercise decreases with each repeti-

tion, a weight which is less than the maximum which can be lifted is usually selected for the exercise. A preferred form is to have the weight for each repetition to be the maximum for that repetition; i.e. the weight should change with each repetition.

The therapeutic exercise is the prescription of bodily movement to correct an impairment, improve musculoskeletal function, or maintain a state of well-being. It may vary from highly selected activities restricted to specific muscles or parts of the body, to general and vigorous activities that can return a convalescing patient to the peak of physical condition.

Therapeutic exercise seeks to accomplish the following goals

- Correct abnormal movement patterns and co-contractions;
- Facilitate movement of limbs in prescribed range
- Allow prescribed resistance to be used during each specific exercise. Release contracted muscles, tendons, and fascia;
- Improve coordination;
- Reduce rigidity
- Improve balance
- Promote relaxation
- Improve muscle strength and, if possible, achieve and maintain maximal voluntary contractile force (MVC)
- Improve exercise performance and functional capacity (endurance)

There is considerable effort to couple exercise devices with various video gaming systems. The shining example of commercial success in this direction is Nintendo's WII fit, which uses balance board and a simple remote controller to drive interactive games and virtual personal training. The success of WII fit is based on the facts that (a) is a gadget (small, non-expensive) (b) it is easy to use (c) it is coupled with highly interactive and entertaining gaming activity. However, WII Fit does not provide resistance. The resistance exercises are limited to the situations when user's own weight, power cable, or dumbbells are providing resistance. The resistance cannot be controlled by video gaming system

Although they are not yet reached the commercial mainstream, there are a lot of designs of aerobic exercise equipment that provide for connection with video gaming system. The parameters of aerobic exercise equipment (e.g., brake force for a bike or belt speed for a treadmill) are relatively easy to adjust by an electronic control. On other hand, the information on progress of the exercise, e.g. distance or calories burned, is easy to compute and feed to a video gaming system.

Strength training is equipment is more difficult to couple with video gaming system. First of all, strength training normally require repetitions comprising of concentric and eccentric phases. For an efficient exercise, resistance shall be dependent on one or many of the following: position, repetition number, velocity.

U.S. Pat. No. 7,278,958 to Morgan describes variable resistance strength training machine. The variation of resistance is achieved by mechanically adjusting able pulley system. The adjustment process is initiated by a human. The machine still requires weight stack and frame and does not coupled with a video gaming system.

U.S. Pat. No. 4,512,567, Phillips, entitled "Exercise Bicycle Apparatus Particularly Adapted for Controlling Video Games," issued Apr. 23, 1985. This patent shows an exercise bicycle that is used to control and fully operate a video game by use of electrical signals. These electrical signals are based on the motion of the handlebars as well as signals proportional to the speed at which the bicycle is being operated. This invention requires the use of an electrical generator and is limited to use with only exercise bicycles.

U.S. Pat. No. 5,645,513 to Haydocy et al. teaches an exercise bike that controls video gaming system, providing game level rewards for achievement during exercise. It limited to aerobic exercise, requires a bulky exercise machine and does not provide for adjusting of exercise equipment parameters by video gaming system.

U.S. Pat. No. 6,749,537 to Hickman shows an exercise equipment connected to a local computer, which is in turn connected to a remote system. The patent teaches control of equipment resistance (e.g., exercise bike brake) by a computer system, and provides means for virtual group exercise. The patent does not teach energy recuperation during strength trainings repetitions, nor provide means for reinforcing video game environment nor automated personal training during exercise

U.S. Pat. No. 4,235,437, Ruis et al, entitled "Robotic Exercise Machine and Method", discloses a hydraulic driven and controlled apparatus which can be programmed to provide a number of different exercise paths for a user. These paths must be programmed for each new user by a trained technician. The device lacks the simplicity necessary for use in a health club or spa type environment. Moreover, two separately controlled, hydraulically driven links are required for its operation.

U.S. Pat. No. 4,919,418 to Miller, entitled "Computerized drive mechanism for exercise, physical therapy and rehabilitation", discloses a microcontroller based strength training machine that provide for both concentric and eccentric exercise. The control is limited to providing constant velocity during repetitions. The patent does not teach energy recuperation during concentric/eccentric repetitions, nor a connection with video gaming system. The device is bulky and can not be used as a gadget.

U.S. Pat. No. 4,880,230 to Cook teaches a pre-electronic era pneumatic strength training gadget. Device allows to manually adjust resistance, separately for forward and backward movement. However, this invention does not provide for eccentric exercise, Nautilus style exercise, nor for a connection to video gaming system.

None of the prior art is concerned with provision of a resistance based strength training closely coupled with a video gaming system that provides a reinforcing video game or a coaching.

DEFINITIONS

A video gaming system is an interactive entertainment computer or electronic device that produces a video display signal which can be used with a display device (a television, monitor, etc.) to display a video game or directly on a portable device like smart phone or PDA (Personal Digital Assistant). The term "video game console" is used to distinguish a machine designed for consumers to buy and use solely for playing video games from a personal computer, which has many other functions. In the invention, video gaming system is operated to run either entertainment (game), physical training or therapeutic software. video gaming system can be connected to the Internet. The software can be further configured to interact with peer systems or central server to exercise history, settings. In addition to operative connection with the exercise equipment. video gaming system can be coupled with general purpose (key board, mouse, monitor, joystick, camera, microphone) and specialized (position sensors, accelerometers, voltage sensors, heart rate monitors, blood pressure modules) peripheral devices. The exercise

software can either reside on video gaming system system or on the server, in the later case the use experience will be provided by some thin client (e.g, browser or Java). video gaming system is distinguishable from specialized exercise computers; as video gaming system can normally be configured to run non only the exercise software, but other games or general purpose software (media player, Internet browser, office productivity suite, etc). For further clarity, WII, XBox, Playstation, Personal computer, netbook, smartphone are examples of video gaming system, while computer embedded into treadmill for entertainment or control is not a video gaming system. In some embodiments, the video gaming system comprises a thin device in a proximity to the exercise person and a cloud. For example, a smart phone or Chrome based notebook can actually perform minimum of the computations locally and the rest can be performed by the cloud. Such configurations fell within the scope of invention.

Pose tracking is a computer vision technique that allows to trace movement of body parts based on the input from video cameras. The review of various vision based pose tracking techniques can be found in the paper "A Survey of Computer Vision-Based Human Motion Capture" by Thomas B. Moeslund and Erik Granum, Computer Vision and Image Understanding Volume 104, Issues 2-3, November-December 2006, Pages 90-126, which is incorporated here by reference. Fiduciary marks are frequently used to increase the quality of pose tracking and reduce computational requirements. Pose tracking can also be achieved by attaching accelerometers to the body parts of interest and integrating their signals.

Virtual group exercise—users can either see their "virtual images", or see each other by video link, or see each other progress. Users can either exercise simultaneously or independently. The exercise can be organized as a competition or tournament.

Strength training is the use of resistance to muscular contraction to build the strength, anaerobic endurance and size of skeletal muscles. The basic principles of strength training involve a manipulation of the number of repetitions (reps), sets, tempo, exercises and force to cause desired changes in strength, endurance, size or shape by overloading of a group of muscles. Typically, each rep contains a concentric and eccentric steps, where

Concentric-exercise where there is movement in the direction force is applied. (For example when a bar bell is lifted from the floor.)

Eccentric-exercise where there is movement in the direction opposite to the direction of the force applied. (For example when a bar bell is lowered to the floor.)

Isokinetic-exercise where the speed of exercise motion is held constant during a dynamic contraction, so that external resistive force varies in response to magnitude of muscular force.

Isometric-exercise where the speed of exercise motion is substantially zero.

Integrated electrical motor/alternator—an electric mechanical device whose rotor is coupled to a resistance cable. It is used as an electric drive and also as a recuperative brake. Brake energy is converted into electric energy and stored in a battery using an intelligent energy management. Thus, the energy can later be reused for creating of a torque assist or for providing a service driving functions to adjust the resistance cable position and length. The ultra-capacitor could be used instead of or as an addition to the battery. It is capable to deliver up to 10 times the power and longevity of batteries, requires no maintenance and operate reliably in extreme temperatures and vibrations.

Exercise professional: coach, experienced peer or friend, physiotherapist, kinesiologist, personal trainer, etc.

Adjustable resistance—resistance that can be easily adjusted between exercise sets.

Variable resistance—resistance that can be varied within individual rep, for example to emulate Nautilus style equipment or force isokinetic exercise.

BRIEF SUMMARY OF THE INVENTION

An aspect of the invention is that a video gaming system facilitates strength training exercise and monitors it's progress and is aware of at least approximate resistance force magnitude during the exercise.

An aspect of the invention is that the awareness is achieved by communication of information with the exercise device. In some embodiments, the video gaming system controls or adjust the resistance by sending a signal, for example a digital wireless signal to the strength training machine. The signal may either specify a resistance setting, or a force curve, or be an applet with program or byte code programming the response. In some embodiments, the strength training machine sends a signal, for example a digital wireless signal, indicative of resistance settings or current resistance. In some embodiments, a two way communication is established. In other embodiments, the communication of information is enabled by sensing techniques, for example computer vision. In an embodiments, the software on video gaming system uses a signal from a coupled video camera to analyze the image or video signal, and applies segmentation and computer vision techniques to recognize the selected exercise object or it's settings or use.

In an embodiment, the exercise progress monitoring is achieved by receiving a signal, for example a digital wireless signal, from the exercise device. For example, the exercise device may have an accelerometer, and the information about velocity and integrated position is transmitted to the video gaming system.

In an embodiment, the exercise progress monitoring is achieved by using pose tracking techniques from a video signal using a video camera coupled with the video gaming system. The techniques for exercise progress monitoring could be combined.

In an embodiment, the data of exercise progress monitoring are used to coach user on exercise techniques. For example, the video gaming system can generate an audio or video signal advising user to improve posture, movement of range, and velocity.

An aspect of the invention is that the video gaming systems monitors the velocity during strength training exercise, and generates a signal aiming at achieving a proper velocity. In an embodiment, the signal is audio or video signal advising user to improve exercise technique. In another embodiment, the signal is digital signals send to the strength training machine to adjust resistance. Both techniques could be used in a consent.

An aspect of the invention is that the video gaming system advantageously aware of at least one physiological parameter, for example heart rate, blood pressure, breathing rate, oxygen level in the blood, sugar level, etc. In an embodiment, a conventional sensor is attached to the player body. Conventional sensor might be either in a separate enclosure, or be part of an exercise device or game controller. The sensor sends the information to video gaming system over a digital wireless connection. In other embodiments, a non-contact to measure a physiological parameter advantageously used. For example, the data from a visible light or infrared video camera coupled

with a video gaming system could be analyzed to derive heart rate, breathing rate, and the dynamic of the oxygen level. The video gaming system is advantageously configured to use this information to adjust parameters of the current and/or future exercise to optimize workout effect and reduce the health risks. This is could be achieved by an audio or video indication to the user, or by adjustment of the resistance force by means of sending the signal to the strength training apparatus. The use of other computing devices that are not a video gaming system to use non-contact physiological parameter monitoring (for example, video camera based heart rate monitoring) to tune-up the exercise is an embodiment of this invention. Video camera can be an integral part of the video gaming system.

An aspect of the invention that the video gaming system advantageously configured to estimate the level of exhaustion of the user during the exercise, and advantageously uses this information to adjust parameters of the current and/or future exercise to optimize workout effect and reduce the health risks. This could be achieved by an audio or video indication to the user, or by adjustment of the resistance force by means of sending the signal to the strength training apparatus.

An aspect of the invention that the video gaming system is configured to use monitored parameters to prompt user to adjust exercise technique, such as velocity, range of motion, posture, or effort.

An aspect of this invention is that the video gaming system is advantageously configured to use information about progress and time spent during exercise to control a non-directly related activity, for example access to video games or movies, the ratings of movies or artifacts in video games, etc.

An aspect of this invention that the strength training apparatus is configured to pulsate (vibrate) resistance by changing it's magnitude (or even dropping it's to zero). The pose tracking and exercise monitoring information is advantageously used by the video gaming system to control the pulsation to optimize workout effect and reduce the health risks.

An aspect of the invention is a game controller that can provide variable or adjustable resistance during strength training exercise and therefore forms a strength training machine. The machine is coupled with off-the shelf video gaming system (video gaming system). It could be coupled by a Bluetooth, Zigbee, or TCP/IP over a WiFI wireless connection, or through a wired interface such as USB. video gaming system is off the shelf game console (such as Xbox 360 or WII), or personal computing device, such as desktop computer, notebook, netbook, smartphone, or smart book.

It is another aspect of this invention that the controller can provide variable resistance by utilizing a hydraulic apparatus, an electrical hoist, or an electrical linear actuator.

It is another aspect of this invention that video gaming system is configure to run software that supports user during exercise by providing a reinforcing video game experience and coaching the use.

It is another aspect of this invention that the said controller has a microcontroller, that manages the resistance provided to user and communicates with video gaming system. A microcontroller could be a tightly integrated device with wireless interfaces, ADCs and DACs, or on the alternative, a less integrated computing device that communicates through necessary peripherals through a bus. The microcontroller could be a high end application processor or basic 8-bit microcontroller dependent on the embodiment's needs. Microcontroller could be implemented in FPGA or ASIC.

It is aspect of this invention that microcontroller adjust the resistance based on one or more of the following: position, repetition number, type of exercise, user profile, velocity. Microcontroller could either compute the resistance independently, receive functional dependency from video gaming system, or just receive current force from video gaming system.

It is another aspect of this invention that the microcontroller transmits to video gaming system information on the user progress, such as force, velocity, position, number of repetitions, calories burned, or user's vital signs.

It is another aspect of this invention that the resistance is provided by electric motor configured to generate energy during concentric movement and to use energy during eccentric movement, and this energy is recuperated by storing in a super capacitor.

BRIEF DESCRIPTION OF THE DRAWINGS

FIG. **1** is overall view of invention when coupled with Nintendo WII.

FIG. **2** is overall view of the invention when coupled with a personal computer.

FIG. **3** is an overall view of alternative embodiment.

FIG. **4** is a diagram of the invention embodied as a wireless power cable with variable resistance.

FIG. **5** is an elastic (wrist or ankle) band to assist with video based pose tracking.

FIG. **6** is a pair of a weight training gloves to assist with video based pose tracking.

FIG. **7** is a schematic diagram for one of the embodiments.

FIG. **8** is a diagram of the invention embodied as a wireless power cable with adjustable resistance.

FIG. **9** is a graph of resistance force as a function of position during eccentric and concentric steps.

FIG. **10** is a known in the art hoist mechanism to provide variable resistance

FIG. **11** is a known in the art hydraulic mechanism to provide variable resistance.

FIG. **12** is a known in the art electric linear actuator mechanism to provide variable resistance.

FIG. **13** is an illustration of online wrestling enabled by the invention.

FIG. **14** is an exemplary layout of a screen during computer exercise or physiotherapy.

FIGS. **15-16** depict exemplary position/force magnitude curves ("force curve") for a strengthening exercise that provide massage of the toned muscle by varying of the force magnitude.

FIG. **17** depicts a dumbbell with barcode to facilitate weight recognition by a video camera equipped video gaming system.

FIG. **18** depicts user exercising with dumbbells while video camera coupled with a video gaming system tracks user posture and recognizes dumbbell weight based on the object of known size.

FIG. **19** depicts user exercising with resistance bands, where resistance is recognized using color coded objects.

FIG. **20** depicts user exercising with resistance bands, while the resistance level is recognized using color coded bands.

FIG. **21** depicts architecture to use points collected during exercise activity to control entertaining games.

FIG. **22** is a flow of strength training exercise coaching by a processor of a video gaming system

FIG. **23** depicts a user exercising with a door gym

FIG. **24** depicts a user exercising with an isometric device

FIG. **25** depicts an exemplary screen of a video gaming system used to identify a user.

FIG. **26** depicts and exemplary screen of a video gaming system used to analyze user exercise needs.

FIG. **27** illustrates dataflow that could be used to compute plurality of exercise options and generate an audio or video signal prompting user to exercise.

FIG. **28** depicts an exemplary screen of a video gaming system used to identify a user.

FIG. **29** depicts an exemplary screen used by a video gaming system to suggest an exercise.

FIG. **30** depicts an exemplary screen used by a video gaming system to coach user to improve exercise technique.

FIG. **31** depicts and exemplary screen used by a video gaming system to suggest the user to change the resistance.

FIG. **32** depicts an exemplary screen used by a video gaming system to coach user to improve exercise technique.

FIG. **33** depicts an exemplary screen used by a video gaming system to inform user that he earned entertaining activity by exercising.

FIG. **34** depicts and exemplary game artifact earned by exercise.

FIG. **35** depicts an exemplary architecture used to control legacy video games by strength training exercise.

FIG. **36** depicts an exemplary video stream attractive to a male user that is obscured and can be unlocked by exercising.

FIGS. **37-40** shows screens of a video game during exercise games.

FIG. **41** shows an architecture that can be used to enable an exercise professional to monitor or adjust exercise regime provided by the invention.

FIG. **42** shows data architecture.

FIG. **43** shows an implementation of a semi-stationary unit where resistance is provided by electrical motor.

FIG. **44** depicts a schematic diagram providing electrical recuperation in rechargeable battery and/or super-capacitor.

FIG. **45** depicts a schematic diagram without electrical recuperation.

FIG. **46** shows an implementation of a semi-stationary unit where resistance is provided by electrical motor.

FIG. **47** shows electrical diagram of the pulley assembly.

FIG. **48** shows block with pulley and position sensor.

FIG. **49** shows wireless game controller, where resistance is provided by simultaneous eccentric and concentric motion.

FIG. **50** shows an exemplary form factor for controller handle.

FIGS. **51-52** shows an exemplary form factor for a controller.

FIG. **53** shows an exemplary form factor for controller handle.

FIG. **54** shows an exemplary form factor for a controller.

FIG. **55** shows muscle training apparatus implemented as field upgrade to Nintendo WII balance board.

FIG. **56** shows muscle training apparatus implemented as a field upgrade to Nintendo WII balance board.

FIG. **57** shows an exemplary block diagram of the handle (see FIG. **50**) electronic module.

FIG. **58** shows strain sensor.

FIG. **59** shows connections of the strain sensor to MCU.

FIG. **60** shows the flow chart of an exemplary algorithm to measure the strain.

FIG. **61** shows a treadmill equipped with a video camera.

FIG. **62** shows a data flow to use information from video camera.

DETAILED DESCRIPTION OF THE INVENTION

101	TV
102	Nintendo WII
103	muscle training machine
201	Mouse
202	desktop home computer
203	Bluetooth adapter
204	keyboard
205	Monitor
206	muscle training machine
301	Box
302	Touchscreen
303	electronic control module
304	internet server
305	Motor
306	Blocks
307	interchangeable handle
308	Internet
309	wireless router
310	video camera
311	Local computer
401	Handle
402	Motor
403	electronic control module
404	fiduciary mark
405	Handle
406	Cable
501	elastic band
502-503, 601-603	fiduciary mark
701	LinkMatik 2.0 Bluetooth transceiver
702	Microchip micro controller PIC 16C745
703	Micro Drives optical Encoder E4P - 300 series
704-708	Micro Drives DC gear motor M22P series
709-712	Pulse Width Modulation (PWM) control signal
713-715	switch
717	Maxwell ultra-capacitor BCA PO350
718, 719	resistor
720	VDD1
721	voltage signal
722	Signal AN3
723	Signal AN2
724	Hand grip sensor contacts
725	National Semiconductor operational amplifier LMC 64
726	Analog Devices Tri-Axis Inertial Sensor ADIS16350
727	Omron round switch A-22-1
801	heart rate sensor
802	body
803	motor
804	electronic control module (ECM)
805	battery
806	cable
807	spots spring
808	sensor
901	position
902-904	force
1001	frame
1002	cable
1003	gear box
1004	electric motor
1101	handle
1102	hydraulic cylinder
1201	adjustable handle
1202	commercially available actuator
1301	grip handle
1302	exercise box
1303	web-cam
1401	model of the patient hand

-continued

1402	current velocity
1403	visual guidance
1405	therapeutic limit
1406	audio/visual warning
1501	Force
1502	Position
1503	Zone of therapeutic efficiency
1504	Force level 1
1505	Force level 2
1601	Resistance force
1602	Time
1603	period of resistance pulsing
1604	Force Level 1
1605	Force Level 2
1701	Dumbbell
1702	Barcode
1801	User with dumbbells
1802	Camera
1803	Dumbell
1804	Known size object
1901	user
1902	camera
1903	Handle
1904	adjustable resistance band
1906	black area
1907	color 1
1908	color 2
1909	color 3
2001	user
2002	camera
2003	handle
2004	rubber band
2005	coloured stripes
2101	Exercise Software
2102	Points Bank
2103	Game Software
2201	identify user
2202	analyze user exercise need
2203	compute plurality of group of exercise options
2204	user selection
2205	compute plurality of recommended exercises
2206	user selection
2207	display recommendation how to perform exercise
2208	receive current resistance settings
2209	adjust or suggest adjustment of resistance settings
2210	supervise workout
2211	add points to the point bank
2301	resistance band
2302	user
2303	door gym
2304	color coding
2305	adjusting knob
2306	camera
2401	isometric device
2402	user
2403	color contrast numbers
2404	camera
3401	Gun
3402	gun ammo
3403	Accelerometer gesture
3501	Muscle training handle/controller
3502	Bluetooth HID profile
3503	Computer/video gaming system
3504	Joystick events
3505	Glove Pie Driver
3601	puzzle fragment
3602	picture
3701	exercise menu portion
3702	on-line services
3703	history records
3801	guest
3802	user 1
3803	user 2
3901	egg
3902	basket
4001	Target force zone

-continued

4101	exercise professional
4102	professional's computer
4103	internet
4104	application server
4105	exercise history
4106	muscle training box
4107	user
4108	monitor
4109	exercise regime
4110	video gaming system
4201	Force sensor
4202	Position sensor
4203	controller
4204	accelerometer
4205	buttons/joystick
4206	Pointer Bluetooth HID
4207	video gaming system
4208	current exercise
4209	repetitions/set
4210	translation to game
4211	controlling
4212	application server
4213	on-line profile
4214	professional recommendations
4301	motor
4302	gear box
4303	cable
4304	electronic module
4305	cooling fan
4401	power supply
4402	wireless connection with video gaming system or PC
4403	microcontroller
4404	motor driver with recuperation
4405	re-chargeable battery
4406	position sensor
4407	motor
4408	gear box
4409	pulley
4410	cable
4411	handle
4412	joystick
4413	control buttons
4414	resistor
4501	power supply
4502	wireless connection
4503	microcontroller
4504	motor driver
4505	current sensor
4506	position sensor
4507	radio link
4508	motor
4509	gear box
4510	pulley
4511	cable
4512	handle
4513	joystick
4514	control buttons
4701	reed switch
4702	microcontroller
4703	RF module
4801	pulley roller
4802	magnet
4803	pulley body
4804	reed switch
4805	cable
4901	concentric motion 1
4902	user
4903	handle with retractable cord
4904	strain sensor
4905	control buttons
4906	joystick
4907	RF link
4908	cord
4909	pulley with position sensor
5401	Handle 1
5402	Tension sensor
5403	cord
5404	button 1
5405	button 2

-continued

5406	handle 2
5407	controller module with WiFi
5501	user
5502	handle
5503	handle
5504	extension with pulley
5505	cord
5506	extension without pulley
5507	bord
5601	Pulley
5602	WII balance board
5603	Extension board
5604	rope under the extension board
5605	user
5801	Flexible metal base
5802	cable
5803	Carbon based conductive ink
5804	insulating flexible substrate
5805	metalized highly conductive pad
5806	metalized highly conductive pad

FIG. **1** depicts the muscle training machine **103** coupled with Nintendo WII **102** video gaming system. Nintendo WII **102** is connected to a TV **101**. The muscle training machine **103** is a wireless game controller, further described on FIG. **4**.

FIG. **2** depicts the muscle training machine **206** coupled with a desktop home computer **202**. Computer runs an exercise game, that can established link with the training machine **206** through bluetooth adapter **203**. Exercise game takes extra input from keyboard **204** and mouse **201** and provide audio communication to the user through speakers **208** and video communication through monitor **205**. Further, exercise software incorporates the pose tracking subsystem based on open source ARToolKitPlus. The pose tracking subsystem relies on web camera **207** for the video input.

FIG. **3** depicts the muscle training machine that is loosely coupled with video gaming system. The machine is embodied as a box **301** with touchscreen **302**, hoist with motor **305** and electronic control module **303**. Electronic control module **303** is similar in design to the module depicted in FIG. **7**, but the microcontroller **702** is replaced with a more powerful Atmel AT91SAM9RL64. On the alternative, a more powerful ARM **11** based microcontroller (such as STMicro STA2065 application processor) is added and communicates with the microcontroller **702** using I2C bus. Further, the bluetooth module **701** is replaced with WIFI module. Other changes apparent to one ordinary skilled in the art might be needed. The box **301** and the blocks **306** are secured to the wall, were blocks **306** are secured at different height. The hoist cable **312** is routed though one of the blocks **306** and is terminated by one of the interchangeable handles **307**. Electronic control module **303** establish WiFi connection to wireless router **309**, that using the Internet **308** provide TCP/IP connection to the internet server **304**. The microcontroller in ECM runs Windows CE operating system, and using Microsoft Silverlight based user interface, allows to select individual exercises and workouts, adjust the resistance, and track the progress. Using Web Services framework, the software communicates with the internet server **304**, which used to store user profiles and distribute data on workouts and exercises. Local computer **311** might run exercise software. The exercise software and electronic control module **303** mutually will try to discover each other using broadcasting on the local network. If TCP/IP communication is established, the exercise software provides exercise coaching and video games enriching the user experience. Optional Wifi camera **310** provides video stream for the pose tracking, which is implemented on either electronic control module **303** or desktop computer **311**.

FIG. **4** depicts the embodiment of the invention as a wireless game controller appearing as a power cable. Handles **401** and **405** are connected by cable **406**. Cable is attached to the host powered by the motor **402** connected with electronic control module **403**. To facilitate pose tracking, handles have several pictures of fiduciary marks **404**.

FIG. **5** depicts an elastic band **501** with fiduciary marks **502** that can be worn on wrists or ankles during exercise to facilitate pose tracking.

FIG. **6** depicts weight training gloves with images of fiduciary marks **601**, **602**, **603**. Fiduciary marks are located to ensure visibility of at least one of the mark regardless of fingers' and arms' position.

FIG. **7** depicts the Electronic Control Module (ECM) electric schematics.

electric elements specified on the schematic are:

D1 701	LinkMatik 2.0 Bluetooth transceiver
D2 702	Microchip micro controller PIC 16C745
D3 725	National Semiconductor operational amplifier LMC 64
D4 716	Texas Instruments boost regulator TPS 61080
D5 726	Analog Devices Tri-Axis Inertial Sensor ADIS16350
M1 703	Micro Drives optical Encoder E4P - 300 series
M2 704	Micro Drives DC gear motor M22P series
C1 717	Maxwell ultra-capacitor BCA PO350
S1 724	Hand grip sensor contacts
S2 . . . S8 705 . . . 708	National Semiconductor Power MOSFET IRL 520
IS5 727	Omron round switch A-22-1

Serial to Bluetooth data link module D**1** **701** provides connection of the Electronic Control Module (ECM) to a standard Bluetooth enabled host (playstation, laptop/desktop computer, PDA, mobile phone. ECM is controlled by firmware of the micro controller D**2** **702**. Communication portion of the irmware supports the communication link between ECM and a host. Serial data input RTS and serial data output TXD of module D**1** **701** and microcontroller D**2** **702** are used to serially connect them.

The firmware continuously monitors the output pulses of the incremental optical servo drive shaft encoder M**1** **703**.

Gear motor M**2** **704** works as the ECM servo drive. Gear motor M**2** **704** provides a driving torque or provides a resistive torque in active or passive dynamic mode functioning as a controlled brake to maintain the necessary exercise cord tension level. Switches S**5** **705**, S**6** **706**, S**7** **707**, S**8** **708** are controlling the polarity of pulse width modulated signal (PWM) supplied to the motor **704**. Pulse Width Modulation (PWM) control signals SC**1** **709**, SC**2** **710**, SC**3** **711** are supplied through the power MOSFETs S**2** **712**, S**3** **713**, S**4** **714** to the gear motor M**2** **704**. S**2** **712** switch provides PWM of VDD**2** amplitude to the gear motor **704**. VDD is supplied from the main energy source: rechargeable battery V**1** **715** through the DC-DC converter D**4** **716** or from the alternative energy source: ultra-capacitor C**1** **717**. The ultra-capacitor C**1** **717** charging/re-charging is controlled by the switch S**4** **714**. Charging current is limited by the resistor R**3** **718**. The ultra-capacitor C**1** **717** provides a high current boosting energy source for the servo drive. In case of rechargeable battery **715** and capacitor **717** been fully charged, the S**3** **713** switch provides connection of the motor **704** to the damping resistor R**2** **719**. VDD**1** **720** level of the battery voltage is monitored by the microcontroller D**2** **702**. AN**1** voltage signal **721** monitored by the microcontroller **702** represents the gear servo motor **704** current. AN**3** **722** signal monitored by microcontroller **702** represents the charge voltage of the ultra-capacitor

C1 **717**. Signal AN2 **723** monitored by microcontroller **702** represents the dumping resistor current for the Motor M2 **704** which could be used for dynamic breaking when negative passive motor torque is used to maintain the level of resistance during the resistance training exercise.

Hand grip sensor S1 **724** provides electrical pulses detected from user's hand which allows to calculate current heart beat rate of the user. Pulses are getting amplified by operational amplifier D3 **725** and are getting monitored by the microcontroller D2 **702**. Information about the current user's heart beat rate gets sent to the host computer or video game consul through wireless interface of the module **701**. Information about current acceleration of the ECM is provided by the 3D accelerometer D5 **726**. Video game can show user in real time the better way to perform exercise and at the same time to adjust the resistance level of exercise to maintain the heart beat in the safe range.

FIG. **8** depicts wireless game controller for strength training where resistance is provided by dynamic force. The controller comprises 2 handles with embedded heart rate sensors **801**. Handles are connected using plurality of springs **807**. User can adjust the resistance by changing number springs. In one of the handle, electronic circuit is placed inside the body **802**. The circuit contains motor **803** attached to a hoist, electronic control module **804**, and battery **805**. The electronic control module (ECM) **804** is designed similar to the electronic control modules depicted on FIG. **7**, however, the capacity of capacitor **717** is substantially reduced as there is no need to provide substantial resistance. Motor is used just to trace the distance between the handles. There are sensors **808** located in the spots springs **807** attached to the body **802**. Those sensors are connected to ECM to enable counting of number of springs used during the exercise. ECM is configured to periodically transmit to video gaming system information about exercise: number of reps performed, energy used, current distance between handles, the pulse, position and velocity from the accelerometer.

FIG. **9** depicts exemplary dependence of force **902** from position **901** during one rep of the exercise. During concentric step of the exercise motor is configured to use force **903**. Motor generates energy that is stored in the capacitor **717**. During eccentric step, motor recuperates energy and is configured to use force **904**. Overall energy needed during the eccentric step is smaller than the energy generated during concentric step, which allow for the non-100% recuperation. This is needed in case of wireless embodiment. In the case when the resistance mechanism have access to an AC power supply, the force during eccentric step could be higher than during concentric step.

Resistance can be provided by various means known in the art depicted on

FIGS. **10-12**. FIG. **10** depicts a weight training machine where resistance is provided by an electrical motor/generator. **1001** is frame, **1002** is cable, **1003** is a gear box and **1004** is an electric motor. FIG. **11** depicts a weight training machine where resistance is provided by a hydraulic mechanism. **1101** is handle, **1102** is hydraulic cylinder. FIG. **11** depicts a weight training machine where resistance is provided by an electrical linear actuator. **1202** is a commercially available actuator, **1201** is an adjustable handle. Those machines can be coupled with video gaming system by an electrical circuit similar to one depicted on FIG. **7**. On the alternatives, frames can be removed, and the variable resistance mechanism can be put into a more gadget like game controller.

The invention enables various physical exercise based activities, as can be illustrated by the example of remote or virtual online arm wrestling competition depicted on FIG. **13**. The arm wrestling competition requires two participants. Each participant places one arm, both put either the right or left, on a surface, with their elbows bent and touching the surface, and they grip handle **1301** connected by the cable to the exercise box **1302** connected through video gaming system and internet to the same kind of video gaming system and exercise box at other participant's location. The goal is to pin the other's arm onto the surface, with the winner's arm over the loser's arm. Each participant's position is observed by the web-cam **1303** and gets displayed on the TV monitor **1304**. One can approximate the force a person is being able to apply during arm wrestling as a function of position, velocity, and time since the start of exercise. The arm wrestling exercise software on personal computer will provide several virtual opponents; each of them can be characterized by such a force function. During the virtual arm-wrestling, the user will select a partner and difficulty level. The software on video gaming system will receive from the controller current position and velocity, and using profile force curve and some random factor, calculate desired force and send it to the controller. The user technique (force, speed of the movement, posture, endurance, etc) is analyzed by the software and virtual coaching can be provided to improve user technique. The user force curve can be approximated from his exercise and such can become a part of user's online profile. This enables off-line virtual tournament, when software downloads another user's profile and use it as a virtual partner. In online tournament mode, two video gaming system exchange through internet current position, velocity, and force. The software is configured to adjust force simultaneously on 2 exercise boxes to synchronize position and velocity. Webcam is used to provide video link between 2 exercise partners.

It is beneficial to provide pose tracking into video game, physical exercise, or physiotherapy. Pose tracking is feasible with off the shelf methods and a higher resolution (2 mp or better) web camera. In the embodiment, fiduciary marks are imprinted on the handles of the controller to facilitate pose tracking. Further, user can wear ankle or wrist bands, or gloves with marks. Video gaming system recognizes the position of fiduciary marks using an open source ARToolKitPlus. Controller integrates data from the accelerometers and periodically transfers the integrated position and velocity to video gaming system The data are used to enhance the tracking precision. The software utilizes OpenCV motion tracking algorithms to combine the data from un-marked motion tracking, tracking of fiduciary marks, position data from the motor, and accelerometer data into single motion model. Intel integrated performance primitives library is used to facilitate image processing.

The system may be used to enable automated physiotherapy. Physiotherapist sets exercise parameters and observe initial session through web cam over Internet. During recovery after a dislocation, it is important to allow joint movement up to certain angle, and provide different resistance during eccentric and concentric phases. The software in video gaming system is configured to supervise users exercises and provide the controlled level resistance to the patient's hand movement at each stage of the exercise. During exercise, the software displays screen schematically shown on FIG. **14**. The software displays computer generated model **1401** of the patient hand with posture adopted from the pose tracking modules. The software displays current velocity **1402** and visual guidance (faster/slower/good) **1403** to the user. The software also displays therapeutic limit **1405** for the user and provide audio/visual warning **1406** in the case the limit is approached. The user progress is stored as a part of online profile. Resistance is provided by the exercise box described

on FIG. **3**. Physiotherapist periodically performs review of patent's online profile and modifies parameters.

There is research claiming that vibrating the resistance during exercise substantially increases exercise efficiency and has physio-therapeutical effect The invention can easily provide such an exercise regime. Further, because the invention tracks the use posture and exercise speed, the vibrating regime can be optimized depending on those parameters. FIGS. **15** and **16** show example of manipulation of exercise resistance force's magnitude. FIG. **15** shows an exemplary plot of the force as a function of position, while FIG. **16** as a function of time.

Many of the known video games use a video camera (such as a combination of visible light and infrared video camera as provided in Microsoft Kinect) to track users posture. The invention advantageously uses video camera to recognize exercise device used by the user (or available to be used in a view of the video camera), as well as the current setting of the exercise device. This information is advantageously used to record the history of exercise regime, adjust prompts given to the user by the exercise system, and to plan exercise regime. In an embodiment, the exercise devices contains markers to facilitate the recognition. In some embodiments of the invention, the markers are available for sales and can be attached to pre-existing exercise devices. In other embodiments, the invention is compatible only with a limited number of exercise devices with pre-manufactured markers, those enabling lock-in of the costumer and more profits. It is apparent to one ordinary skilled in the art that more business methods falls within the scope of invention.

FIG. **17** shows a dumbbell with a barcode **1702**. It is apparent to one ordinary skilled in the art different kind of markers, such as 2D barcode, color codes, etc can be practiced within the scope of the invention.

FIG. **18** shows user exercising with an ordinary dumbbells. The system registering the dumbbells by allowing user to demonstrate them and record the corresponding weight. The system remembers the relative sizes of the object with known size (**1804**) and the adjustable weights, that enables to recognize the currently installed weight.

FIG. **20** shows user exercising with an exercise band with replaceable resistance bands. In an embodiment, each replaceable band is equipped with a marker, having two high contract black ends **1906** and color coded pieces **1907-1909** in between. In an embodiment, the video gaming system is configured by software to recognize the current resistance using computer vision techniques. For example, when the exercising with rubber bands, pose tracking information could be used to identify the current length of the rubber band. In an embodiment, the rubber band has high contrast object or markings on it, facilitating the recognition of the current resistance level.

FIG. **21** shows an exemplary architecture to communicate between exercise software **2101** and gaming or entertaining software **2103**. In an embodiment, by achieving exercise goals, such as time or intensity of exercise, or upon reaching a milestone (ten push-ups), user earns a number of points. The points then can be used by entertaining software to buy time (e.g., a teenager can watch his favorite series only after exercising for half hour) or access to premium content (e.g., a teenager can got access to R-rated movie or premium weapon or money in virtual reality game).

FIG. **35** shown an architecture to enable control of a conventional game or an application using exercise equipment. The muscle training controller supports HID profile **3502**. A software utility called GlovePIE **3505** is installed on a PC. The utility is configure to translate muscle training events (e.g., movement of exercise device or handle) into joystick, or mouse and keyboard events **3504**. Conventional game or application **3503** receives translated events.

FIG. **36** illustrates the concept of audio and visual reinforcement of an exercise. During the exercise, at least a portion of the VGS screen displays an attractive to the user picture **3602**. However, at least a portion of a picture is hidden by an obstructive image **3601**. The obstructive image is removed as user progresses on exercise. One skilled in the art would understand that this concept can be used for static images, videos, and audio. For example, a user may elect to be required to exercise during a football match. If intensity of the exercise is not on track, the image will became blurred or obscured. The user will have to be back on track to the see the image. On the alternative, the user might be watching a movie and a particularly interesting for a user moment will be approaching. User will be required to push really hard to see the most interesting scene. It is apparent to once ordinary skilled in the art that instead of obscuring the video, one may just pause it for a time.

FIG. **39** depicts an exemplary screen of a video game. The goal of the game is to collect as many as possible eggs **3901** into bucket **3902**. The eggs are falling down. The game can be controlled using a controller depicted on FIG. **49**. By moving handles left and right, the bucket can be moved accordingly. By applying greater force at the handles, the player can increase the speed the bucket can move on the screen, or directly earn points.

FIG. **49** depicts overall view and FIGS. **47**, **48**, **50-60** alternative embodiments and implementation details of a strength machine based on a common idea—the resistance force is provided by counteracting of different muscle group. For example, on FIG. **55** user **5501** pulls up both handles **5502** and **5503**. The handles connected by cord **5505**. The cord goes through two blocks (pulleys) that are located in extension legs underneath WIT balance board. When user moves one handle upward, another handle is moved up, n allowing for eccentric and concentric motions. The handles have 3d accelerometers and can transfer information used to trace their position to WII console. The tension in the cord creates extra force at the legs, which is measured by WII balance board build in scales and transferred to WII console. The gaming software on WII console receives the pressure at each of the four legs and use it to calculate the resistance force used during exercise.

In the simplest form, the pulley based strength staining machine can be implemented as an electronic-less upgrade to Wii Balance board. Such a product would contain 2 handles connected with a rope of adjustable length, one of the handles would have a pocket to insert WII remote, and 2 leg extensions—2 with blocks, 2 without blocks.

A lot of other different pulley based machines coupled with a video gaming system are in the scope of invention. Some configurations are shown on FIGS. **47**, **48**, **50-60**.

The invention can advantageously monitor the user pulse rate and advantageously use the pulse rate information to adjust the exercise parameters. For example, if pulse rate is too high, the invention can advantageously suggest to use slower motion or reduce the resistance or exercise duration, or number of repetitions and/or sets. If the pulse rate is too high, the invention will advantageously increase the exercise demand. The invention will advantageously store user pulse rate for various exercises and use this information to optimize parameters for future exercises.

Many possible pulse measurement techniques can be used in the invention. In some embodiments, traditional electric contact based heart sensors are used, as shown on FIG. **8**, **801**.

However, the invention advantageously envisions the use of noncontact heart and breath monitoring techniques in exercise machines. Some of the methods for noncontact measurements of heart and breath rate include laser Doppler (S. Ulyanov and V. Tuchin, "*Pulse-wave monitoring by means of focused laser beams scattered by skin surface and membranes*," in Proc. SPIE, Los Angeles, Calif., 1984, pp. 160-167), microwave Doppler radar (E. Greneker, "*Radar sensing of heartbeat and respiration at a distance with applications of the technology*," in Proc. Conf. RADAR, Edinburgh, U.K., 1997, pp. 150-154) and thermal imaging (M. Garbey, N. Sun, A. Merla, and I. Pavlidis, "*Contact-free measurement of cardiac pulse based on the analysis of thermal imagery*," IEEE Trans. Biomed. Eng., vol. 54, no. 8, pp. 1418-1426, August 2007). Although use of all the methods above are within the scope of invention, in the preferred embodiment the invention uses ordinary Web camera coupled with video gaming system, ordinary web camera installed on a treadmill or other specialized exercise device, the phone camera, or camera build in the Kinect or similar peripheral. The same camera is preferably used for motion and pose tracking. It is know in the art that light reflection properties of human skin changes with blood pulse (see J. Allen, "*Photoplethysmography and its application in clinical physiological measurement*," Physiol. Meas., vol. 28, pp. R1-R39, March 2007). Those slight color changes could be used to detect the pulse and breathing rate (see W. Verkruysse, L. O. Svaasand, and J. S. Nelson, "*Remote plethysmographic imaging using ambient light*," Opt. Expr., vol. 16, pp. 21434-21445, December 2008. and M. Z. Poh, D. J. McDuff, and R. W. Picard, "*Non-contact, automated cardiac pulse measurements using video imaging and blind source separation*," Opt. Expr., vol. 18, pp. 10762-10774, May 2010). All the references are incorporated here within by reference. In the research prototypes developed in the art, OpenCV library is used for face detection, and then blind signal decomposition is used to detect the pulse. Although the same method can be practiced with the invention, another approach would include parametric modelling of skin color changes and detection of the parameter change.

The invention advantageously automatically determines by the processor of a video gaming system the resistance force used during strength training exercise. In one embodiment, the video camera coupled with a video gaming system is used to recognize the weights or adjustable resistance band, or not extended length of resistance band. In other embodiments, the video gaming system receives the resistance directly from the strength machine coupled with a video gaming system. In embodiments, the same video camera is used to recognize the person who is exercising.

In an embodiment, the information of a person exercise history could be used to enable a business transaction with the said person. For example, a person may qualify for a discounted health or life insurance rate in consideration of a regular exercise. In this case the invented software would aggregate the exercise history information and use it as evidence with the insurance provider. Alternatively, the need to exercise may be a safety requirement associated with the job condition, or part of a sentence, or a condition of receiving disability benefits while recovering. The exercise history can be used for grading in the school curriculum. The invention can be used for all those purposes. In an embodiment, the invention use biometric data, such as face or fingerprint recognition to identify the person who exercised. In an embodiment, the invention can use multiple video gaming systems, for example the personal computer equipped with a web camera could be used to monitor in-house exercises, and a smartphone with location identification service, accelerometer, and web camera could be used for outdoor activities. In an embodiment, the system can monitor and facilitate early development activities of child.

The invention claimed is:

1. A method of facilitating strength training exercise by a person using a video gaming system, wherein at least one processor of the video gaming system performs at least the following steps:

a) communicate a first information with an exercise device, the first information indicative of a resistance force during said strength training exercise,

b) monitor progress of said strength training exercise,

c) supply information for a video or an audio signal indicative of the exercise progress;

wherein said resistance force can be adjusted, so there is a first magnitude of the resistance force associated with a position during exercise movement, and a second magnitude of the resistance force associated with substantially the same position, the first magnitude substantially different from the second magnitude.

2. The method as recited by claim **1**, wherein

the said information is originated by at least one processor of the video gaming system

the said information is received by said exercise device,

The said information causing said force adjustment.

3. The method as recited by claim **2**, further including the step of communicating a second information, the second information causing a force adjustment substantially different from the one caused by the first information.

4. The method as recited by claim **1**, wherein

a. said information is originated by said exercise device,

b. said information is received by the video gaming system,

c. The said information is indicative of the force adjustment.

5. The method as recited by claim **1**, wherein said information is a data indicative of a video signal, said video signal originates from a set of at least one video cameras, said processor is coupled with said set, and said exercise device is in a field of view of at least one camera in said set.

6. The method as recited by claim **1**, wherein the resistance adjustment can be performed by selecting by said person of an exercise device, and the step a) involves detection of said exercise device.

7. The method as recited by claim **1**, wherein the resistance adjustment can be performed by adjusting by said person settings of the exercise device, and the step a) involves detection of said settings.

8. The method as recited by claim **1**, further including the following step:

d) monitor at least one physiological parameter of said person during said exercise.

9. The method as recited by claim **8**, further including the following step

e) use said physiological parameter to generate an audio or a video signal.

10. The method as recited by claim **8**, further including the following step:

f) Use said physiological parameter to generate a force adjustment signal, wherein

i. said force adjustment signal is originated by the video gaming system,

ii. said force adjustment signal is received by said exercise device.

11. The method as recited by claim **9**, wherein said signal generated in step e) prompts the user to change at least one of the following:

Exercise velocity
Exercise range of motion
Exercise posture
Exercise effort.

12. The method as recited by claim **1**, wherein the information is used to change at least one entertaining activity by said person, said entertaining activity performed using the video gaming system.

13. A method of facilitating an exercise by a person using a set of at least one processors, wherein said set performs at least the following steps:

a. Receives a data derived from a video signal from a video camera, wherein the video contains a skin area of the person,
b. determines a heart rate of the person using a least a portion corresponding to the skin area of said data,
c. adjusts a parameter of the exercise depending on said determined heart rate.

14. The method as recited by claim **13**, wherein the data are used to track a user's pose.

15. The method as recited by claim **13**, wherein the step is done by generating an audio or a video signal facilitating user to change at least one of the following:

Exercise velocity
Exercise range of motion
Exercise posture
Exercise effort.

16. A method of facilitating an exercise by a person using a video gaming system, wherein the video gaming system performs at least the following steps:

a) Supply a first a video or an audio signal facilitating the person to perform the exercise,
b) Supply a second video signal facilitating engaging user in an entertainment activity, the entertaining activity is not directly related to or controlled by the said exercise,
c) Adjust said entertainment activity depending on the exercise, said adjustment is not an on-going control of said entertainment activity.

17. The method as recited by claim **13**, wherein step b) is performed using at least a portion of the data corresponding to the visible spectrum.

18. The method as recited by claim **16**, wherein said adjustment is an unlocking of some features of the entertaining activity as a result of the exercise activity.

19. The method as recited by claim **18**, wherein the unlocking makes the entertaining activity available for an extra time.

20. The method as recited by claim **18**, wherein said entertaining activity is a video game and said unlocking is given the person access to a more powerful game artifact.

* * * * *