US 20050135115A1

(19) United States

(12) Patent Application Publication

(10) Pub. No.: US 2005/0135115 A1

(43) Pub. Date: Jun. 23, 2005

Lamb et al.

(54) MULTIPLE LIGHTGUIDE BACKLIGHT

(76) Inventors: **David J. Lamb**, Oakdale, MN (US); **Keith M. Kotchick**, Saint Paul, MN (US); **Mark B. O'Neill**, Stillwater, MN (US); **Patrick H. Marushin**, Saint Paul, MN (US); **Mark E. Gardiner**, Santa Rosa, CA (US); **Kenneth A. Epstein**, Saint Paul, MN (US); **Philip E. Watson**, Saint Paul, MN (US)

Correspondence Address:
3M INNOVATIVE PROPERTIES COMPANY
PO BOX 33427
ST. PAUL, MN 55133-3427 (US)

(21) Appl. No.: **10/744,569**

(22) Filed: **Dec. 23, 2003**

Publication Classification

(51) **Int. Cl.**[7] **F21V 8/00**; F21V 9/14

(52) **U.S. Cl.** **362/613**; 362/19

(57) **ABSTRACT**

The present disclosure is directed to backlighting systems, which include first and second lightguides, at least one light source optically connected to an edge of the first lightguide and at least one light source optically connected to an edge of the second lightguide for supplying light into their respective interiors. In the appropriate exemplary embodiments, the backlighting systems of the present disclosure include an extractor disposed at a surface of the second lightguide for diffuse extraction of light from the interior of the second lightguide. In such exemplary embodiments, at least a portion of the light supplied into the interior of the second lightguide and then diffusely extracted therefrom enters the interior of the first lightguide through a substantially optically clear surface. In some exemplary embodiments, the backlighting systems of the present disclosure include recycling enhancement structures, which may be attached to the first lightguide.

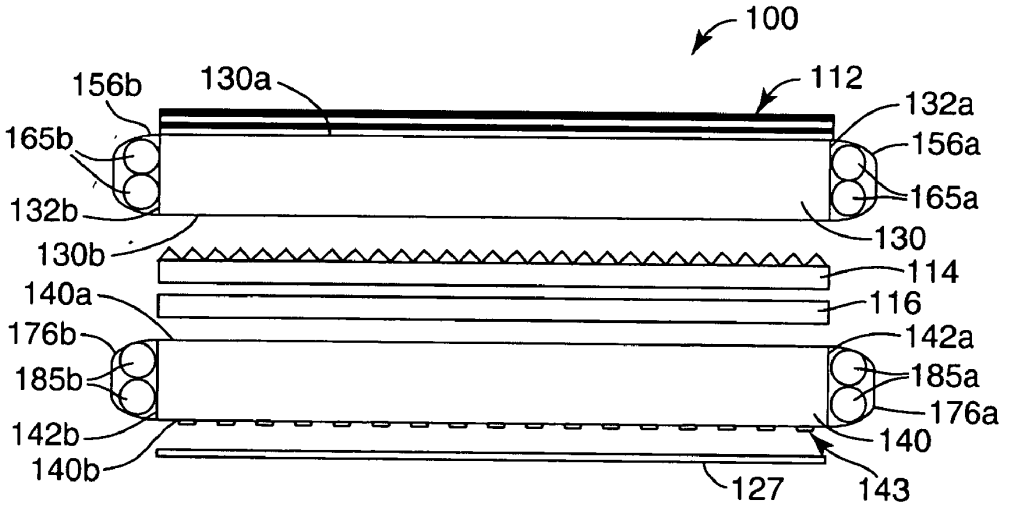

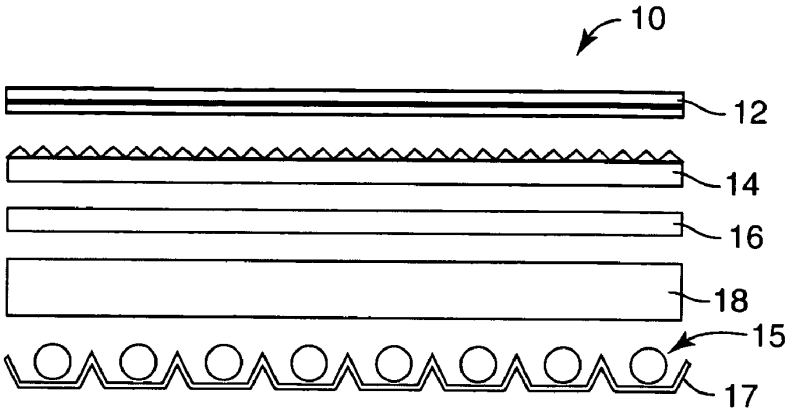

FIG. 1
PRIOR ART

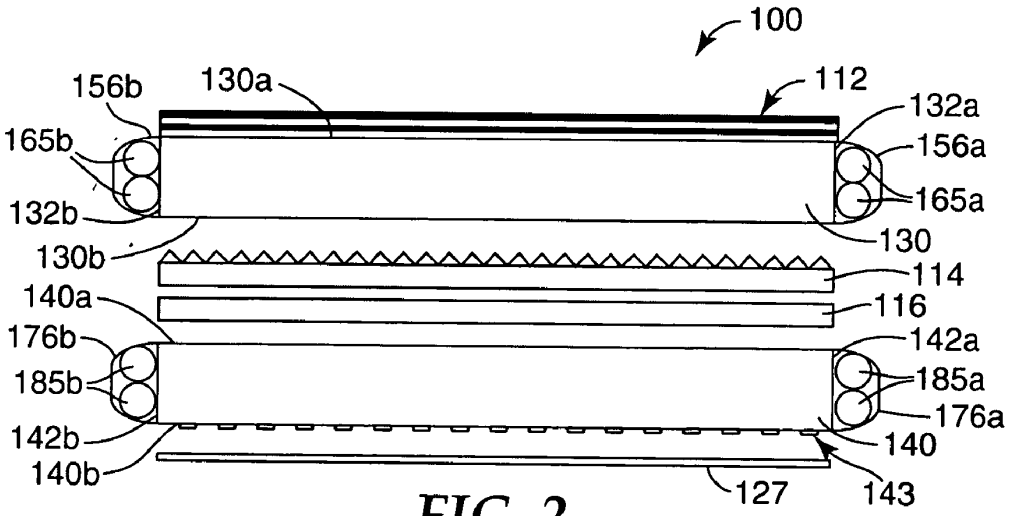

FIG. 2

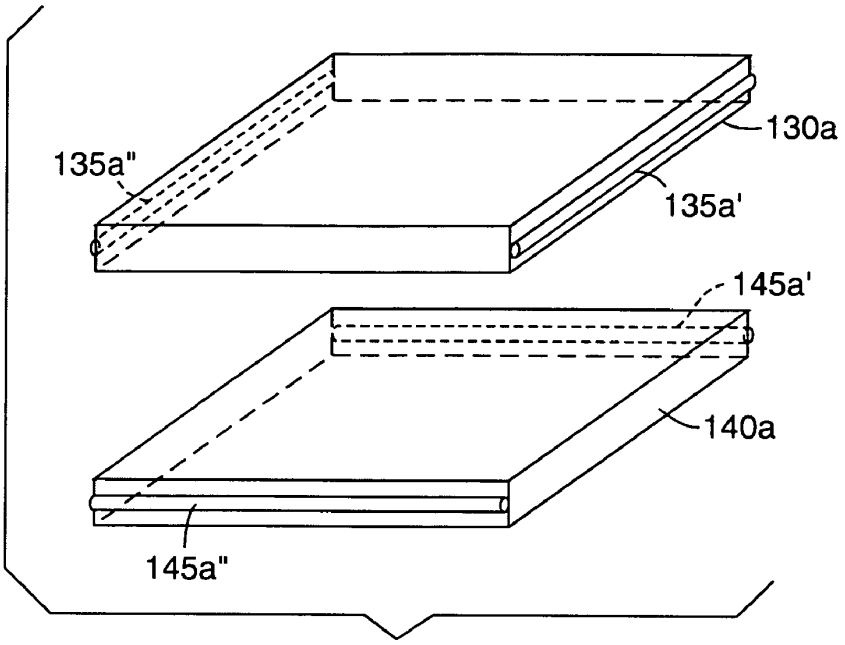

Fig. 2A

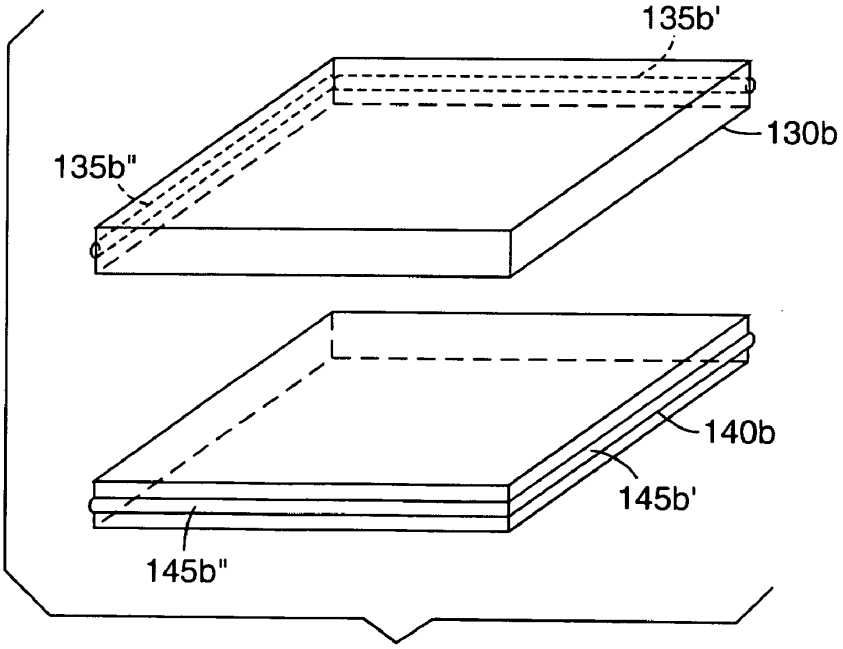

Fig. 2B

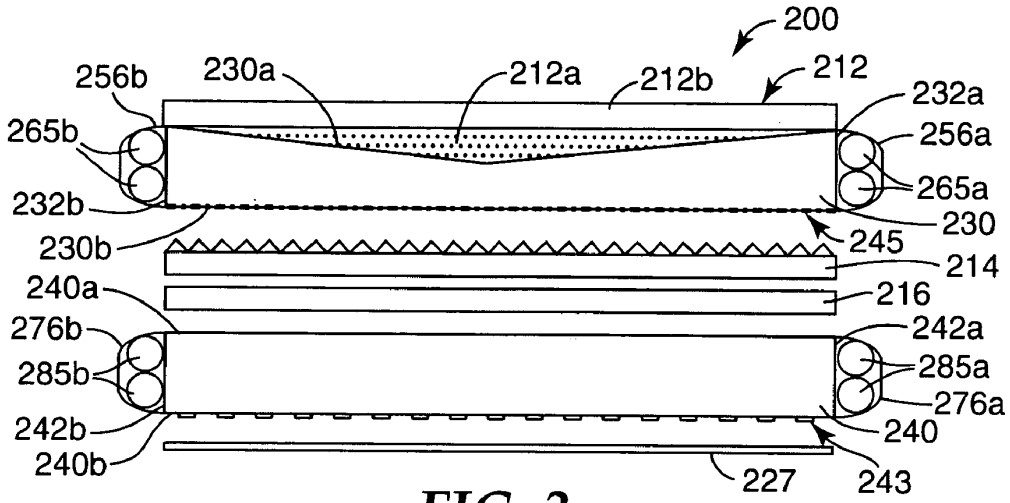
200
212
256b
230a
212a
212b
232a
265b
256a
265a
232b
230
230b
245
214
240a
216
276b
242a
285b
285a
276a
242b
240
240b
227
243

FIG. 3

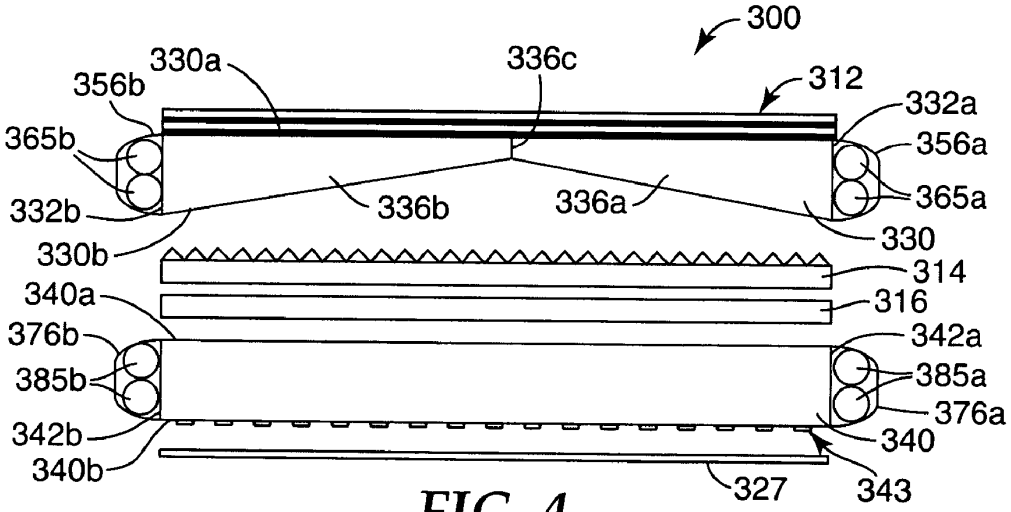
300
330a
336c
356b
312
332a
365b
356a
332b
336b
336a
365a
330b
330
314
340a
316
376b
342a
385b
385a
376a
342b
340
340b
327
343

FIG. 4

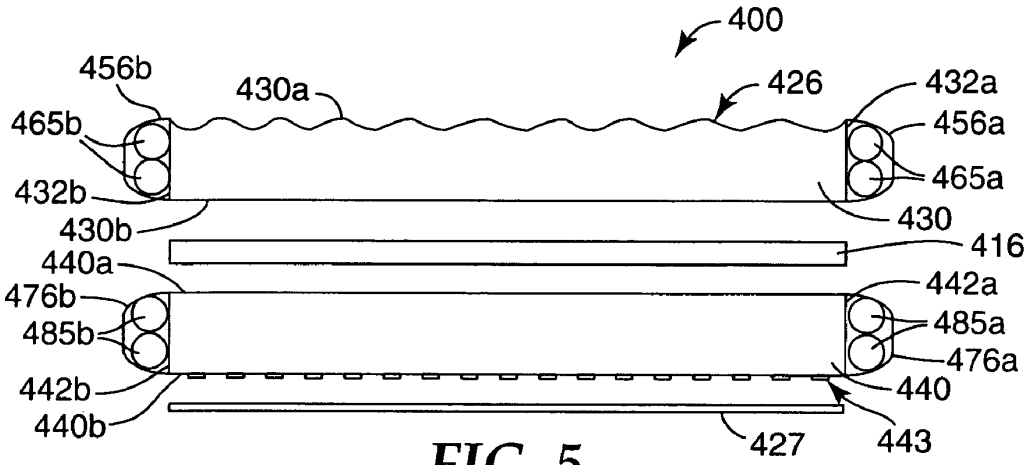
400
456b
430a
426
432a
465b
456a
465a
432b
430
430b
416
440a
442a
476b
485b
485a
476a
442b
440
440b
427
443

FIG. 5

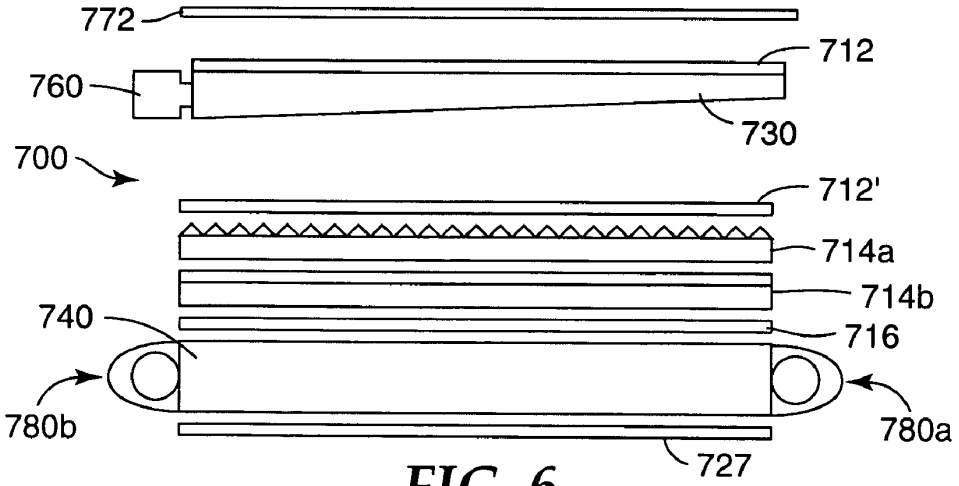
772
712
760
730
700
712'
714a
714b
740
716
780b
780a
727

FIG. 6

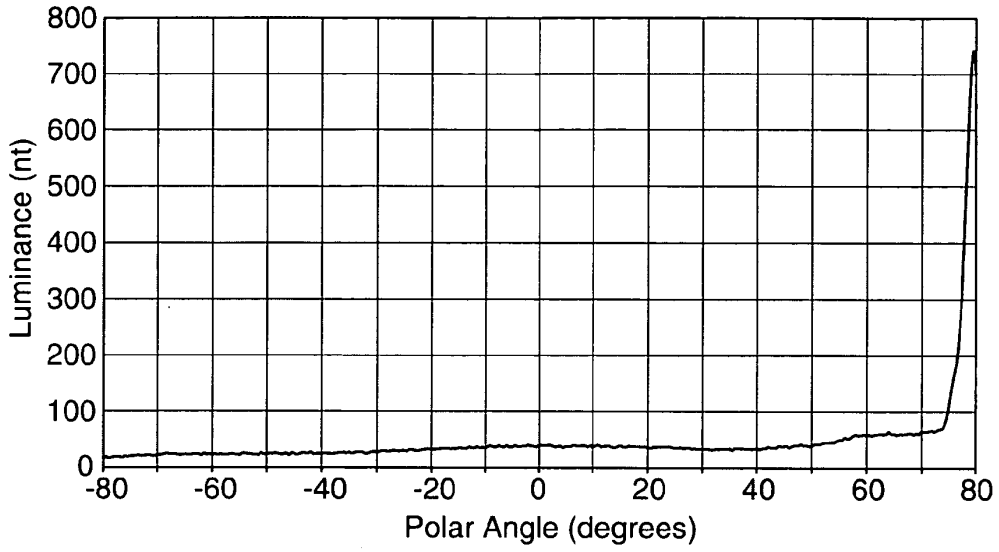
800
700
600
500
400
300
200
100
0
Luminance (nt)
-80
-60
-40
-20
0
20
40
60
80
Polar Angle (degrees)

Fig. 7A

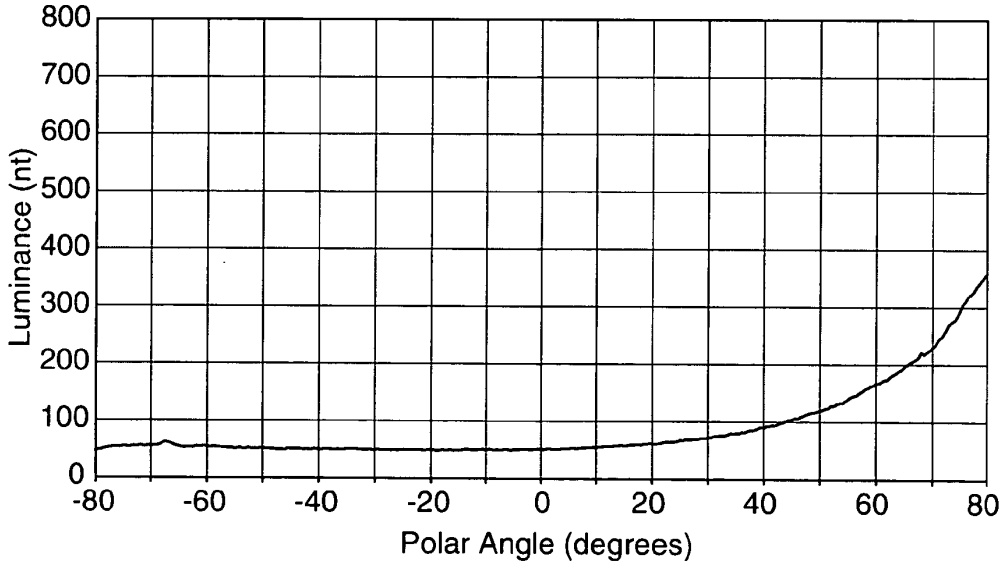
800
700
600
500
400
300
200
100
0
Luminance (nt)
-80
-60
-40
-20
0
20
40
60
80
Polar Angle (degrees)

Fig. 7B

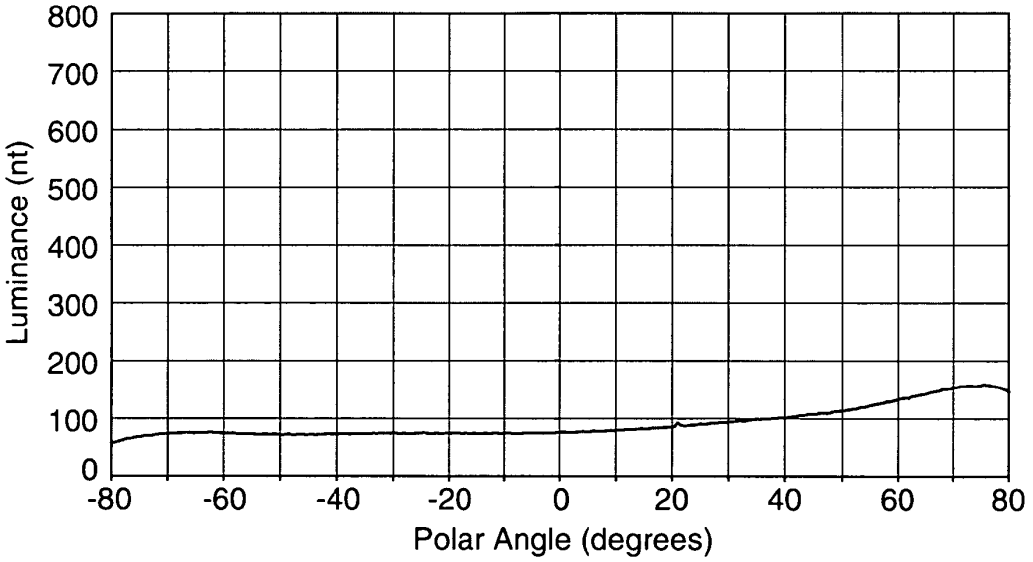
800
700
600
500
400
300
200
100
0
Luminance (nt)
-80
-60
-40
-20
0
20
40
60
80
Polar Angle (degrees)

Fig. 7C

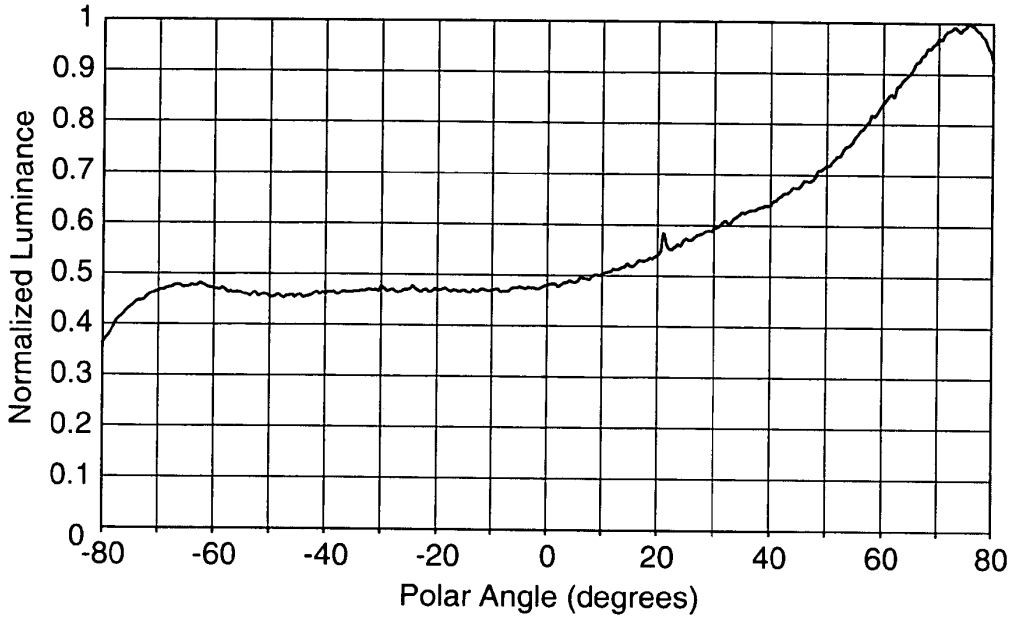
Normalized Luminance
1
0.9
0.8
0.7
0.6
0.5
0.4
0.3
0.2
0.1
0
-80
-60
-40
-20
0
20
40
60
80
Polar Angle (degrees)

Fig. 8A

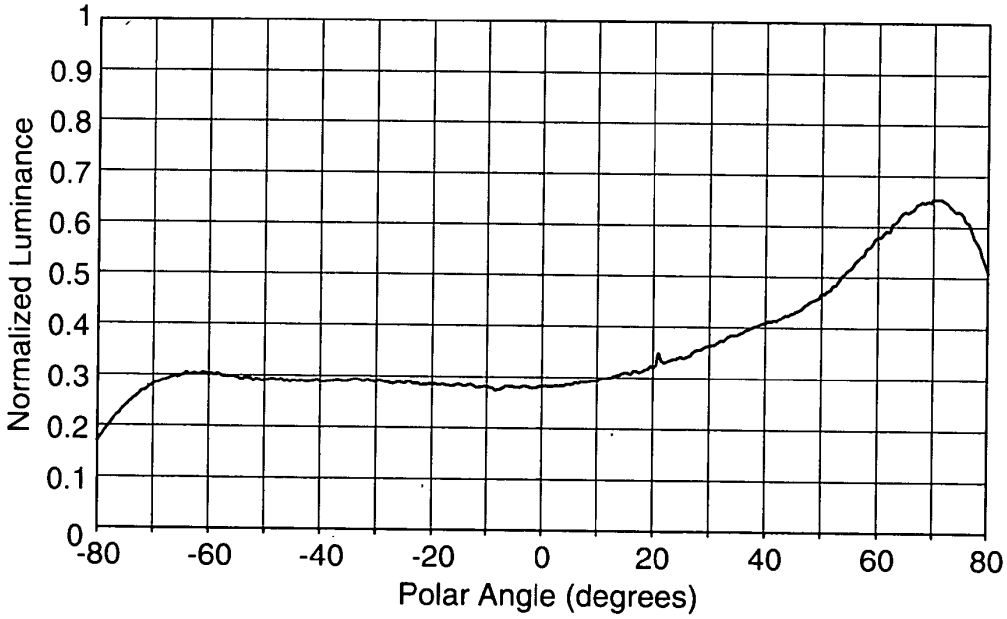
Normalized Luminance
1
0.9
0.8
0.7
0.6
0.5
0.4
0.3
0.2
0.1
0
-80
-60
-40
-20
0
20
40
60
80
Polar Angle (degrees)

Fig. 8B

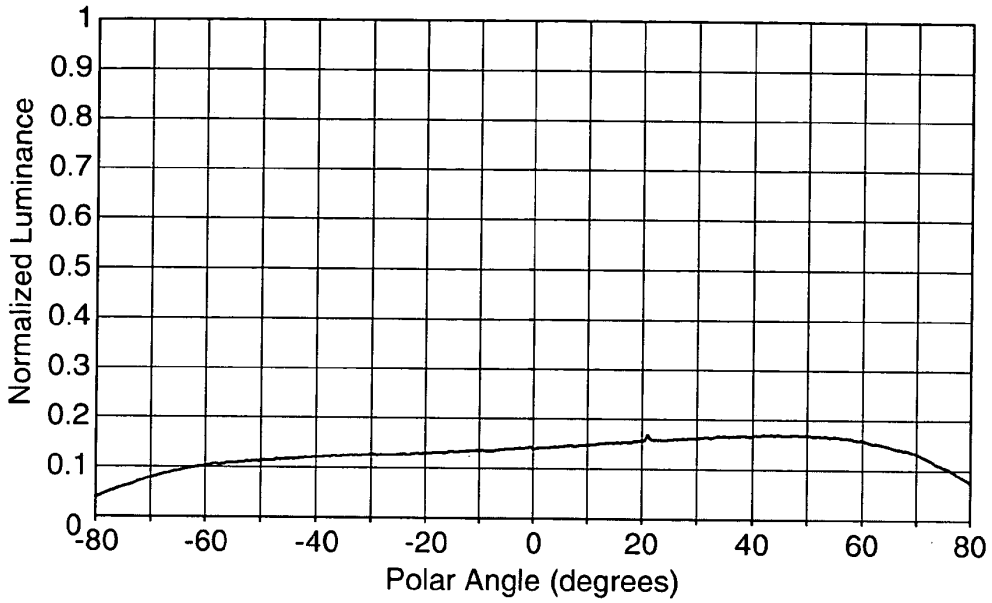
Normalized Luminance
1
0.9
0.8
0.7
0.6
0.5
0.4
0.3
0.2
0.1
0
-80
-60
-40
-20
0
20
40
60
80
Polar Angle (degrees)

Fig. 8C

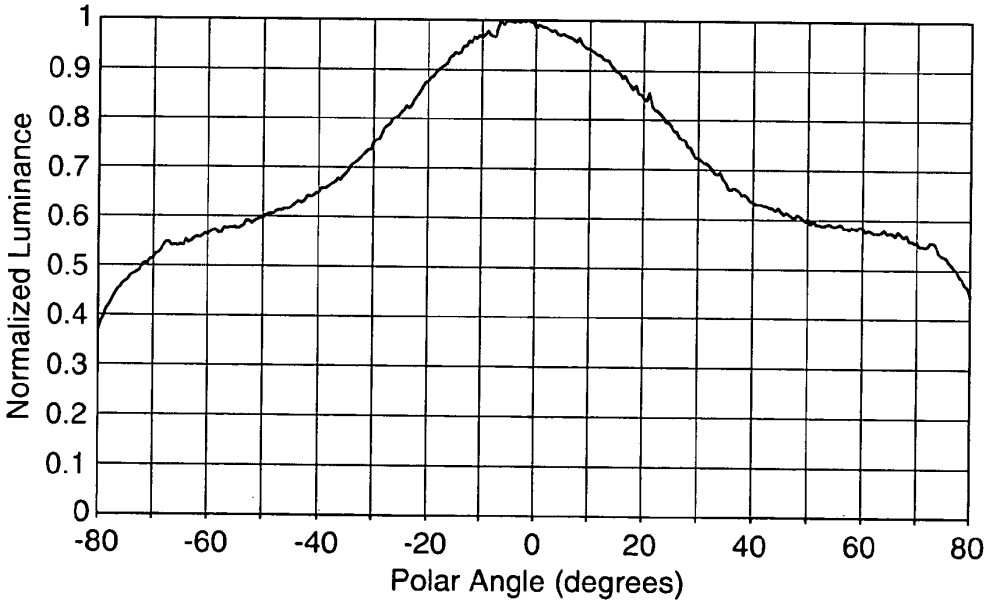
Normalized Luminance
1
0.9
0.8
0.7
0.6
0.5
0.4
0.3
0.2
0.1
0
-80
-60
-40
-20
0
20
40
60
80
Polar Angle (degrees)

Fig. 8D

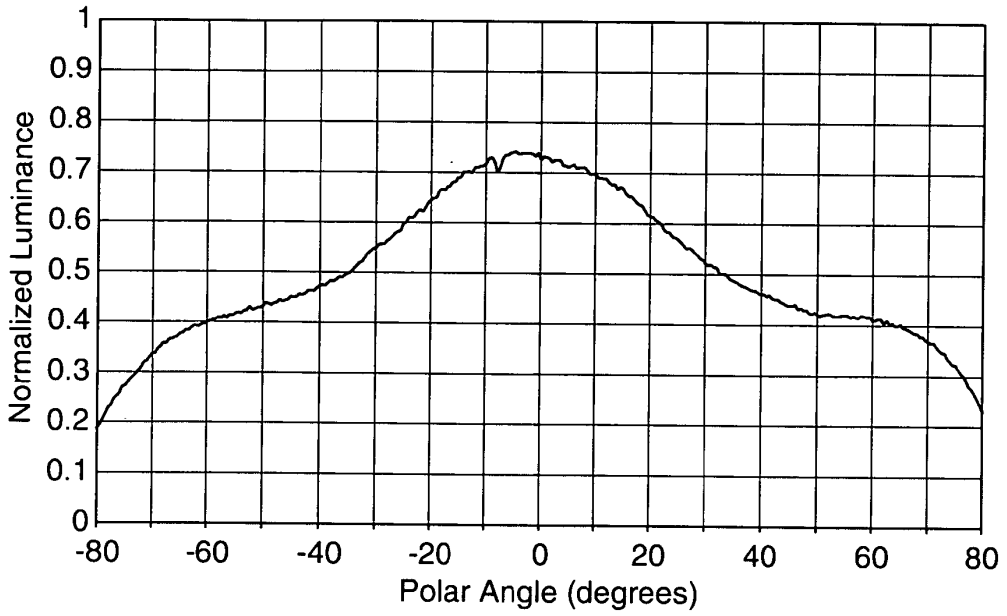
Normalized Luminance
1
0.9
0.8
0.7
0.6
0.5
0.4
0.3
0.2
0.1
0
-80
-60
-40
-20
0
20
40
60
80
Polar Angle (degrees)

Fig. 8E

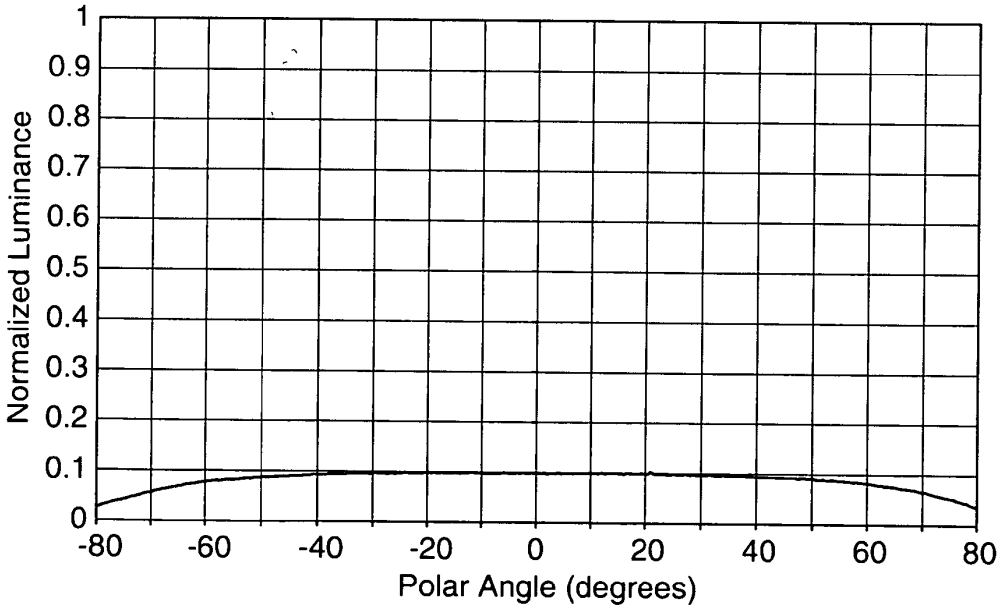
Normalized Luminance
1
0.9
0.8
0.7
0.6
0.5
0.4
0.3
0.2
0.1
0
-80
-60
-40
-20
0
20
40
60
80
Polar Angle (degrees)

Fig. 8F

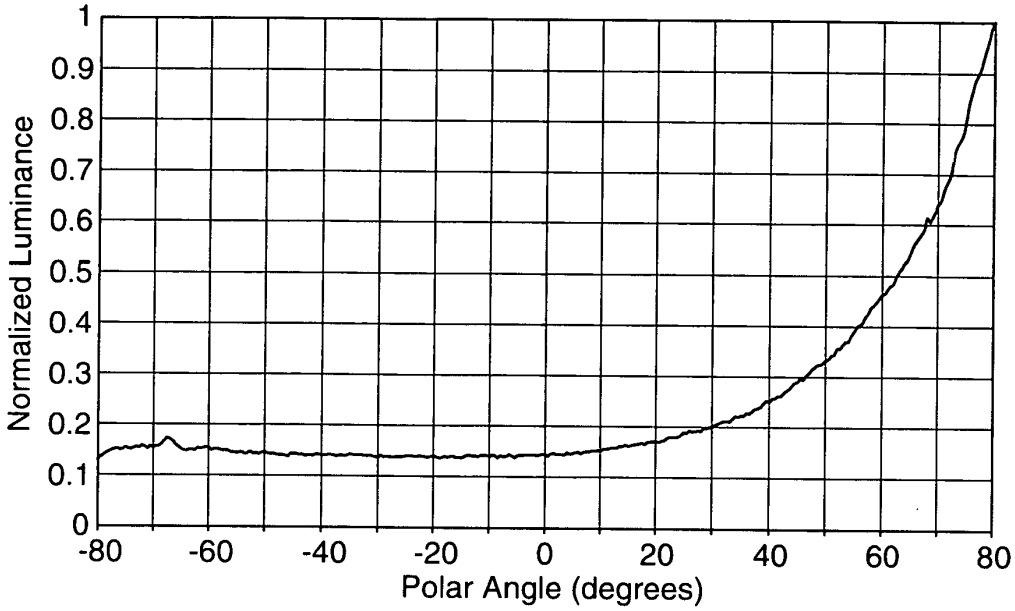
Normalized Luminance
1
0.9
0.8
0.7
0.6
0.5
0.4
0.3
0.2
0.1
0
-80
-60
-40
-20
0
20
40
60
80
Polar Angle (degrees)

Fig. 9A

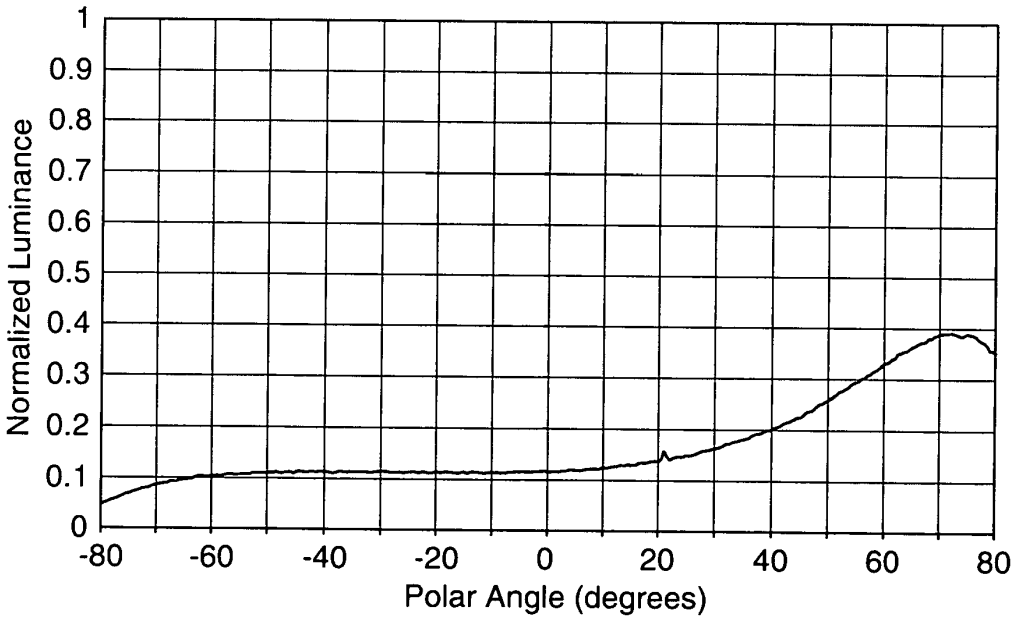
Normalized Luminance
1
0.9
0.8
0.7
0.6
0.5
0.4
0.3
0.2
0.1
0
-80
-60
-40
-20
0
20
40
60
80
Polar Angle (degrees)

Fig. 9B

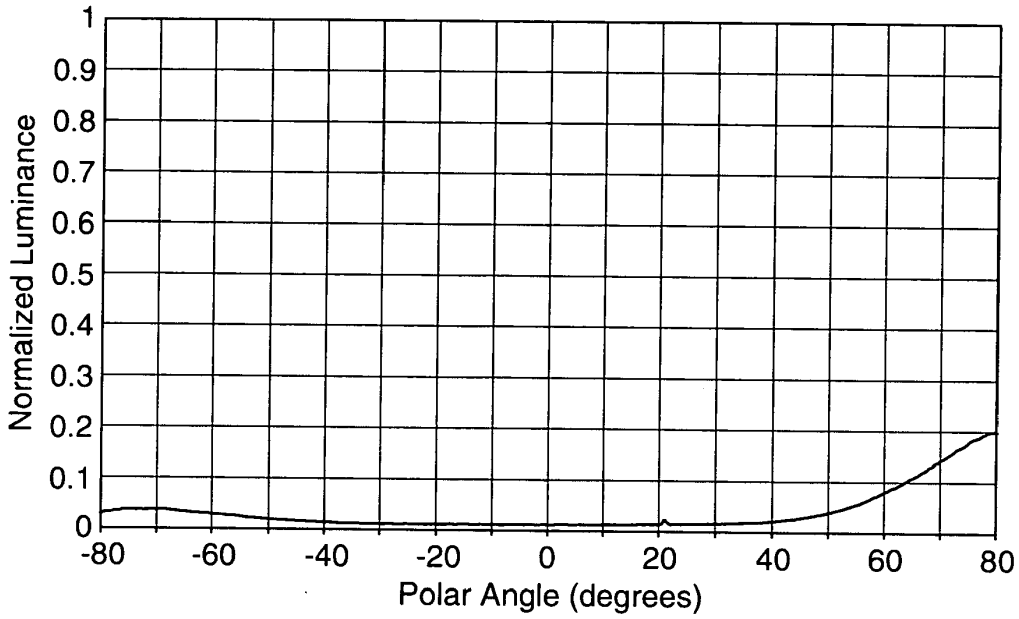
Normalized Luminance
1
0.9
0.8
0.7
0.6
0.5
0.4
0.3
0.2
0.1
0
-80
-60
-40
-20
0
20
40
60
80
Polar Angle (degrees)

Fig. 9C

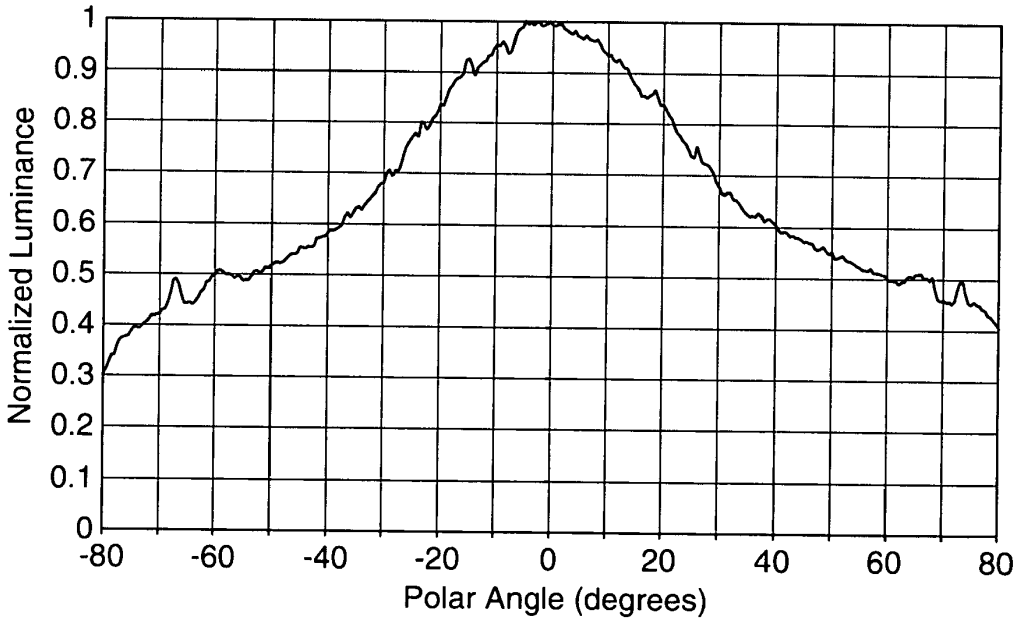
Normalized Luminance
1
0.9
0.8
0.7
0.6
0.5
0.4
0.3
0.2
0.1
0
-80
-60
-40
-20
0
20
40
60
80
Polar Angle (degrees)

Fig. 9D

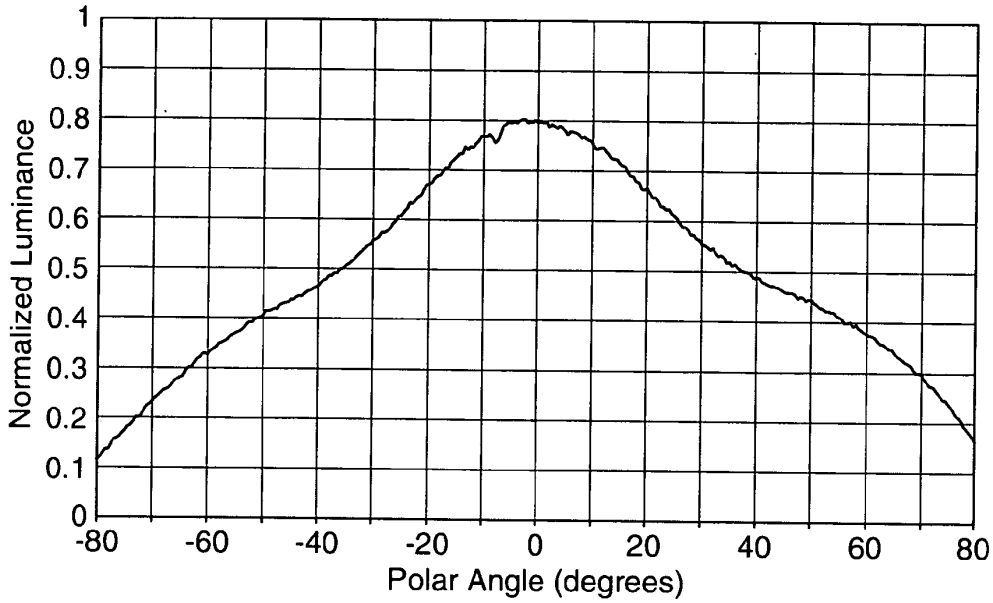
Normalized Luminance
1
0.9
0.8
0.7
0.6
0.5
0.4
0.3
0.2
0.1
0
-80
-60
-40
-20
0
20
40
60
80
Polar Angle (degrees)

Fig. 9E

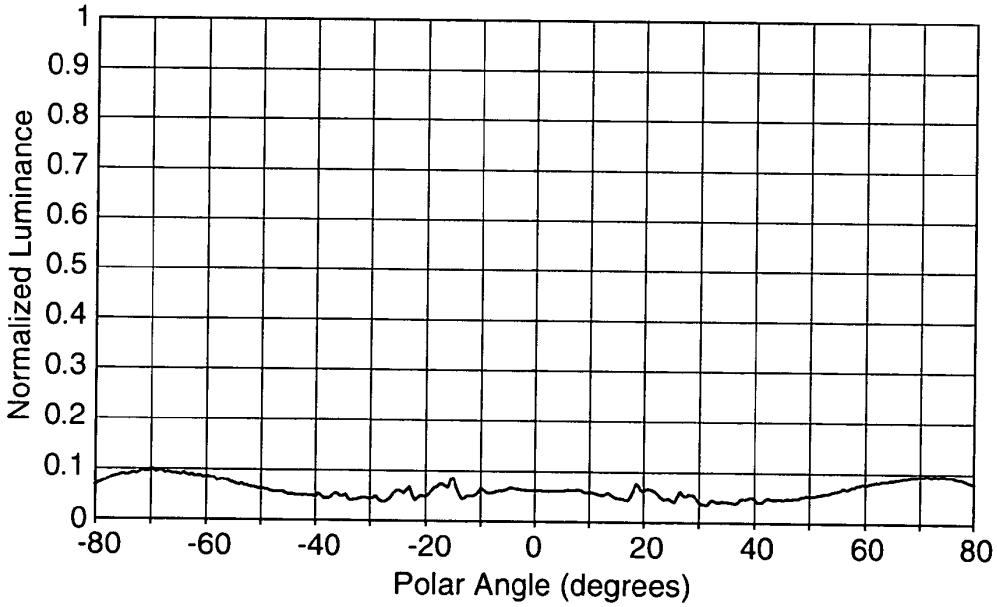
Normalized Luminance
1
0.9
0.8
0.7
0.6
0.5
0.4
0.3
0.2
0.1
0
-80
-60
-40
-20
0
20
40
60
80
Polar Angle (degrees)

Fig. 9F

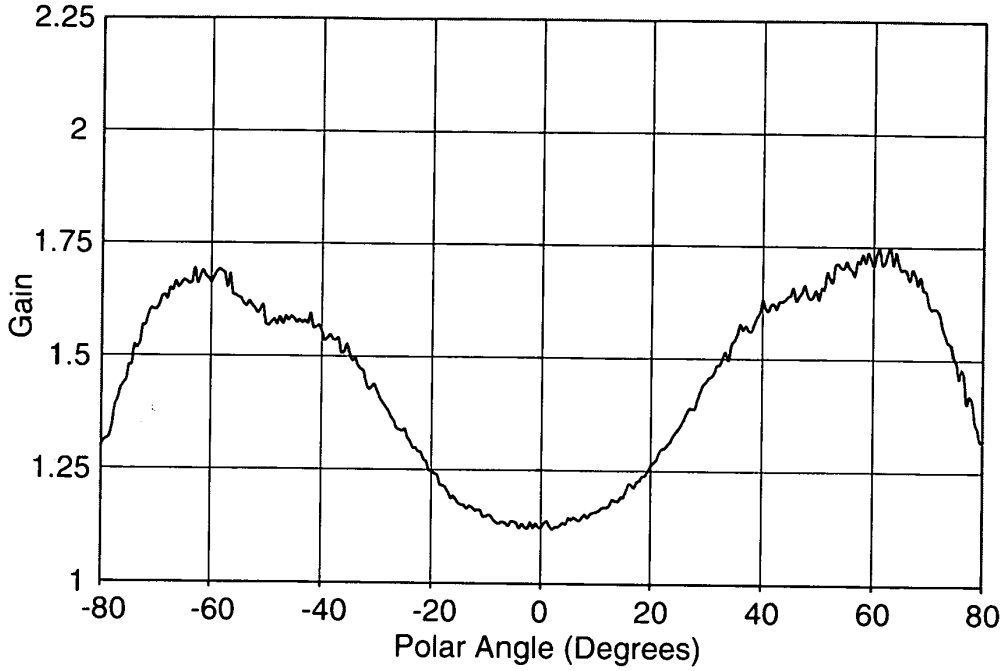

Fig. 10A

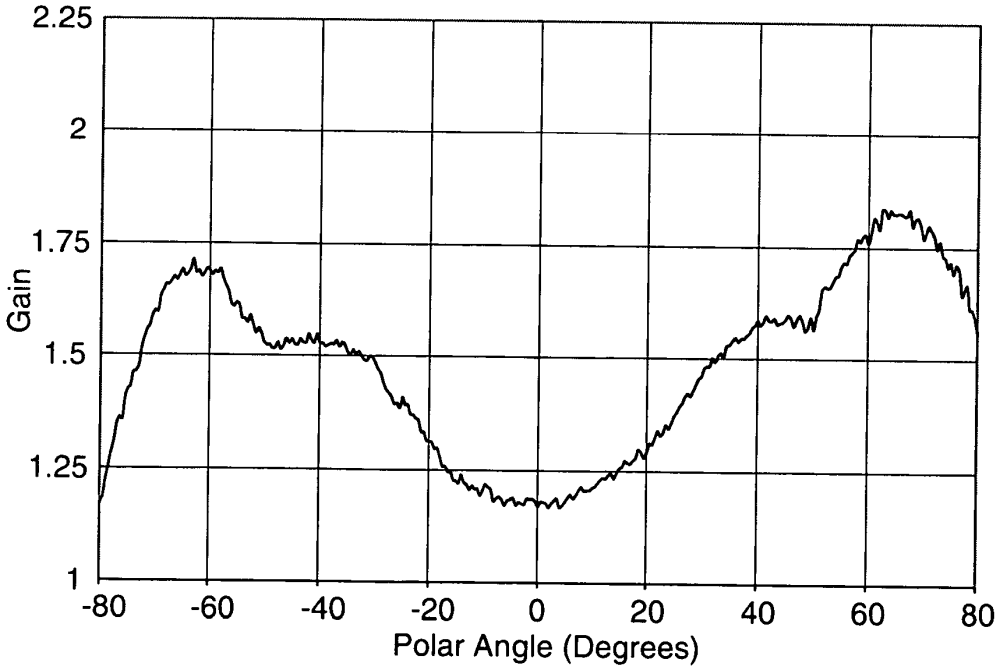

Fig. 10B

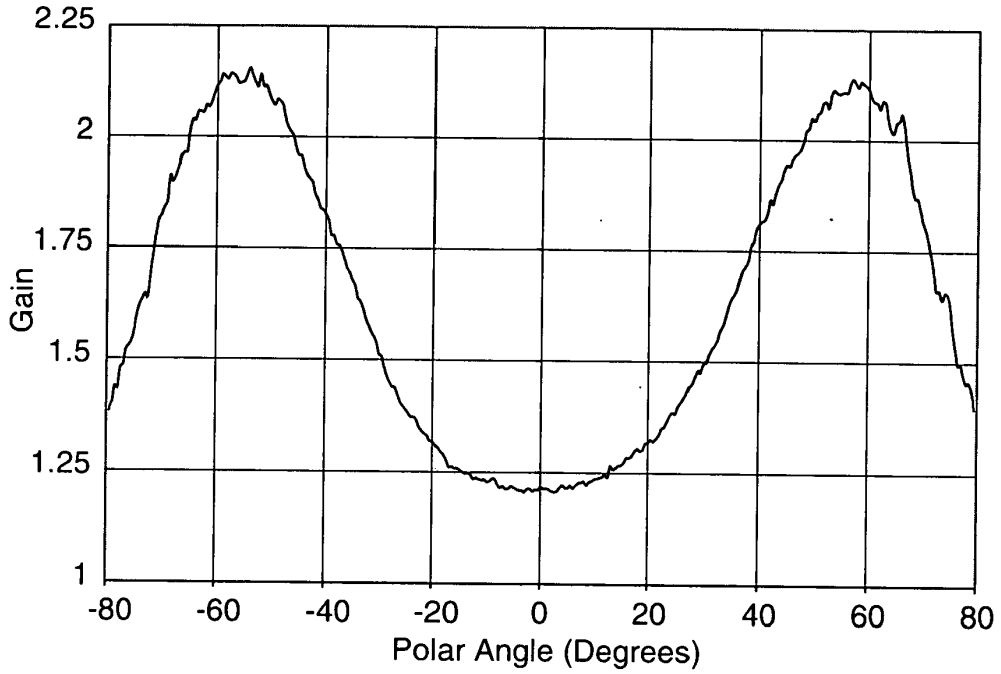

Fig. 10C

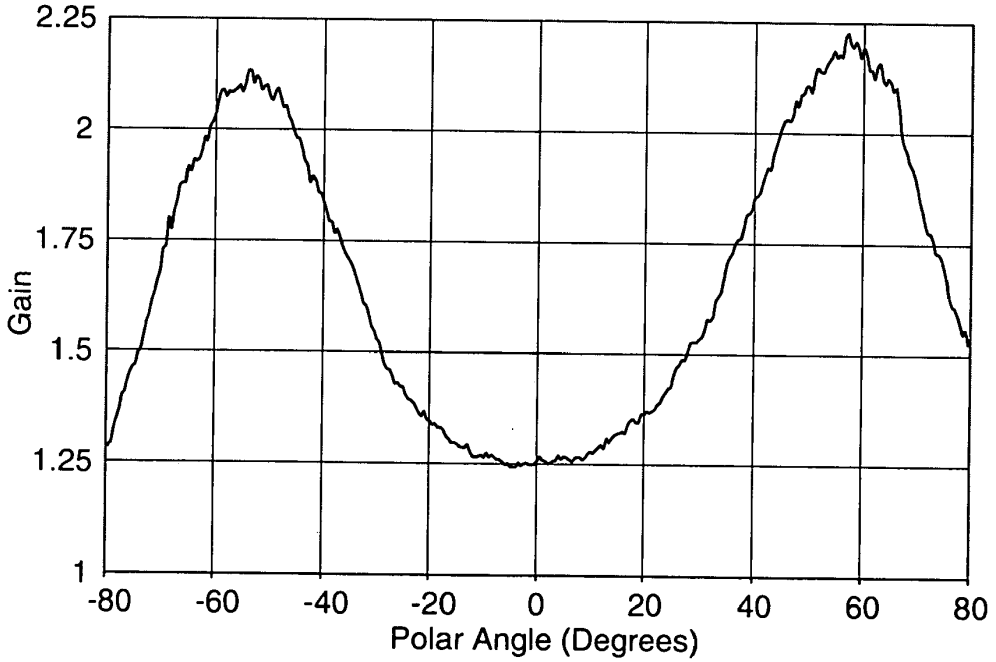

Fig. 10D

MULTIPLE LIGHTGUIDE BACKLIGHT

FIELD OF THE INVENTION

[0001] The present disclosure relates to backlighting systems, which may be advantageously used with large high-performance liquid crystal displays. More specifically, the disclosure relates to backlighting systems that include multiple lightguides, and, optionally, various recycling enhancement structures.

BACKGROUND OF THE INVENTION

[0002] Liquid crystal displays (LCDs) are widely used in electronic display devices, such as computer monitors, hand-held devices and televisions. Unlike cathode ray tube (CRT) displays, LCDs do not emit light and, thus, require a separate light source for viewing images formed on such displays. Ambient light illumination is sufficient for some applications, but with most large area and high performance LCDs, ambient light causes glare and is detrimental to readability. Thus, in order to improve readability, most large area and high performance LCDs include a source of light located behind the display, which is usually referred to as a "backlight."

[0003] Presently, many popular systems for backlighting LCDs include direct-lit backlights, in which multiple lamps or a single serpentine-shaped lamp are arranged behind the display in the field of view of the user, and edge-lit backlights, in which the light sources are placed along one or more edges of a lightguide located behind the display, so that the light sources are out of the field of view of the user. In order to compete with CRT displays, large LCDs displays (e.g., greater than ~20" or 50 cm in diagonal) must have high luminance targets, e.g., about 500 nt or more. Such high luminance targets are currently met by direct-lit backlights for LCDs.

[0004] The use of conventional direct-lit backlights systems, however, has caused some concerns among manufacturers of large LCDs, such as LCD televisions. One concern is a discrepancy between the intended lifetimes of LCDs, which for most LCD television purchasers may be 10 to 20 years, and the lifetimes of individual lamps in the televisions' backlights, which are approximately 10,000 to 20,000 hours and usually at the lower end of this range. In particular, cold cathode fluorescent lamps (CCFLs), which are frequently used for backlighting, have varying lifetimes and aging characteristics. If one CCFL burns out in a conventional direct-lit backlight, the result will be a dark line directly across the display. In addition, the spatial color uniformity of a conventional direct-lit display suffers as each CCFL ages differently. Major LCD manufacturers and television set makers currently do not have a model for servicing LCD backlights that fail in either of these two modes.

[0005] Furthermore, light reaching the viewer from multiple sources in a conventional direct-lit backlight usually is not mixed as well as the light in edge-lit backlights. Nonetheless, despite this shortcoming as well as the uniformity and aging disadvantages of conventional direct-lit backlights, they are currently a popular choice for backlighting LCDs, e.g., LCD televisions, because they allow reaching luminance targets that are competitive with CRT displays. Although edge-lit-backlights would appear to be more advantageous in many respects, achieving desired levels of luminance with traditional edge-lit backlights has remained a challenge. One difficulty has been arranging a large enough number of light sources at an edge of a single lightguide to provide sufficient optical power to reach the target luminance. Other difficulties include enhancement film warping in traditional backlights, e.g., due to high thermal gradients and handling problems.

[0006] Thus, there remains a need in the field of backlights for large high-performance LCDs for backlighting systems that are capable of achieving high luminance targets and are more efficient. In addition, there remains a need for backlighting systems for large high-performance LCDs that overcome other shortcomings of the currently available backlights described above.

SUMMARY

[0007] These and other shortcomings of the presently known backlights for large high-performance LCDs are addressed by the inventors of the present disclosure by providing multiple-lightguide backlighting systems as disclosed and claimed herein. Such systems may be advantageously used with a variety of devices, including LCD televisions, LCD monitors, point of sale devices, and other suitable devices. In addition to allowing to achieve high output luminances, the present disclosure mitigates the risks of using variable lifetime light sources, so that burnout or aging of an individual light source would not be catastrophic to the display viewing quality. Thus, if an individual light source ages or burns out in a multiple-lightguide system according to an embodiment of the present disclosure, the effect on spatial brightness and color uniformity will be relatively insignificant due to the enhanced light mixing.

[0008] The present disclosure eliminates the need for a thick diffuser plate traditionally used in direct-lit backlights to hide individual sources from the viewer, thus providing additional gains in brightness. The present disclosure also eliminates the need for a structured reflector traditionally used in direct-lit backlights, resulting in cost reductions and increased ease of manufacturing. In addition, light extracted directly from the top lightguide could be allowed to exit at a wide range of angles, which would enhance off-axis viewability of the display. Moreover, the present disclosure makes possible inclusion of additional features for preventing warp and physical damage to various recycling enhancement structures that may be used in exemplary embodiments of the present disclosure.

[0009] Thus, the present disclosure is directed to backlighting systems, which in one exemplary embodiment include first and second lightguides, at least one light source optically connected to an edge of the first lightguide and at least one light source optically connected to an edge of the second lightguide for supplying light into their respective interiors. In some embodiments, the backlighting systems of the present disclosure include an extractor disposed at a surface of the second lightguide for diffuse extraction of light from the interior of the second lightguide. In such exemplary embodiments, at least a portion of the light supplied into the interior of the second lightguide and then diffusely extracted therefrom enters the interior of the first lightguide through a substantially optically clear surface.

[0010] Such backlighting systems may further include a first recycling enhancement structure disposed at a surface

of the first lightguide, which may include a reflective polarizer, a reflective polarizer and a diffuser, or a reflective polarizer and a prismatic structure. The diffuser may be spatially graded. Preferably, the first recycling enhancement structure is attached to a surface of the first lightguide. Alternatively or additionally, the backlighting systems of the present disclosure may include a second recycling enhancement structure disposed between the first lightguide and the second lightguide, which may include a prismatic structure. Preferably, the second recycling enhancement structure is attached to a surface of the first lightguide.

[**0011**] Other embodiments of the backlighting systems of the present disclosure include first and second lightguides, at least one light source optically connected to an edge of the first lightguide and at least one light source optically connected to an edge of the second lightguide for supplying light into their respective interiors. Such exemplary embodiments also include a second recycling enhancement structure disposed between the first lightguide and the second lightguide.

[**0012**] The second recycling enhancement structure may include a prismatic structure. The prismatic structure preferably includes a plurality of prisms having apexes pointing generally away from the second lightguide. In the appropriate embodiments, the second recycling enhancement structure may include a first surface defining a plurality of prisms substantially symmetrical about a first horizontal axis and having apexes pointing generally away from the second lightguide and a second surface defining a plurality of prisms substantially symmetrical about a second horizontal axis and having apexes pointing generally away from the second lightguide. The first axis may be generally orthogonal to the second axis. Preferably, the second recycling enhancement structure is attached to a surface of the first lightguide.

[**0013**] The backlighting systems constructed according to the present disclosure may also include a first recycling enhancement structure disposed at a surface of the first lightguide. The first recycling enhancement structure may include a reflective polarizer, a reflective polarizer and a diffuser, or a reflective polarizer and a prismatic structure. Preferably, the first enhancement structure is attached to a surface of the first lightguide.

[**0014**] In the appropriate exemplary embodiments of the present disclosure, the first and second lightguides each comprise two opposing edges, at least one light source is optically connected to each of said edges, and the opposing edges of the first lightguide are not aligned with the opposing edges of the second lightguide. Alternatively, the first and second lightguides each comprise two adjacent edges, at least one light source is optically connected to each of said edges, and the adjacent edges of the first lightguide are not aligned with the adjacent edges of the second lightguide.

[**0015**] The present disclosure is also directed to backlighting systems, which include first and second lightguides, a plurality of light sources optically connected to a first edge of the first lightguide, a plurality of light sources optically connected to a second edge of the first lightguide, a plurality of light sources optically connected to a first edge of the second lightguide, and a plurality of light sources optically connected to a second edge of the second lightguide. In some embodiments, the backlighting systems of the present disclosure include an extractor disposed at a surface of the second lightguide for diffuse extraction of light from the interior of the second lightguide. In such exemplary embodiments, at least a portion of the light supplied into the interior of the second lightguide and then diffusely extracted therefrom enters the interior of the first lightguide through a substantially optically clear surface. Such backlighting systems may further include a first recycling enhancement structure disposed at a surface of the first lightguide, which may include a reflective polarizer, a reflective polarizer and a diffuser, or a reflective polarizer and a prismatic structure. The diffuser may be spatially graded. Preferably, the first recycling enhancement structure is attached to a surface of the first lightguide.

[**0016**] Alternatively or additionally, these exemplary embodiments may include a second recycling enhancement structure disposed between the first lightguide and the second lightguide. The second recycling enhancement structure may include a prismatic structure. The prismatic structure preferably includes a surface defining a plurality of prisms having apexes pointing generally away from the second lightguide. In the appropriate embodiments, the second recycling enhancement structure may include a first surface defining a plurality of prisms substantially symmetrical about a first horizontal axis and having apexes pointing generally away from the second lightguide and a second surface defining a plurality of prisms substantially symmetrical about a second horizontal axis and having apexes pointing generally away from the second lightguide. The first axis may be generally orthogonal to the second axis. Preferably, the second recycling enhancement structure is attached to a surface of the first lightguide.

[**0017**] Furthermore, in the appropriate embodiments of the present disclosure, at least one of the first lightguide and the second lightguide may have variable thickness, and at least one lightguide may include first and second wedge portions. The extractor disposed at a surface of the second lightguide may be spatially graded. Additionally or alternatively, substantially optically clear surface extraction structures may be disposed on the surface of the first lightguide that faces the second lightguide. The backlighting systems of the present disclosure may also include a reflector sheet disposed next to the surface of the second lightguide that faces away from the first lightguide and a diffuser sheet disposed next to the surface of the second lightguide that faces away from the first lightguide.

[**0018**] These and other aspects of the backlighting systems of the subject invention will become more readily apparent to those having ordinary skill in the art from the following detailed description together with the drawings.

BRIEF DESCRIPTION OF THE DRAWINGS

[**0019**] So that those having ordinary skill in the art to which the subject invention pertains will more readily understand how to make and use the subject invention, exemplary embodiments thereof will be described in detail below with reference to the drawings, wherein:

[**0020**] **FIG. 1** is a schematic cross-sectional view of a presently available direct-lit backlight for LCD televisions;

[**0021**] **FIG. 2** is a schematic cross-sectional view of an exemplary embodiment of a backlighting system according to the present disclosure;

[0022] **FIGS. 2A and 2B** illustrate alternative ways of arranging light sources at the edges of generally rectangular lightguides;

[0023] **FIG. 3** is a schematic cross-sectional view- of another exemplary embodiment of a backlighting system according to the present disclosure, illustrating the use of a spatially graded diffuser;

[0024] **FIG. 4** is a schematic cross-sectional view of another exemplary embodiment of a backlighting system according to the present disclosure, illustrating the use of a variable thickness lightguide;

[0025] **FIG. 5** is a schematic cross-sectional view of another exemplary embodiment of a backlighting system according to the present disclosure;

[0026] **FIG. 6** is a schematic cross-sectional view of an exemplary configuration for testing some of the concepts of the present disclosure;

[0027] FIGS. **7**A-C show data illustrating properties of light extracted from the top lightguide, where the top lightguide is a bare wedge (**FIG. 7A**), a wedge laminated with DBEF-M (**FIG. 7B**), or a wedge laminated with DRPF (**FIG. 7C**);

[0028] FIGS. **8**A-F show data representing output polarization of DRPF-laminated lightguide;

[0029] FIGS. **9**A-F show data representing output polarization of DBEF-M-laminated lightguide;

[0030] **FIG. 10A** shows a gain profile of a lightguide system with a loose sheet of DRPF;

[0031] **FIG. 10B** shows a gain profile of a lightguide system with a laminated sheet of DRPF;

[0032] **FIG. 10C** shows a gain profile of a lightguide system with a loose sheet of DBEF-M; and

[0033] **FIG. 10D** shows a gain profile of a lightguide system with a laminated sheet of DBEF-M.

DETAILED DESCRIPTION

[0034] **FIG. 1** illustrates the structure and components of a traditional direct-lit backlight **10**, such as those presently used in LCD televisions. The traditional backlight **10** includes an array of light bulbs **15**, typically CCFLs, and a shaped reflector **17** located behind the array of light bulbs **15** for directing more light toward a viewer. A thick diffuse plate **18** is usually placed over the array of light bulbs **15** to diffuse light from the individual bulbs, e.g., CCFLs, in order to hide them from the viewer. A typical diffuser plate **18** has a large amount of absorption associated with it, as well as a large amount of back scattering, the effects of which grow exponentially if light-recycling enhancement films (described below) are added to the backlight. To further aid in hiding individual light bulbs from the viewer, diffuser plates have been patterned, which resulted in additional losses of light.

[0035] The traditional backlight **10** further includes a thin diffuser sheet **16** and a layer of enhancement film **14** having prismatic surface structures, such as Vikuiti™ Brightness Enhancement Film BEF, available from 3M Company. The enhancement film **14** refracts light within a certain angle toward the viewer. Light outside that angle is "recycled," i.e., reflected back into the backlight **10**, where it travels within the system until reaching the proper angle for exiting the system. In addition, the traditional backlight **10** includes a layer of reflective polarizer **12** placed over the enhancement film **14**. The reflective polarizer **12** is usually a multilayer reflective polarizer, such as Vikuiti™ Dual Brightness Enhancement Film (DBEF), also available from 3M Company. The reflective polarizer **12** transmits light with a predetermined polarization, while reflecting light with a different polarization into the backlight **10** where the polarization state is altered and the light is fed back to the reflective polarizer **12**. This process is also referred to as "recycling."

[0036] **FIG. 2** shows a schematic cross-sectional view of a backlighting system **100** constructed according to an exemplary embodiment of the present disclosure. The backlighting system **100** includes a first lightguide **130** and a second lightguide **140**. In the exemplary embodiment shown in **FIG. 2**, pairs of light sources **165***a* and **165***b* are placed at the edges **132***a* and **132***b* of the first lightguide **130**, so that at least a portion of the light emanating from the sources **165***a*, **165***b* is coupled into the interior of the lightguide **130** and propagates along its length by reflecting from the surfaces **130***a* and **130***b*, e.g., by total internal reflection. Lamp cavity reflectors **156***a*, **156***b* may be provided as illustrated in **FIG. 2**, for increasing coupling efficiency from the sources **165***a*, **165***b* into the interior of the lightguide **130**. As will be understood by those of ordinary skill in the art, shape and structure of the reflectors **156***a*, **156***b* may vary.

[0037] Referring further to **FIG. 2**, in the exemplary backlighting system **100**, pairs of light sources **185***a* and **185***b* are placed at the edges **142***a* and **142***b* of the second lightguide **140**, so that at least a portion of the light emanating from the sources **185***a*, **185***b* is coupled into the interior of the lightguide **140** and propagates along its length by reflecting from the surfaces **140***a* and **140***b*, e.g., by total internal reflection. Lamp cavity reflectors **176***a*, **176***b*, similar to the lamp cavity reflectors **156***a* and **156***b*, may be provided as illustrated in **FIG. 2** for increasing coupling efficiency from the sources **185***a*, **185***b* into the interior of the lightguide **140**. As will be understood by those of ordinary skill in the art, shape and structure of the reflectors **176***a*, **176***b* may also vary.

[0038] Although the exemplary backlighting system **100** illustrated in **FIG. 2** shows pairs of light sources **165***a*, **165***b* placed at the edges **132***a*, **132***b* of the lightguide **130** and pairs of light sources **185***a*, **185***b* placed at the edges **142***a*, **142***b* of the lightguide **140**, the present disclosure also contemplates using one, three or more light sources at an edge of the lightguide **130** and one, three or more light sources at one or more edges of the lightguide **140**. In addition, although for ease of illustration light sources **165***a* and **165***b* are shown to be aligned with the light sources **185***a* and **185***b*, the present disclosure contemplates placing light sources at any one or more edges of each lightguide, as desired for a specific application. For example, **FIGS. 2A and 2B**, illustrate two exemplary ways of arranging light sources **135***a*', **135***a*", **145***a*', **145***a*" and **135***b*', **135***b*", **145***b*', **145***b*" at the edges of generally rectangular lightguides **130***a*, **140***a* and **130***b*, **140***b* respectively.

[0039] Light sources suitable for use with embodiments of the present disclosure include any source that emits light,

such as a fluorescent lamp (e.g., CCFL), a hot cathode fluorescent lamp (HCFL), an incandescent lamp, an electroluminescent light source, a phosphorescent light source, an external electrode fluorescent lamp, a light emitting diode (LED), including organic LEDs (OLEDs), an array of LEDs, any other suitable light source(s), or any appropriate number or combination thereof.

[**0040**] The number and type of lightguides may also vary. For example, three or more lightguides may be used in accordance with the present disclosure and any one or more of the constituent lightguides may be hollow. Increasing the number of lightguides in backlighting systems according to exemplary embodiments of the present disclosure would lead to corresponding increases in weights and thicknesses of displays. However, most manufacturers of large panel LCDs typically consider display thickness and weight to be secondary concerns. Lifetime, brightness, spatial uniformity, ease of assembly, and reduction in warp of enhancement films are usually considered to be more important.

[**0041**] The number and type of light sources arranged at an edge of a lightguide, e.g., **130** or **140**, as well as the number, dimensions and type of lightguides will depend on the specific application and luminance target, as well as practical considerations such as the size of the specific source as compared to the dimensions of the lightguide. For example, assuming that lightguides **130** and **140** have about the same thicknesses as those typically seen in traditional single-lightguide edge-lit displays, up to six bulbs of typical CCFLs may be used per lightguide (e.g., three bulbs at each of the edges **132***a*, **132***b*, **142***a*, and **142***b*). Thus, a **29**" direct-lit LCD television backlight having **12** light bulbs can be replaced with a two-lightguide system illustrated in **FIG. 2**, with three bulbs arranged at each lightguide edge (e.g., **132***a*, **132***b*, **142***a* and **142***b*). A **32**" direct-lit LCD television with 16 light bulbs would require a three-lightguide system to make it completely edge-lit in order to produce comparable luminance.

[**0042**] Referring further to **FIG. 2**, the backlighting system **100** may include a first recycling enhancement structure **112** disposed at a surface of the first lightguide **130**. In the context of the present disclosure, "a recycling enhancement structure" may be any structure that is capable of "recycling" light in a manner similar or equivalent to the enhancement films **12** and **14**, described with reference to **FIG. 1**. Preferably, the first recycling enhancement structure **112** is disposed at the surface **130***a* and includes a reflective polarizer, such as a multilayer reflective polarizer Vikuiti™ Dual Brightness Enhancement Film (DBEF), available from 3M Company. Most preferably, the first recycling enhancement structure **112** also includes a diffuser, which may be integrated within the reflective polarizer or be included as a separate component, such as a matte surface or a layer of pressure sensitive adhesive (PSA). One function of the diffuser is the randomization of the polarization and direction of the light reflected by the reflective polarizer back into the backlighting system **100**. Exemplary components suitable for use within the first recycling enhancement structure **112** include Vikuiti™ Diffuse Reflective Polarizer Film (DRPF) and Vikuiti™ Dual Brightness Enhancement Film-Matte (DBEF-M), both available from 3M Company.

[**0043**] The first recycling enhancement structure **112** preferably is attached to a surface of the first lightguide **130**, e.g., surface **130***a*. The first recycling enhancement structure **112** may be attached to a surface of the first lightguide **130** by lamination, molding the enhancement structure **112** or any of its constituent components into the lightguide or by any suitable bonding technique. If the first recycling enhancement structure **112** includes a matte surface, e.g., as in DBEF-M, the first recycling enhancement structure **112** preferably is attached to the lightguide **130** so that the matte surface faces the surface **130***a*. In exemplary embodiments of the present disclosure, in which the first recycling enhancement structure **112** is attached to the first lightguide **130**, light may be extracted from the interior of the first lightguide **130** through its interactions with the first recycling enhancement structure **112**. For example, if DRPF or DBEF-M is included into the structure **112**, light is diffused by either of these films and it is either transmitted to the LCD in the proper polarization state or scattered back into the backlight **100**, where it can be recycled as explained above. Alternatively, DBEF may be attached to a surface of the first lightguide **130** with a layer of PSA. In that case, PSA would also facilitate the extraction of light from the interior of the first lightguide **130**.

[**0044**] In appropriate exemplary embodiments of the present disclosure, both DBEF and DRPF may be included into the first recycling enhancement structure **112** and preferably attached, e.g., laminated, to the surface **130***a* of the lightguide **130**. In that case, the polarization axes of both reflective polarizers, i.e., DBEF and DRPF should be aligned. As a result, DRPF will facilitate extraction of light from the lightguide **130**, while DBEF will enhance the contrast. Alternatively, BEF or another suitable prismatic film or structure may be used in combination with a reflective polarizer, e.g., DBEF, as a part of the first recycling enhancement structure **112**. BEF would facilitate light extraction, while DBEF would ensure that light exits the backlight **100** with the appropriate polarization.

[**0045**] Additionally or alternatively, the backlighting system **100** illustrated in **FIG. 2** may include a second recycling enhancement structure **114**, which may be disposed between the first lightguide **130** and the second lightguide **140**. Preferably, the second recycling enhancement structure **114** includes prismatic structures, e.g., prismatic structured film, that would aid in redirecting and recycling light to increase on-axis brightness of the backlight **100** by refracting toward the viewer light within a certain angle and reflecting back light outside that angle. One example of such prismatic structured films suitable for use within the second recycling enhancement structure **114** is Vikuiti™ Brightness Enhancement Film (BEF), available from 3M Company. The second recycling enhancement structure **114** also may include prismatic structures oriented so that the prism apexes are facing generally away from the lightguide **130**.

[**0046**] In the appropriate exemplary embodiments of the present disclosure, two BEFs or similar prismatic films or structures may be used in the second recycling enhancement structure **114**. In such exemplary embodiments, the directions of the prismatic films' grooves preferably are crossed, and a thin layer of adhesive joins the films so that only small portions of the prismatic structures are immersed into the adhesive. The second recycling enhancement structure **114** preferably is attached, e.g., laminated, molded or bonded using any other suitable technique, to the surface **130***b* of the lightguide **130**. This feature would create added extraction

from the first lightguide **130** and reduce warping of the second recycling enhancement structure **114**, which may occur due to temperature variations, handling and other causes.

[**0047**] Placing an extractor **143**, preferably a diffuse extractor, at a surface of the lightguide **140** may facilitate light extraction from the second lightguide **140**. **FIG. 2** illustrates the use of such an extractor **143**, which in this exemplary embodiment includes an array of dots disposed on the surface **140***b* of the lightguide **140**. Preferably, the pattern of dots is optimized to compensate for potential spatial non-uniformities of light extraction from the entire backlighting system **100**. For example, the dot pattern may be adjusted so that more light is extracted toward the center of the lightguide **140** by gradually increasing the size of dots toward the center of the lightguide **140**.

[**0048**] The backlighting system **100** may further include a diffuser sheet **116** and a reflector sheet **127**. The diffuser sheet primarily serves to increase spatial uniformity of the light exiting the second lightguide **140**, as well as to aid in randomizing polarization of the light reflected back into the backlight **100**. The reflector sheet **127** may further increase efficiency of the backlighting system **100** by reflecting back light that escapes through the side **140***b* of the lightguide **140**, so that the light may be directed toward the viewer and/or recycled.

[**0049**] **FIG. 3** is a schematic cross-sectional view of a backlighting system **200** constructed according to another exemplary embodiment of the present disclosure. The backlighting system **200** includes a first lightguide **230** and a second lightguide **240**. Pairs of light sources **265***a* and **265***b* are placed at the edges **232***a* and **232***b* of the first lightguide **230**, so that at least a portion of the light emanating from the sources **265***a*, **265***b* is coupled into the interior of the lightguide **230** and propagates along its length by reflecting from the surfaces **230***a* and **230***b*, e.g., by total internal reflection. Lamp cavity reflectors **256***a*, **256***b* may be provided for increasing coupling efficiency from the sources **265***a*, **265***b* into the interior of the lightguide **230**. As will be understood by those of ordinary skill in the art, shape and structure of the reflectors **256***a*, **256***b* may vary.

[**0050**] Referring further to **FIG. 3**, in the exemplary backlighting system **200**, pairs of light sources **285***a* and **285***b* are placed at the edges **242***a* and **242***b* of the second lightguide **240**, so that at least a portion of the light emanating from the sources **285***a*, **285***b* is coupled into the interior of the lightguide **240** and propagates along its length by reflecting from its surfaces **240***a* and **240***b*, e.g., by total internal reflection. Lamp cavity reflectors **276***a*, **276***b*, similar to the lamp cavity reflectors **256***a* and **256***b*, may be provided for increasing coupling efficiency from the sources **285***a*, **285***b* into the interior of the lightguide **240**. As will be understood by those of ordinary skill in the art, shape and structure of the reflectors **276***a*, **276***b* may also vary. As it has been explained in reference to the exemplary embodiments illustrated in **FIG. 2**, the number, type and configuration of light sources and lightguides may vary as well.

[**0051**] Referring further to **FIG. 3**, the backlighting system **200** may include a first recycling enhancement structure **212** disposed at a surface of the first lightguide **230**. Preferably, the first recycling enhancement structure **212** is disposed at the surface **230***a* and includes a reflective polarizer **212***b*, such as DBEF. Most preferably, the first recycling enhancement structure further includes a diffuser **212***a*, such as a loaded PSA structure, which also may be used to attach the reflective polarizer to a surface, e.g., surface **230***a*, of the first lightguide **230**. As illustrated in **FIG. 3**, the diffuser **212***a* may be spatially graded to improve the overall uniformity of the output from the backlighting system **200**. The backlighting system **200** may also include optically clear surface extraction features **245**, such as step-wedge structures disposed on the surface **230***b*, which would facilitate extraction of light from the first lightguide **230**. Those of ordinary skill in the art will readily recognize that such surface extraction features **245** may be used as appropriate in other exemplary embodiments of the present disclosure.

[**0052**] The remainder of the backlighting system **200** may have a structure similar to that of the embodiments illustrated in **FIG. 2** or a different suitable structure. For example, the backlighting system **200** may include a second recycling enhancement structure **214**, which may be disposed between the first lightguide **230** and the second lightguide **240**. Preferably, the second recycling enhancement structure **214** includes prismatic structures, e.g., prismatic structured film such as BEF, which redirect and recycle light to increase on-axis output brightness of the backlighting system **200** by refracting toward the viewer light within a certain angle and reflecting back light outside that angle.

[**0053**] Light extraction from the second lightguide **240** may be accomplished by placing an extractor **243**, preferably a diffuse extractor, at a surface of the lightguide **240**. **FIG. 3** illustrates the use of such an extractor **243**, which in this exemplary embodiment includes an array of dots disposed on the surface **240***b* of the lightguide **240**. Preferably, the pattern of dots is optimized to compensate for potential spatial non-uniformities of light extraction from the entire backlighting system **200**. For example, the dot pattern may be adjusted so that more light is extracted toward the center of the lightguide **240** by gradually increasing the size of dots toward the center of the lightguide **240**.

[**0054**] **FIG. 4** illustrates a backlighting system **300** constructed according to another exemplary embodiment of the present disclosure. The backlighting system **300** includes a first lightguide **330** and a second lightguide **340**. As it has been explained in reference to other exemplary embodiments, pairs of light sources **365***a* and **365***b* are placed at the edges **332***a* and **332***b* of the first lightguide **330**, and pairs of light sources **385***a* and **385***b* are placed at the edges **342***a* and **342***b* of the second lightguide **240**. Preferably, lamp cavity reflectors **356***a*, **356***b* and **376***a*, **376***b* are provided for increasing coupling efficiency from the sources **365***a*, **365***b* and **385***a*, **385***b* into the lightguides **330** and **340**. As will be understood by those of ordinary skill in the art, shape and structure of the reflectors may vary. The number, type and configuration of light sources and the number and configuration of lightguides may vary as well.

[**0055**] In the exemplary backlighting system **300**, the first lightguide **330** may include two wedge lightguides **336***a* and **336***b* joined at a juncture or seam **336***c*, or a single lightguide molded so that the surface **330***a* is generally flat while the surface **330***b* has a cross-section approximating the shape of an inverted V, with the thickness of the lightguide **330**

tapering away from the light sources, as illustrated in **FIG. 4**. A first recycling enhancement structure **312** may be disposed at a surface of the first lightguide **330**. Preferably, the first recycling enhancement structure **312** is disposed at the surface **330***a* and includes a reflective polarizer, such as DBEF. Most preferably, the first recycling enhancement structure **312** also includes a diffuser, which may be integrated within the reflective polarizer or be included as a separate component, such as a matte surface or a layer of PSA. Examples of structures suitable for use within the first recycling enhacement structure **312** in exemplary embodiments of the present disclosure include DRPF and DBEF-M.

[**0056**] The first recycling enhancement structure **312** preferably is attached to the surface **330***a* of the first lightguide **330**, e.g., by lamination, molding the enhancement structure **312** or any of its constituent components into the lightguide or by any suitable bonding technique. Extraction of light from the first lightguide **330** in such exemplary embodiments may be achieved by total internal reflection failure and interactions with the attached first recycling enhancement structure **312**.

[**0057**] The remainder of the backlighting system constructed according to this exemplary embodiment may have a structure similar to the embodiments illustrated in **FIGS. 2 and 3**, or a different suitable structure. For example, the backlighting system **300** may include a second recycling enhancement structure **314** disposed between the first lightguide **330** and the second lightguide **340**. Preferably, the second recycling enhancement structure **314** includes prismatic structures, e.g., prismatic structured film such as BEF, that redirect and recycle light to increase on-axis brightness of the backlight **300** by refracting toward the viewer light within a certain angle and reflecting back light outside that angle. In the appropriate exemplary embodiments, the second recycling enhancement structure **314** may include prismatic structures having prism apexes that face generally away from the light guide **330**.

[**0058**] Light extraction from the second lightguide **340** may be accomplished by placing an extractor **343**, preferably a diffuse extractor, at a surface of the lightguide **340**. The extractor **343** may include an array of dots disposed on the surface **340***b* of the lightguide **340**. Preferably, the pattern of dots is optimized to compensate for potential spatial non-uniformities of light extraction from the entire backlighting system **300**. For example, if two wedge lightguides **336***a* and **336***b* are used to form the lightguide **330**, extraction of light from the second lightguide **340** may be adjusted to hide the juncture or seam **336***c* from the viewer by a flood of light. This may be accomplished by increasing the size of dots in a dot pattern toward the center of the lightguide **340**.

[**0059**] **FIG. 5** shows a schematic cross-sectional view of a backlighting system **400** according to another exemplary embodiment of the present disclosure. The backlighting system **400** includes a first lightguide **430** and a second lightguide **440**. As it has been explained in reference to other exemplary embodiments, pairs of light sources **465***a* and **465***b* are placed at the edges **432***a* and **432***b* of the first lightguide **430**, and pairs of light sources **485***a* and **485***b* are placed at the edges **442***a* and **442***b* of the second lightguide **440**. Lamp cavity reflectors **456***a*, **456***b* and **476***a*, **476***b* may be provided for increasing coupling efficiency from the sources **465***a*, **465***b* and **485***a*, **485***b* into the lightguides **430** and **440**. As will be understood by those of ordinary skill in the art, shape and structure of the reflectors may vary. The number, type and configuration of light sources and lightguides may vary as well.

[**0060**] Referring further to **FIG. 5**, the backlighting system **400** may include a recycling enhancement structure **426** disposed at the surface **430***a* of the first lightguide **430**. Preferably, the recycling enhancement structure **426** includes a reflective polarizer, such as DBEF, and prismatic structures, e.g., a prismatic structured film such as BEF. The prismatic structures may be introduced into the backlight **400** by appropriately molding the first lightguide **430**, laminating a sheet of prismatic film onto the surface **430***a*, or by any other suitable technique. The reflective polarizer, e.g., DBEF, also may be attached to the lightguide **430**, e.g., by lamination, molding or another suitable bonding technique, preferably over the prismatic structures. Variations may be introduced into the recycling enhancement structure **426**, and particularly into the prismatic structures, to enhance extraction of light from the first lightguide **430** as well as to increase off-axis brightness. See, e.g., U.S. Pat. No. 6,354,709, the disclosure of which is incorporated by reference herein to the extent not inconsistent with the present disclosure. In the appropriate exemplary embodiments, the recycling enhancement structure may include prismatic structures having prism apexes that face generally forward the first lightguide **430**.

[**0061**] The second lightguide **440** may include an extractor **443**, preferably a diffuse extractor, disposed at a surface of the lightguide **440**. As in other embodiments described herein, the extractor **443** may be disposed on the surface **440***b* of the lightguide **440** and may include an array of dots. Preferably, the pattern of dots is optimized to compensate for potential spatial non-uniformities of light extraction from the entire backlighting system **400**. The backlighting system **400** may further include a diffuser sheet **416**, which would aid in hiding the diffuse extractor **443** from the viewer and randomizing polarization of recycled light, and a reflector sheet **427**.

[**0062**] Series of experiments were conducted to test various aspects of exemplary embodiments of the present disclosure. **FIG. 6** illustrates a testing configuration **700** for exemplary embodiments of the present disclosure. The testing configuration **700** includes a bottom lightguide **740**, illuminated by two CCFL light source assemblies **780***a*, **780***b*, with a reflector **727** disposed below the lightguide **740** and a diffuser sheet **716** disposed over the lightguide **740**. Crossed BEFs **714***a*, **714***b* were also included into the testing configuration **700** and positioned over the diffuser sheet **716**. The top lightguide **730** in this configuration was a wedge lightguide laminated with strips of DBEF-M (diffuse side toward lightguide) and DRPF, designated as **712** and located side-by-side. The light source **760** for illuminating the top lightguide **730** was an incandescent fiber line source. An absorbing polarizer **772** was placed over the top lightguide **730** so that it could be aligned or anti-aligned with the reflective polarizer or completely removed.

[**0063**] Conoscopic measurements were then taken using ELDIM EZContrast160. All measurements were made at a constant distance from the fiber source to eliminate effects of down-wedge spatial non-uniformities. Performance

improvements were seen despite the fact that the output luminance of the wedge lightguide **730** and fiber source **760** was more than an order of magnitude smaller than that of the bottom lightguide **740** illuminated by the CCFL source assemblies **780***a* and **780***b*.

[**0064**] **FIGS. 7A-7C** show results of the first set of measurements, illustrating properties of light extracted from the top lightguide **730** laminated with the reflective polarizers **712**. The absorbing polarizer **772** was not used in these measurements. **FIG. 7A** represents light extraction form the bare top lightguide **730** (no reflective polarizers), **FIG. 7B** represents light extraction from the top lightguide **730** laminated with DBEF-M, and **FIG. 7C** represents light extraction from the top lightguide **730** laminated with DRPF. Extraction from the bare lightguide **730** occurs by total internal reflection failure. The data represented in **FIGS. 7A-7C** demonstrate effectiveness of light extraction from the top lightguide **730** via interactions with the laminated DBEF-M and DRPF. FIGS. **8**A-E and **9**A-E show results of measurements comparing polarization content of the extracted light to that of light transmitted through the reflective polarizer **712**. **FIG. 8** shows the data for DRPF laminated onto the top lightguide **730** and **FIG. 9** shows the data for DBEF-M laminated onto the top lightguide **730**. Measurements corresponding to **FIGS. 8A, 8D**, **9**A and **9**D were made without the absorbing polarizer **772**, measurements corresponding to **FIGS. 8B, 8E**, **9**B and **9**E were made with the absorbing polarizer **772** aligned with the pass axis of the reflective polarizer **712**, and **FIGS. 8C, 8F**, **9**C and **9**F were made with the absorbing polarizer **772** anti-aligned with the pass axis of the reflective polarizer **712**. In each configuration, two measurements were made: 1) fiber source turned on and CCFL sources turned off (**FIGS. 8A, 8B**, **8**C, **9**A, **9**B and **9**C), and 2) fiber source turned off and CCFL sources turned on (**FIGS. 8D, 8E**, **8**F, **9**D, **9**E and **9**F). Overall, the data shown in FIGS. **8**A-E and **9**A-E demonstrate that light extracted from the top lightguide **730** is polarized predominantly with the same orientation as the light transmitted through the reflective polarizer **712**.

[**0065**] FIGS. **10**A-D show measurements performed to verify that the gain of the reflective polarizer **712** in the system **700** is not diminished because it is laminated to the top lightguide **730**. First, the top lightguide was removed and the reflective polarizer was positioned at **712**' in **FIG. 6**. Measurements were then made with a loose sheet of DBEF-M and then with the same lot of DBEF-M laminated to the top lightguide **730** (the fiber source was not turned on). The gain due to both the loose sheet and laminated DBEF-M was then computed by taking a ratio of the measurements with DBEF-M to the measurement with DBEF-M removed. The procedure was then repeated for DRPF. FIGS. **10**A-D show the results of these gain measurements. As can be seen, the gain for the systems with laminated reflective polarizers was slightly higher than that for the loose sheet versions. This occurred due to the fact that an air interface had been removed and some of the diffusivity of the samples had been wetted-out against the lightguide.

[**0066**] Thus, the backlighting systems constructed according to the present disclosure allow achieving high output luminances and address various problems encountered with the presently known backlights for LCDs. For example, the present disclosure mitigates the risks of using variable lifetime light sources, so that burnout or aging of an individual light source would not be catastrophic to the display viewing quality. Thus, if an individual light source ages or burns out in a multiple-lightguide system according to an embodiment of the present disclosure, the effect on spatial brightness and color uniformity will be relatively insignificant due to the enhanced light mixing.

[**0067**] The present disclosure eliminates the need for a thick diffuser plate traditionally used in direct-lit backlights to hide individual sources from the viewer, thus providing additional gains in brightness. The present disclosure also eliminates the need for a structured reflector surface traditionally used in single-cavity direct-lit backlights, resulting in cost reduction and increased ease of manufacturing. In addition, light extracted directly from the top lightguide is likely to exit at a wide range of angles, which would enhance off-axis viewability of the display. Moreover, the present disclosure makes possible inclusion of additional features for preventing warp and physical damage to various recycling enhancement structures, which may be used in exemplary embodiments of the present disclosure.

[**0068**] Although the backlighting systems of the present disclosure have been described with reference to specific exemplary embodiments, those of ordinary skill in the art will readily appreciate that changes and modifications may be made thereto without departing from the spirit and scope of the present invention. For example, the number, type and configuration of light sources, lightguides, and recycling enhancement structures used in exemplary embodiments of the present disclosure may vary. Any of the lightguides used in exemplary embodiments of the present disclosure may be a hollow lightguide or have another suitable structure. See, e.g., U.S. Patent Application entitled "Hybrid Lightguide Backlight," Attorney Case No. 59399US002, filed concurrently herewith and incorporated by reference herein to the extent not inconsistent with the present disclosure.

[**0069**] In addition, it will be understood by those of ordinary skill of the art, that the terms "prismatic structures, ""prismatic films" and "prisms" encompass those having structural and other variations, such as those described in U.S. Pat. No. 6,354,709, as well as prismatic structures having rounded peaks. Furthermore, although the present disclosure is particularly advantageous for use in large area, high luminance applications typically associated with LCD televisions, it could also encompass LCD monitors and point of sale devices.

What is claimed is:

1. A backlighting system, comprising:

a first lightguide having an interior;

at least one light source optically connected to an edge of the first lightguide for supplying light into the interior thereof;

a second lightguide having an interior;

at least one light source optically connected to an edge of the second lightguide for supplying light into the interior thereof; and

an extractor disposed at a surface of the second lightguide for diffuse extraction of light from the interior of the second lightguide;

wherein at least a portion of the light supplied into the interior of the second lightguide and then diffusely extracted therefrom enters the interior of the first lightguide through a substantially optically clear surface.

2. The backlighting system as recited in claim 1, further comprising a first recycling enhancement structure disposed at a surface of the first lightguide.

3. The backlighting system as recited in claim 2, wherein the first recycling enhancement structure comprises a reflective polarizer.

4. The backlighting system as recited in claim 3, wherein the first recycling enhancement structure further comprises a diffuser.

5. The backlighting system as recited in claim 4, wherein the diffuser is spatially graded.

6. The backlighting system as recited in claim 3, wherein the first recycling enhancement structure further comprises a prismatic structure.

7. The backlighting system as recited in claim 2, **3**, **4**, **5** or **6**, wherein the first recycling enhancement structure is attached to a surface of the first lightguide.

8. The backlighting system as recited in claim 1, further comprising a second recycling enhancement structure disposed between the first lightguide and the second lightguide.

9. The backlighting system as recited in claim 8, wherein the second recycling enhancement structure comprises a prismatic structure.

10. The backlighting system as recited in claim 8 or **9**, wherein the second recycling enhancement structure is attached to a surface of the first lightguide.

11. A backlighting system, comprising:

a first lightguide having an interior;

at least one light source optically connected to an edge of the first lightguide for supplying light into the interior thereof;

a second lightguide having an interior;

at least one light source optically connected to an edge of the second lightguide for supplying light into the interior thereof; and

a recycling enhancement structure disposed between the first lightguide and the second lightguide.

12. The backlighting system as recited in claim 11, wherein the recycling enhancement structure comprises a prismatic structure.

13. The backlighting system as recited in claim 12, wherein the prismatic structure comprises a surface defining a plurality of prisms having apexes pointing generally away from the second lightguide.

14. The backlighting system as recited in claim 11, wherein the recycling enhancement structure comprises a first surface defining a plurality of prisms substantially symmetric about a first horizontal axis and having apexes pointing generally away from the second lightguide and a second surface defining a plurality of prisms substantially symmetric about a second horizontal axis and having apexes pointing generally away from the second lightguide.

15. The backlighting system as recited in claim 14, wherein the first axis is generally orthogonal to the second axis.

16. The backlighting system as recited in claim 11, **12**, **13**, **14** or **15**, wherein the recycling enhancement structure is attached to a surface of the first lightguide.

17. The backlighting system as recited in claim 11, further comprising an additional recycling enhancement structure disposed at a surface of the first lightguide.

18. The backlighting system as recited in claim 17, wherein the additional recycling enhancement structure comprises a reflective polarizer.

19. The backlighting system as recited in claim 18, wherein the additional recycling enhancement structure further comprises a diffuser.

20. The backlighting system as recited in claim 17, wherein the additional recycling enhancement structure further comprises a prismatic structure.

21. The backlighting system as recited in claim 17, **18**, **19** or **20**, wherein the additional recycling enhancement structure is attached to a surface of the first lightguide.

22. The backlighting system as recited in claim 1 or **11**, wherein the first and second lightguides each comprise two opposing edges, at least one light source is optically connected to each of said edges, and the opposing edges of the first lightguide are not aligned with the opposing edges of the second lightguide.

23. The backlighting system as recited in claim 1 or **11**, wherein the first and second lightguides each comprise two adjacent edges, at least one light source is optically connected to each of said edges, and the adjacent edges of the first lightguide are not aligned with the adjacent edges of the second lightguide.

24. A backlighting system, comprising:

a first lightguide having an interior;

a plurality of light sources optically connected to a first edge of the first lightguide and a plurality of light sources optically connected to a second edge of the first lightguide for supplying light into the interior thereof;

a second lightguide having an interior;

a plurality of light sources optically connected to a first edge of the second lightguide and a plurality of light sources optically connected to a second edge of the second lightguide for supplying light into the interior thereof; and

an extractor disposed at a surface of the second lightguide for diffuse extraction of light from the interior thereof;

wherein at least a portion of the light supplied into the interior of the second lightguide and then diffusely extracted therefrom enters the interior of the first lightguide through a substantially optically clear surface.

25. The backlighting system as recited in claim 24, further comprising a first recycling enhancement structure disposed at a surface of the first lightguide.

26. The backlighting system as recited in claim 25, wherein the first recycling enhancement structure comprises a reflective polarizer.

27. The backlighting system as recited in claim 26, wherein the first recycling enhancement structure further comprises a diffuser.

28. The backlighting system as recited in claim 27, wherein the diffuser is spatially graded.

29. The backlighting system as recited in claim 28, wherein the first recycling enhancement structure further comprises a prismatic structure.

30. The backlighting system as recited in claim 25, **26**, **27**, **28** or **29**, wherein the first recycling enhancement structure is attached to a surface of the first lightguide.

31. The backlighting system as recited in claim 24, further comprising a second recycling enhancement structure disposed between the first lightguide and the second lightguide.

32. The backlighting system as recited in claim 31, wherein the second recycling enhancement structure comprises a prismatic structure.

33. The backlighting system as recited in claim 32, wherein the prismatic structure comprises a surface defining a plurality of prisms having apexes pointing generally away from the second lightguide.

34. The backlighting system as recited in claim 31, wherein the second recycling enhancement structure comprises a first surface defining a plurality of prisms substantially symmetric about a first horizontal axis and having apexes pointing generally away from the second lightguide and a second surface defining a plurality of prisms substantially symmetric about a second horizontal axis and having apexes pointing generally away from the second lightguide.

35. The backlighting system as recited in claim 34, wherein the first axis is generally orthogonal to the second axis.

36. The backlighting system as recited in claim 31, **32**, **33**, **34** or **35**, wherein the second recycling enhancement structure is attached to a surface of the first lightguide.

37. The backlighting system as recited in claim 1, **11** or **24**, wherein at least one of the first and the second lightguides has variable thickness.

38. The backlighting system as recited in claim 1, **11** or **24**, wherein at least one of the first and second lightguides comprises a first wedge portion and a second wedge portion.

39. The backlighting system as recited in claim 1 or **24**, wherein the extractor is spatially graded.

40. The backlighting system as recited in claim 1, **11** or **24**, further comprising substantially optically clear surface extraction structures disposed on a surface of the first lightguide that faces the second lightguide.

41. The backlighting system as recited in claim 1, **11** or **24**, further comprising a reflector sheet disposed next to a surface of the second lightguide that faces away from the first lightguide.

42. The backlighting system as recited in claim 1, **11** or **24**, further comprising a diffuser sheet disposed next to a surface of the second lightguide that faces the first lightguide.

* * * * *