US 20050265029A1

(19) United States

(12) Patent Application Publication

(10) Pub. No.: US 2005/0265029 A1

(43) Pub. Date: Dec. 1, 2005

Epstein et al.

(54) LED ARRAY SYSTEMS

(75) Inventors: **Kenneth A. Epstein**, Saint Paul, MN (US); **Hung T. Tran**, Woodbury, MN (US); **John C. Schultz**, Afton, MN (US); **Robert M. Emmons**, Saint Paul, MN (US)

Correspondence Address:
3M INNOVATIVE PROPERTIES COMPANY
PO BOX 33427
ST. PAUL, MN 55133-3427 (US)

(73) Assignee: **3M Innovative Properties Company**

(21) Appl. No.: **10/858,539**

(22) Filed: **Jun. 1, 2004**

Publication Classification

(51) **Int. Cl.**[7] **F21V 5/00**

(52) **U.S. Cl.** **362/339**; 362/231; 362/241; 362/246; 362/19

(57) **ABSTRACT**

A light emitting diode (LED) array comprises an array of LEDs mounted to a substrate. The LEDs emit light in a direction generally perpendicular to the substrate. An optical sheet is disposed over the LEDs. At least a portion of light entering one side of the optical sheet from the LEDs is guided within the optical sheet in a direction generally parallel to the substrate. Light extraction features direct light from the optical sheet in a generally forward direction. Such an array is useful for several applications, including space lighting, direct information display and backlighting of liquid crystal displays. The light spreading effect of the optical sheet reduces the amount of black space between LED pixels.

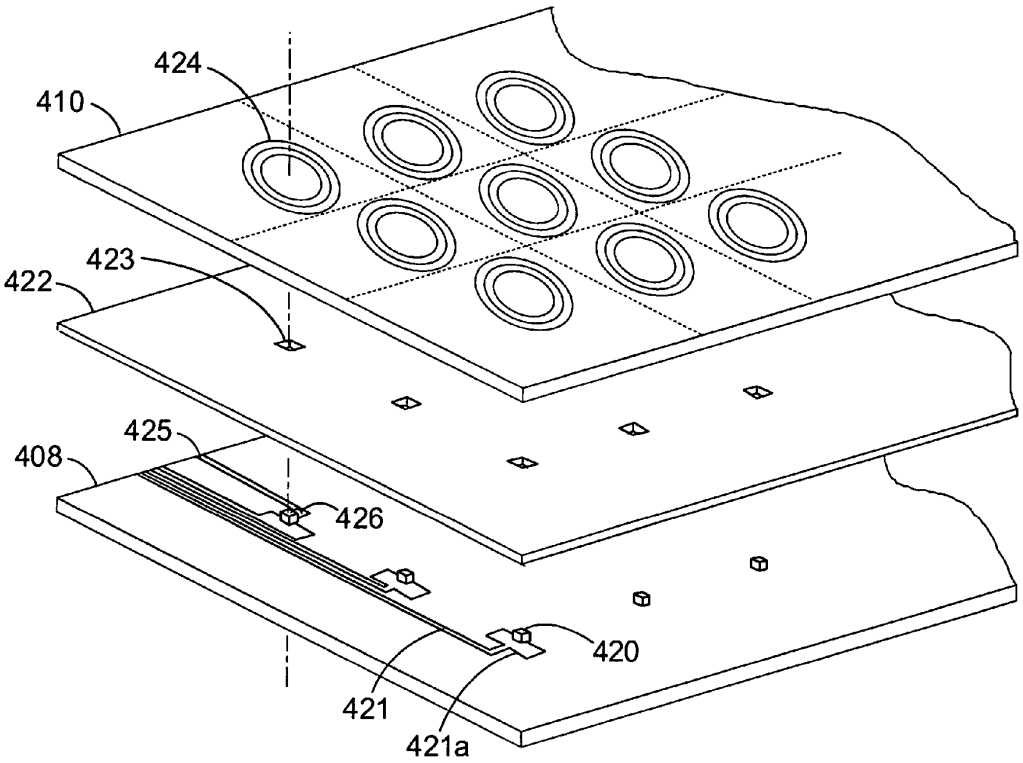

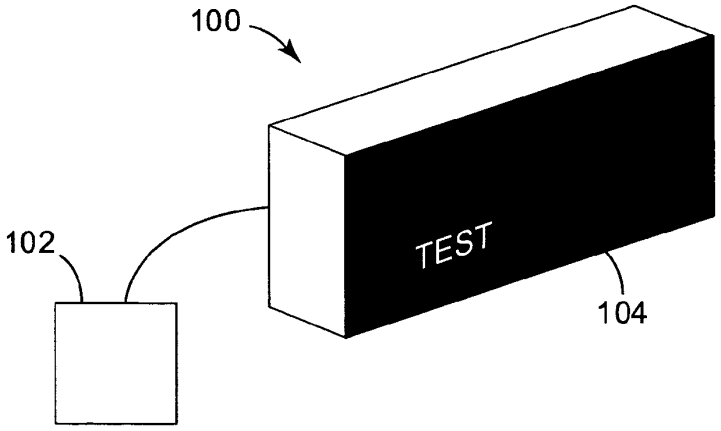

FIG. 1

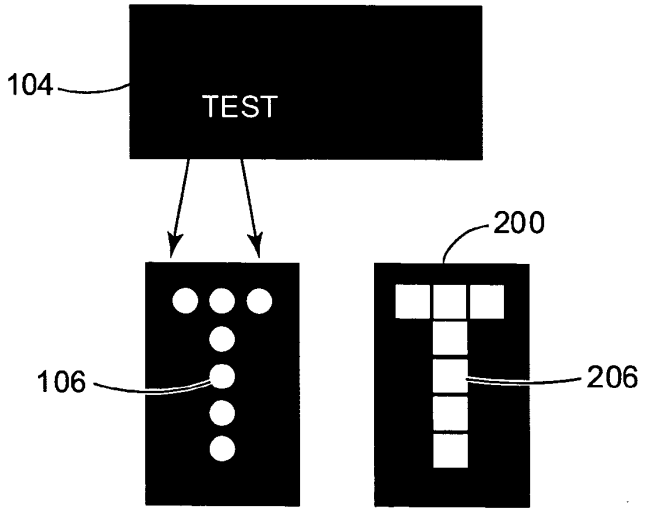

FIG. 2

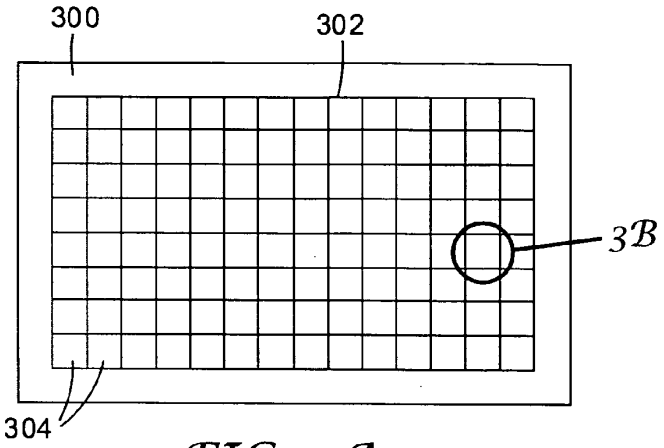

FIG. 3A

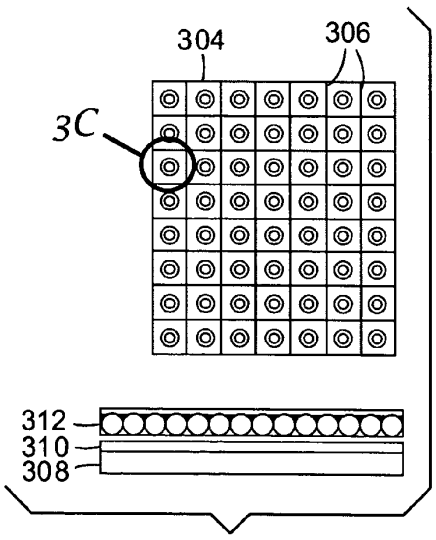

FIG. 3B

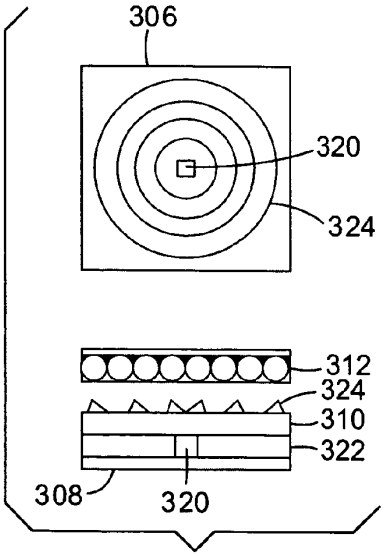

FIG. 3C

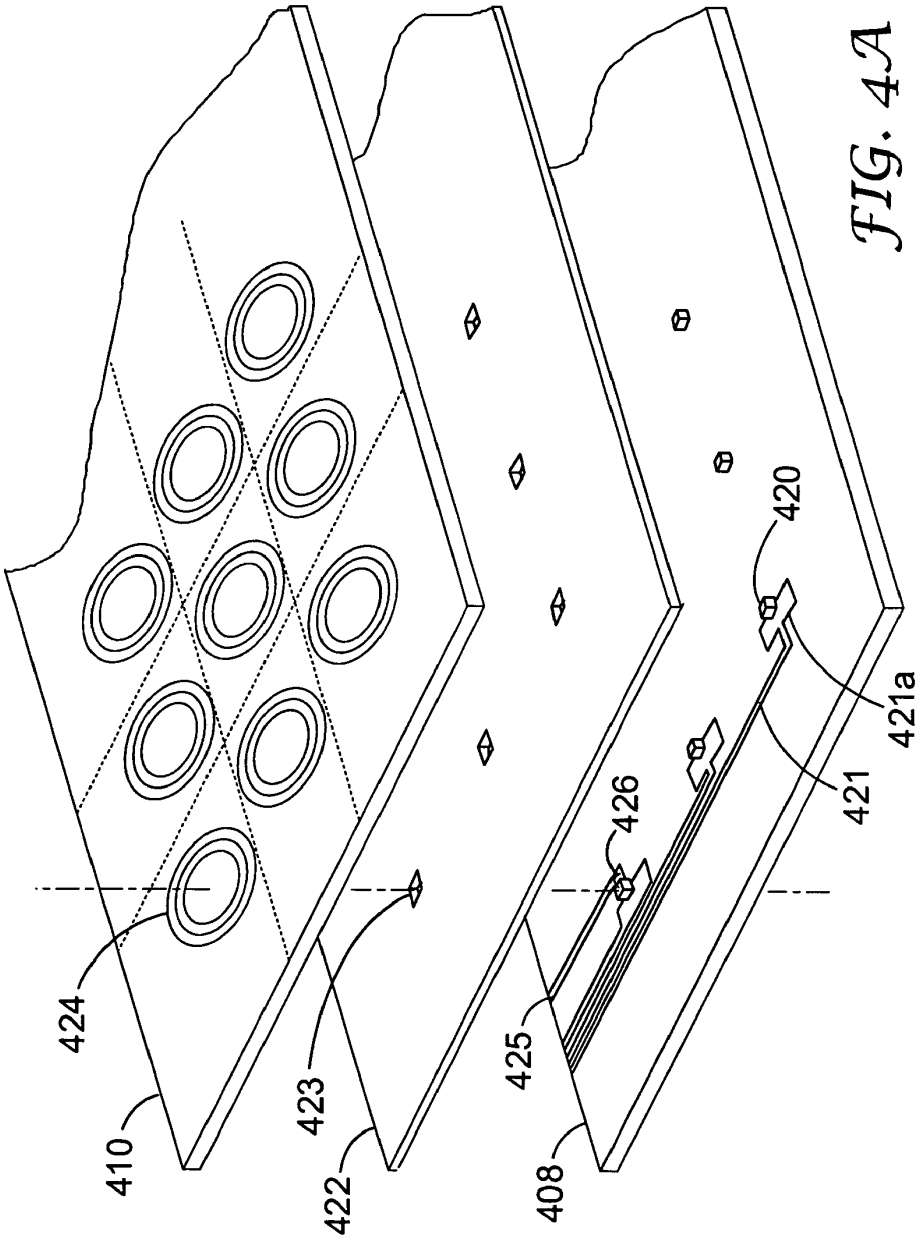

FIG. 4A

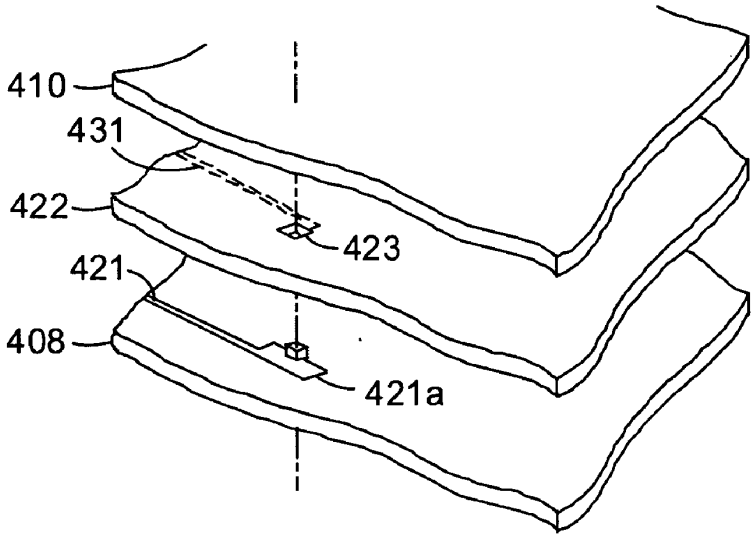

FIG. 4B

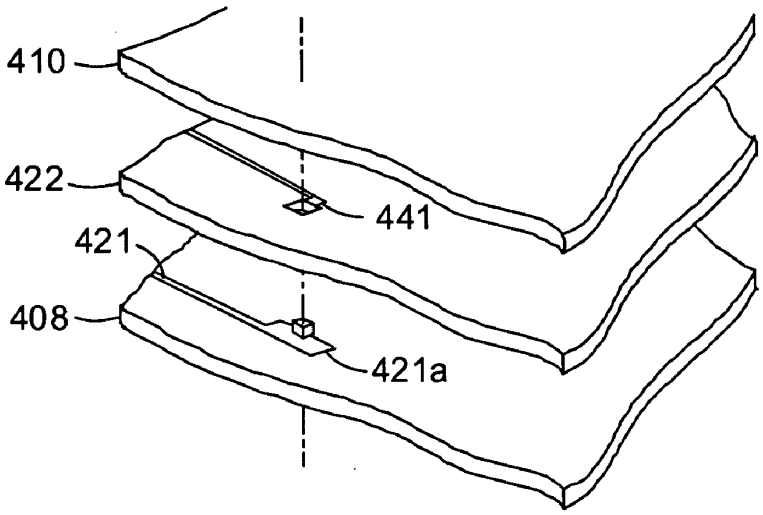

FIG. 4C

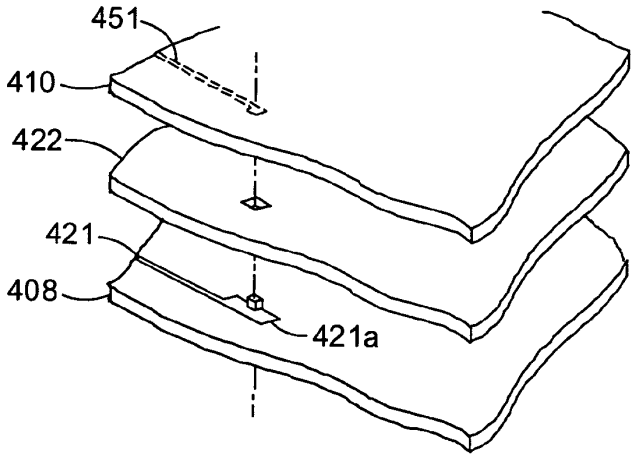

FIG. 4D

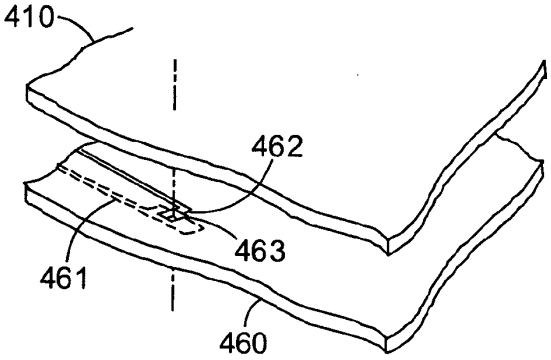

FIG. 4E

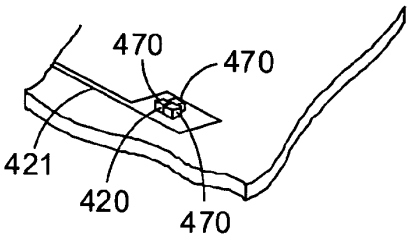

FIG. 4F

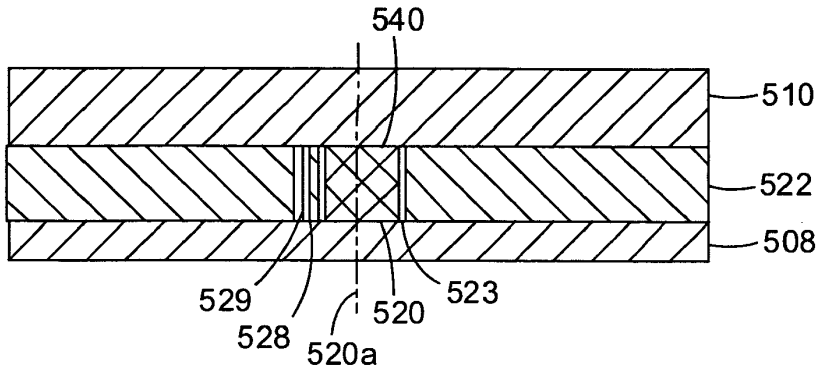

FIG. 5A

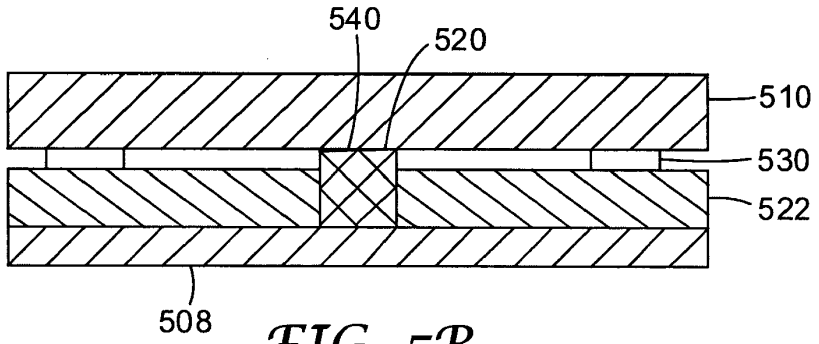

FIG. 5B

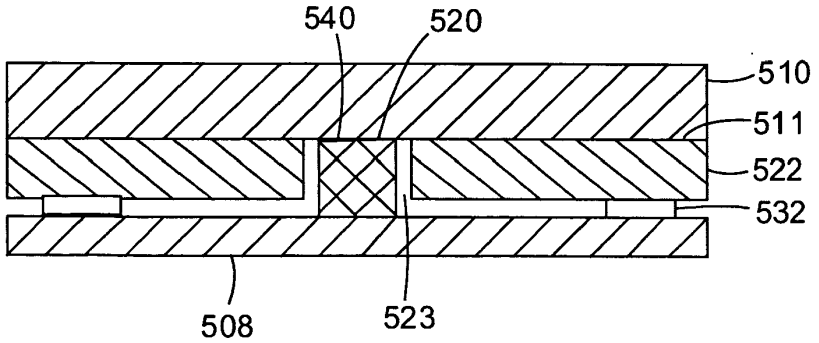

FIG. 5C

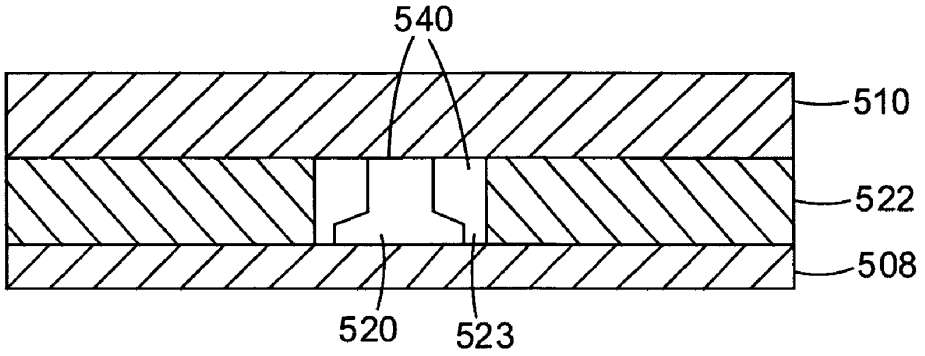

FIG. 5D

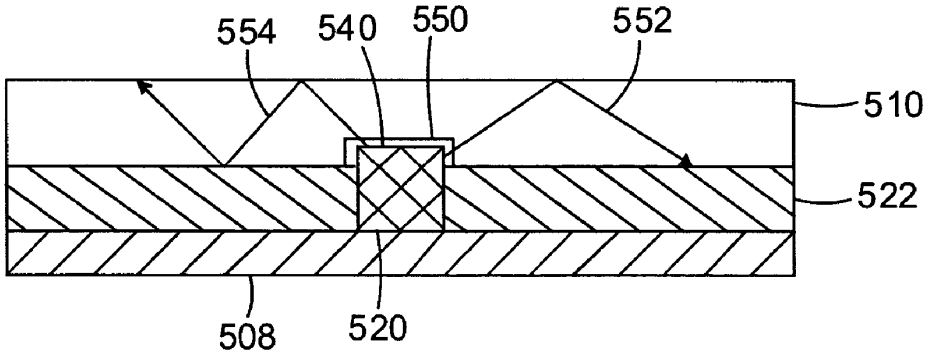

FIG. 5E

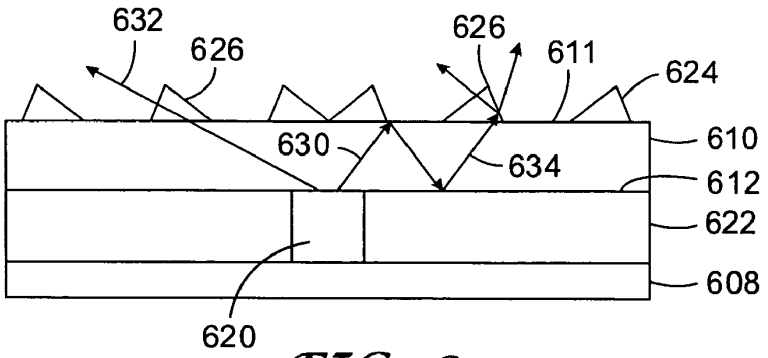

FIG. 6

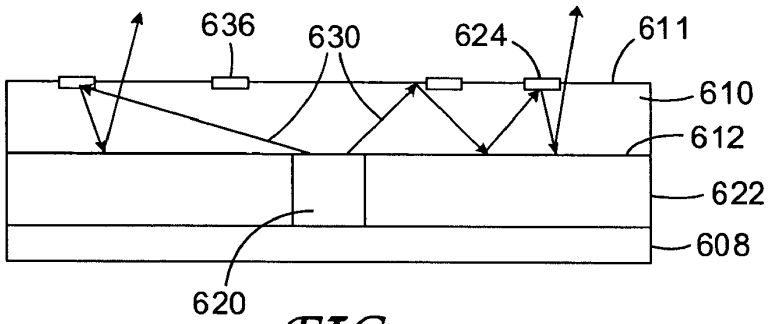

FIG. 7

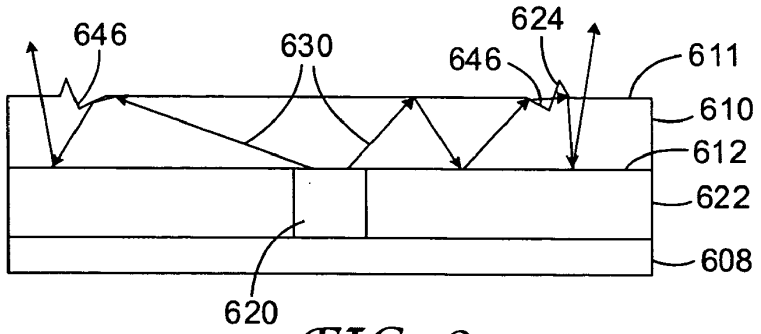

FIG. 8

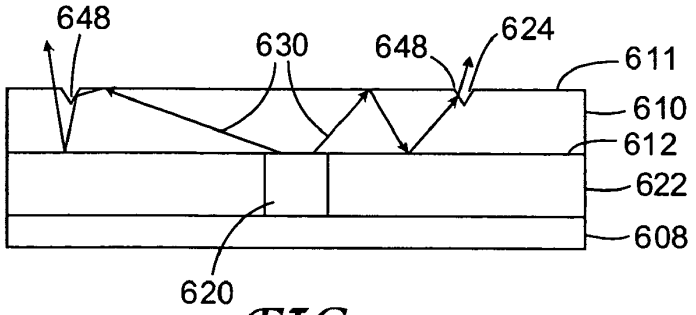

FIG. 9

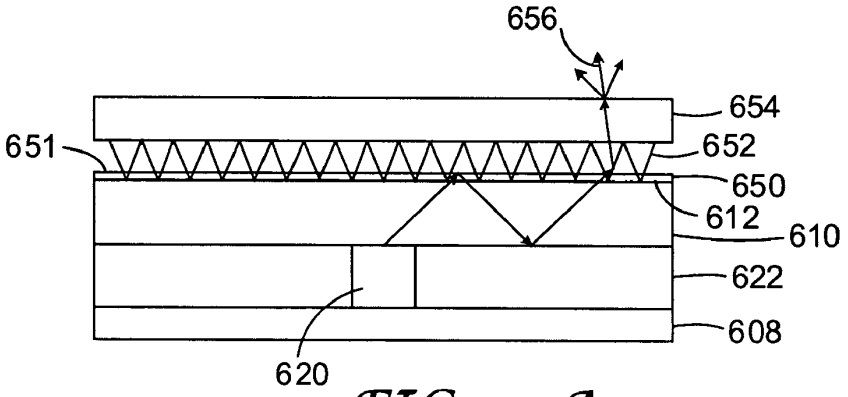

FIG. 10A

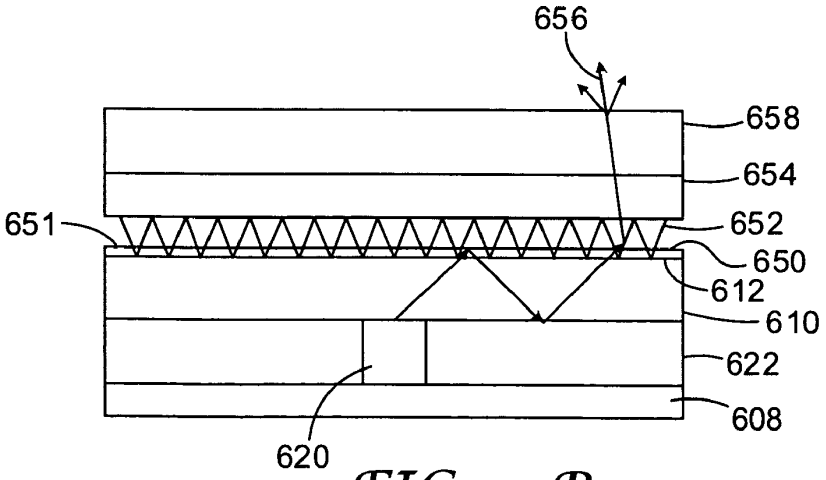

FIG. 10B

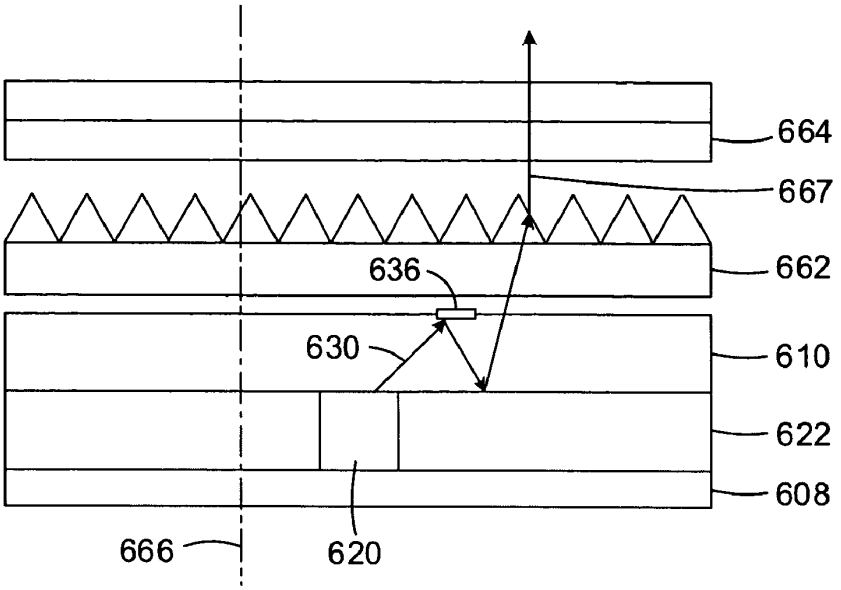
664
667
662
636
630
610
622
608
666
620

FIG. 11

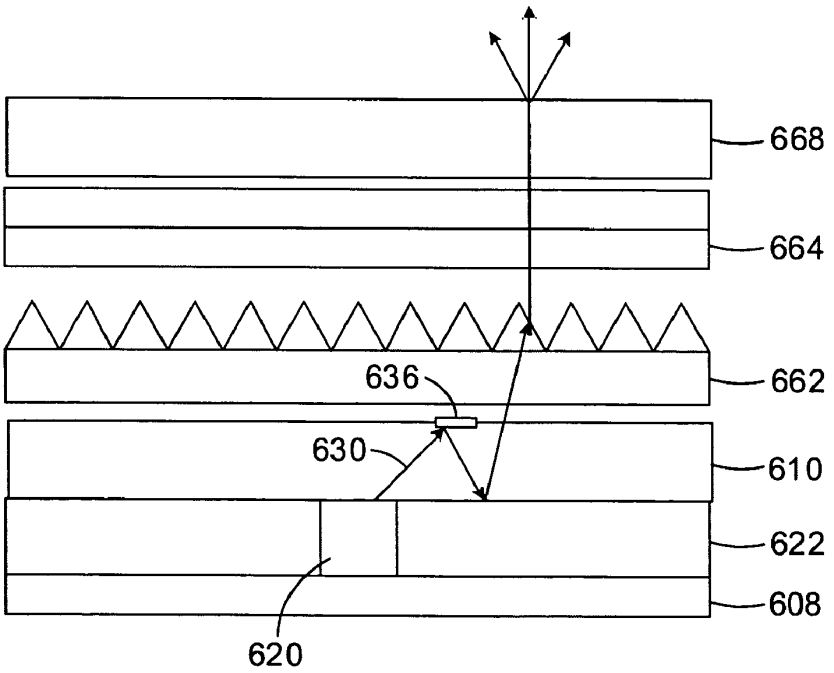
668
664
662
636
630
610
622
608
620

FIG. 12

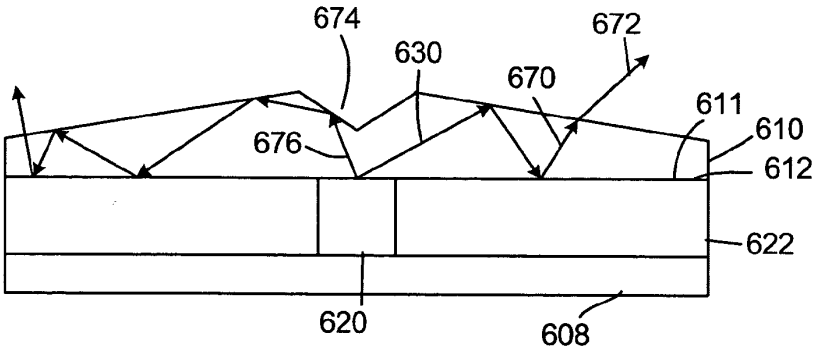

FIG. 13

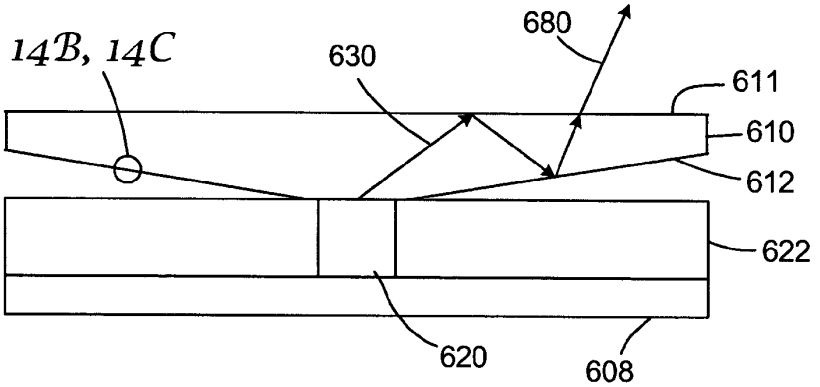

FIG. 14A

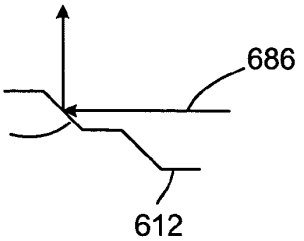

FIG. 14B

FIG. 14C

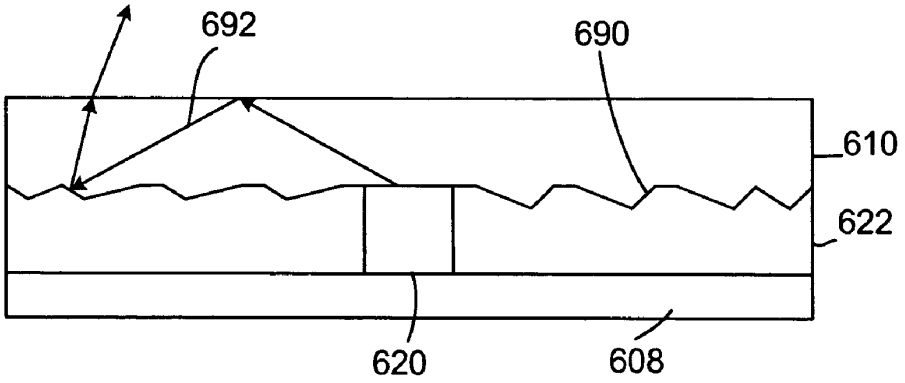

FIG. 15A

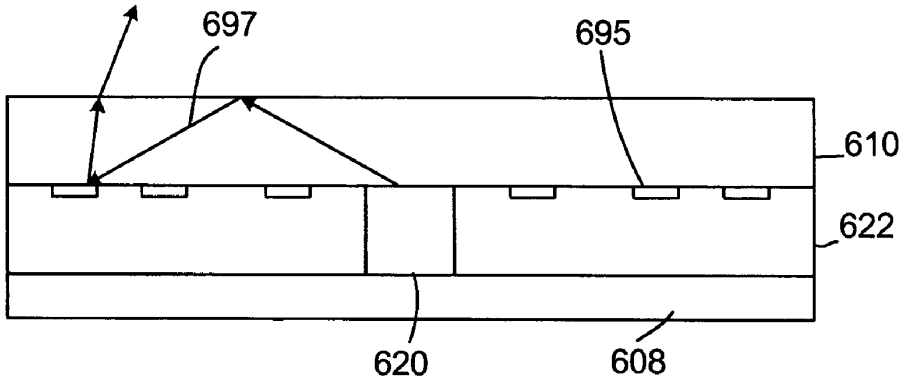

FIG. 15B

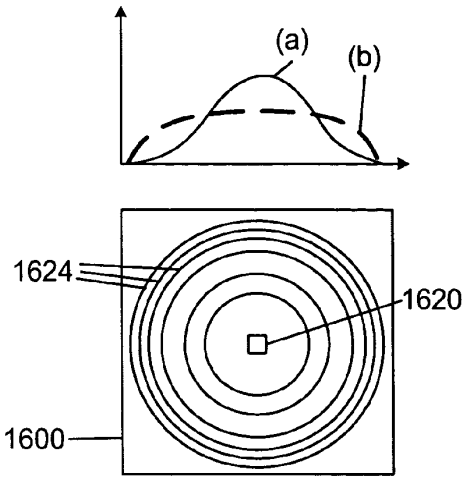

FIG. 16A

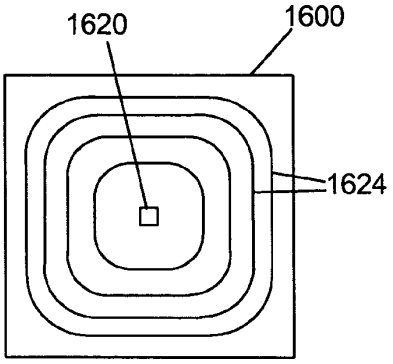

FIG. 16B

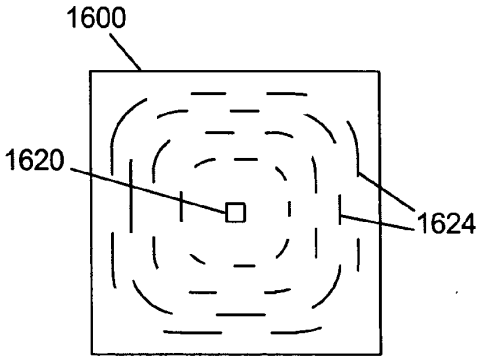

FIG. 16C

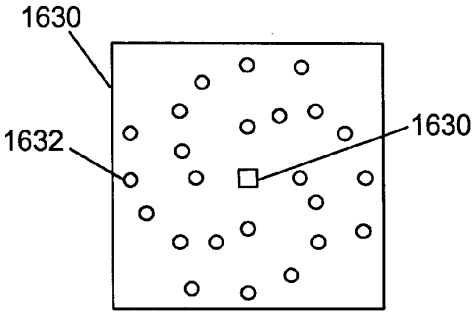

FIG. 16D

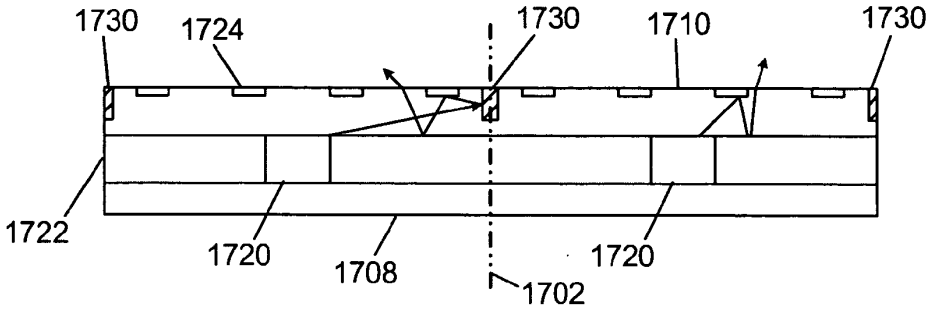

FIG. 17A

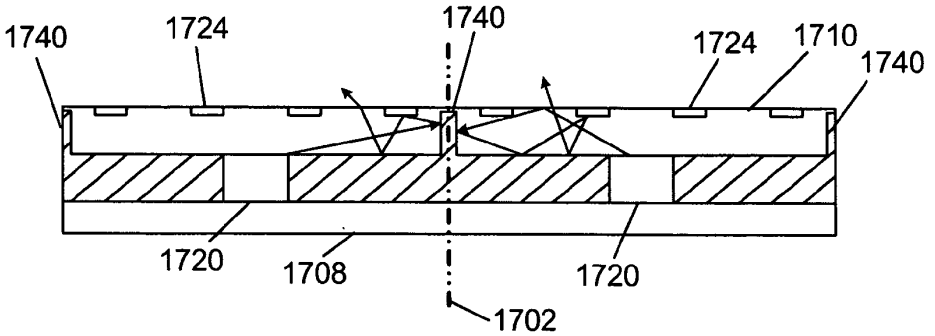

FIG. 17B

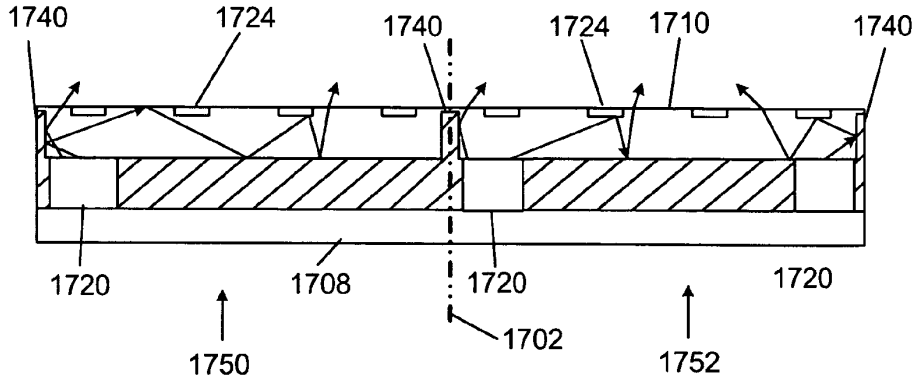

FIG. 17C

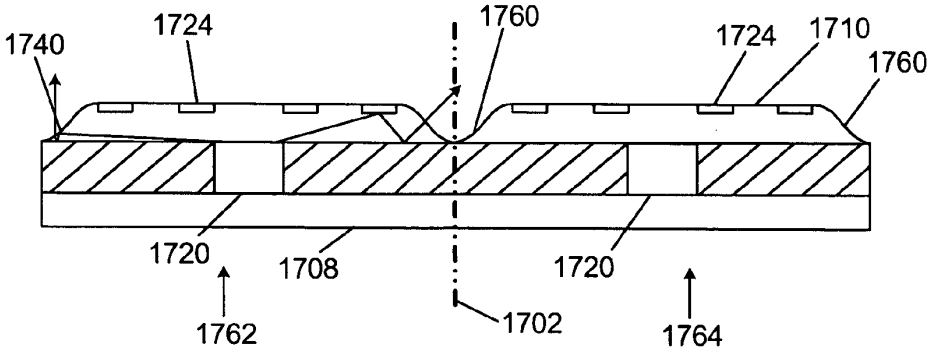

FIG. 17D

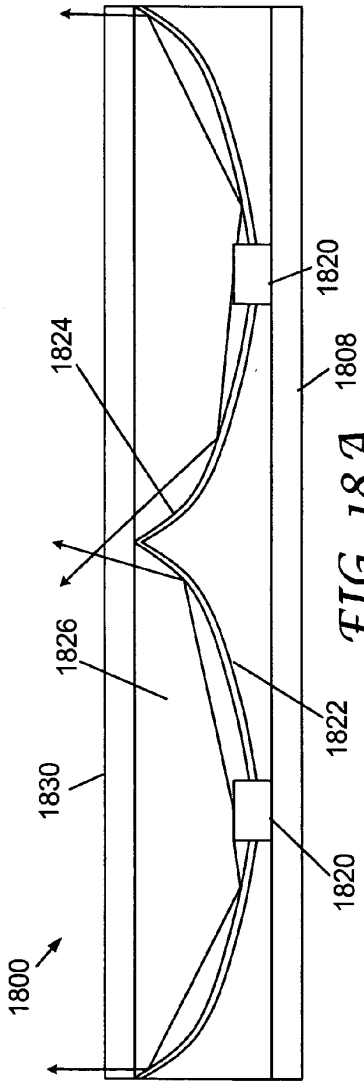

FIG. 18A

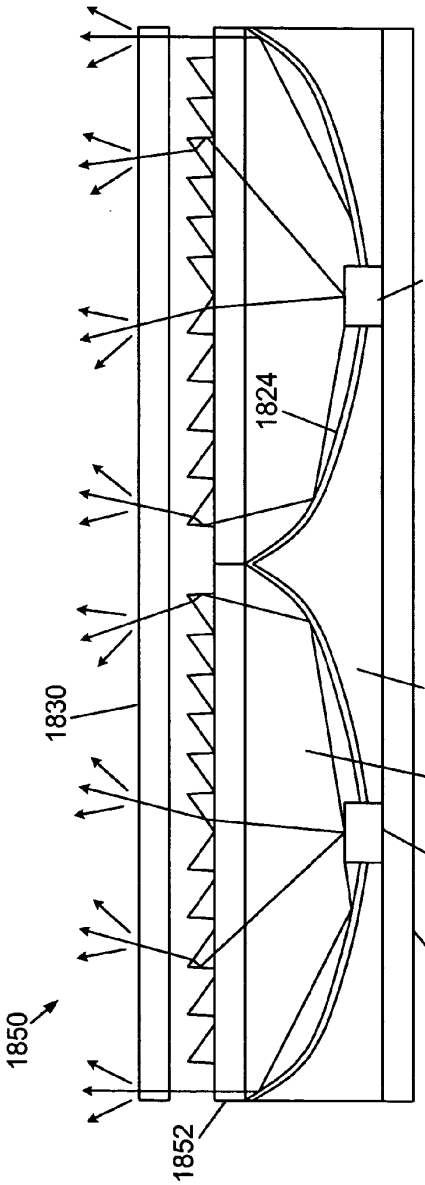

FIG. 18B

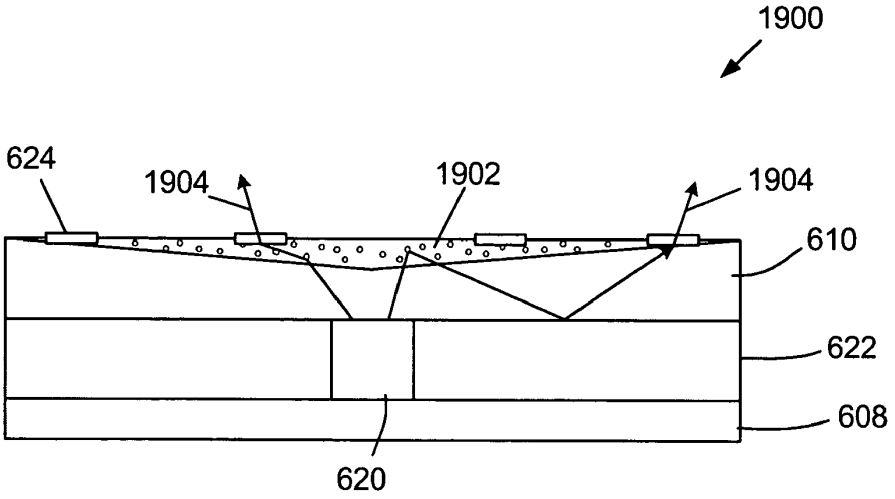

FIG. 19A

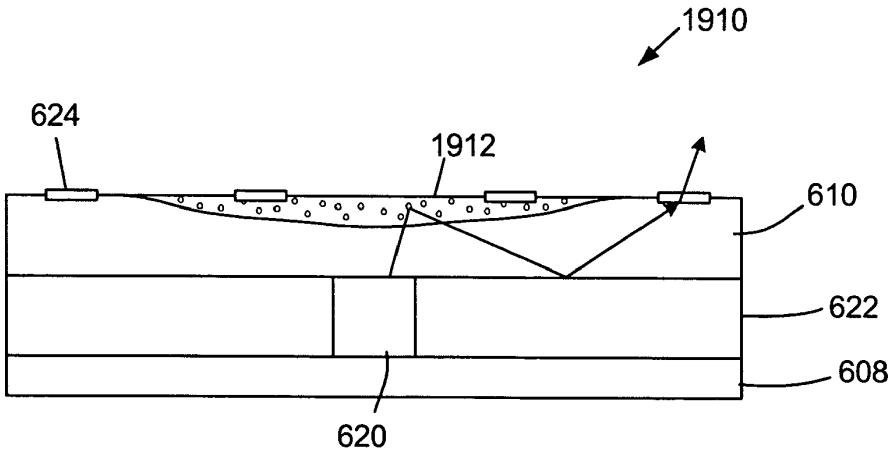

FIG. 19B

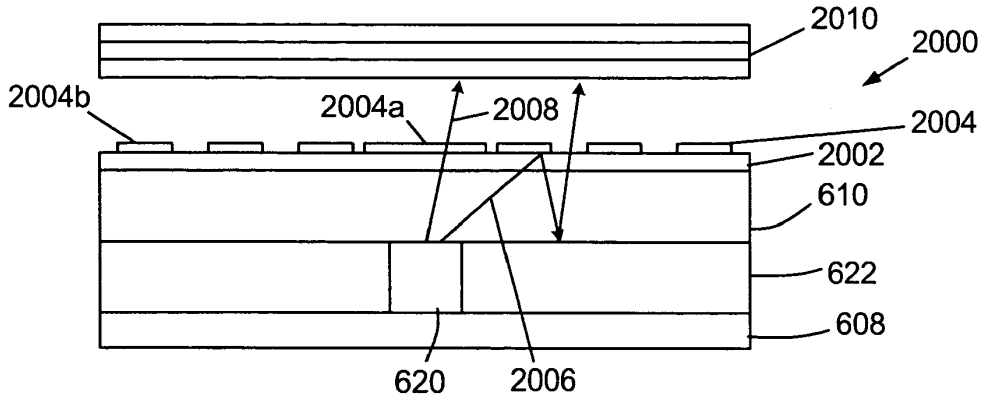

FIG. 20A

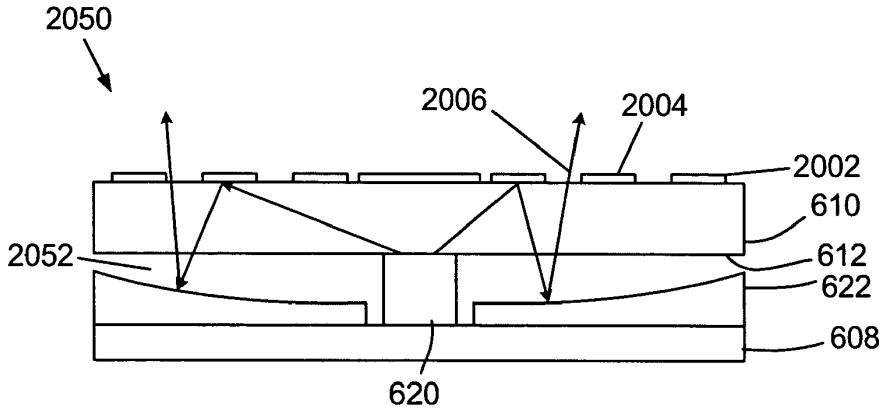

FIG. 20B

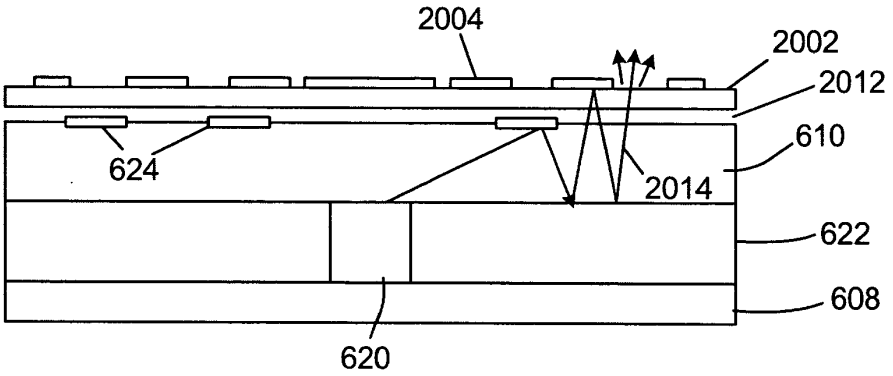

FIG. 20C

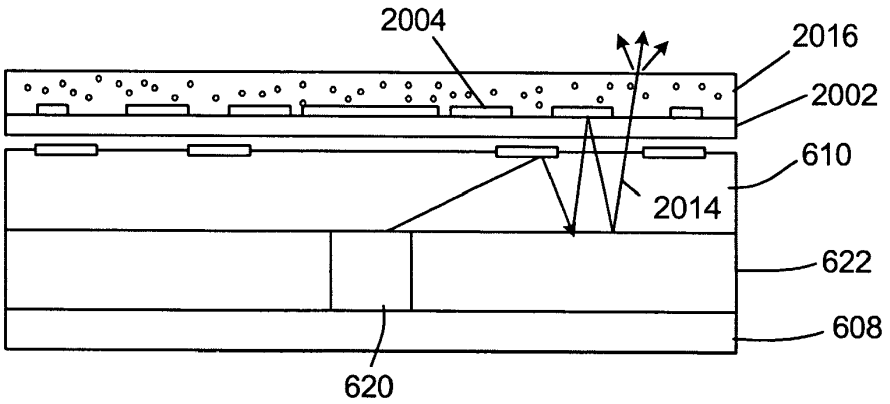

FIG. 20D

LED ARRAY SYSTEMS

FIELD OF THE INVENTION

[0001] The invention relates to lighting or display assemblies, and more particularly relates to lighting or display assemblies that use arrays of light emitting diodes (LEDS).

BACKGROUND

[0002] LED arrays are typically formed using LEDs that have a polymer encapsulant formed over an LED die and an associated reflector cup. The LED die itself has a quasi-Lambertian emission pattern and much of the light generated within the LED die is trapped due to total internal reflection at the die surface or emitted from the edge. The polymer encapsulant is shaped to extract more light and to focus the extracted light into a preferred emission profile. The reflector cup captures edge-emitted light and bends it forwards. The array, commonly formed as a tile, may also have side reflectors. The total effect of the reflectors and the encapsulant controls the optical profile of the LED pixel in the array.

[0003] Traditionally, the manufacture of a LED array thus includes steps for encapsulating the LED die within an encapsulated package, and then locating and placing the encapsulated package within the array. The optics of the array derive from the package and additional features formed on the array tile. A display, or illumination system, so constructed, consists of point sources of light that knit together visually from a long observation distance. However, the point sources of light break apart visually at shorter distances. Manufacturing is inherently inefficient due to the separate packaging and array population steps and the optics suffer due to the nature of the point source within an extended array. Furthermore, the resulting array tile is relatively thick and bulky.

SUMMARY OF THE INVENTION

[0004] The invention described herein is particularly useful for the manufacture and use of LED arrays that are used for lighting purposes or for information display.

[0005] According to one embodiment of the invention, an optical assembly for emitting light comprises an array of light emitting diodes (LEDs) mounted to a substrate. The LEDs emit light in a direction generally perpendicular to the substrate. An optical sheet is disposed over the LEDs. At least a portion of light entering one side of the optical sheet from the LEDs is guided within the optical sheet in a direction generally parallel to the substrate.

[0006] Another embodiment of the invention is directed to a light emitting system having a plurality of individually illuminated light emitting elements. The system comprises an array of light emitting diodes (LEDs), different LEDs corresponding to respective light emitting elements of the light emitting system. A light spreader sheet is disposed over the LEDs. Light entering the light spreader sheet from the LEDs is spread transversely within the spreader sheet over an area corresponding to the respective light emitting elements of the light emitting system. The light spreader sheet comprises light directing features that direct the spread light out of the spreader sheet.

[0007] Another embodiment of the invention is directed to a light emitting system having a plurality of individually illuminated light emitting elements. The system comprises an array of LEDs emitting light generally in a light emission direction, light spreading means for laterally spreading light in a direction across the array of the LEDs, and light directing means for directing light from the light spreading means in a desired illumination direction.

[0008] Another embodiment of the invention is directed to an assembly for emitting light. The assembly comprises an array of LEDs arranged on a substrate to emit light generally in a light emission direction. An array of reflectors is disposed with the LEDs. The reflectors define individual portions of a reflector sheet. The reflectors have respective apertures and respective LED of the array of LEDs protrude through the respective apertures. The substrate is positioned to a first side of the reflector sheet, and light emitting surfaces of the LEDs are being positioned to a second, reflecting side of the reflector sheet. A screen layer is disposed on the second side of the reflector sheet, at least some of the light from the LEDs being directed by the screen layer after reflecting off the reflectors.

[0009] The above summary of the present invention is not intended to describe each illustrated embodiment or every implementation of the present invention. The figures and the detailed description which follow more particularly exemplify these embodiments.

BRIEF DESCRIPTION OF THE DRAWINGS

[0010] The invention may be more completely understood in consideration of the following detailed description of various embodiments of the invention in connection with the accompanying drawings, in which:

[0011] **FIG. 1** schematically illustrates a lighting unit according to an embodiment of the present invention;

[0012] **FIG. 2** schematically illustrates an illuminated panel of the lighting unit of **FIG. 1**;

[0013] **FIGS. 3A-3C** show details of an illuminated panel according to an embodiment of the present invention in increasing detail;

[0014] **FIG. 4A** schematically illustrates an exploded view of an embodiment of a lighting panel according to principles of the present invention;

[0015] **FIGS. 4B-4F** schematically illustrate exploded views of other embodiments of lighting panels according to principles of the present invention;

[0016] **FIGS. 5A-5D** show schematic cross-sections through different embodiments of light emitting elements of a lighting unit according to principles of the present invention;

[0017] **FIG. 6** schematically illustrates a cross-section through a light emitting element of a lighting unit, where an embodiment of a light extraction element includes prismatic elements on a guiding layer, according to principles of the present invention;

[0018] **FIG. 7** schematically illustrates a cross-section through a light emitting element of a lighting unit, where another embodiment of a light extraction element includes prismatic elements on a guiding layer, according to principles of the present invention;

[0019] **FIG. 8** schematically illustrates a cross-section through a light emitting element of a lighting unit, where another embodiment of a light extraction element includes prismatic elements on a guiding layer, according to principles of the present invention;

[0020] **FIG. 9** schematically illustrates a cross-section through a light emitting element of a lighting unit, where another embodiment of a light extraction element includes indentations on a guiding layer, according to principles of the present invention;

[0021] **FIG. 10A** schematically illustrates a cross-section through a light emitting element of a lighting unit, where another embodiment of a light extraction element includes prismatic elements on a guiding layer, according to principles of the present invention;

[0022] **FIG. 10B** schematically illustrates an embodiment of a light emitting element like that illustrated in **FIG. 10A** along with a screen layer, according to principles of the present invention;

[0023] **FIGS. 11 and 12** schematically illustrate embodiments of a light emitting element that incorporates light management films, according to principles of the present invention;

[0024] **FIG. 13** schematically illustrates an embodiment of a light emitting element having a guiding layer with an upper surface that is non-parallel to the substrate, according to principles of the present invention;

[0025] **FIG. 14A** schematically illustrates an embodiment of a light emitting element having a guiding layer with a lower surface that is non-parallel to the substrate, according to principles of the present invention;

[0026] **FIGS. 14B and 14C** schematically illustrate structures that may be used on the lower surface of the guiding layer of the light emitting element in **FIG. 14A**, according to principles of the present invention;

[0027] **FIGS. 15A and 15B** schematically illustrate cross-sections through a light emitting element of a lighting unit, where other embodiments of a light extraction element include structure on a layer below the light guiding layer, according to principles of the present invention;

[0028] FIGS. **16**A-D schematically illustrate embodiments of patterns that may be used for the light extraction elements in a light emitting element, according to principles of the present invention;

[0029] FIGS. **17**A-D schematically illustrate embodiments of light emitting elements that have optical barriers between adjacent light emitting elements, according to principles of the present invention;

[0030] **FIGS. 18A and 18B** schematically illustrate cross-sections through reflective light emitting elements according to principles of the present invention; and

[0031] **FIGS. 19A and 19B** schematically illustrate cross-sections through embodiments of light emitting elements having diffuser associated with the guiding layer, according to principles of the present invention; and

[0032] **FIGS. 20A-20D** schematically illustrate cross-sections through embodiments of light emitting elements having a layer of diffusely reflecting material on the viewing side of the guiding layer, according to principles of the present invention.

[0033] While the invention is amenable to various modifications and alternative forms, specifics thereof have been shown by way of example in the drawings and will be described in detail. It should be understood, however, that the intention is not to limit the invention to the particular embodiments described. On the contrary, the intention is to cover all modifications, equivalents, and alternatives falling within the spirit and scope of the invention as defined by the appended claims.

DETAILED DESCRIPTION

[0034] The present invention is applicable to lighting units, and is more particularly applicable to lighting units that provide illumination using light emitting diodes (LEDs). The lighting units may provide light for illuminating an area or may provide information to a viewer by selective illumination of different areas of the lighting unit, as in an information display.

[0035] An example of an addressable lighting unit **100** that uses LEDs is schematically illustrated in **FIG. 1**. A power supply **102** supplies electrical power to the display panel **104**. The display panel **104** comprises an array of individually addressable light emitting elements. The power supply **102**, or control circuits within the panel **104**, selectively provides current to individual light emitting elements so as to illuminate a desired pattern on the display panel **104**.

[0036] Part of the display panel **104** is shown in **FIG. 2**. As the viewer moves closer to the display panel **104**, the individuality of the light emitting elements **106** becomes more apparent. If the viewer moves sufficiently close to the panel **104**, it becomes easier for the viewer to perceive the individual light emitting elements of the display panel, and more difficult to perceive the message being displayed on the panel. For example, the individual elements **106** form a "T" shape, but the "T" is not as easily discerned as the view of the "T" from further away.

[0037] Part of the reason for this problem is that the individual light emitting elements **106** on the display are separated from each other by a significant black border and so, at close distances, it becomes easier for the viewer to see the light emitting elements as separate elements, rather than part of a pattern. For comparison, the display of the letter "T" in the panel **200** demonstrates the enhancement in the readability of information where the extent of the dark space separating adjacent light emitting elements **206** is reduced.

[0038] In another embodiment, the lighting unit **100** may simply illuminate all the lighting emitting elements so as to provide as much light as possible. Such a lighting unit may be used for lighting purposes, rather than for information display.

[0039] An embodiment of the structure of the lighting unit **300** is further explained with reference to **FIGS. 3A-3B**. The display panel **302** of the lighting unit **300** comprises a number of tiles **304**, and each tile **304** comprises a number of light emitting elements **306**. The layers of the tile **306** comprise a substrate **308**, a guiding layer **310** and an optional contrast/projection filter **312**.

[0040] The contrast/projection filter **312** is used to i) reduce the amount of reflected ambient light and/or ii) provide viewing angle so as to operate as a projection screen. The selection of ambient light reduction and viewing angle depends on the particular application of the lighting unit, whether there is significant ambient light that needs to be rejected or whether it is desirable to spread the light from the lighting unit over a wide angle. For example, where the lighting unit is used in outdoor information display applications, it may be desirable to include both ambient light reduction, in order to improve the contrast under direct sunlight, while also providing a wide viewing angle so as to increase the area in which a viewer can see the information. In another example, where the lighting unit is used indoors, there may be no need to include ambient light rejection.

[0041] Where the contrast/projection filter **312** reduces the reflection of ambient light, the contrast/projection filter may include anti-reflection properties, for example an anti-reflection layer, to reduce the amount of reflection of the ambient light. The filter **312** may also, or alternatively, include anti-glare properties that reduce the specular reflection of the ambient light, for example a matte surface. Another approach to reducing the amount of reflected ambient light is to absorb the ambient light. Where the filter **312** provides viewing angle, the filter may include one or more layers that operate as a projection screen, for example a lenticular projection screen, or a beaded screen. Some lenticular and beaded screens provide both ambient light reduction and viewing angle. One example of such a screen, illustrated in **FIGS. 3B and 3C**, is a Vikuiti™ XRVS type screen available from 3M Company, St. Paul, Minn. The XRVS screen provides viewing angle by refracting the light through transparent spheres embedded in a layer of absorbing material: the transparent spheres provide a low loss path for the light to pass through the screen while the absorbing material absorbs the incident ambient light. Other types of filters may be included in the contrast/projection filter, for example a polarizer layer, such as a reflective polarizer or an absorbing polarizer, that transmits light in a desired polarization state. Other types of filter that may be incorporated include a Vikuiti™ Circular Polarizer (CP) layer, or a Vikuiti™ Light Control Film layer that provides privacy from off-axis viewing and/or provides reduction in the amount of ambient light that is reflected from the display. Both Vikuiti™ layers are available from 3M Company.

[0042] At the level of an individual light emitting element **306**, one or more LEDs **320** are disposed on the substrate **308**. If only a single color needs to be emitted from the light emitting element **306**, then only a single LED may be used, or more than one LED of the same type may be used to augment the optical power emitted by the light emitting element **306**. Different LEDs may be used to produce the different colors where the color of light emitted from the light emitting element is selectable. Individual control of the different LEDs leads to the ability to control the color of the emitted light. In addition, if it is desired that the light emitting element **306** emit white light, then the light emitting element **306** may be provided with a number of LEDs emitting light of different colors, whose combined effect is to emit light perceived by a viewer to be white. Another approach to producing white light is to use one or more LEDs **320** that emit light at a relatively short wavelength and to convert the emitted light to white light using a phosphor wavelength converter. White light is light that stimulates the red, green, and blue sensors in the human eye to yield an appearance that an ordinary observer would consider "white". Such white light may be biased to the red (commonly referred to as warm white light) or to the blue (commonly referred to as cool white light). Such light can have a color rendering index of up to 100.

[0043] The term LED is used to refer to different forms of inorganic semiconductor light emitting diode formed, for example, from a combination of one or more Group III elements and of one or more Group V elements (III-V semiconductor). Examples of III-V semiconductor materials that might be used in an LED include nitrides, such as gallium nitride or indium gallium nitride, and phosphides, such as indium gallium phosphide. Other types of III-V materials may also be used, as might inorganic materials from other groups of the periodic table.

[0044] The LEDs may be packaged LEDs or non-packaged LEDs, for example, LED dies, surface-mounted LEDs, chip-on-board LEDs and LEDs of other configurations. The term LED also includes LEDs packaged or associated with a phosphor where the phosphor is used to convert light emitted from the LED to light at a different wavelength. Chip-on-board (COB) is a hybrid technology that employs face-up-bonded chip devices interconnected to a substrate conventionally, for example using wire bonding. Connections may be made by wire bonding, tape automated bonding (TAB), or flip-chip bonding. The examples illustrated herein mostly show LED dies, but this is not intended as a limitation, and other types of packaged LED, as described in this paragraph, may also be used.

[0045] A reflective layer, **322** may be provided on the substrate **308** to direct light emitted from the LED **320** towards the viewer. Also, the guiding layer **310** may include a number of light extraction features **324** for extracting light from the film and directing the light towards the viewer, through the optional screen layer **312**. The light extraction features **324** may be arranged in a radial pattern on the guiding layer **310**, centered on or about the LED **320**. The optical path followed by light emitted from the LED **320** may include reflection within the guiding layer **310** before being directed to the viewer. The tile structure may be eliminated if the manufacturing processes permit the manufacture of sufficiently large substrate, lens films and screen layers.

[0046] A partial exploded view of a lighting unit **400** is schematically presented in **FIG. 4A**. The lighting unit **400** comprises a substrate **408** on which are arrayed a number of LEDs **420**. The substrate **408** may be formed from any suitable type of material. For example, the substrate **408** may be formed from a metal, a ceramic or a polymer. One particular example of a polymer substrate is polyimide, such as Kapton-brand polyimide manufactured by Du Pont, Wilmington, Del. The substrate **408** may be flexible or may be rigid. The substrate **408** may also be formed from a transparent material, such as polycarbonate, for example as manufactured by GE Plastics, Pittsfield, Mass.

[0047] An intermediate layer **422** may be introduced between the substrate **408** and the guiding layer **410**. The guiding layer **410** is typically transparent to the light emitted by the LED **420** and may be formed, for example, from a transparent polymer, such as a polycarbonate, a polyester, a

urethane, an acrylate or the like. This list of polymer materials is not intended to be an exhaustive list of suitable polymer materials.

[0048] The guiding layer **410** may include an array of light extraction elements **424** associated with each LED **420**. The intermediate layer **422** includes apertures **423**, also referred to as vias, that are registered to the LEDs **420** disposed on the substrate **408**. The intermediate layer **422** may be reflective for light at the wavelength emitted by the LED **420**. The intermediate layer **422** may comprise, for example, a multi-layer polymer reflective film such as Vikuiti™ ESR film available from 3M Company, St. Paul, Minn. The intermediate layer **422** may also be a white diffuse reflector such as a matrix containing diffusely reflecting particles, for example titanium dioxide particles. It will be appreciated that the intermediate layer **422** may also include some other type of reflector, such as a metalized layer or multilayer dielectric coating. The intermediate layer **422** may be bonded to the substrate **408**, for example using a pressure sensitive adhesive. Apertures may be formed in the intermediate layer **422** using, for example, laser milling.

[0049] In another embodiment, the intermediate layer **422** may be non-reflecting. This is particularly useful where the lighting unit is used in applications with high amounts of ambient light. The non-reflecting intermediate layer **422** may be formed from a polymer layer that includes an absorbing species, such as carbon particles, distributed within the polymer matrix. The non-reflecting intermediate layer helps to increase the viewability of the light emitted from the LEDs **420** by reducing the amount of ambient light reflected by the lighting unit.

[0050] Several different approaches are available for forming the guiding layer **410** over the LEDs **420**. One example is to laminate the guiding layer **410** over the LEDs **420** and/or the intermediate layer **422** as a sheet with pre-prepared light extraction elements. In another example, the guiding layer **410** may be formed by coating a polymer layer over the LEDs **420** and/or the intermediate layer **422** and by forming the light extraction elements in situ. Presentation of these two examples is not intended to present an exhaustive list of approaches to forming the guiding layer **410** over the LEDs **420**.

[0051] Conductors may be provided on different layers for carrying electrical current to and from the LEDs **420**. For example, conductors may be provided on any of the substrate **408**, the intermediate layer **422** and/or the guiding layer **410** to carry current to and from the LEDs **420**. The conductors may take the form of metallic traces, for example formed from copper. In the example illustrated in **FIG. 4A**, conductors **421**, are positioned on the substrate **408** to carry current to and/or from the LEDs **420**. The LED **420** is wire bonded to a conductor **425** on the substrate **408** via a wire bond **426**. The LED **420** may also be of the flip-chip variety, with both electrodes formed on its lower surface. Electrical connections may be made to electrical conductors using any suitable technique, such as solder reflow, or connection using a conductive epoxy such as Metech type 6144, available from Lord Corp., Cary, N.C.

[0052] The LED **420** may be electrically connected to conductors provided on other layers, as is now discussed with regard to **FIGS. 4B-4E**. **FIG. 4B** schematically illustrates an example where conductors **421** are provided on the substrate **408** and other conductors **431** are positioned on the lower surface of the intermediate layer **422**. **FIG. 4C** schematically illustrates an example where conductors **421** are provided on the substrate **408** and other conductors **441** are positioned on the upper surface of the intermediate layer **422**. **FIG. 4D** schematically illustrates an example, where conductors **421** are provided on the substrate **408** and other conductors **451** are positioned on the lower surface of the guiding layer **410**.

[0053] In another approach, schematically illustrated in **FIG. 4E**, the layer **460** may be provided with both conductors, **461** and **462**, which may be provided on different sides of the layer **460** or on the same side of the layer **460**. The layer **460** contains an aperture or recess **423** that accepts the LED (not shown). The layer **460** may be a substrate layer, for example, where the substrate is formed of a reflective material, or may be an intermediate layer, in which case a substrate layer (not shown) may be provided below the layer **460**. The conductor **461** may cover the opening of the aperture **423**, so as to make the aperture **423** a blind hole, which holds the LED in place in the aperture **423**.

[0054] The substrate **408** may be provided with a metallic layer on its lower surface (not shown) for extracting heat generated by the LEDs **420**. In addition, the conductors **421** may be provided with large area pads **421** a to aid in spreading the heat generated by the LEDs **420**. Generally, where the conductors **420** do not lie in the optical path between the LEDs **420** and the viewing space, the dimensions of the conductors **420** may be larger so as to aid in spreading the heat from the LEDs **420**. Where the conductors are positioned in the optical path, however, for example on the lower surface of the guiding layer **410** or on the upper surface of a reflective intermediate layer **422**, it is generally desirable to reduce the size of the conductors so as to reduce adverse effects on light passing to the viewing space.

[0055] The LEDs **420** may be arranged on the substrate **408** in a rectangular pattern, or square pattern, as illustrated. This leads to easy display of vertical and horizontal lines in an information display application. A rectangular or square pattern is not required, however, and the LEDs **420** may be laid out on the substrate **408** in some other pattern, for example in a hexagonal pattern. The actual shape of the light emitting element may be square, rectangular, round or some other shape. The interstices between light emitting elements, in other words those areas between light emitting elements where there is little or no light emitted, may be used as bonding surfaces, for example to fasten brightness enhancing films or projection filters.

[0056] Although only one LED **420** is associated with each light emitting element in **FIGS. 4A-4D**, there may be more than one LED **420** associated with each light emitting element. For example, the LED **420** may comprise a plurality of LEDs, such as LED dies **470** mounted close together and emitting different colors, as schematically illustrated in **FIG. 4F**. Such an arrangement permits not only the production of a mixed light color, such as white light, it also permits the user to control the shade of the color emitted by controlling the relative amounts of light emitted from each LED.

[0057] In the examples described below, the LEDs are illustrated in the form of chips (dies) that are directly mounted to the substrate. This is not intended as a limitation of the invention and other forms of LED may also be used.

[0058] A cross-section through one particular embodiment of a light emitting element **500** is schematically illustrated in **FIG. 5A**. In this embodiment, the LED **520** is bonded to the substrate **508**. The intermediate layer **522** has a height approximately the same as the LED **520** and the guiding layer **510** may be bonded to both the LED **520** and the intermediate layer **522**. Where there is a wire bond between the LED **520** and the substrate **508**, the wire bond **529** may pass between the LED **520** and the substrate in a separate via **528** through the intermediate layer **522**. The wire bond **529** may also pass within the same via **523** as the LED **520**.

[0059] While the light from the LED is emitted over a wide range of angles, the LED **520** is positioned to direct light generally upwards, in a direction away from the substrate **508**. An LED axis **520***a* is shown lying perpendicular to the substrate **508**: many LEDs emit light symmetrically about the LED axis **520***a*. Where the light is not emitted symmetrically about the LED axis, **520***a*, the LED axis corresponds to the average direction along which light is emitted from the LED **520**. The axis **520***a* need not represent the direction of maximum light intensity emitted by the LED **520**.

[0060] A cross-section through another embodiment is schematically illustrated in **FIG. 5B**. In this embodiment, the LED **520** is higher than the intermediate layer **522** and stand-offs **530** may be used to hold the guiding layer **510** above the intermediate layer **522**. The stand-offs **530** may hold the guiding layer **510** at a height that contacts the LED **520** or may hold the guiding layer **510** at a height out of contact with the LED **520**.

[0061] A cross-section through another embodiment is schematically illustrated in **FIG. 5C**. In this embodiment, the height of the intermediate layer **522** is less than the height of the LED **520**. Stand-offs **532** are provided between the intermediate layer **522** and the substrate **508**. The intermediate layer **522** may be bonded to the lower surface **511** of the guiding layer **510**.

[0062] The LED need not be square or rectangular in cross-section. For example, the LED **520** may have a different shape, as is schematically illustrated in **FIG. 5D**. Furthermore, the aperture in the intermediate layer **522** may be sized larger than the LED **520** so as to reduce the constraints on registration between the LEDs **520** and the intermediate layer **522** when assembling the lighting unit.

[0063] A cross-section through another embodiment is schematically illustrated in **FIG. 5E**, in which a portion of the LED **520** sits within a recess **550** in the guiding layer **510**. In this embodiment some of the light **552** that is emitted from the side of the LED **520** is directed into the guiding layer **510** and is guided along the guiding layer **510**. Light **554** that is emitted from the top of the LED **520** may also be guided along the guiding layer **510**.

[0064] Optical coupling between the LED **520** and the guiding layer **510** may be facilitated through the use of an optical coupling material **540** disposed between the LED **520** and the guiding layer **510**. The optical coupling material **540** may also provide adhesive properties that increase structural integrity.

[0065] The optical coupling material **540** may be applied in different ways during the assembly process. In one approach, the coupling material **540** is disposed on top of the LEDs **520** prior to application of the guiding layer **510**. The guiding layer **510** is then applied over the assembly of LEDs **520**. Such application typically displaces the coupling material **520** so as to spread into the vias **523** containing the LEDs **520** and also between the intermediate layer **522** and the guiding layer **510**. In another approach, the guiding layer **510** is applied over the LEDs **520**, and then the coupling material **540** is permitted to wick in between the guiding layer **510** and the intermediate layer **522** and LEDs **520** through capillary action. In this approach, the coupling material may also fill, or partially fill, the vias **523** containing the LEDs **520**. One example of the optical coupling material **540** is Norland type NOA **81** optical adhesive, supplied by Norland Products, Cranbury, N.J.

[0066] Different approaches to distributing the light from the LED are now described with reference to **FIGS. 6-18**. In many of these approaches, some of the light from the LED is reflected within the guiding layer **510**, at either the lower surface or the upper surface, or both, and so the guiding layer **510** may be said to guide the light from the LED. Laterally guiding the light away from the LED, also referred to as spreading the light, before directing the light to the viewer may help to reduce the amount of dark space between adjacent light emitting elements of the lighting unit. It will be appreciated that not all the light emitted by the LED **520** need be guided within the guiding layer **510**.

[0067] In **FIG. 6**, an LED **620** is disposed on a substrate **608** and is surrounded by an intermediate layer **622**, which may be a reflecting film. A guiding layer **610** lies over the LED **620**. Light from the LED **620** passes into the guiding layer **610**. The side of the guiding layer **610** facing away from the LED is provided with a light extraction feature **624**. In this particular embodiment, the light extraction feature **624** includes prismatic structures **626** disposed about the LED **620**. The prismatic structures **626** may be formed as a Fresnel lens with the LED **620** at its center. Light **630** from the LED **620** passes into the guiding layer **610**. Some of the light **632** may be emitted directly via the prismatic structure **626**. Other portions of the light **634** may be reflected within the guiding layer **610**, for example by reflection off the upper surface **611** of the guiding layer **610**. The light **634** may also reflect off the lower surface **612** of the guiding layer **610** or off the intermediate layer **622**. The light **634** is directed in a forwards direction towards the viewer by the prismatic structures **626**.

[0068] In this and the following embodiments, the light may be reflected back into the guiding layer **610** by the intermediate layer **622**, or may be internally reflected and/or refracted at the lower surface **612** of the guiding layer **610**. Where the light is internally reflected at the lower surface **612**, light extraction features may also be provided on the lower surface **612**. Where the light is reflected by the intermediate layer **622**, then light extraction features may also be provided on the intermediate layer **622** and/or on the lower surface **612**.

[0069] In the embodiment schematically illustrated in **FIG. 7**, the light extraction features **624** may comprise areas that include diffractive structures or diffusely reflecting material **636** provided on the upper surface **611** of the guiding layer **610**. Light **630** is guided within the guiding layer **610**. However, after diffraction or diffuse reflection off the diffractive structures or diffusely reflecting material **636**,

the light **630** is directed to the intermediate layer **622**, which reflects the light back through the guiding layer **610** towards the viewer. The density of the diffractive structures or diffusely reflecting material **636** on the surface **611** of the guiding layer **610** may be selected so as to direct light to the intermediate layer **622** while also permitting light to pass through the upper surface **612** towards the viewer.

[**0070**] In the embodiment schematically illustrated in **FIG. 8**, the light extraction features **624** comprise extraction grooves **646** that penetrate the upper surface **611** of the guiding layer **610**. The extraction grooves **646** help to direct light from the upper surface **611** to the intermediate layer **622** which reflects the light back through the guiding layer **610** to the viewer.

[**0071**] In the embodiment schematically illustrated in **FIG. 9**, the light extraction features comprise indentations **648** that penetrate the upper surface **611** of the guiding layer. The indentations **648** may direct light from the upper surface to the intermediate layer **622** at an angle that permits the light reflected from the intermediate layer **622** to be transmitted through the upper surface **611** of the guiding layer. The indentations **648** may also permit light incident thereon to directly pass out of the guiding layer **610**. The indentations **648** and grooves **646**, shown in **FIG. 8**, may be implemented on the guiding layer **610** in any pattern for extracting the light from the guiding layer to produce a desired illumination profile.

[**0072**] In the embodiment schematically shown in **FIG. 10A**, the light extraction feature **624** comprises a layer of optical coupling material **650** and a plurality of prism-type structures **652** whose apexes penetrate into the optical coupling material **650**. The prism-type structure **652** may be attached to a base layer **654**. For example, the prism-type structures **652** may be molded with the base layer **654** or may be bonded to the base layer **654**. The optical coupling material **650** may be, for example, a thin layer of adhesive with a thickness in the range 1-20 μm. In this particular embodiment, the light **630** may pass out of the guiding layer **610** to be totally internally reflected at the upper surface **651** of the coupling material **650**. The light **630** is directed to the intermediate layer **622** which reflects the light back upwards. Some of the light incident on the upper surface **612** of the guiding layer **612** is coupled into the prism-type structures **652**, which reflect the light upwards in the general direction of the viewer. The base layer **654** may be provided with a surface or volume diffuser to diffuse the light **656** emitted from the base layer **654**. The prism-type structures **652** may be shaped in a pattern centered around the LED **620**, or may be provided in some other pattern. For example, the prism-type structures may be linear.

[**0073**] In a variation of the embodiment illustrated in **FIG. 10A**, a contrast/projection filter **658** may be provided close to the output side of the base layer, for example as is illustrated in **FIG. 10B**.

[**0074**] One or more light management films may be used above the guiding layer for directing or redirecting the light. For example, one or more brightness enhancing films, available from 3M Company, St. Paul, Minn., under the trade name BEF™, may be used to direct the light more in a direction perpendicular to the substrate **608**. Brightness enhancing films typically comprise a plurality of prismatic refractive elements which, when illuminated from the base side of the prismatic elements, refract the transmitted light in a direction more parallel to the axis. In the example illustrated in **FIG. 11**, a light emitting element that uses a diffractive light extraction element **636** emits light from the guiding layer **610** in a first direction relative to the axis **660**. The light **667** is refracted upon exiting the first brightness-enhancing layer **662** in a second direction that is closer to the axis **666** than the first direction. In some embodiments, only one layer of brightness enhancing film **662** is used. Typically, the prisms of the first brightness enhancing film are ribbed, and so a single layer of brightness enhancing film redirects the light in only one dimension. A second additional layer of brightness enhancing film **664** may optionally be used, where the ribbed prisms of the second layer of brightness enhancing film **664** are oriented perpendicular to those of the first layer **662**: the combination of the two layers **662** and **664** of brightness enhancing film redirects the light towards the axis **666** in two dimensions.

[**0075**] A contrast/projection filter **668** may be provided at the output from the light management films **662** and **664**, for example as is schematically illustrated in **FIG. 12**. For certain applications, a reflective polarizing layer may be provided above the light emitting element, for example a multilayer optical film (MOF) reflective polarizer such as Vikuiti™ DBEF film supplied by 3M Company, St. Paul, Minn. A reflective polarizer transmits light in one polarization state and reflects the light in the orthogonal polarization state: such a polarizer may be used when the light emitting element is used to provide polarized light, e.g. for backlighting an LCD display. The light in the polarization state that is reflected by the reflective polarizer is reflected back towards the substrate **608**. One of the layers, for example the intermediate layer **622** may be treated to reflect the light reflected by the reflective polarizer in a manner that causes some depolarization, so that the light reflected by the reflective polarizer may be recycled and eventually passed through the reflective polarizer.

[**0076**] The guiding layer **610** need not have parallel surfaces. In other words, the surfaces **611** and **612** may be nonparallel to each other. One such embodiment is schematically illustrated in **FIG. 13**, in which the light extraction feature is an upper surface **611** that lies non-parallel to the lower surface **612** and to the substrate **608**. The light **630** internally reflects at the upper surface **611** and is directed to the lower surface **612**, and is reflected by the lower surface or the intermediate layer **622** as light **670**. However, since the upper surface **611** is not parallel with the lower surface **612**, the reflected light **670** is not incident on the upper surface **611** at the same angle of incidence as the light **630** from the LED. Where the reflected light **670** is incident on the upper surface **611** at an angle of incidence less than the critical angle, the reflected light **670** is transmitted through the upper surface **611** as light **672**. Another layer (not shown), such as BEF™, or the like, may be used to direct the light **672** in a direction more perpendicular to the substrate **608**.

[**0077**] The guiding layer **610** may be provided with a component **674** for directing the light from the LED **620** along the film **610**, thus increasing the amount of the light that is guided by the guiding layer **610**. In the illustrated embodiment, the component **674** includes a recess positioned above the LED **620**. Light **676** from the LED **620** is internally reflected at the recess surface and is directed along

the film **610**. Where the angle of incidence on the recess surface is sufficiently high, the light is totally internally reflected. The light **676** may be directed out of the film **610** after reflection off the oblique upper surface **611**. The component **674** may also be used in other embodiments of a light emitting element discussed herein, where the guiding layer **610** has surfaces parallel to the substrate **608**.

[**0078**] Another embodiment in which the surfaces of the guiding layer are not parallel is schematically illustrated in **FIG. 14A**. In this embodiment, the upper surface **611** is parallel to the substrate **608**, but the lower surface **612** is not parallel to the substrate **608**. The light extraction feature includes, in this case, the lower surface **612**. The light **630** is internally reflected by the upper surface **611** of the guiding layer **610** and directed to the lower surface **612**. The light is directed back towards the upper surface **611** from the lower surface **612**. When the light from the lower surface **612** is incident on the upper surface **611** at an angle of incidence that is less than the critical angle, the light **680** is transmitted through the upper surface **611**.

[**0079**] Different types of reflector may be used on the lower surface **612**. For example, the lower surface **612** may be coated with a reflecting film. Other approaches include providing structure on the lower surface **612**. For example, the lower surface **612** may be provided with one or more steps **682**, as is schematically illustrated in **FIG. 14B**. The steps **682** are set at a desired angle so as to totally internally reflect some of the incident light **686**. In another approach, the lower surface **612** may be provided with a series of elements **684**, for example, prismatic elements that redirect the incident light **686** through a combination of refraction and total internal reflection. Light that is transmitted through the lower surface **612** of the guiding layer **610** may be reflected back through the guiding layer **610** by the intermediate layer **622**.

[**0080**] The extraction feature does not have to be situated on the upper surface of the guiding layer **610**, but may be provided on the lower surface of the guiding layer **610** and/or on the intermediate layer **622**. One example of such an arrangement is schematically illustrated in **FIG. 15A**, in which a reflective intermediate layer **622** is provided with a non-planar surface structure **690**. Some of the light **692** is guided by the guiding layer **610** to be incident on the surface structure **690**. Some of the light reflected from the surface structure **690** is directed to the upper surface **611** of the guiding layer **610**, and out towards the viewer. The surface structure **694** may be introduced to the intermediate layer **622** using a number of different techniques. Some approaches to forming a structure on a polymer reflector as may be used in the intermediate layer **622** are described in U.S. Pat. Nos. 6,045,894 and 6,096,247, the relevant portions of which are incorporated herein by reference.

[**0081**] Another example is schematically illustrated in **FIG. 15B**, in which the upper surface of the reflective intermediate layer **622**, and/or the lower surface of the guiding layer **610**, is provided with patches **695** of diffusely reflective light extraction material, such as a white pigmented material. At least some of the light incident on the patches **695** is not specularly reflected, but is diffusely reflected, which allows some of the light **697** to be directed out of the guiding layer **610**. Other types of light extraction features may be provided on the upper surface of the intermediate layer **622** or on the lower surface of the guiding layer **610**, and may also be provide in combination with light extraction features on the top surface of the guiding layer **610**.

[**0082**] The light extraction features described herein have been illustrated in examples that contain only one type of extraction feature. It will be appreciated that the different types of light extraction features illustrated herein may be used alone, or in combination with other types of light extraction features.

[**0083**] A significant fraction of the light produced by the LED **620** propagates in a direction that might pass directly through the guiding layer **610**, which may lead to a viewer perceiving a central bright spot in the light emitting element. Other approaches may be used to spreading the light transversely, in addition to using a guiding layer. One such approach has been discussed above with regard to component **674**, illustrated in **FIG. 13**, in which the light is internally reflected at recess surfaces and thus directed generally along the plane of the guiding layer **610**. After lateral spreading, the light is then extracted from the guiding layer.

[**0084**] Another approach to spreading the light from the LED **620** within the guiding layer **610** is now discussed with reference to **FIG. 19A**. A diffuser **1902**, such as a volume diffuser, is positioned on the far side of the guiding layer **610** from the LED **620**. Where the diffuser **1902** is a volume diffuser, the volume diffuser may be located within the guiding layer **610**. The diffuser **1902** is used to reduce the amount of light that passes directly through the guiding layer **610** from the LED, and thus to uniformize the output from the light emitting element. The diffuser **1902** spreads some of the light **1904** laterally so that it can be extracted from the guiding layer at some other position via an extraction feature **624**.

[**0085**] The diffusion power of the diffuser **1902** may be spatially tailored so as to enhance the desired profile of light emitted from the light emitting element. For example, where it is desired to reduce the amount of light emitted above the LED **620**, and to spread the light around the light emitting element, the diffusing power of the diffuser **1902** is greatest above the LED **620**. In the illustrated embodiment, the diffuser **1902** is thickest above the LED **620** and the diffuser thickness **1902** tails off towards the edge of the light emitting element **1900**. The diffusing power of the diffuser **1902** may also be adjusted by spatially varying the density of diffusing particles in the volume diffuser. In the illustrated embodiment, the thickness of the diffuser **1902** varies linearly from the center of the light emitting element **1900**.

[**0086**] In another embodiment, schematically illustrated in **FIG. 19B**, the thickness of the diffuser **1912** varies nonlinearly with position across the light emitting element **1910**. Furthermore, the diffuser **1912** may or may not extend over the entire area of the light emitting element **1910**. In the illustrated embodiment, the diffuser **1912** is does not extend over the entire light emitting element **1910**.

[**0087**] The light flux close to the LED tends to be high, with the result that the level of light emitted close to the LED can be significantly higher than from points further away from the LED. An example, of such an emitted intensity profile is schematically shown as curve (a) in **FIG. 16A**.

[0088] In order to obtain a more uniform intensity profile in the light emitted from the light emitting element, the light extraction features may be placed or adapted to extract less light at a position close to the LED itself, and to increase the amount of light extraction from the positions of the light extracting element further away from the LED. This is illustrated further with reference to **FIG. 16A**, which schematically illustrates a light emitting element **1600**, showing the position of the LED **1620** at the center of the light emitting element **1600** and the light extraction features **1624** arranged radially around the LED **1620**. In the illustrated embodiment, the density of the light extraction features increases with radial separation from the LED **1620**. Appropriate selection of the light extraction density may lead to a more uniform emission intensity profile over the light emitting area, for example as illustrated as curve (b) (dashed lines). In addition, the extraction strength of the extraction features may be varied with increased distance from the LED **1620**, so as to reduce the non-uniformity in light extraction over the light emitting element **1600**. The extraction strength may be adjusted by varying, for example, the size of the extraction feature.

[0089] All types of extraction features may be arranged in a manner that controls the intensity profile of light emitted from the light emitting element, including upper surface and lower surface extraction features, such as prismatic structures formed on the upper surface, diffracting structures, extraction grooves, prismatic structures penetrating into the upper surface and non-parallel surfaces on the guiding film. In addition, a combination of different types of extraction features may be used, such as a surface structure on the guiding film along with non-parallel surfaces. The extraction features may be arranged to provide a relatively uniform profile illumination profile or some other desirable profile. The term "uniform" refers to a relatively flat illumination profile where the area above the LED is not significantly brighter than the surrounding area.

[0090] The light extraction features need not be arranged with radial symmetry around the LED, but may be arranged in some other shape. One example of such a shape is schematically illustrated in **FIG. 16B**, which shows the light extraction features **1624** arranged in an approximately square pattern around the LED **1620**.

[0091] Light extraction features need not be arranged continuously around the LED, but may be discontinuous. One example of discontinuous light extraction features **1634** is schematically illustrated in **FIG. 16C**, in which the discontinuous light extraction features **1624**, such as diffractive regions or diffusely reflective patches, are arranged in a pattern that partially maps to the pattern shown in **FIG. 16B**. Another example of a pattern of discontinuous light extraction features **1642** is schematically illustrated in **FIG. 16D**. It will be appreciated that many different types of patterns may be used, according to the desired light extraction profile.

[0092] One embodiment of light emitting element **2000** that uses a printed pattern of light extraction elements is schematically illustrated in **FIG. 20A**. A sheet **2002** is provided with an arrangement of diffusely reflecting areas **2004** on at least one surface. Where the sheet **2002** is brought sufficiently close to the guiding layer **610**, the light **2006** in the guiding layer **610** is coupled into the sheet **2002** and interacts with the diffusely reflecting areas **2004**. Thus, the diffusely reflecting areas **2004** may be used as light extraction features. In another embodiment, the diffusely reflecting areas may be provided directly on the upper surface **611** of the guiding layer **610**.

[0093] The diffusely reflecting areas **2004** may comprise, for example, a white pigment that is printed as an arrangement of dots on the sheet **2002**. The diffusely reflecting areas **2004** may be patterned, for example so as to reduce the amount of light **2008** transmitted directly from the LED **620** and to increase the lateral spreading of the light **2006** for extraction from the guiding layer at an increased distance from the LED **620**. The patterning may be made, for example, by varying the thickness of the diffusely reflecting material, by varying the surface density of diffusely reflecting areas provided on the surface **611**, by varying the density of the material that diffusely reflects, or some combination of these different approaches. In the illustrated example, the extent (surface density) of the diffusely reflecting area **2004***a* above the LED **620** is greater than the extent of the diffusely reflecting area **2004***b* close to the edge of the light emitting element **2000**, and so the amount of diffuse reflection at the upper side of the guiding layer is greater where direct illumination by the LED **620** is brighter than for other areas of the upper side of the guiding layer where direct illumination of the LED is less bright. The diffusely reflecting area may be somewhat translucent, in that some light may pass through, rather than being diffusely reflected. Light **2008** from the LED **620** is illustrated as passing through the diffusely reflecting area **2004***a*.

[0094] Various light management film layers **2010** may be used to affect the light once it has been directed out of the guiding layer **610**. For example, the layers **2010** may include a layer of a brightness enhancement film, crossed brightness enhancement film layers, a reflective polarizer film, or a combination thereof. The layers **2010** may also include other filters and screen layers.

[0095] **FIG. 20B** shows another example of a light emitting element **2050**, in which the diffusely reflecting areas **2004** are applied directly to the upper surface of the guiding layer **610**. Also, the light emitting element includes a gap **2052** between the lower surface **612** of the guiding layer **610** and the intermediate layer **622**. In this case, the intermediate layer **622** is reflective, so that light **2006** that is diffusely reflected through the lower surface **612** is reflected back up through the guiding layer. The reflected light **2006** may pass out of the guiding layer and through or between the diffusely reflecting areas **2004**.

[0096] The intermediate layer **622** may be flat and parallel, for example as shown in **FIG. 20A**, or may be curved, for example as shown in **FIG. 20B**. A curved, reflective intermediate layer may be formed by placing ESR film over a molded form. It will be appreciate that a gap and a curved intermediate layer may be present in the different embodiments of light emitting element illustrated above and below.

[0097] The sheet **2002** may also be used as a diffuser to help reduce the ability of a viewer to see the location of the LED **620** in the light. One example of such use is schematically illustrated in **FIG. 20C**. A gap **2012** separates the sheet **2002** from the guiding layer **620**, and light is directed out of the guiding layer via the use of light extraction features **624**. The light extraction features may be any type of light

extraction features discussed above. At least some of the light **2014** incident on the diffusely reflecting areas **2004** is diffusely reflected through the guiding layer **610** to the intermediate layer **622**. The light **2014** is reflected by the intermediate layer **622**, through the guiding layer **610** and the sheet **2002**. A diffuser **2016**, such as a bulk diffuser, may also be used to further diffuse the light **2014**, for example as is schematically illustrated in **FIG. 20D**.

[**0098**] The position and density of the diffusely reflecting areas **2004** may be adjusted so as to achieve a desired output illumination profile, regardless of whether the sheet **2002** is optically contacted to the guiding layer **610** or is separated from the guiding layer.

[**0099**] Light from one light emitting element may be permitted to pass to an adjacent light emitting element. However, in some applications such as information display, it may be desirable to prevent light from passing between adjacent light emitting elements. One approach to reduce such cross-talk between adjacent light emitting elements is to ensure that all of the light from an LED is coupled out of the guiding film before the light reaches the edge of the light emitting element.

[**0100**] Other approaches to reducing cross-talk between adjacent light emitting elements are now described with reference to **FIGS. 17A-17D**. In these figures, adjacent light emitting elements are separated by a dashed line **1702**. Each light emitting element comprises at least one LED **1720** disposed on a substrate **1708**, with an intermediate layer **1722** and a guiding layer **1710** over the intermediate layer. Light from the LEDs **1720** passes into the guiding layer **1710**. Diffractive light extraction elements **1724** are illustrated in each case, but other types of light extraction elements may be used.

[**0101**] In the approach schematically illustrated in **FIG. 17A**, a reflective barrier **1730** is disposed between adjacent light emitting elements. The reflective barrier **1730** may be formed using reflective material disposed in a groove in the guiding layer **1710**. The reflective material may comprise particles of a high refractive index material, such as titanium dioxide (TiO_2), barium sulphate ($BaSO_4$) or aluminum oxide (Al_2O_3), in a polymer matrix such as polyester (for example PEN or PET), polymethyl methacrylate, polycarbonate, polyurethane, cyclic polyolefin, or the like. The groove may be formed in the guiding layer when the guiding layer is manufactured, for example by compression molding, casting and curing, injection molding, or the like.

[**0102**] In the approach schematically illustrated in **FIG. 17B**, the reflective intermediate layer **1722** is provided with ribs **1740** that extend upwards. The guiding layer **1710** is formed over the intermediate layer **1722**, for example by one of the molding methods listed in the previous paragraph. The ribs **1740** act as reflective barriers between the adjacent light emitting elements.

[**0103**] The LEDs **1720** need not be positioned at the center of the light emitting element, as is now discussed with reference to **FIG. 17C**. For example, the LED **1720** in the left light emitting element **1750** is positioned to the side of the light emitting element **1750**, and may be placed close to the edge or corner of the light emitting element. The light extraction features **1724** are positioned and arranged to direct the light received in the light pattern that results from the off-center placement of the LED **1720**.

[**0104**] In addition, LEDs **1720** may be placed at more than one location within the light emitting element, as is illustrated for the light emitting element **1752** on the right hand side of the figure. In the illustrated embodiment, there are two LEDs, one on either side of the light emitting element **1752**. The light emitting element **1752** may include other numbers of LEDs **1720**. For example, where the light emitting element **1752** has four sides, the LEDs **1720** may be positioned along the four edges of the light emitting element **1752** or at the four corners of the light emitting element **1752**. The light extraction features **1724** are positioned and arranged in the light emitting element **1752** to direct the light received in the light pattern that results from the particular placement of the LEDs **1720**.

[**0105**] In another approach, schematically illustrated in **FIG. 17D**, the thickness of the guiding layer **1710** is reduced at the position **1760** between the two light emitting elements **1762** and **1764**. Such a reduction in guiding layer thickness results in a reduction, if not elimination, of light that passes from one light emitting element to an adjacent light emitting element within the guiding layer **1710**. The reduction in guiding layer thickness may be produced, for example, by embossing the guiding layer with a groove pattern, where the grooves lie between adjacent light emitting elements.

[**0106**] Another embodiment of light emitting element **1800** is schematically illustrated in **FIG. 18A**, which shows two light emitting elements side by side. In this embodiment, LEDs **1820** are disposed on a substrate **1808**. An optical sheet **1822** has apertures to accommodate the LEDs **1820**, so that LEDs **1820** penetrate through the apertures. Thus the substrate **1808** is on one side of the sheet **1822** and the light emitting portions of the LED **1820** at least have a clear path to emit light through the apertures, or may be through the apertures themselves, as illustrated.

[**0107**] The sheet **1822** is provided with a reflecting surface **1824** that reflects the light emitted by the diodes **1820**. The reflecting surface **1824** is curved so as to direct the light in a desired direction. For example, the reflecting surface may be paraboloidal, elliptical or have some other shape. The reflecting surface **1824** may be a metalized surface formed on a shaped film, or may be a multilayer reflector, for example a vacuum coated dielectric reflector or a multilayer polymer reflector. The reflecting surface **1824** may be deposited on the sheet **1822**. In another approach, the sheet **1822** itself may be formed of reflecting material, for example stamped out of ESR™ film available from 3M Company, St. Paul, Minn.

[**0108**] The LEDs **1820** may be flip-chip type LEDs, having both electrical contacts on the lower surface attached to the substrate **1808**, in which case the substrate **1808** may carry conductors for both the positive and negative contacts of the LEDs **1820**.

[**0109**] The space **1826** above the LED **1820** and reflecting surface **1824**, may be in air or may be filled with transparent material. For example, transparent material may be molded in place over the LED **1820** and reflecting surface **1824**. Further, a diffuser or screen film **1830** may be disposed above the sheet **1822** to diffuse the light after being reflected by the reflecting surfaces **1824**.

[**0110**] Another embodiment of light emitting element **1850** is schematically illustrated in **FIG. 18B**. In this

embodiment, lenses are included between the reflective surfaces **1824** and the diffuser or screen layer **1830**. In the illustrated embodiment, the lenses are formed on a lens sheet **1852** as prismatic lenses, for example Fresnel lenses. It will be appreciated, however, that other types of lenses may be used. For example, where the space **1826** is filled with transparent material, the lenses may be formed on the surface of the transparent material.

[0111] The different types of light emitting elements discussed herein may each be incorporated in a lighting unit used, for example, for information display or for space lighting. The constructions can be very compact since the LED dies are typically only around 300 μm thick and the guiding layer sits on top of the LED dies. Accordingly, the thickness of such a construction may be only about a millimeter or two. This leads to the possibility that the lighting unit may be flexible and may be formed in a non-planar shape. For example, the lighting unit may be wrapped around a form, such as a cylindrical form. The lighting unit may also be rigid.

[0112] While some of the embodiments of lighting unit were described above to include contrast/projection filters, it will be appreciated that all the different types of lighting unit may be provided with contrast/projection filters, if desired.

[0113] For a given lighting application, the brightness requirements, lamp pixel count and total lamp area are all considerations when determining the number of LEDs required. Examples of two different lighting applications are discussed below.

EXAMPLE 1

Ceiling Lighting

[0114] This example considers a lighting fixture having a diagonal of 70" (178 cm) and an aspect ratio of 5:1. The example considers the design of a fixture that provides light equivalent to 2 fluorescent tubes at 70 L/W and using 100 W input power, or 7000 Lumens.

[0115] The assumed LED characteristics are as shown in Table I. The characteristics are similar to those for a 1 mm square Luxeon white LED available from Lumileds Lighting LLC, San Jose, Calif.

[0116] The LEDs are assumed to be driven at ⅔ maximum rated power, hence the actual current is less than the maximum current. The calculated lighting unit design is summarized in Table 1.

TABLE I

LED Characteristics	
Wavelength band	White
Luminous efficacy (L/W)	25
Max. forward current (mA)	350
Max. power (W)	1.19
Power consumed (W)	0.80
Actual forward current (mA)	235
Forward voltage (V)	3.4
Light out (L)	20.0

[0117]

TABLE II

Lighting Unit Characteristics	
Lightguide extraction/absorption factor (%)	80
LED coupling to LG (%)	95
Net efficiency (%)	76
Vertical divergence (half max., full angle) (°)	60°
Horizontal divergence (half max., full angle) (°)	60°
Diagonal (cm)	178
Aspect ratio	5:1
Length (cm)	174
Width (cm)	35
Number of LEDs	350
LED density (cm^2 per LED)	17.4
Luminous efficiency (L/W)	25.00
Power total (W)	280
Total flux (Lumens)	7000
Divergence angle gain	1.07
Axial light (candela m^{-2})	3714

[0118] Thus, in this example, a sheet of light emitting elements, with each light emitting element having an area of no more than 17.4 cm^2, with a total area of 0.6 m^2, provides as much light as a pair of fluorescent tubes and associated luminaire optic that take up the same area. The screen is assumed to direct the light into a 60° cone, through the use of appropriate light management films and/or projection filters. The solid angle of the emitted light, together with the indicated absorption, results in an axial gain of 1.07 relative to a perfect Lambertian emitter.

EXAMPLE 2

RGB Backlight for a Liquid Crystal Display

[0119] In this example, the lighting unit is used as the backlight for a liquid crystal display (LCD) having a diagonal of 23". Each light emitting element includes four LED dies, one red, two green and one blue. Active control of the different LED dies permits for control of the backlight color. In the example design, the backlight has a color temperature of 6500 K.

TABLE III

LED Characteristics for Backlight

				Total
Number/color triad	1	2	1	4
Wavelength band	Red	Green	Blue	
Luminous efficacy (L/W)	40	23	5	18.81
Max. forward current (mA)	385	700	350	
Max. power (W)	1.14	2.39	1.2	4.73
Actual forward current (mA)	126	505	320	
Power consumed (W)	0.37	1.73	1.09	3.19
Forward voltage (V)	2.95	3.42	3.42	
Light out (L)	14.83	39.70	5.47	60
% of luminous content	24.7	66.2	9.1	
Color temperature (K)				6500

[0120] The lighting unit is assumed to use a single sheet of brightness enhancing film and to produce a horizontal viewing angle of 56° (half maximum, half angle) and a vertical viewing angle of 37° (half maximum, half angle). The total flux emitted from the backlight is about 1560 lumens, and the on-axis brightness is about 5191 candelas/m^2. The

calculated properties of the example backlight unit are listed in Table IV.

TABLE IV

RGB Backlight Characteristics	
Lightguide extraction/absorption factor (%)	80
LED coupling to LG (%)	95
Net efficiency (%)	76
Vertical divergence (half angle)(°)	37°
Horizontal divergence (half angle) (°)	56°
Diagonal (cm)	58
Aspect ratio	1:1.78
Length (cm)	51
Width (cm)	28.6
Number of RGB LED triad cells	26
No. of LED dies	104
LED density (cm^2 per LED triad cell)	56.1
Luminous efficiency (L/W)	18.81
Power total (W)	82.95
Total flux (Lumens)	1560
Absorption adjusted viewing area gain	1.60
Backlight axial light (candela m^{-2})	5191

[0121] Thus, the present invention may effectively be used as a backlight for LCD displays. Such a backlight may permit the LCD display to operate with field sequential color, that is, the sequential illumination of the LCD with light of different colors. Such an approach to illuminating the LCD eliminates the need for color filters in color LCD displays, thus increasing the overall efficiency and reducing cost. Optically compensated bend (OCB) mode LCDs are particularly useful for operating in a field sequential color illumination mode, due to their fast response times.

[0122] In addition, a backlight as described may be controlled so that different areas of the display are illuminated at different levels of intensity. This may be advantageous, for example, when displaying an image having high contrast, where one part of the image is very bright and another part of the image is very dark. The brightness of the LEDs illuminating the dark part of the image may be reduced, or they may even be turned off, with the result that the dark areas of the image appear even darker.

[0123] The present invention should not be considered limited to the particular examples described above, but rather should be understood to cover all aspects of the invention as fairly set out in the attached claims. Various modifications, equivalent processes, as well as numerous structures to which the present invention may be applicable will be readily apparent to those of skill in the art to which the present invention is directed upon review of the present specification. The claims are intended to cover such modifications and devices.

We claim:

1. An optical assembly for emitting light, comprising:

an array of inorganic light emitting diodes (LEDs) mounted to a substrate, the LEDs emitting light in a direction generally perpendicular to the substrate; and

an optical sheet disposed over the LEDs, at least a portion of light entering one side of the optical sheet from the LEDs being guided within the optical sheet in a direction generally parallel to the substrate.

2. An assembly as recited in claim 1, wherein the optical sheet comprises a first side facing towards the substrate and a second side facing away from the substrate, at least one light extraction feature being provided with the optical sheet to extract light, that has been guided along the optical sheet from the LEDs, through one of the first and second sides.

3. An assembly as recited in claim 2, wherein the light extraction feature comprises one or more light extraction prisms having prism bases disposed on the second side of the optical sheet.

4. An assembly as recited in claim 3, wherein the light extraction prisms are arranged on the second side of the optical sheet as one or more Fresnel lenses.

5. An assembly as recited in claim 3, wherein the light extraction prisms on the second side are substantially linear.

6. An assembly as recited in claim 3, wherein the light extraction prisms on the second side are curved.

7. An assembly as recited in claim 2, wherein the light extraction feature comprises one or more diffractive structures on at least one of the first and second sides of the optical sheet.

8. An assembly as recited in claim 2, wherein the light extraction feature comprises one or more patches of diffusely reflecting material on at least one of the first and second sides of the optical sheet.

9. An assembly as recited in claim 2, wherein the light extraction feature comprises one or more indentations on one of the sides of the optical sheet.

10. An assembly as recited in claim 2, wherein the light extraction feature comprises one or more grooves on the second side, light guided within the optical sheet being directed by the one or more grooves to the first side of the optical sheet.

11. An assembly as recited in claim 2, further comprising a reflecting layer disposed between the optical sheet and the substrate so that light, directed to the reflecting layer by the extraction feature, is reflected by the reflecting layer out of the optical sheet.

12. An assembly as recited in claim 2, wherein the extraction feature comprises an array of light extraction prisms disposed with respective prism apexes directed towards the optical sheet.

13. An assembly as recited in claim 12, further comprising a coupling layer on the second side of the optical sheet, wherein the guided light passes into the coupling layer and the prism apexes extend into the coupling layer.

14. An assembly as recited in claim 12, wherein light that has coupled from the optical sheet into the light extraction prisms is totally internally reflected by the prisms in a direction away from the optical sheet.

15. An assembly as recited in claim 12, further comprising an optical diffuser, light that has passed through the light extraction prisms from the optical sheet being passed through the optical diffuser.

16. An assembly as recited in claim 12, further comprising a filter, light that has passed through the light extraction prisms from the optical sheet being passed through the filter.

17. An assembly as recited in claim 16, wherein the filter comprises a projection screen.

18. An assembly as recited in claim 16, wherein the filter comprises a polarizer.

19. An assembly as recited in claim 12, wherein the light extraction prisms are substantially linear.

20. An assembly as recited in claim 12, wherein the light extraction prisms are curved.

21. An assembly as recited in claim 20, wherein the curved light extraction prisms are curved in patterns centered on respective LEDs.

22. An assembly as recited in claim 2, wherein the extraction feature comprises a portion of at least one of the sides of the optical sheet that lies nonparallel to the substrate.

23. An assembly as recited in claim 2, wherein the extraction feature comprises a portion of the optical sheet where at least one of the first side and the second side of the optical sheet has a surface non-parallel to the substrate.

24. An assembly as recited in claim 23, wherein the light internally reflects at the surface non-parallel to the substrate.

25. An assembly as recited in claim 23, wherein the surface non-parallel to the substrate is provided with a surface structure that directs light incident thereon towards an opposing side of the optical sheet.

26. An assembly as recited in claim 25, wherein the surface structure comprises one or more turning prisms.

27. An assembly as recited in claim 25, wherein the surface structure comprises one or more surface steps.

28. An assembly as recited in claim 23, wherein the second side of the optical sheet contains one or more indented surfaces disposed above respective LEDs, so that light from the LEDs that passes through the optical sheet from the LEDs in a direction substantially normal to the optical sheet is internally reflected at the one or more indented surfaces.

29. An assembly as recited in claim 2, wherein the extraction feature comprises one or more surface structures disposed on the first side of the optical sheet.

30. An assembly as recited in claim 29, wherein the one or more surface structures on the first side of the optical sheet comprise angled reflective faces so that light, that has been guided within the optical sheet, is directed by the angled reflective faces to be incident on the second side of the optical sheet at an angle that permits transmission of the light through the second side.

31. An assembly as recited in claim 29, wherein the one or more surface structures on the first side of the optical sheet comprise diffusive elements that diffusely reflect light incident thereon.

32. An assembly as recited in claim 2, wherein the extraction feature comprises at least one continuous light extraction feature surrounding a respective LED.

33. An assembly as recited in claim 2, wherein the extraction feature comprises at least one light extraction feature that does not continuously surround its respective LED.

34. An assembly as recited in claim 2, wherein the extraction features comprise areas of diffusely reflecting material.

35. An assembly as recited in claim 34, wherein the diffusely reflecting material is arranged so as to provide a greater degree of diffuse reflection at positions illuminated by relatively more intense light from the LEDs than for positions illuminated by relatively less intense light from the LEDs.

36. An assembly as recited in claim 1, further comprising light management optics to direct light extracted from the optical sheet.

37. An assembly as recited in claim 36, wherein the light management optics comprise at least a first brightness enhancing prismatic film having an array of prisms arranged to direct light extracted from the optical sheet in a direction more parallel to an axis normal to the optical sheet.

38. An assembly as recited in claim 36, wherein the light management optics further comprises a second brightness enhancing optical film having an array of prisms arranged to direct light extracted from the optical sheet in a direction more parallel to the axis normal to the optical sheet, the prisms of the second brightness enhancing optical film extending in a direction perpendicular to an extension direction of the prisms of the first brightness enhancing sheet.

39. An assembly as recited in claim 1, further comprising a projection screen disposed over the optical sheet so that light extracted from the optical sheet passes through the projection screen.

40. An assembly as recited in claim 1, wherein the optical sheet comprises contains one or more elements to deflect some of the light from the LEDs, that would otherwise pass through the optical sheet, within the optical sheet.

41. An assembly as recited in claim 40, wherein the one or more elements comprise indented surfaces disposed above respective LEDs, so that some of the light from the LEDs that passes through the optical sheet from the LEDs in a direction substantially normal to the optical sheet is internally reflected within the optical sheet at the one or more indented surfaces.

42. An assembly as recited in claim 40, wherein the one or more elements comprise one or more diffusers disposed with the optical sheet to diffusely direct some of the light from the LEDs within the optical sheet.

43. An assembly as recited in claim 1, wherein the optical sheet generally lies parallel to the substrate.

44. An assembly as recited in claim 1, wherein the LEDs are disposed on the substrate as LED dies.

45. An assembly as recited in claim 1, further comprising an intermediate layer disposed between the optical sheet and the substrate.

46. An assembly as recited in claim 45, wherein the intermediate layer is reflective.

47. An assembly as recited in claim 45, wherein the intermediate layer is provided with at least one light extraction feature to extract light that has been guided along the optical sheet from the LEDs.

48. An assembly as recited in claim 47, wherein the light extraction feature comprises one or more angled surfaces non-parallel to the substrate.

49. An assembly as recited in claim 47, wherein the light extraction feature comprises one or more patches of diffusely reflective material.

50. An assembly as recited in claim 45, further comprising an arrangement of areas of diffusely reflecting material disposed to diffusely reflect at least some of the light that has passed out of the optical sheet.

51. An assembly as recited in claim 50, wherein the intermediate layer is reflective, and some of the light diffusely reflected by the areas of diffusely reflecting material is reflected by the reflective intermediate layer so as to pass between the areas of diffusely reflecting material.

52. An assembly as recited in claim 51, further comprising a diffuser disposed to diffuse light that has passed between the areas of diffusely reflecting material.

53. An assembly as recited in claim 1, wherein the substrate is reflective.

54. An assembly as recited in claim 53, wherein the substrate is provided with at least one light extraction feature to extract light that has been guided along the optical sheet from the LEDs.

55. An assembly as recited in claim 53, wherein the light extraction feature comprises one or more angled surfaces non-parallel to the substrate.

56. An assembly as recited in claim 53, wherein the light extraction feature comprises one or more patches of diffusely reflective material.

57. An assembly as recited in claim 1, wherein the optical sheet comprises electrical conductors disposed on a side of the optical sheet facing the LEDs, the electrical conductors connecting to emitting sides of respective LEDs.

58. An assembly as recited in claim 1, wherein the substrate comprises electrical conductors connecting to base sides of respective LEDs.

59. An assembly as recited in claim 1, further comprising an intermediate layer between the optical sheet and the substrate, and electrical conductors on the intermediate layer connecting to respective LEDs.

60. An assembly as recited in claim 1, wherein the assembly is flexible so as to be formable into a non-planar shape.

61. A light emitting system having a plurality of individually illuminated light emitting elements, the system comprising:

an array of inorganic light emitting diodes (LEDs), different LEDs corresponding to respective light emitting elements of the light emitting system;

a light spreader sheet disposed over the LEDs, light entering the light spreader sheet from the LEDs being spread transversely within the spreader sheet over an area corresponding to the respective light emitting elements of the light emitting system, the light spreader sheet comprising light directing features that direct the spread light out of the spreader sheet.

62. A system as recited in claim 61, further comprising a power supply connected to supply power to the LEDs.

63. A system as recited in claim 61, further comprising a control unit coupled to control optical emission of the LEDs.

64. A system as recited in claim 63, wherein the control unit controls individual LEDs to emit independently of other LEDs, so that the light emitting system has an illuminated area that conveys information to a viewer.

65. A system as recited in claim 61, wherein each light emitting element is associated with at least one LED.

66. A system as recited in claim 65, further comprising a color converter disposed with the at least one LED to produce color converted light from light emitted by the at least one LED.

67. A system as recited in claim 65, wherein each light emitting element is associated with three LEDs mounted together, the three LEDs being adapted to emit light in three different wavelength ranges.

68. A system as recited in claim 61, further comprising a projection element disposed to project light, received from the spreader sheet, dispersed over a desired viewing angle.

69. A system as recited in claim 68, wherein the projection element comprises a diffusive screen.

70. A system as recited in claim 68, wherein the projection element comprises a refractive screen.

71. A system as recited in claim 61, further comprising at least one light blocking element disposed between adjacent light emitting elements to reduce light generated in one of the light emitting elements from passing to an adjacent light emitting element.

72. A system as recited in claim 71, wherein the light blocking element comprises a groove formed in the light spreader sheet.

73. A system as recited in claim 72, wherein the groove is filled with a reflective material.

74. A system as recited in claim 72, wherein the groove is formed in a surface of the light spreader sheet facing towards the LEDs.

75. A system as recited in claim 72, wherein the groove is formed in a surface of the light spreader sheet facing away from the LEDs.

76. A light emitting system having a plurality of individually illuminated light emitting elements, the system comprising:

an array of inorganic light emitting diodes (LEDs) emitting light generally in a light emission direction;

light spreading means for laterally spreading light in a direction across the array of the LEDs; and

light directing means for directing light from the light spreading means in a desired illumination direction.

77. An assembly for emitting light, comprising:

an array of inorganic light emitting diodes (LEDs) arranged on a substrate to emit light generally in a light emission direction;

an array of reflectors disposed with the LEDs, the reflectors defining individual portions of a reflector sheet, the reflectors having respective apertures, respective LEDs of the array of LEDs protruding through the respective apertures, the substrate being positioned to a first side of the reflector sheet, light emitting surfaces of the LEDs being positioned to a second, reflecting side of the reflector sheet; and

a screen layer disposed on the second side of the reflector sheet, at least some of the light from the LEDs being directed by the screen layer after reflecting off the curved reflectors.

78. An assembly as recited in claim 77, wherein the reflector sheet comprises a reflector sheet base having a surface with curved regions, and a reflective layer disposed on the curved regions of the reflector sheet base.

79. An assembly as recited in claim 78, wherein the reflective layer comprises multiple polymer layers of alternating refractive index.

80. An assembly as recited in claim 77, wherein the reflectors are curved with a generally paraboloidal curve.

81. An assembly as recited in claim 77, wherein the substrate comprises conductors for carrying electrical current between the LEDs and a power source.

82. An assembly as recited in claim 77, wherein at least some of the LEDs are provided on the substrate as LED dies.

83. An assembly as recited in claim 82, wherein at least one of the LED dies is a flip-chip LED die, and the substrate comprises a first conductor coupled to a first electrode of the flip-chip LED die and a second conductor coupled to a second electrode of the flip-chip LED die.

84. An assembly as recited in claim 77, wherein the screen layer comprises a diffuser sheet.

85. An assembly as recited in claim 77, wherein the screen layer comprises a screen having refracting elements.

86. An assembly as recited in claim 85, wherein the screen having refracting elements comprises a screen with a lensed surface.

87. An assembly as recited in claim 85, wherein the screen having refracting elements comprises a beaded screen.

88. An assembly as recited in claim 77, further comprising a light directing sheet disposed between the reflector sheet and the screen layer.

89. An assembly as recited in claim 88, wherein the light directing sheet comprises refracting surface features to refract light passing therethrough.

* * * * *