US 20060083023A1

(19) United States

(12) Patent Application Publication

(10) Pub. No.: US 2006/0083023 A1

(43) Pub. Date: Apr. 20, 2006

Ayabe et al.

(54) LIGHT EMITTING SOURCE AND A LIGHT EMITTING SOURCE ARRAY

(75) Inventors: **Takahiro Ayabe**, Otsu-shi (JP); **Akira Matsui**, Joyo-shi (JP); **Kenji Homma**, Soraku-gun (JP); **Hironobu Kiyomoto**, Nara-shi (JP)

Correspondence Address:
OSHA LIANG L.L.P.
1221 MCKINNEY STREET
SUITE 2800
HOUSTON, TX 77010 (US)

(73) Assignee: **OMRON Corporation**, Kyoto (JP)

(21) Appl. No.: **11/252,518**

(22) Filed: **Oct. 18, 2005**

(30) **Foreign Application Priority Data**

Dec. 28, 2004 (JP) 2004-379520
Oct. 19, 2004 (JP) 2004-304975

Publication Classification

(51) **Int. Cl.**
F21V 7/04 (2006.01)

(52) **U.S. Cl.** **362/607**

(57) **ABSTRACT**

On the rear surface of a transparent molded unit is provided a reflecting member. In a central part of the molded unit are encapsulated light emitting devices. In the vicinity of the central part of the reflecting member is formed a reflecting area that is angularly inclined to the rear surface as it moves to the outer circumferential direction. A toric channel is provided on a light irradiation surface of the molded unit, and a slope total reflection area is provided in its inner circumferential side. Light emanating from the light emitting devices is reflected at the slope total reflection area, and further reflected at the direct output area. Then, after being further reflected at the reflecting area of the reflecting member, the light is guided to the outer circumferential end of the reflecting member, and is outputted forward from the total reflection area by being reflected at the outer circumferential end of the reflecting member.

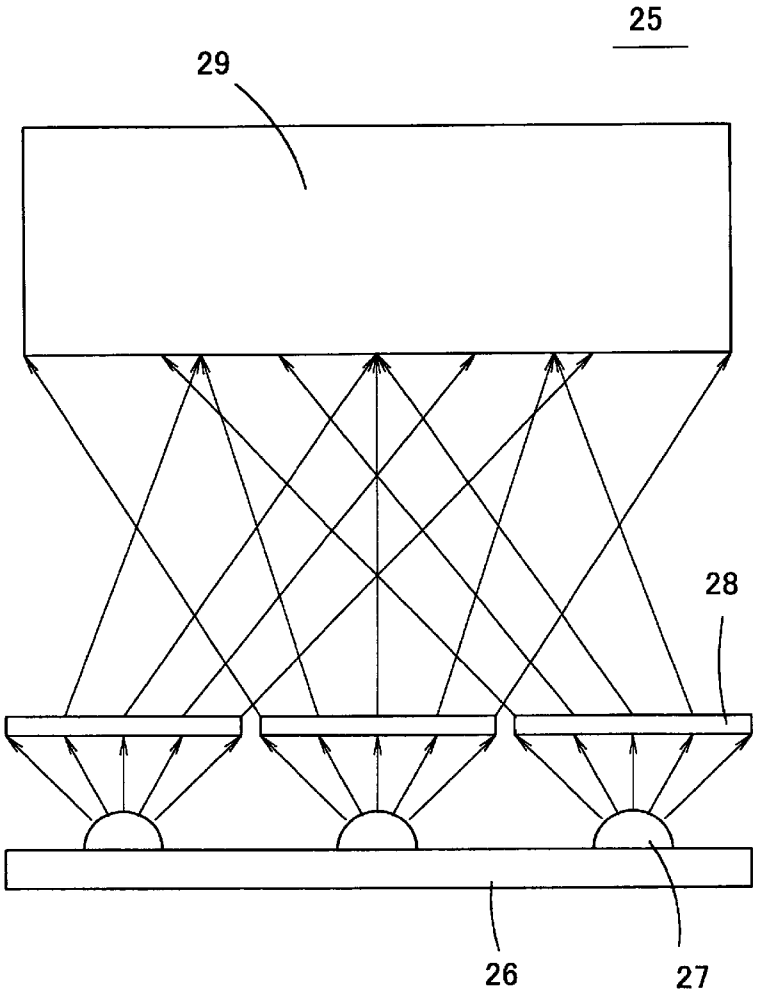

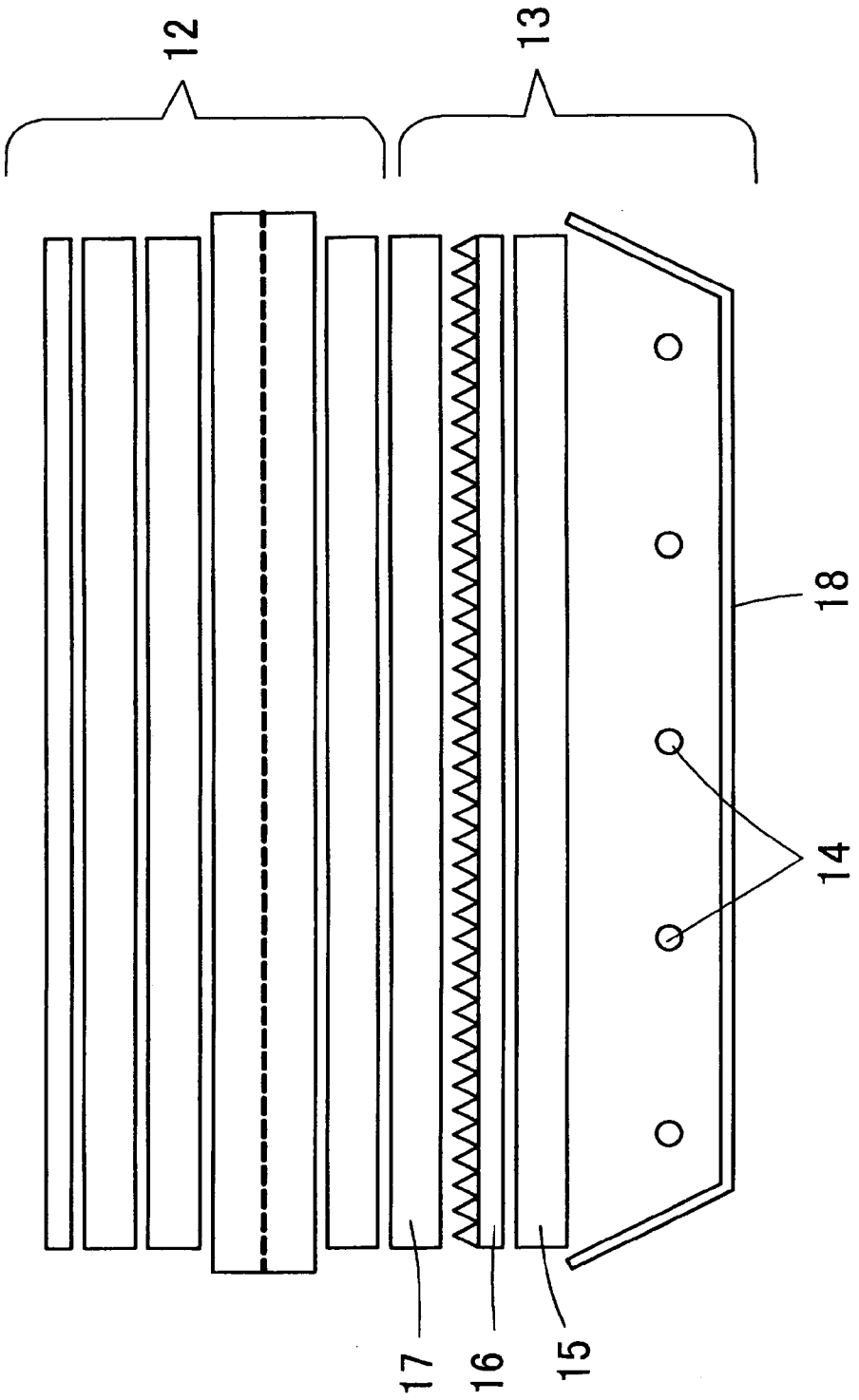

Fig. 1

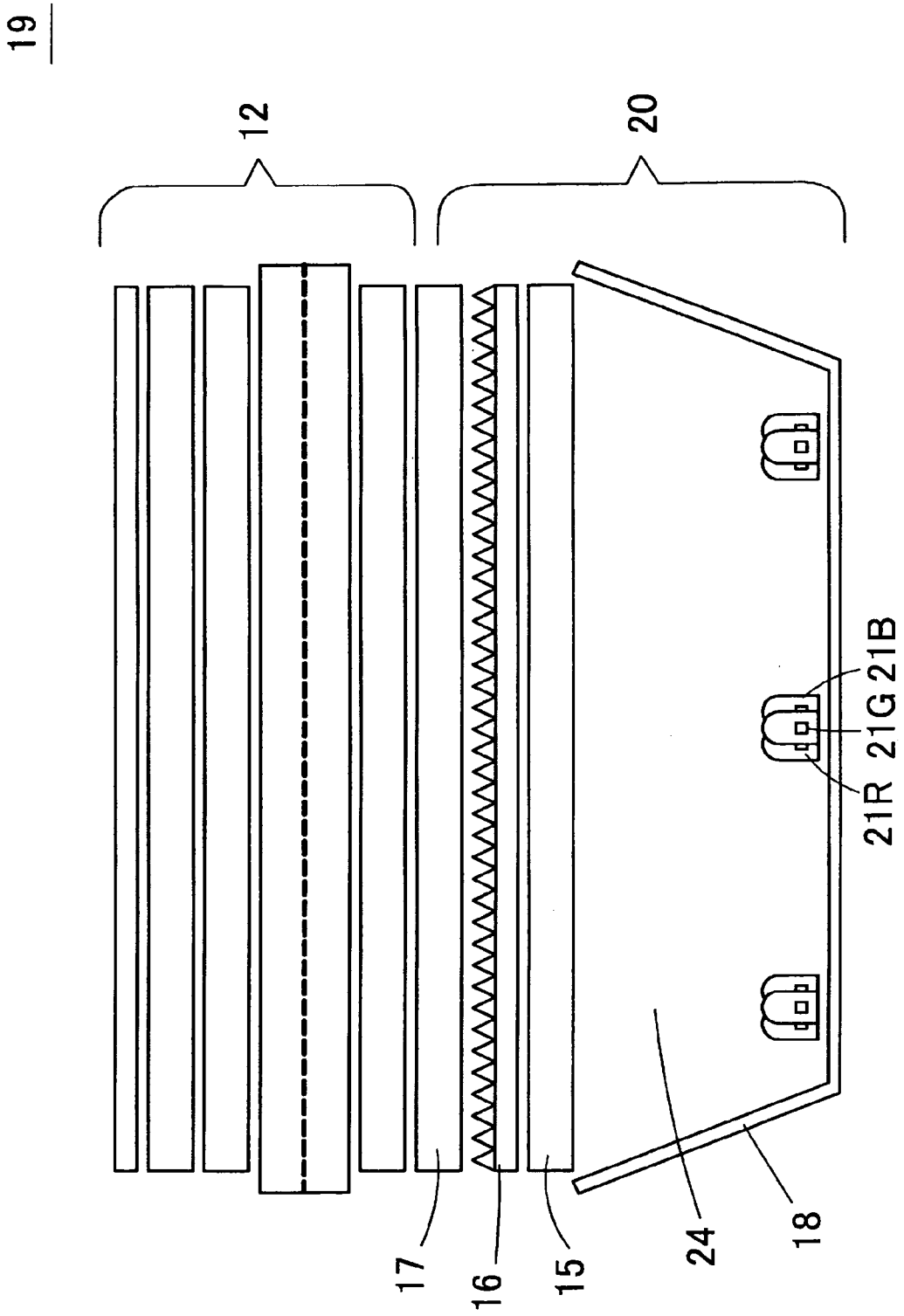

Fig. 2

Fig. 3

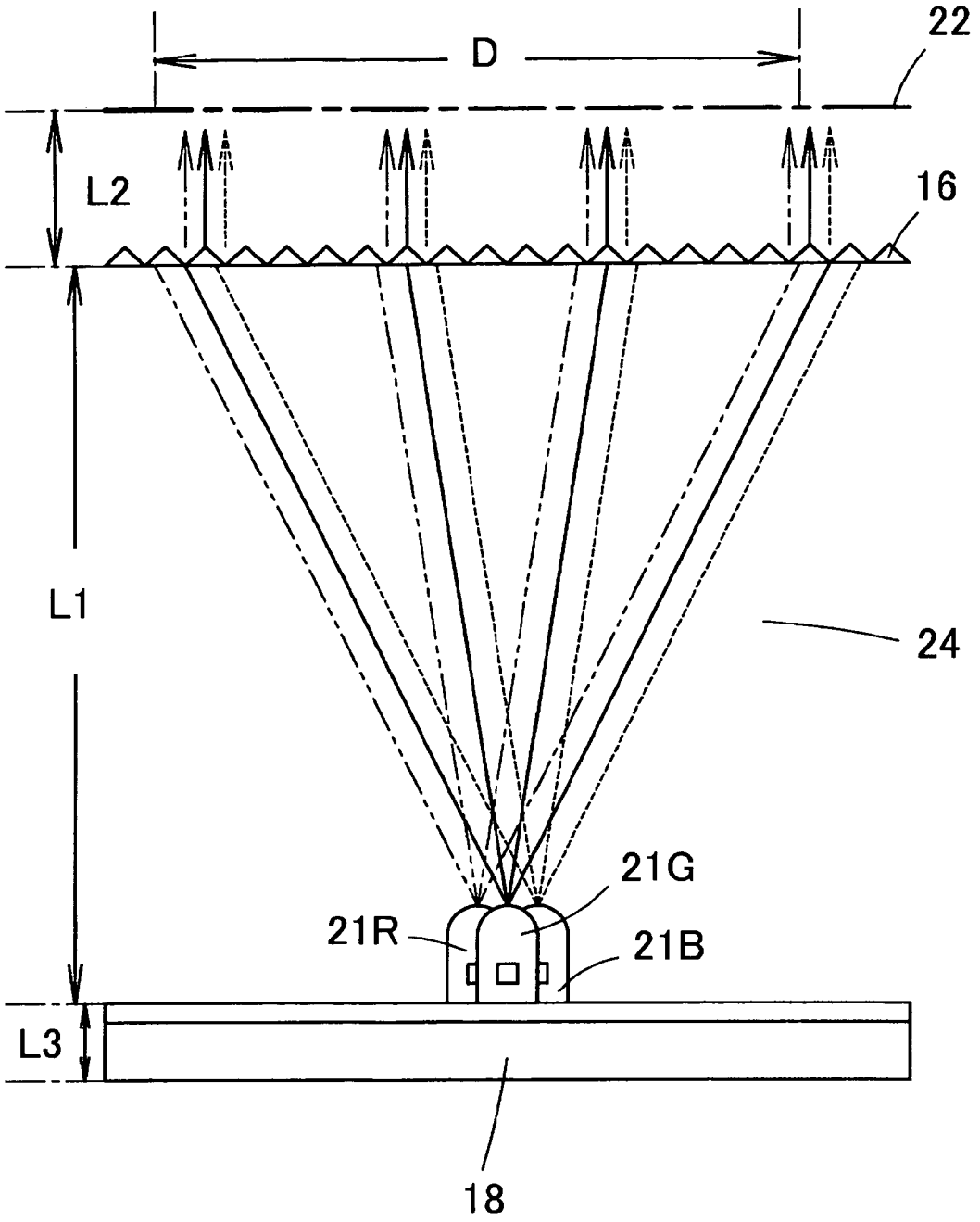

Fig. 4B

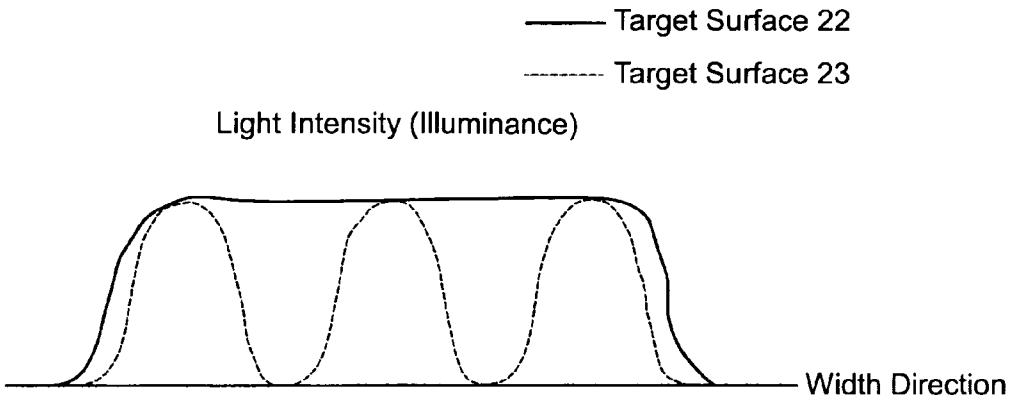
Target Surface 22
Target Surface 23
Light Intensity (Illuminance)
Width Direction

Fig. 4A

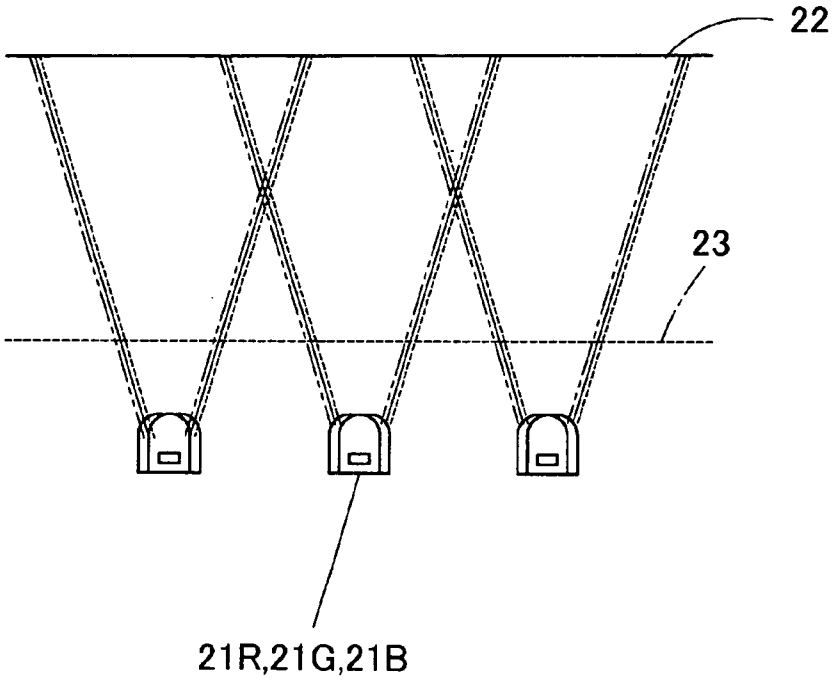
22
23
21R,21G,21B

Fig. 5B

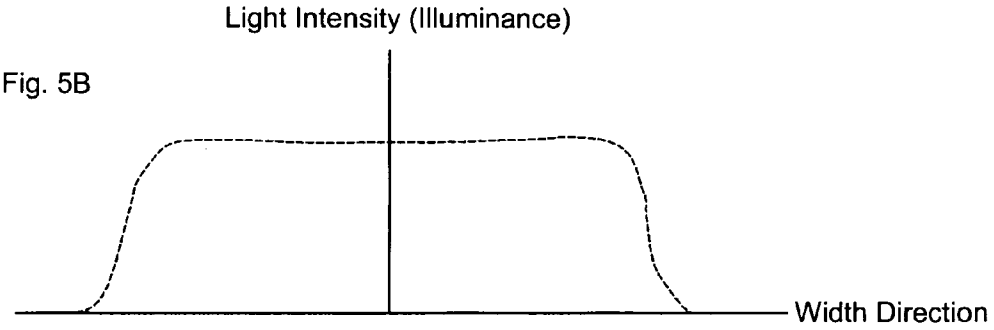
Light Intensity (Illuminance)
Width Direction

Fig. 5A

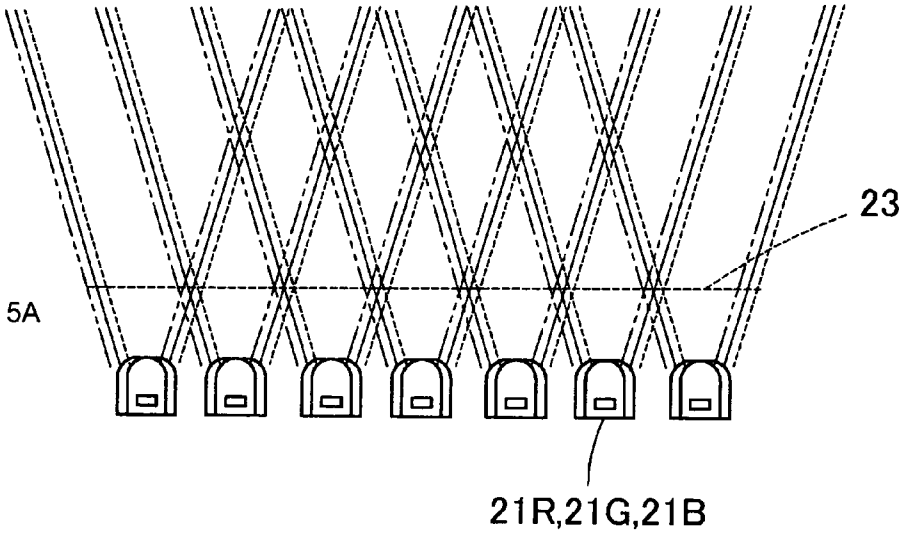
23
21R,21G,21B

Fig. 6

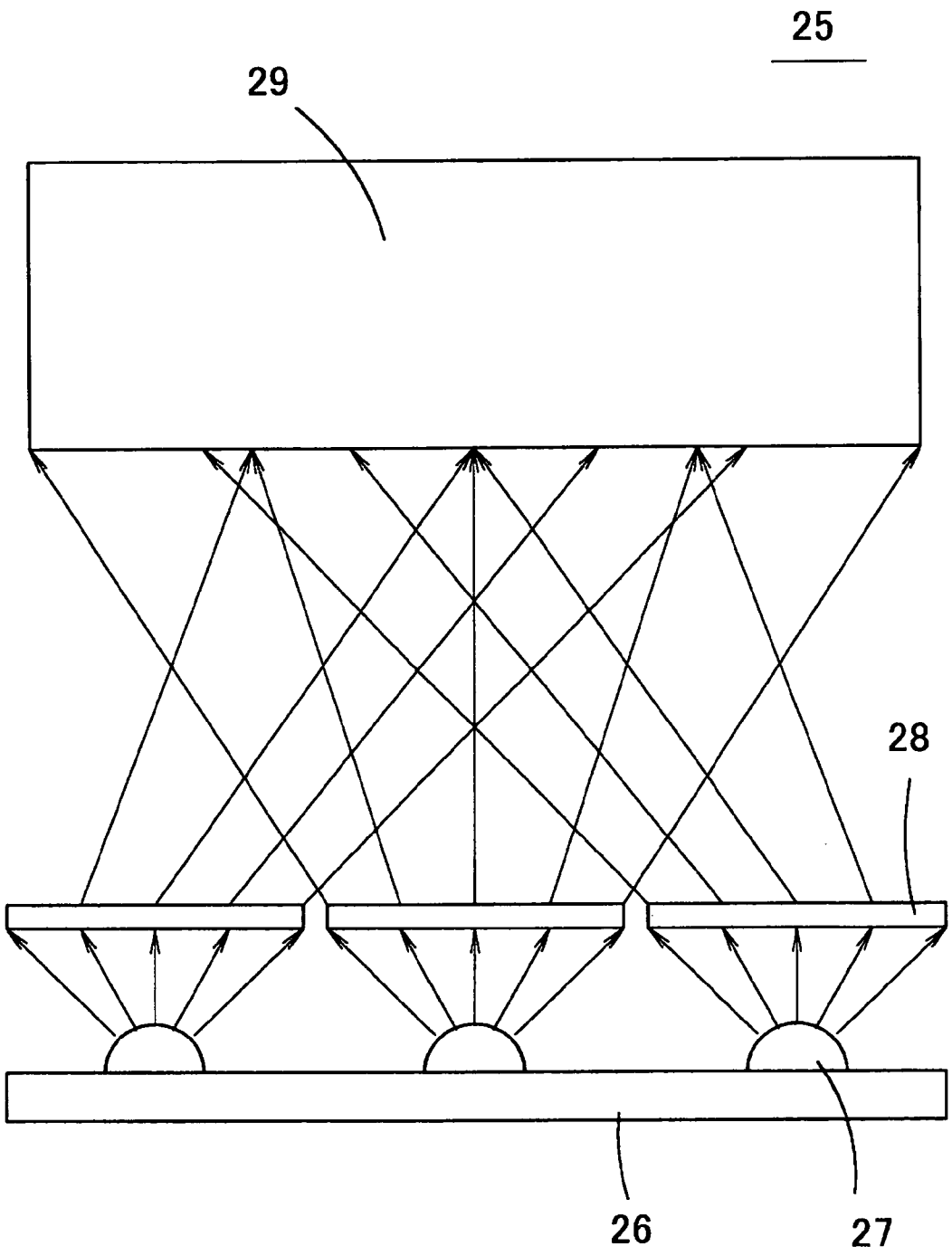

Fig. 7

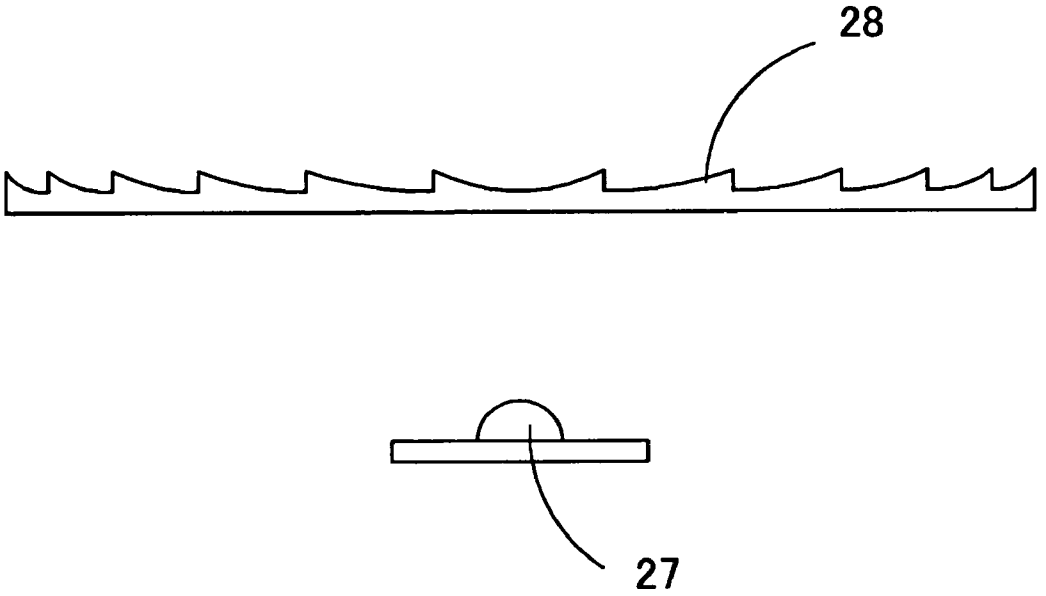

Fig. 8B

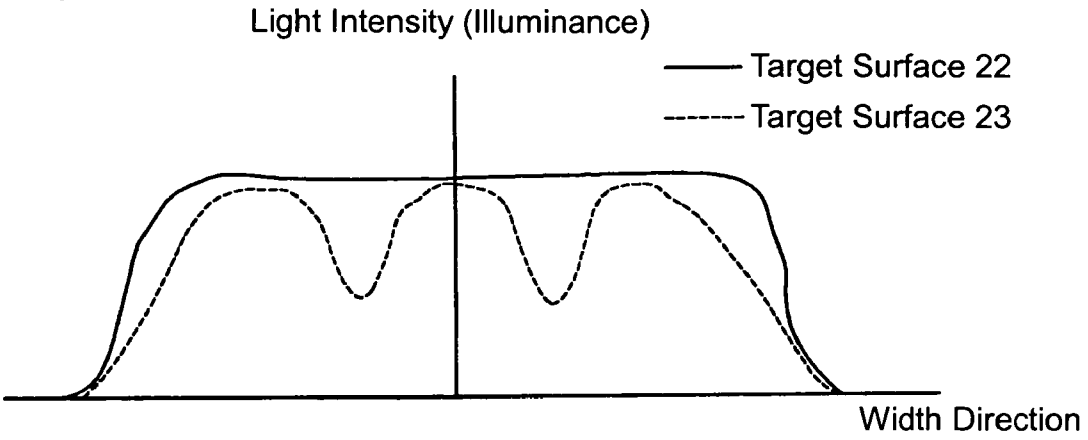
Light Intensity (Illuminance)
Target Surface 22
Target Surface 23
Width Direction

Fig. 8A

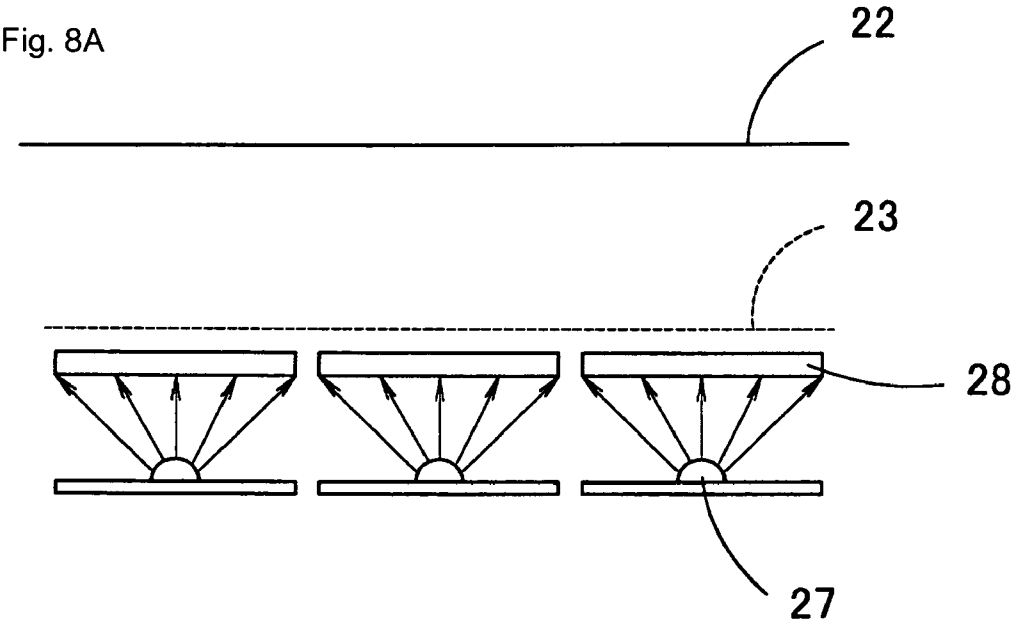
22
23
28
27

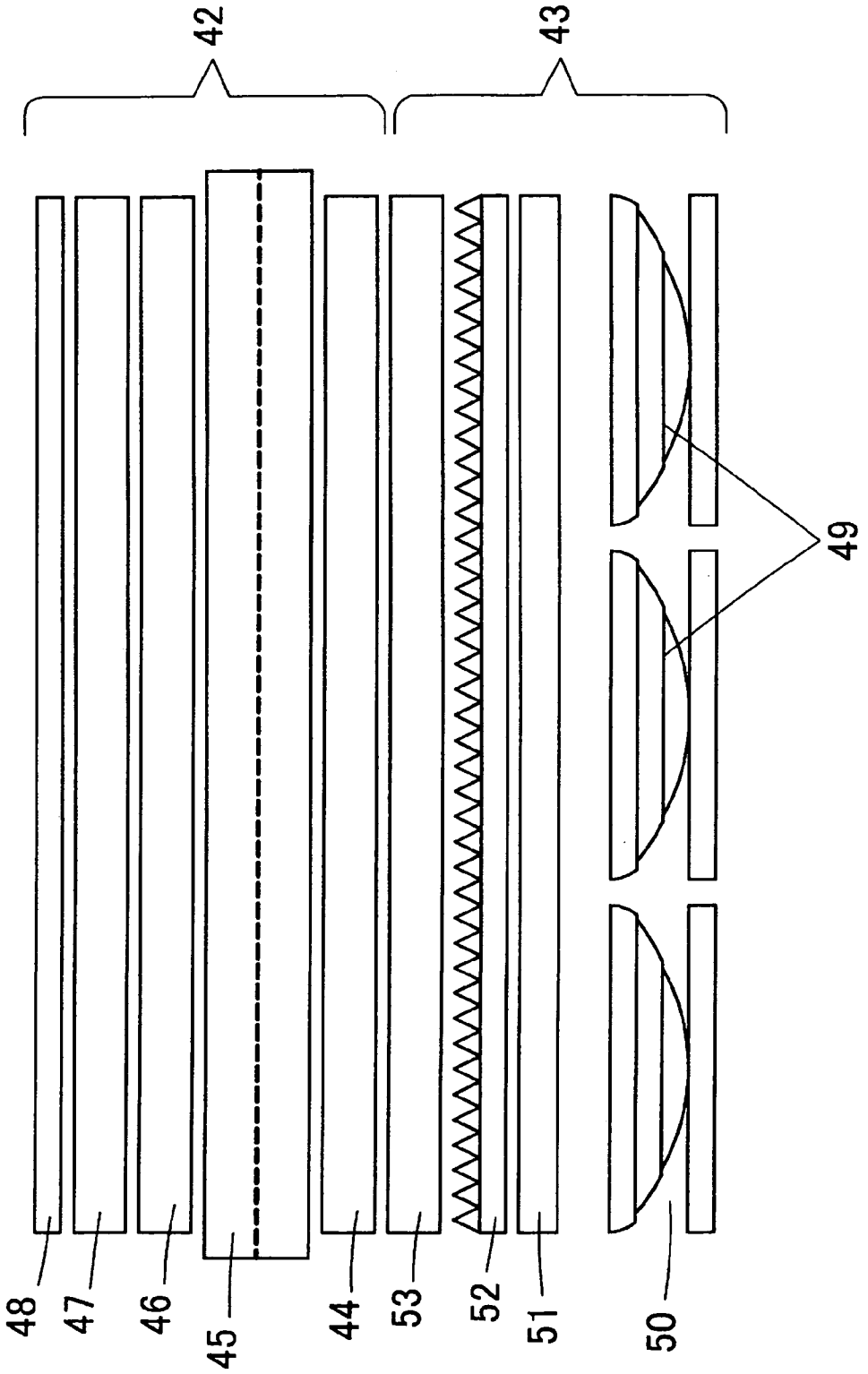

Fig. 9

Fig. 10

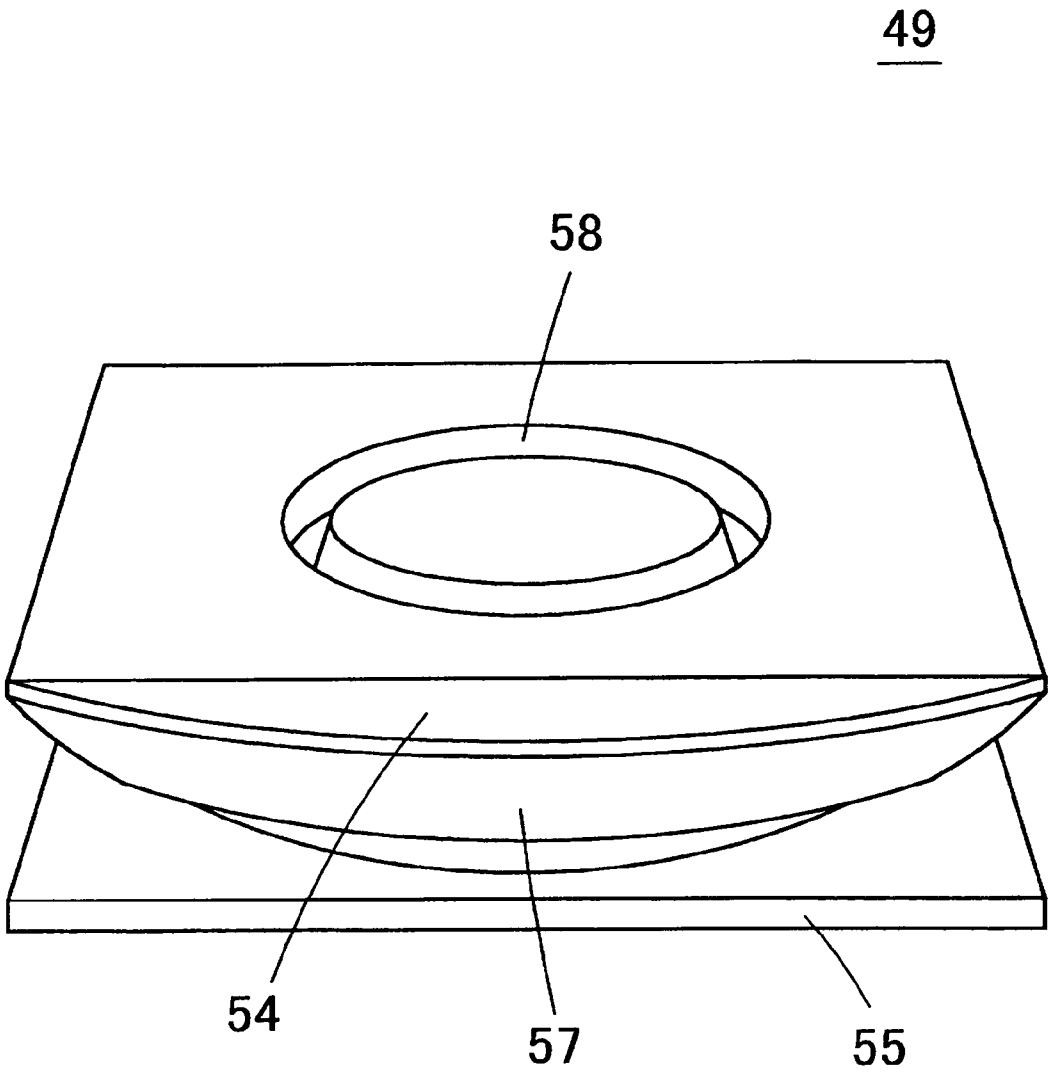

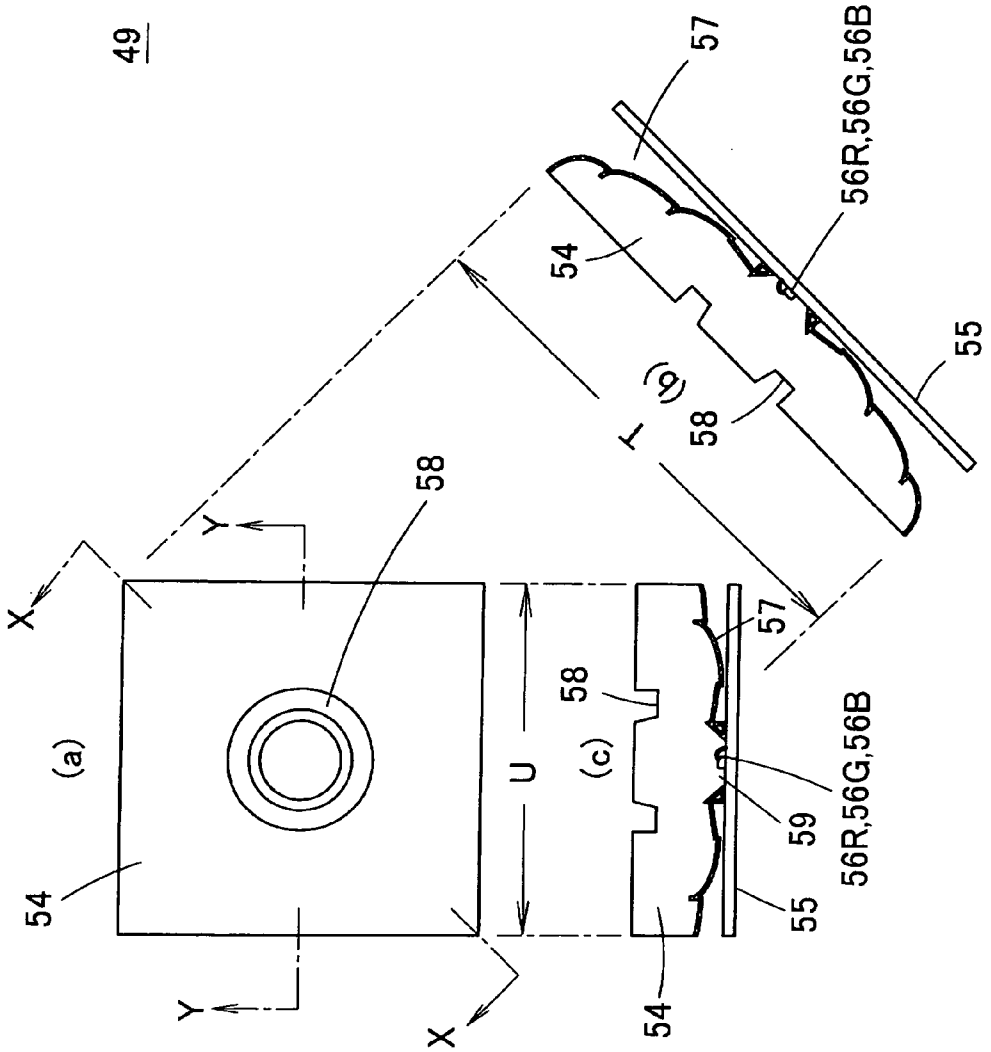

Fig. 11

Fig. 12A

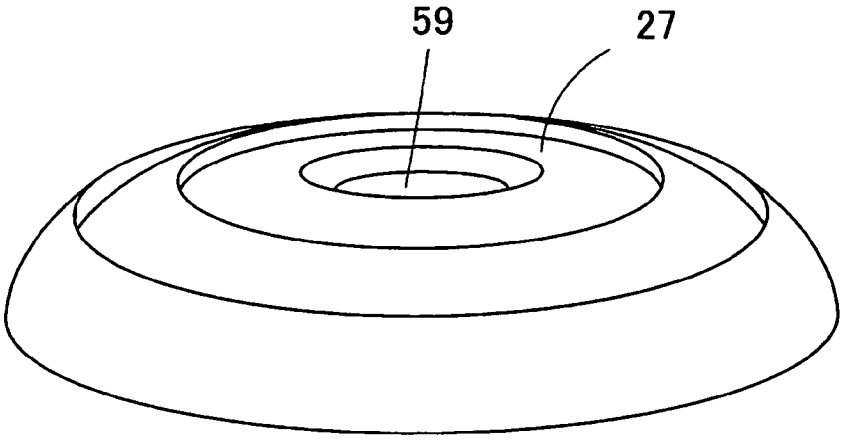

Fig. 12B

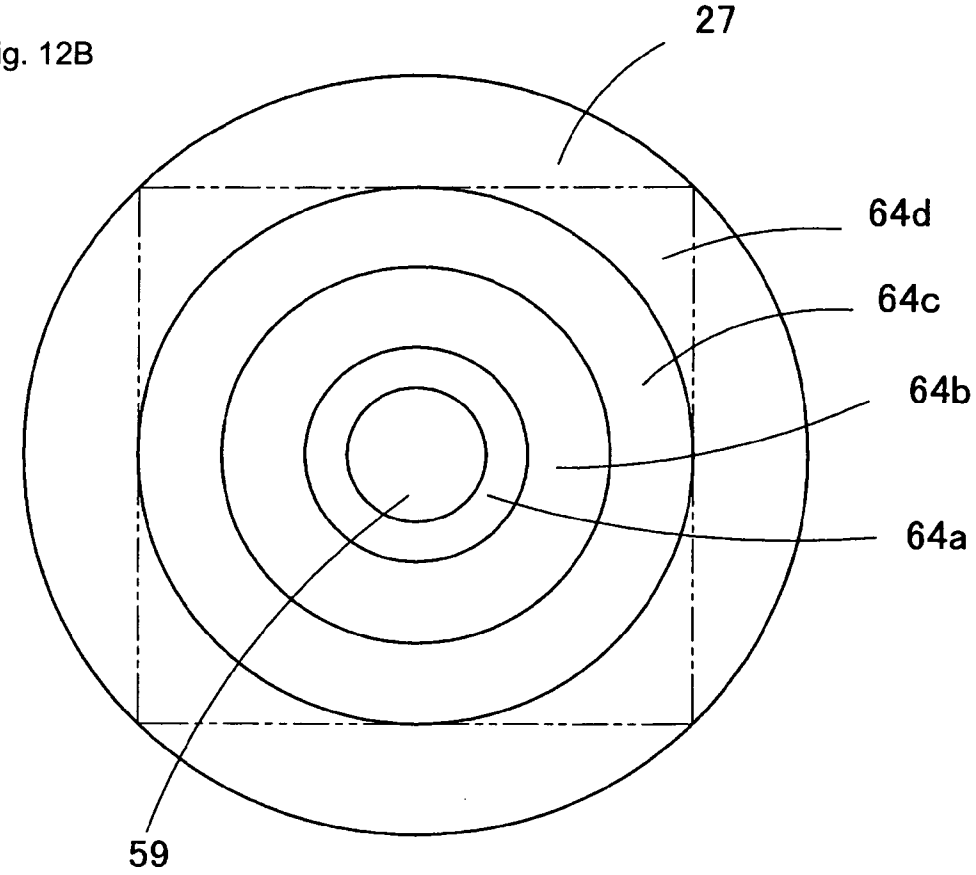

Fig. 13

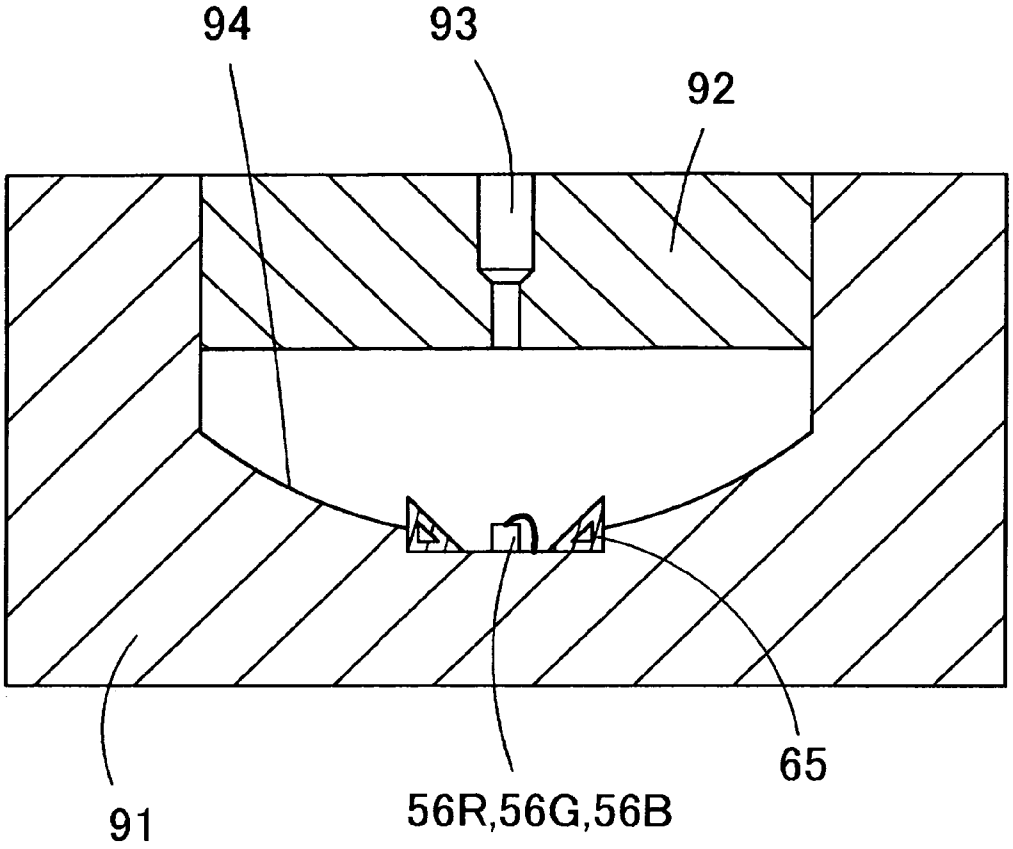

Fig. 14A

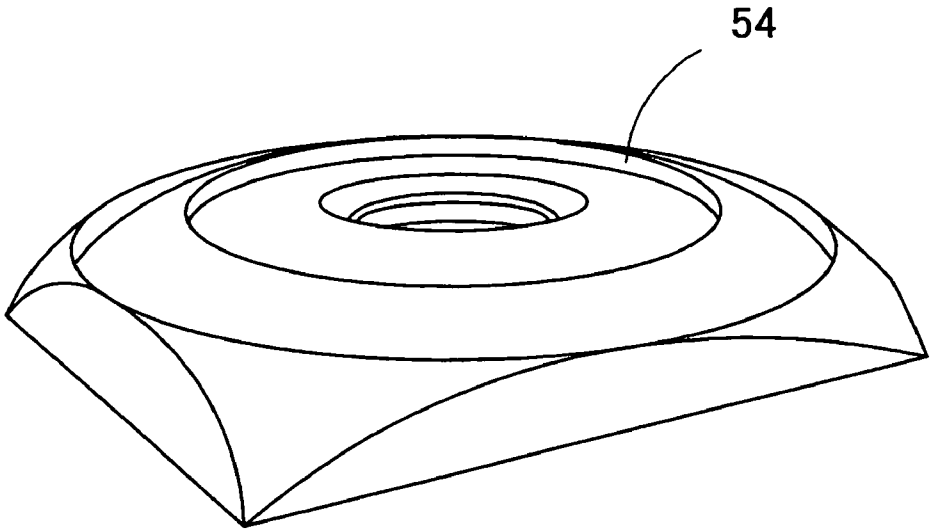

Fig. 14B

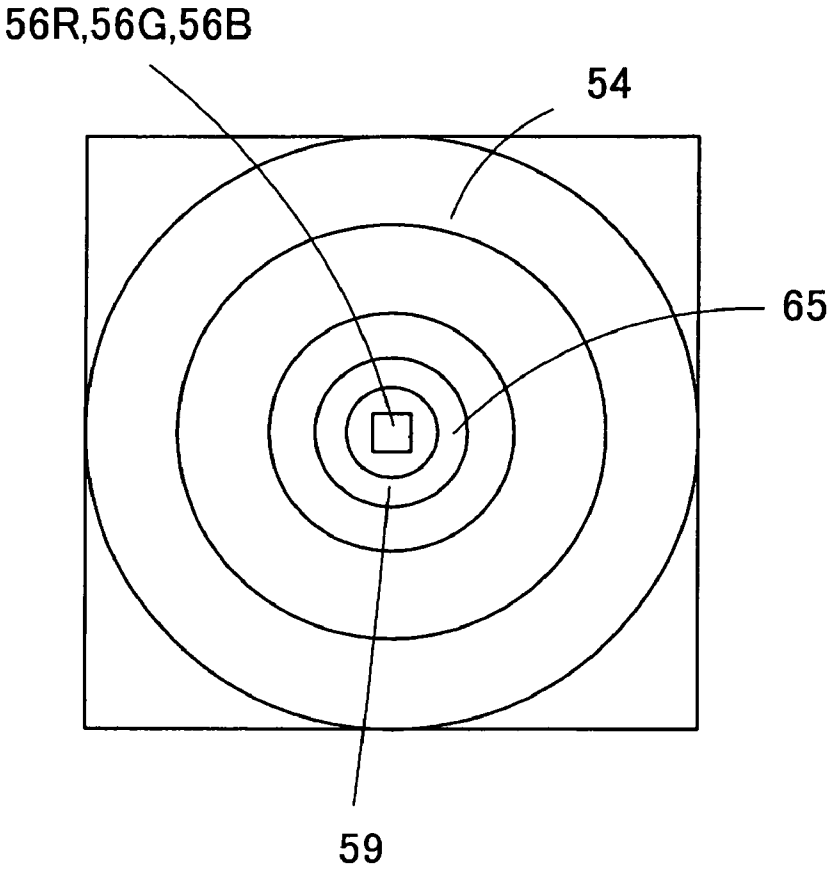

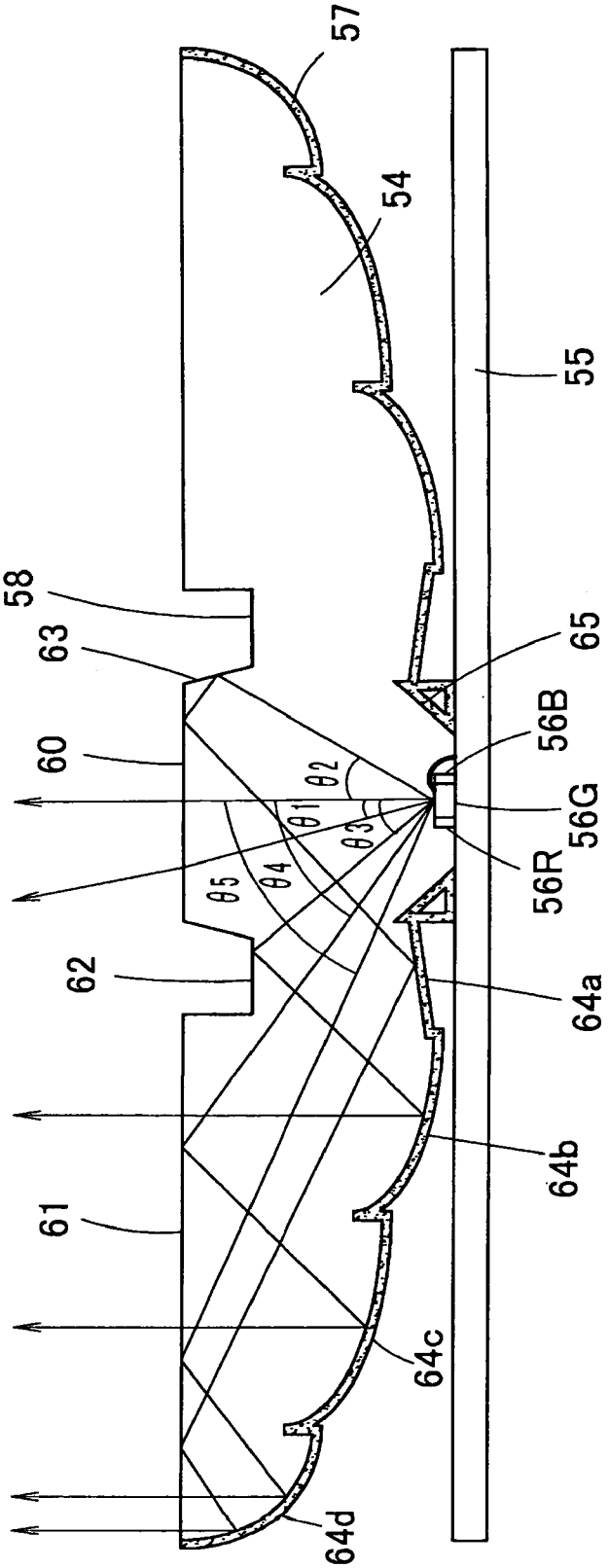
49
57
54
55
58
63
65
60
56B
θ2
θ1
θ3
56G
θ5
θ4
56R
62
64a
64b
61
64c
64d

Fig. 15

Fig. 16

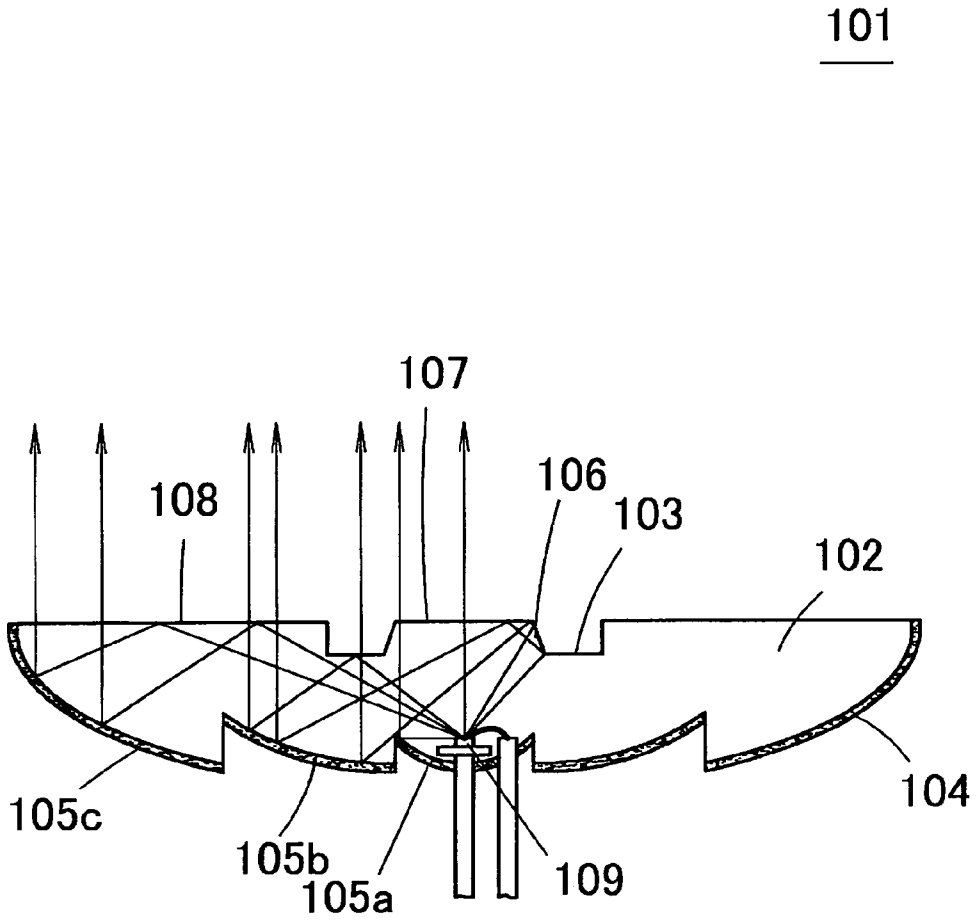

Fig. 17

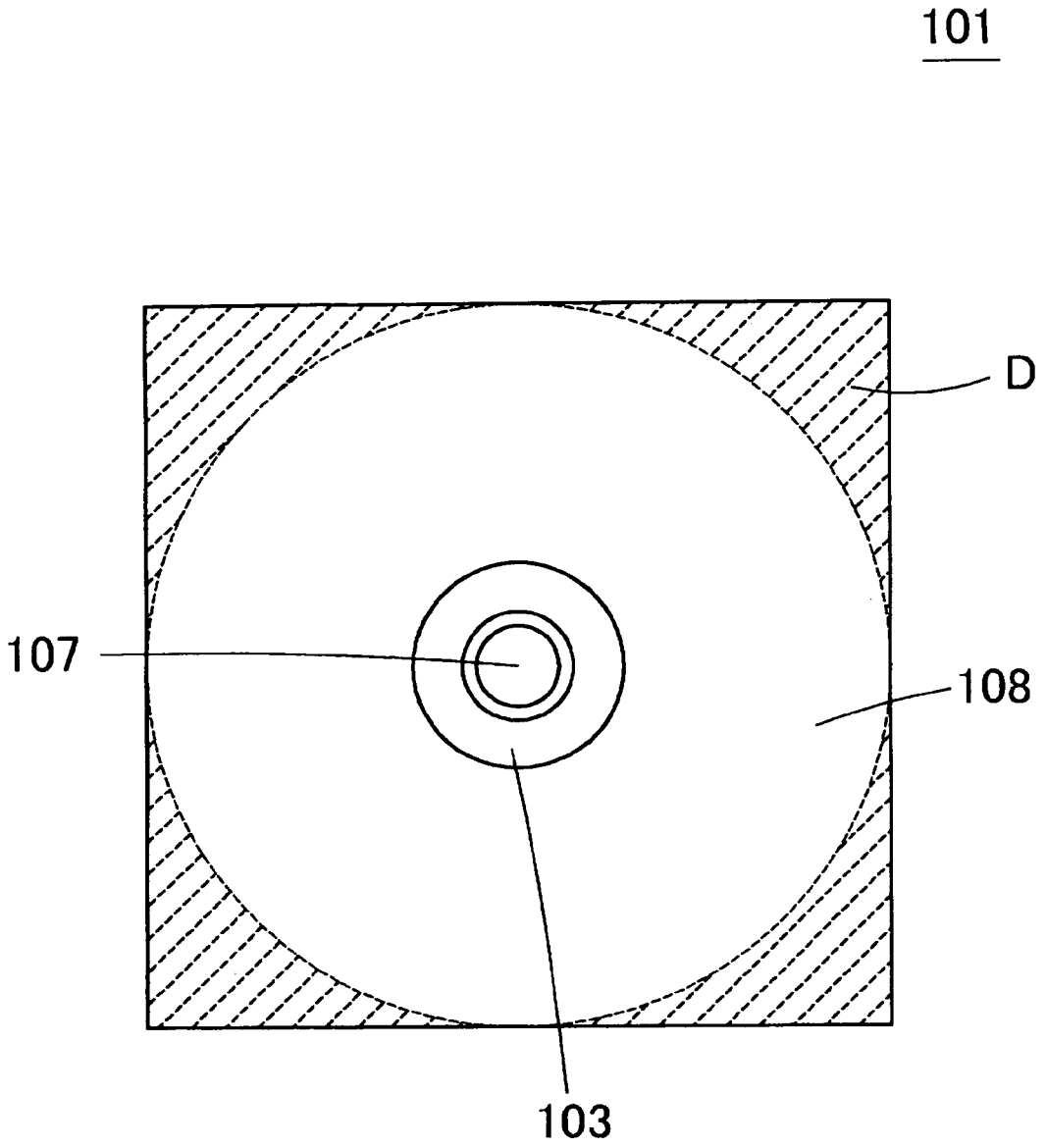

Fig. 18

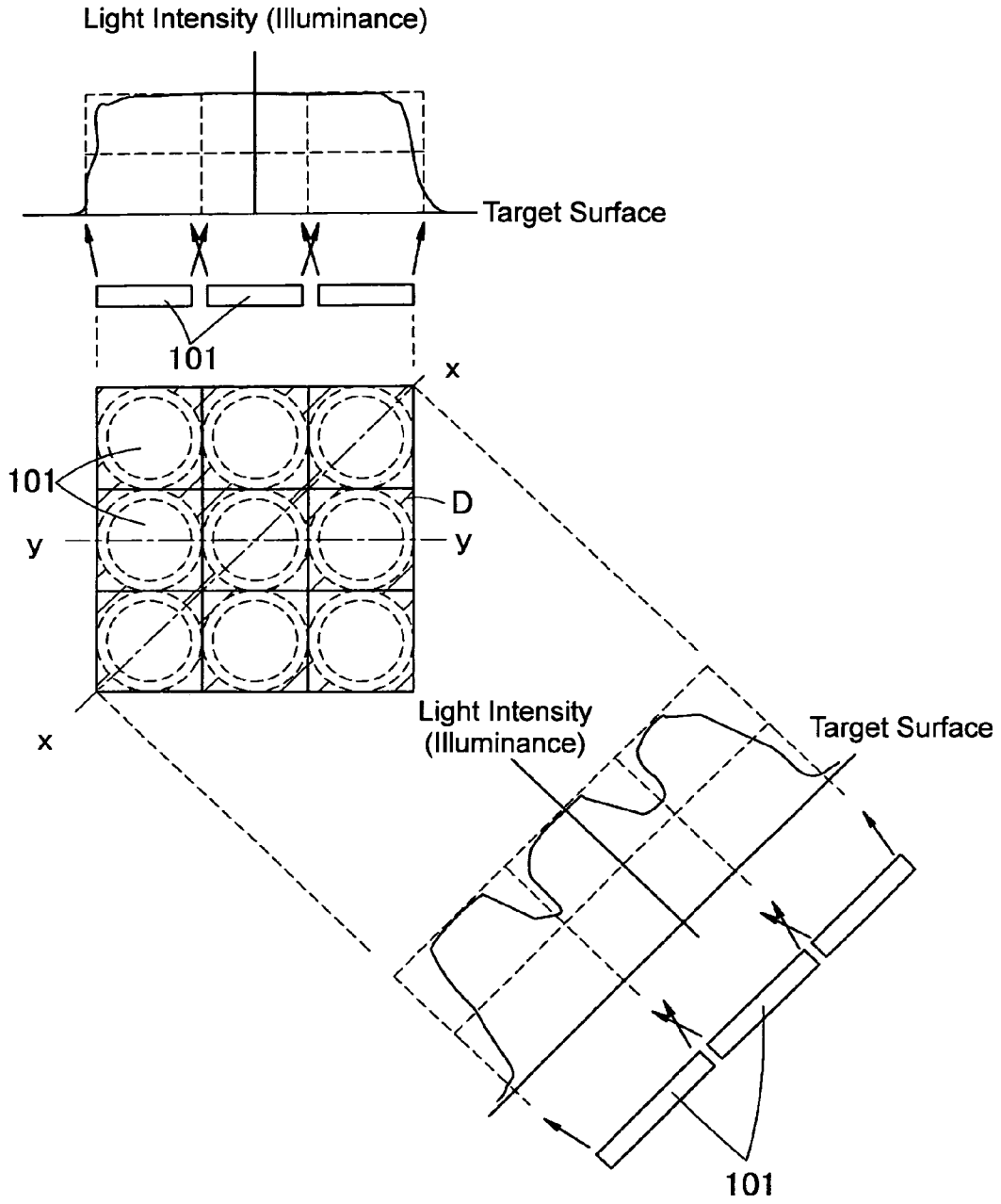
Light Intensity (Illuminance)
Target Surface
101
x
101
D
y
y
x
Light Intensity
(Illuminance)
Target Surface
101

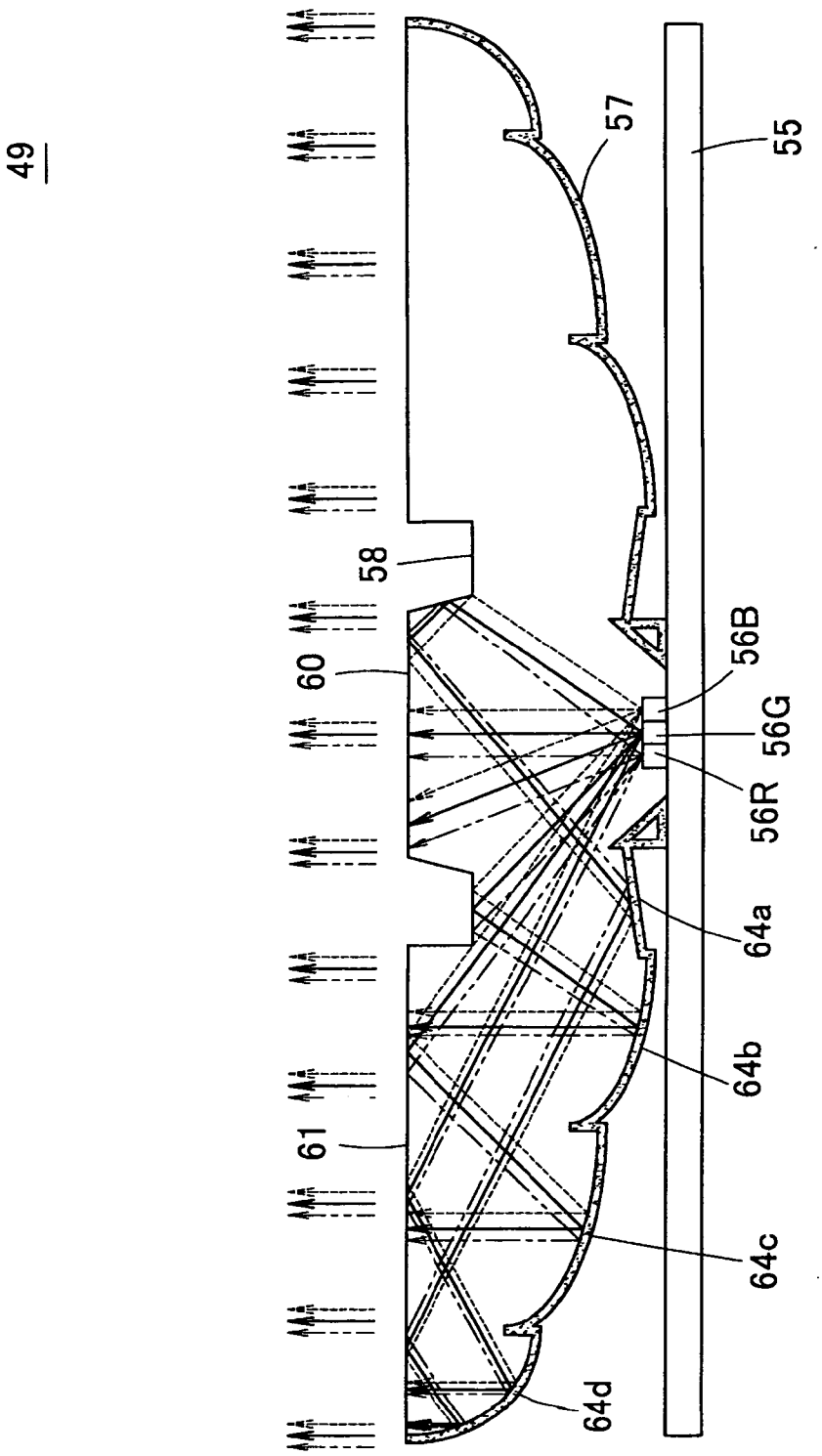

Fig. 19

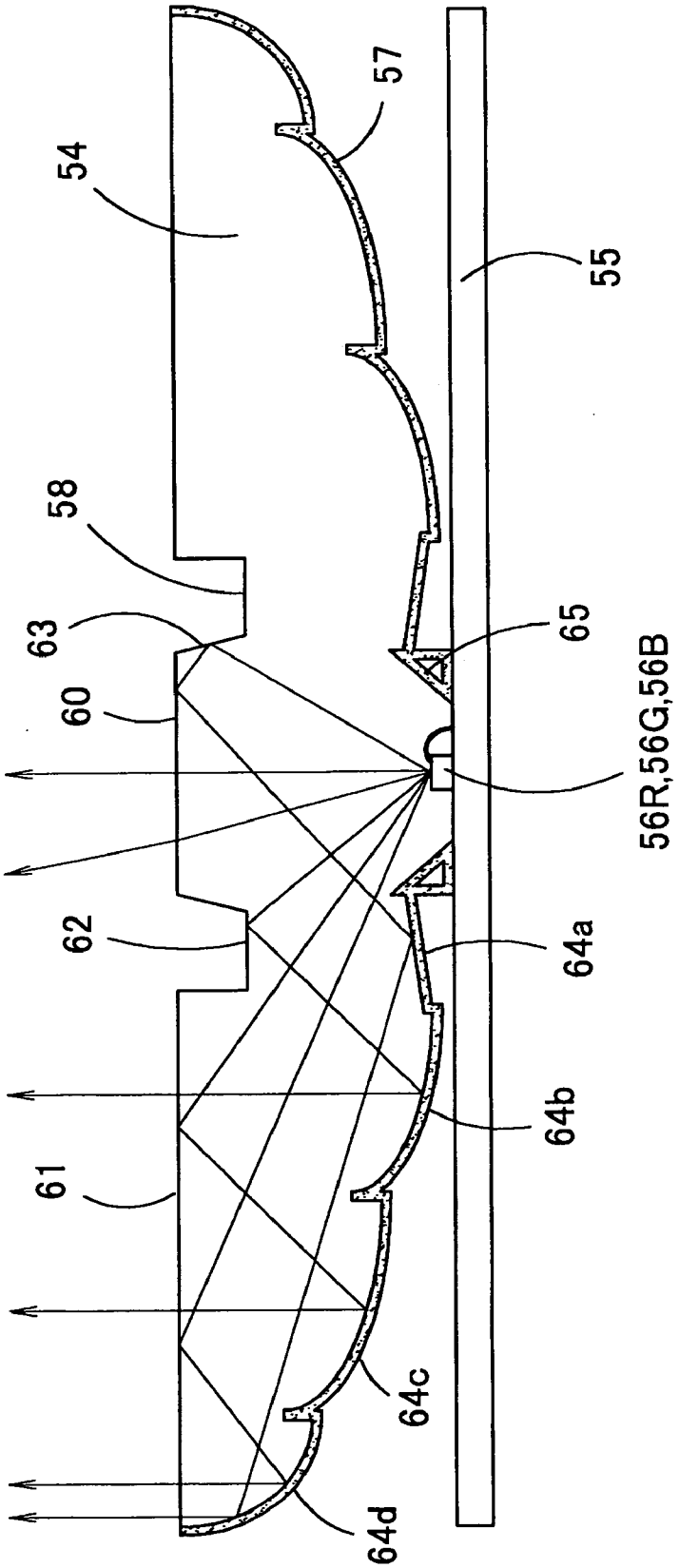

Fig. 20

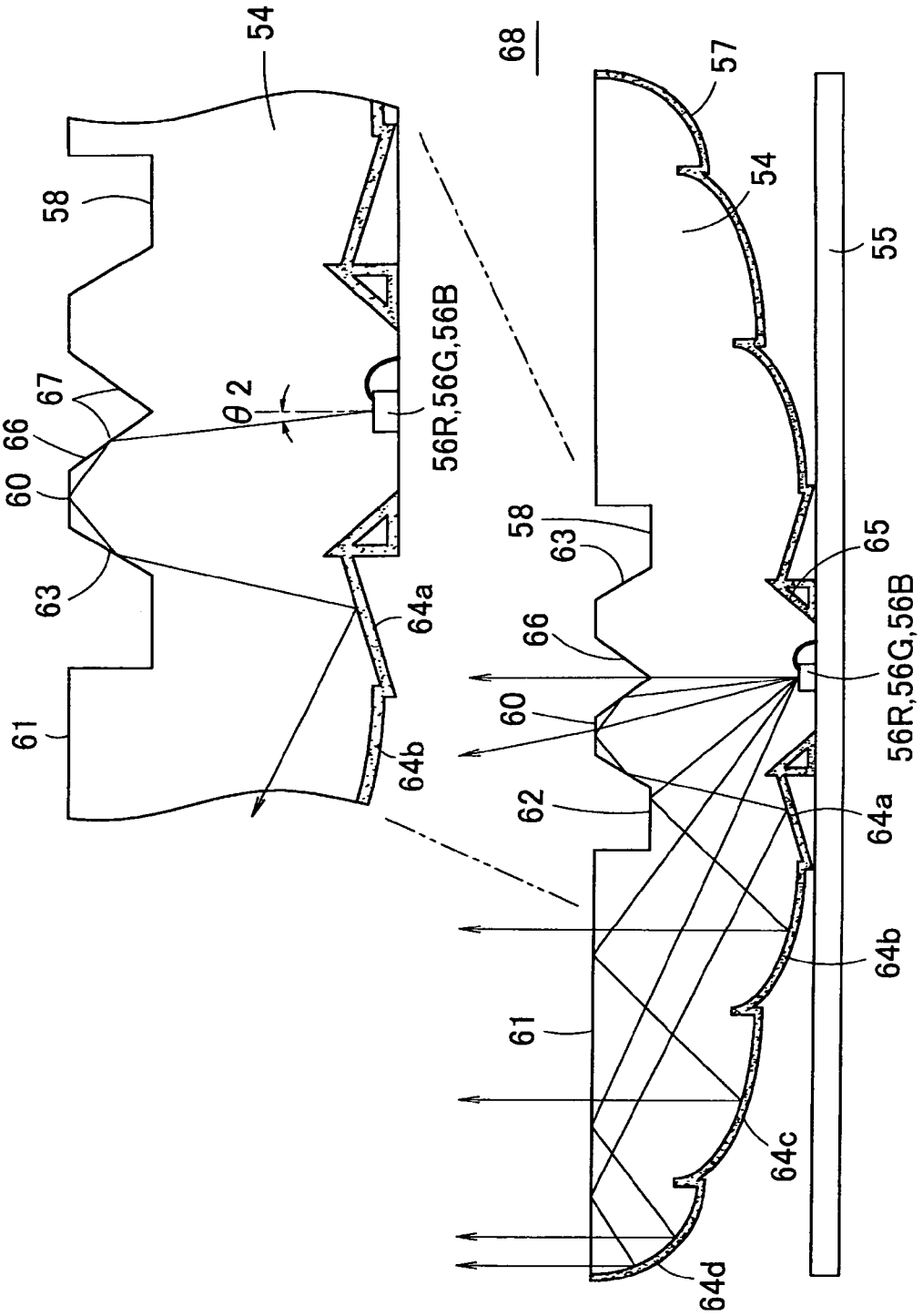
54
58
67
66
60
63
61
θ2
56R,56G,56B
64a
64b
68
57
54
55
58
63
66
60
62
61
65
56R,56G,56B
64a
64b
64c
64d

Fig. 21

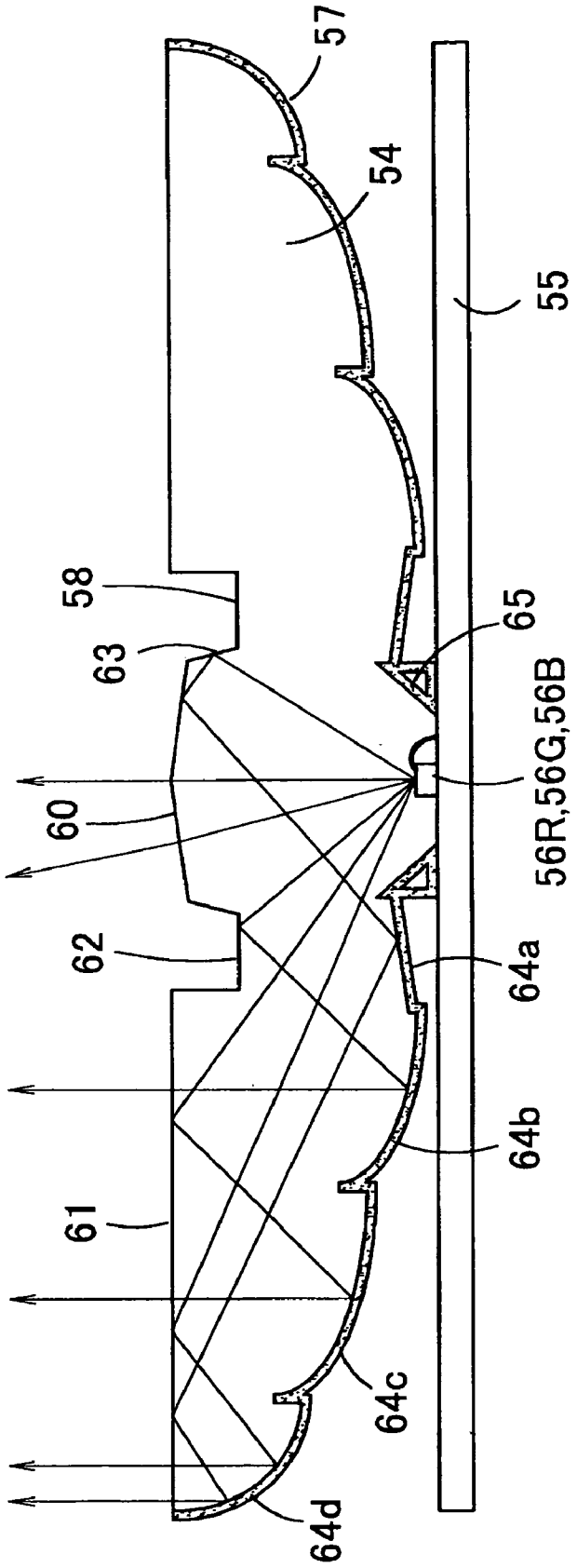

Fig. 22

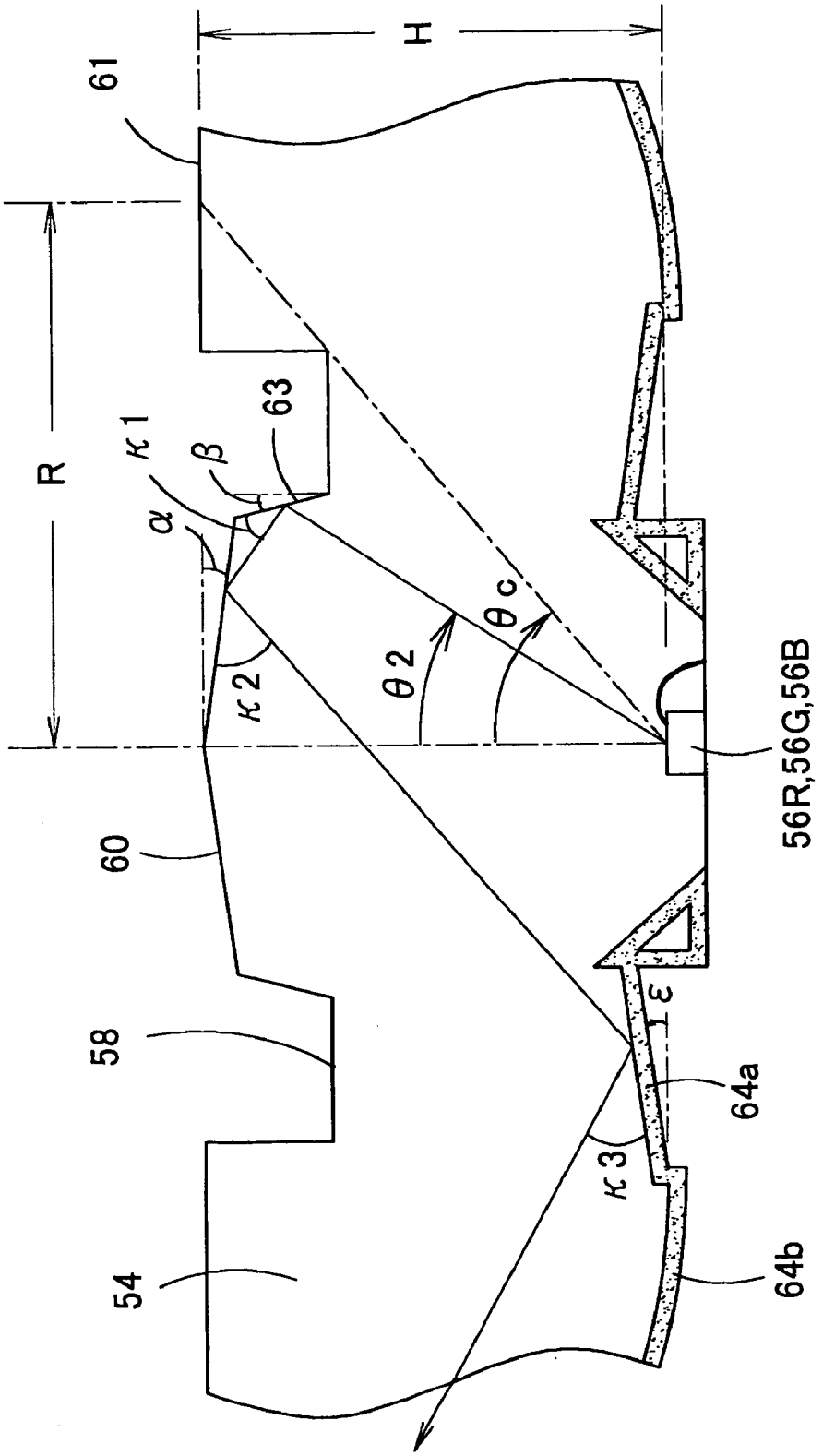

Fig. 23

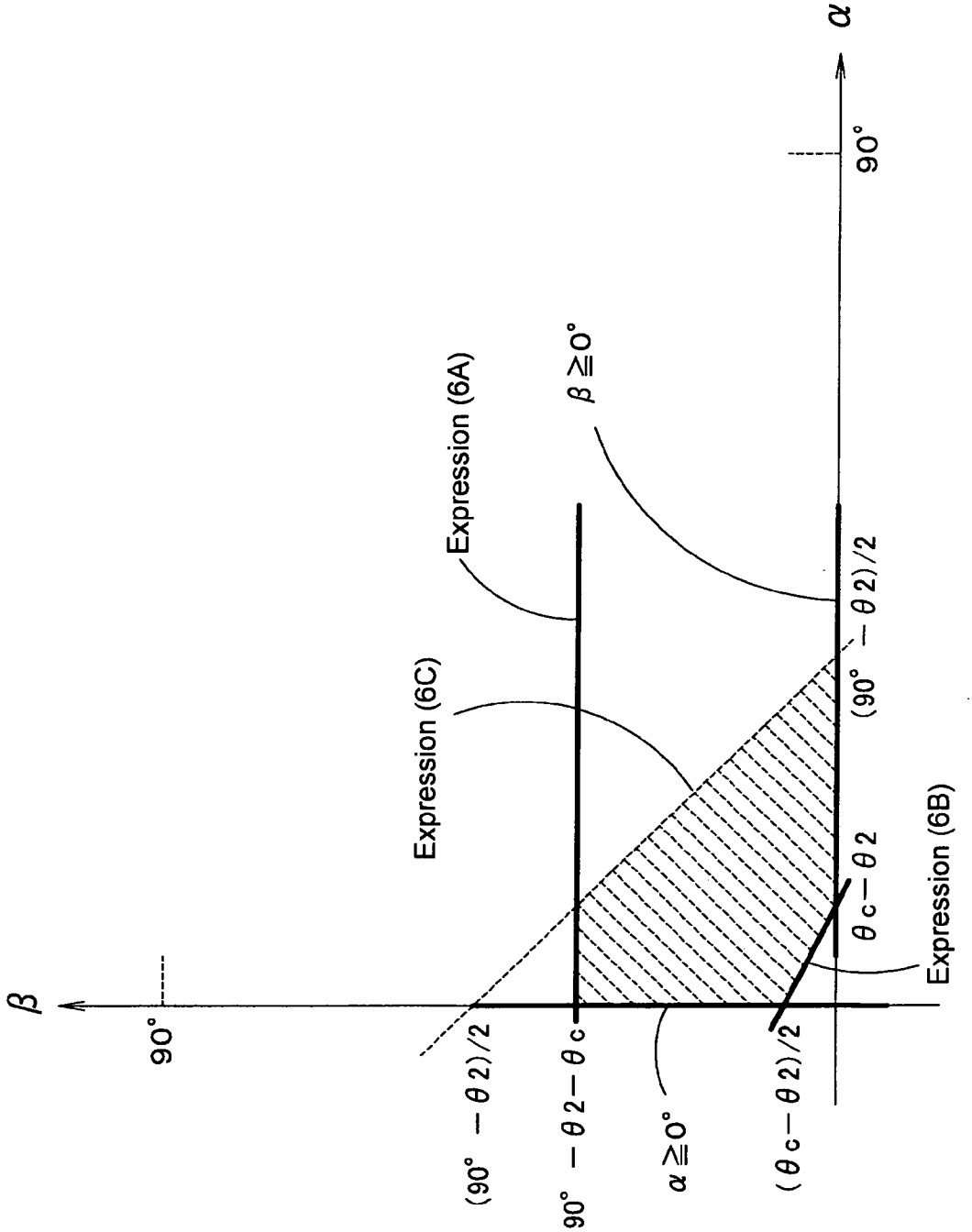
β
90°
(90° − θ2)/2
90° − θ2 − θc
α ≧ 0°
(θc − θ2)/2
θc − θ2
(90° − θ2)/2
β ≧ 0°
Expression (6A)
Expression (6C)
Expression (6B)
α
90°

Fig. 24

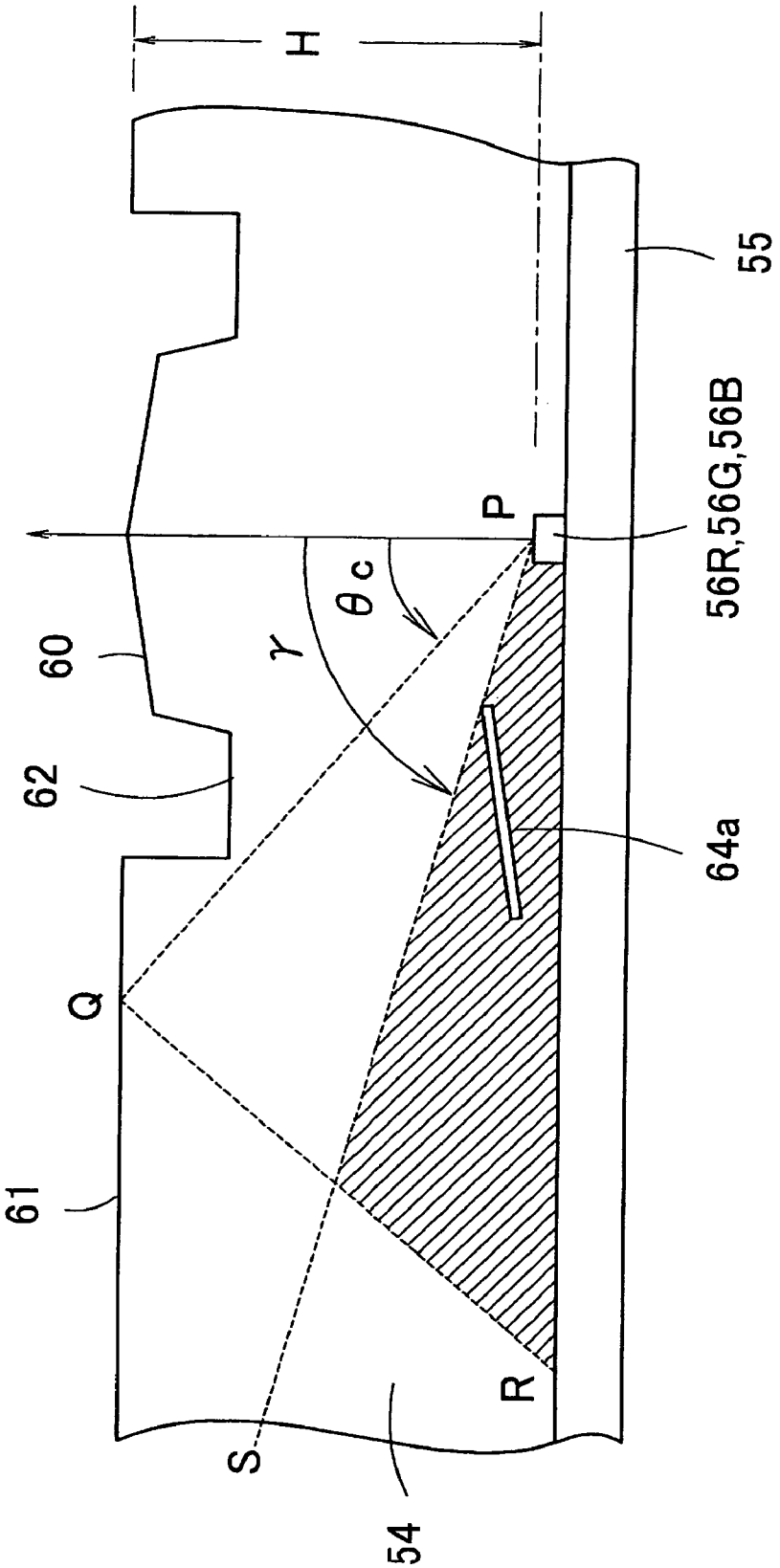

Fig. 25

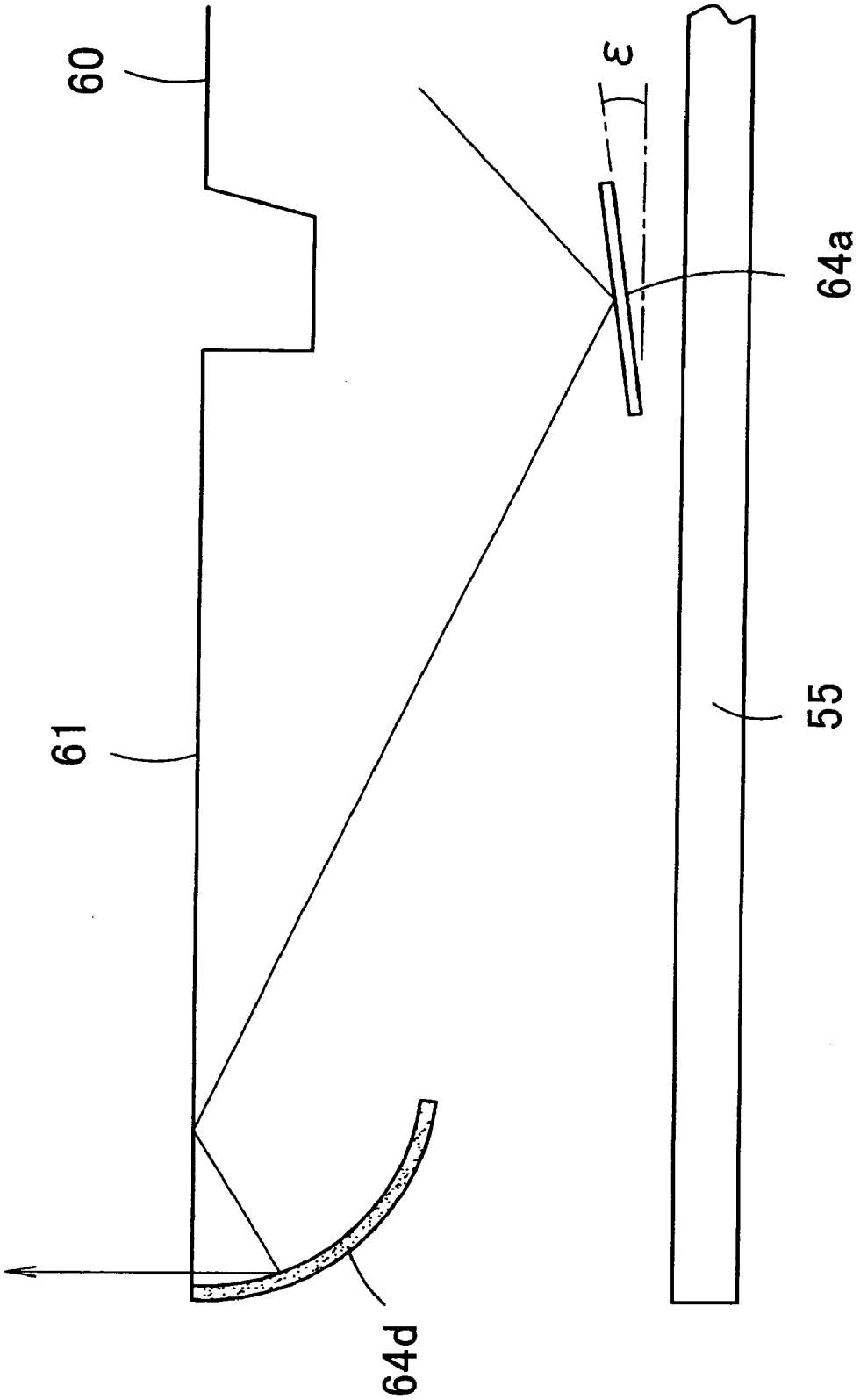

Fig. 26

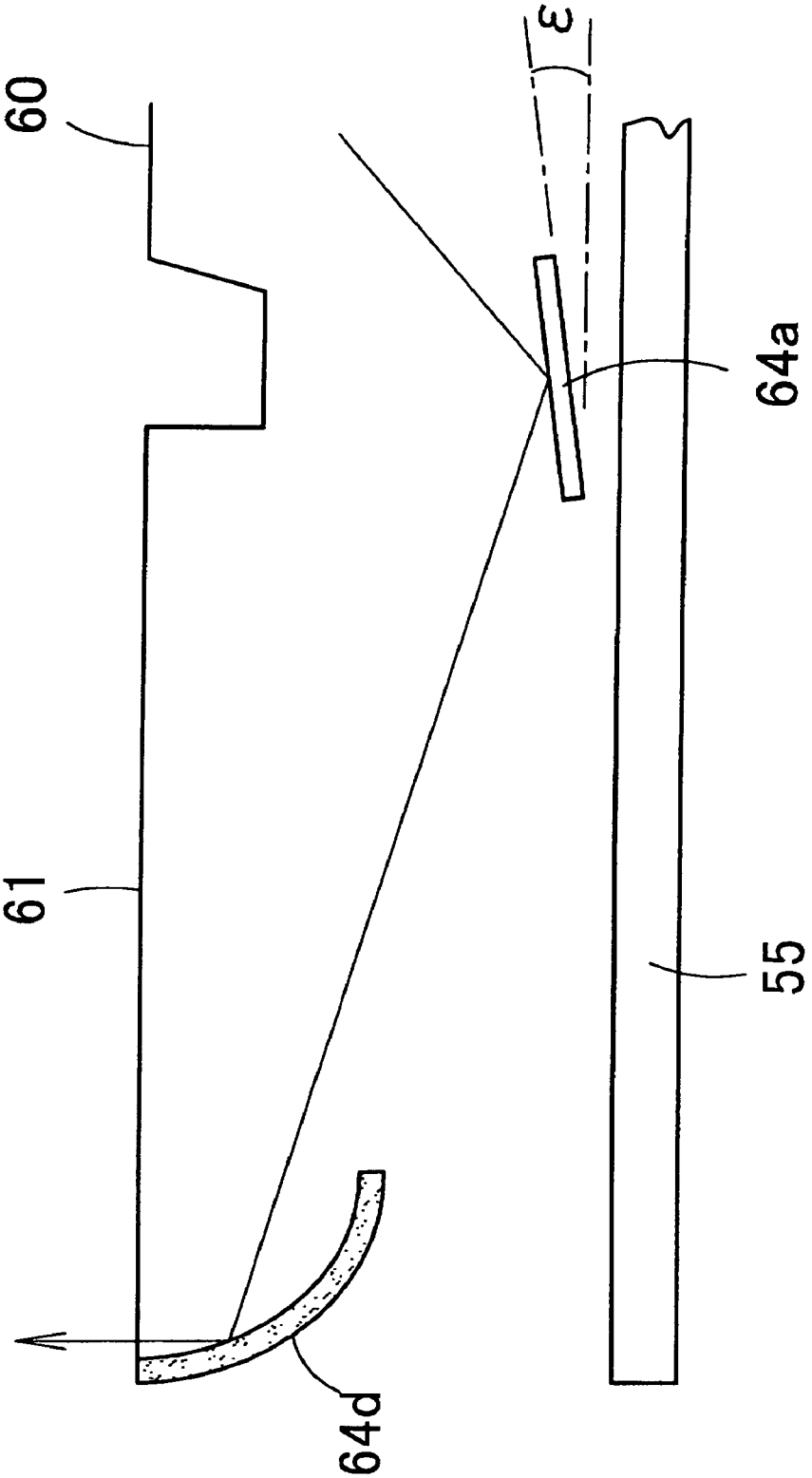

Fig. 27

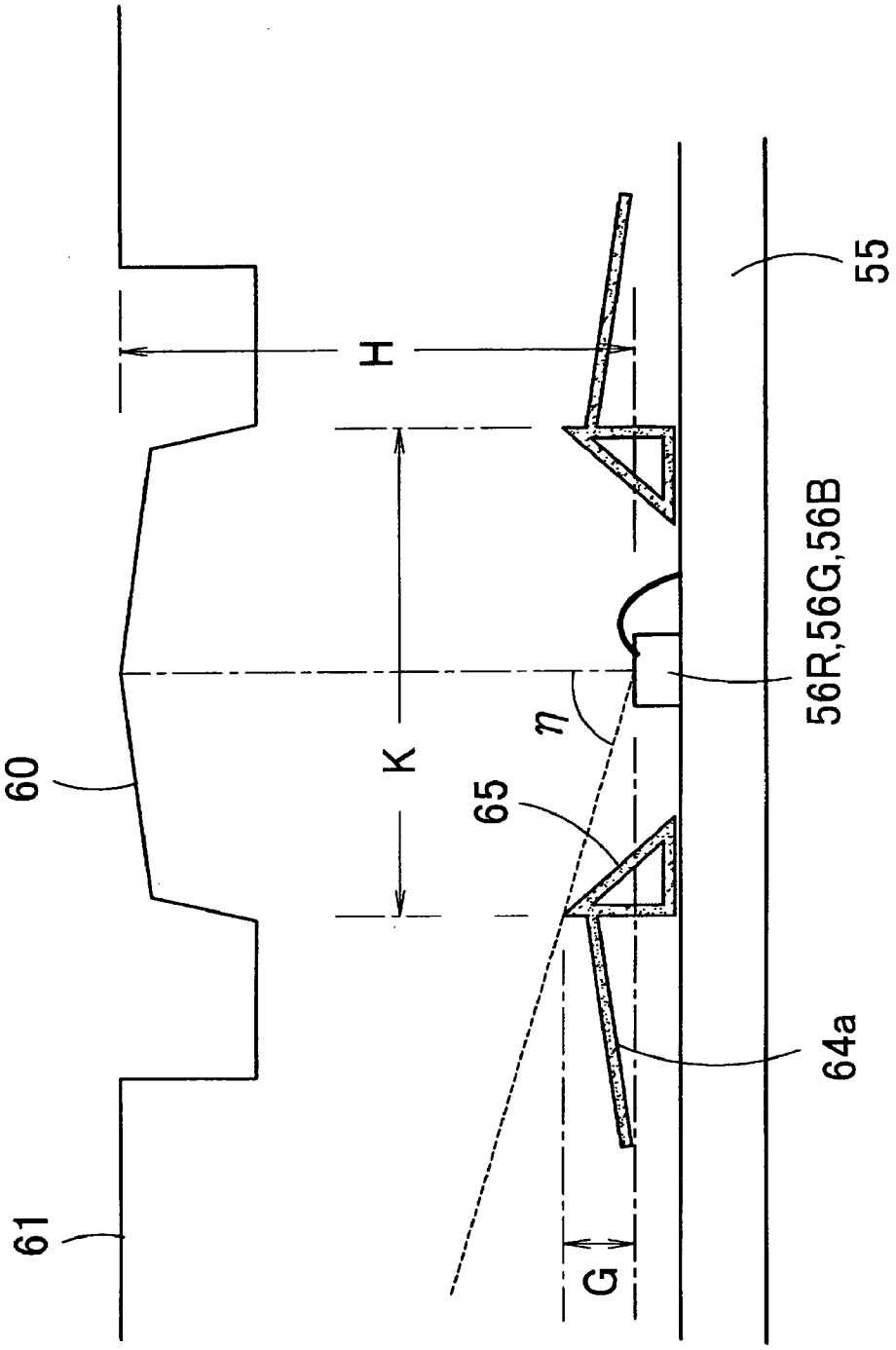

Fig. 28

Fig. 29A

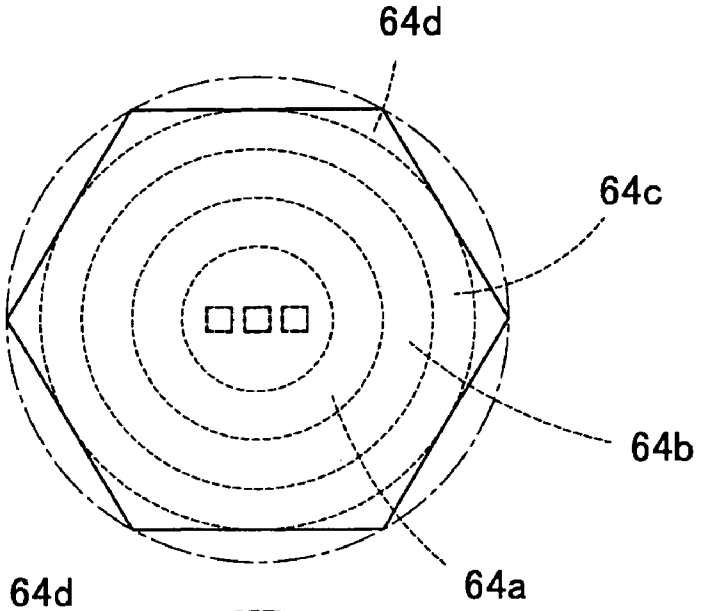

Fig. 29B

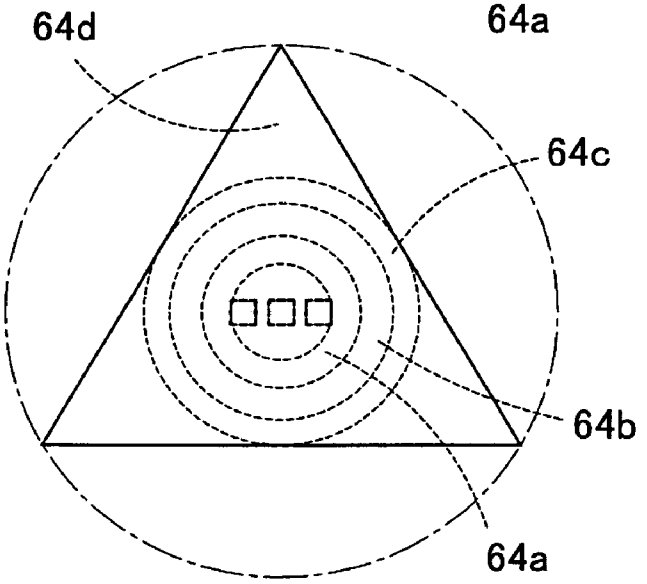

Fig. 29C

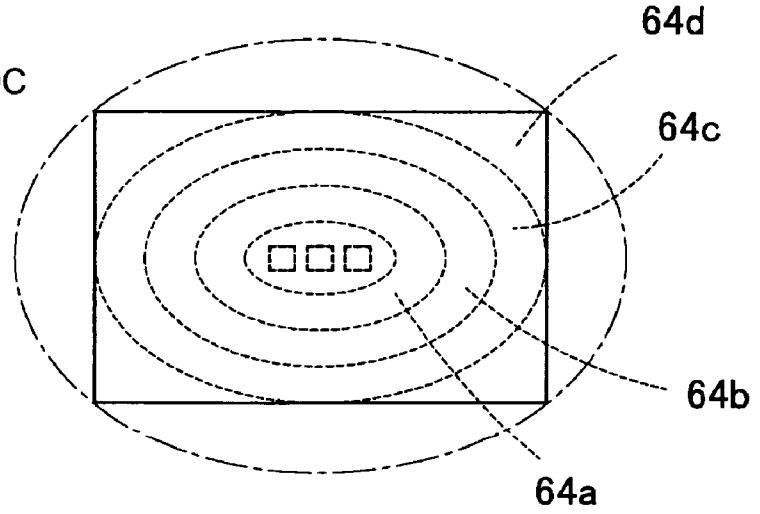

Fig. 30A

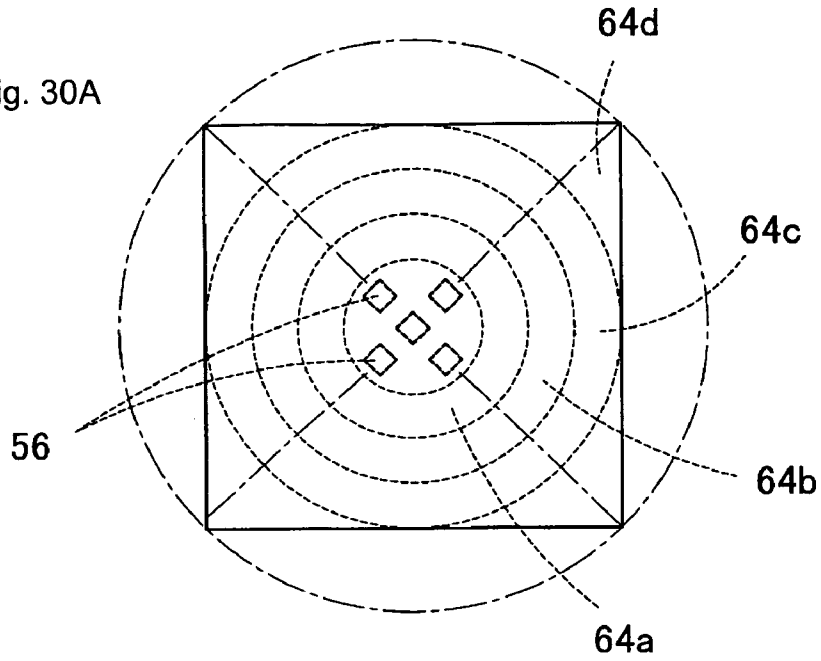

Fig. 30B

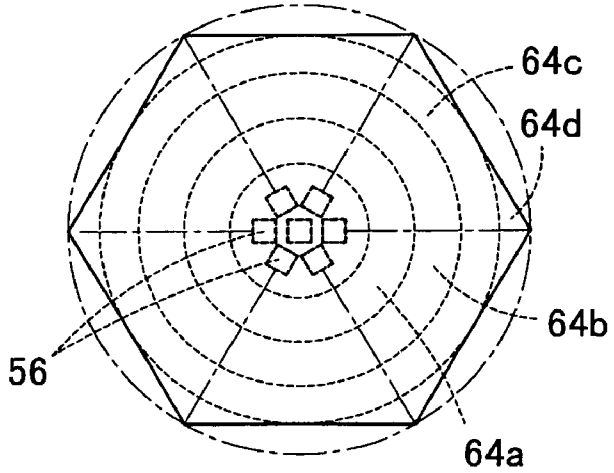

Fig. 30C

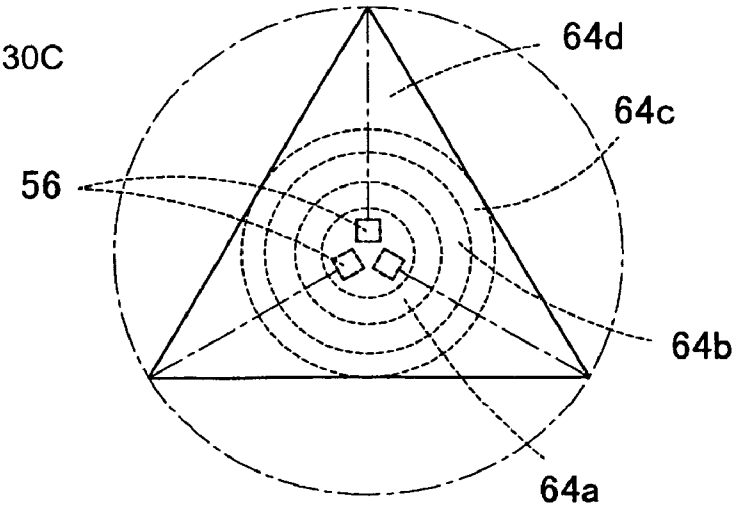

Fig. 31

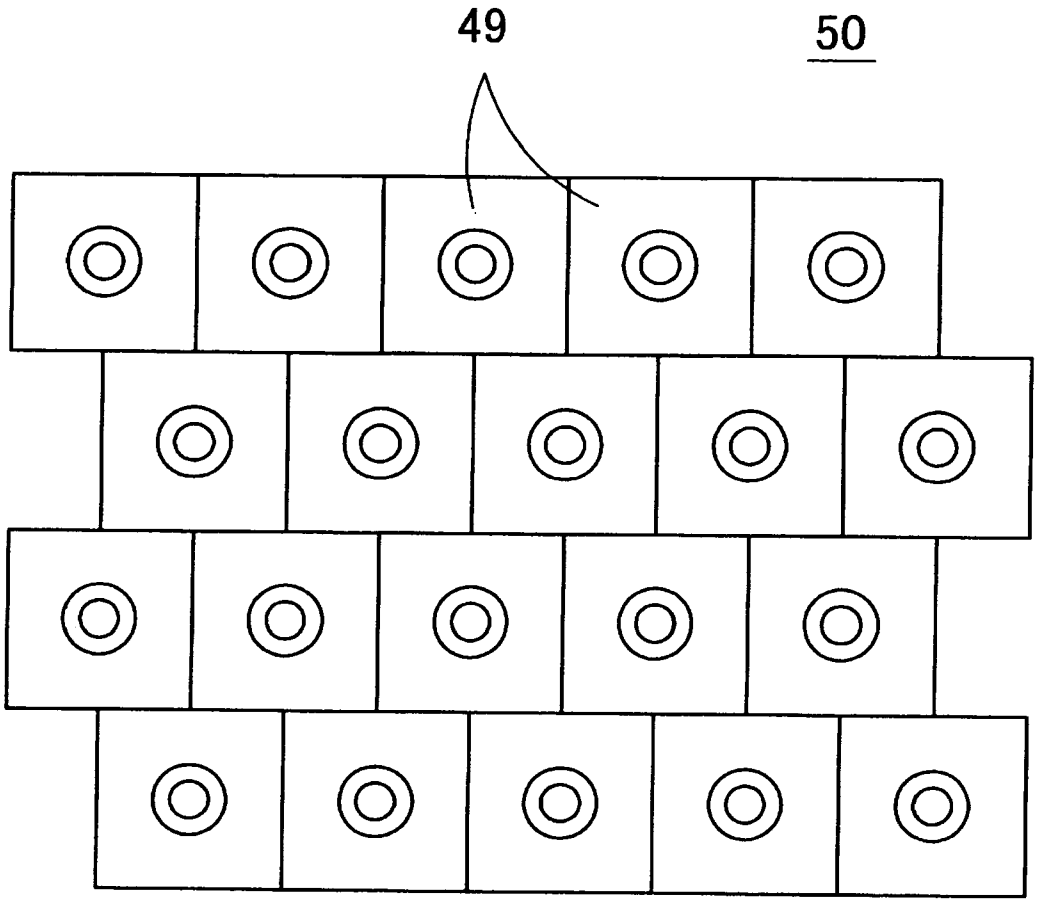

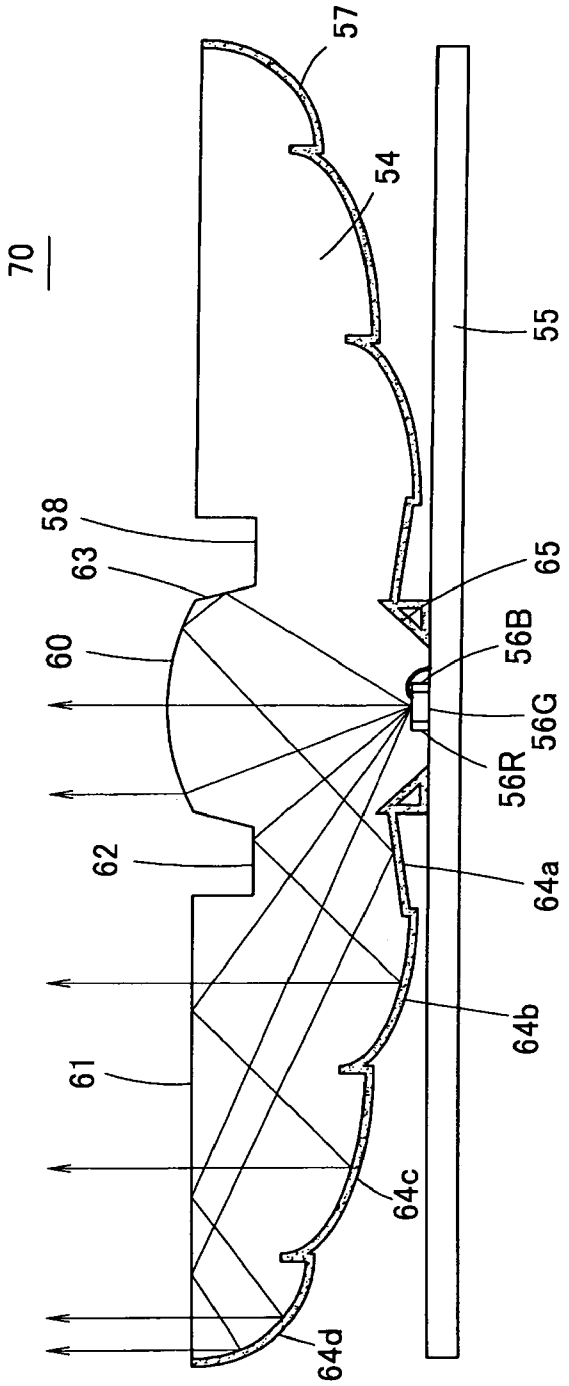

Fig. 32

Fig. 33A

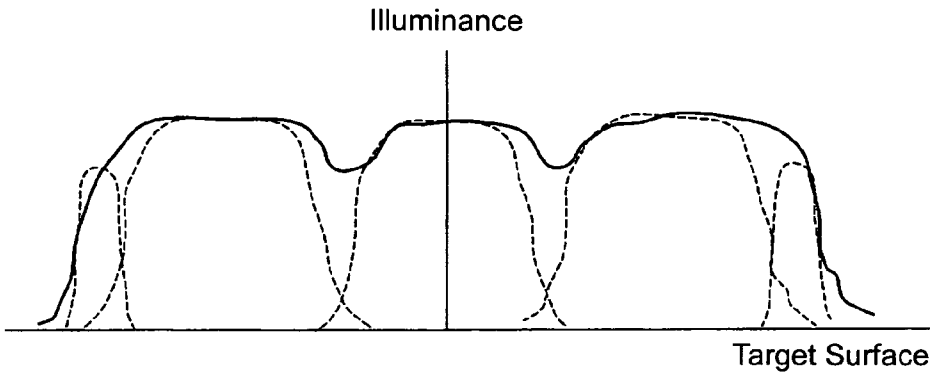

Fig. 33B

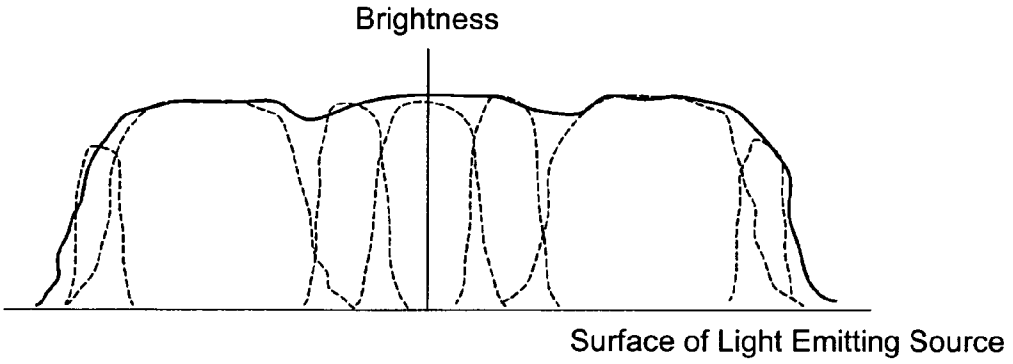

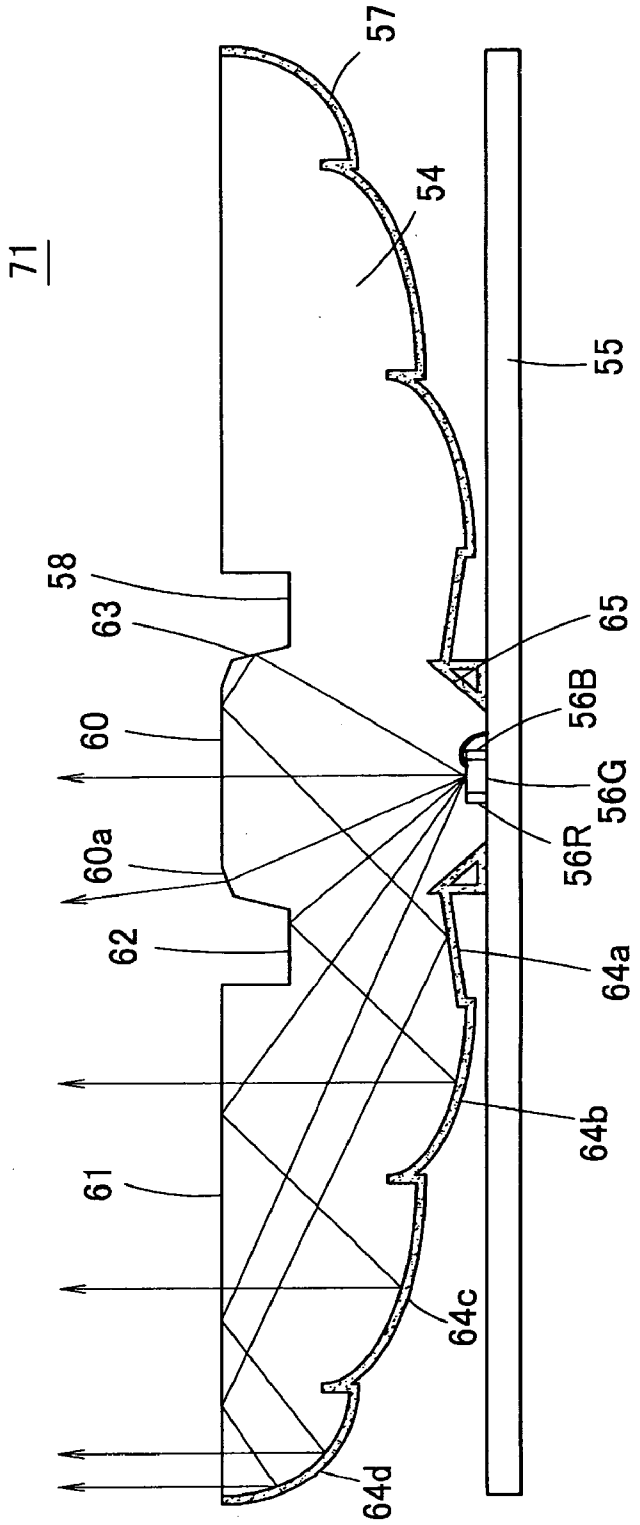

Fig. 34

Fig. 35

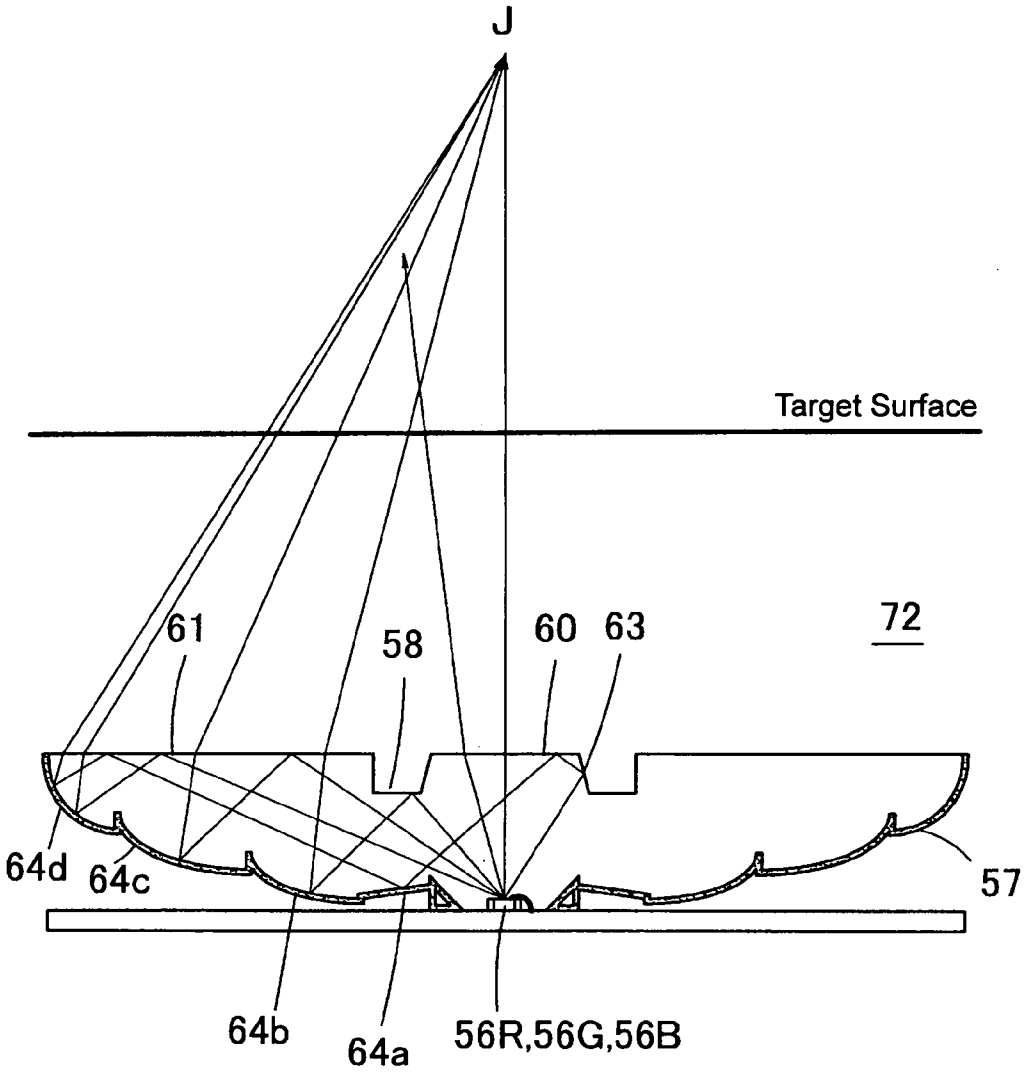

Fig. 36A

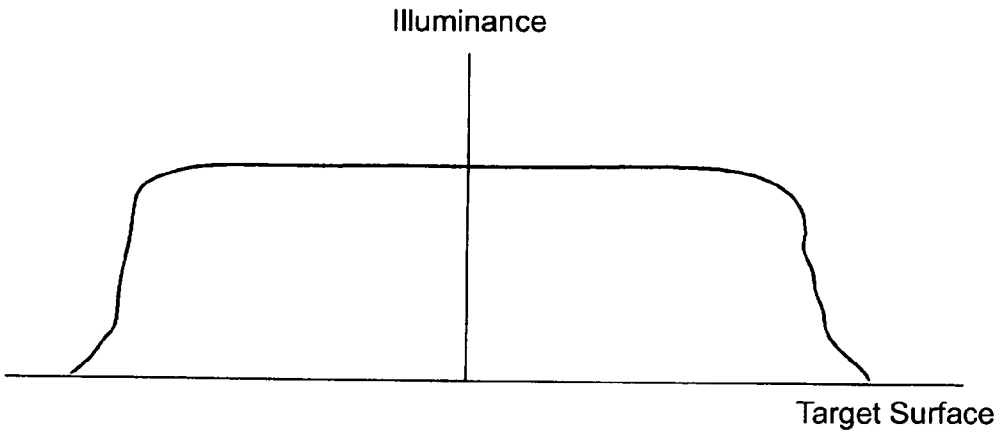

Fig. 36B

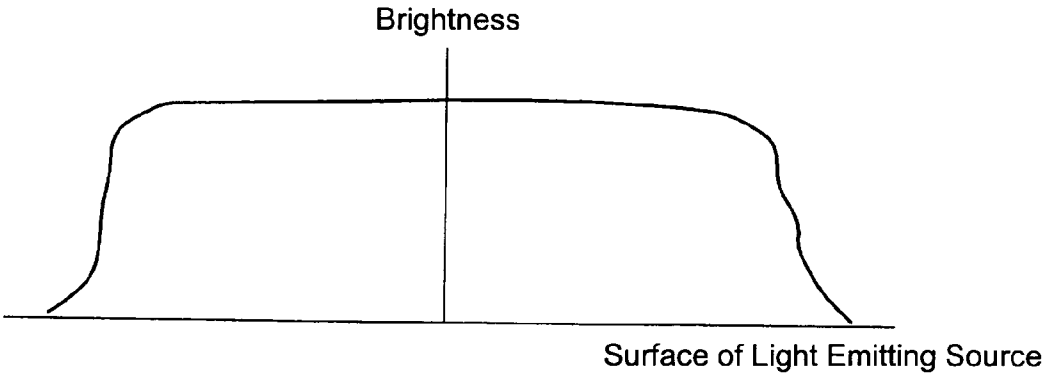

Fig. 37

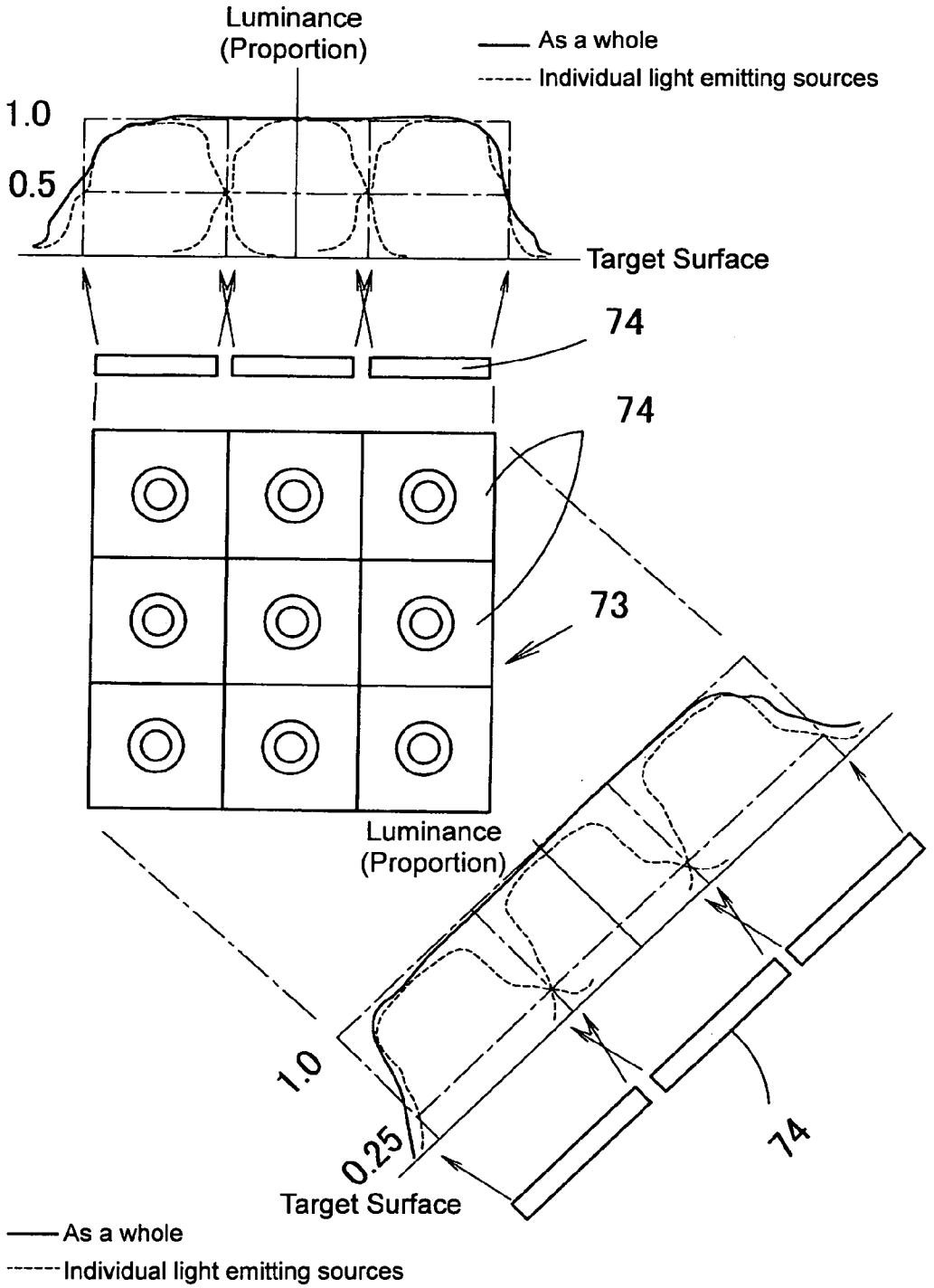
Luminance
(Proportion)
As a whole
Individual light emitting sources
1.0
0.5
Target Surface
74
74
73
Luminance
(Proportion)
1.0
0.25
Target Surface
74
As a whole
Individual light emitting sources

Fig. 38

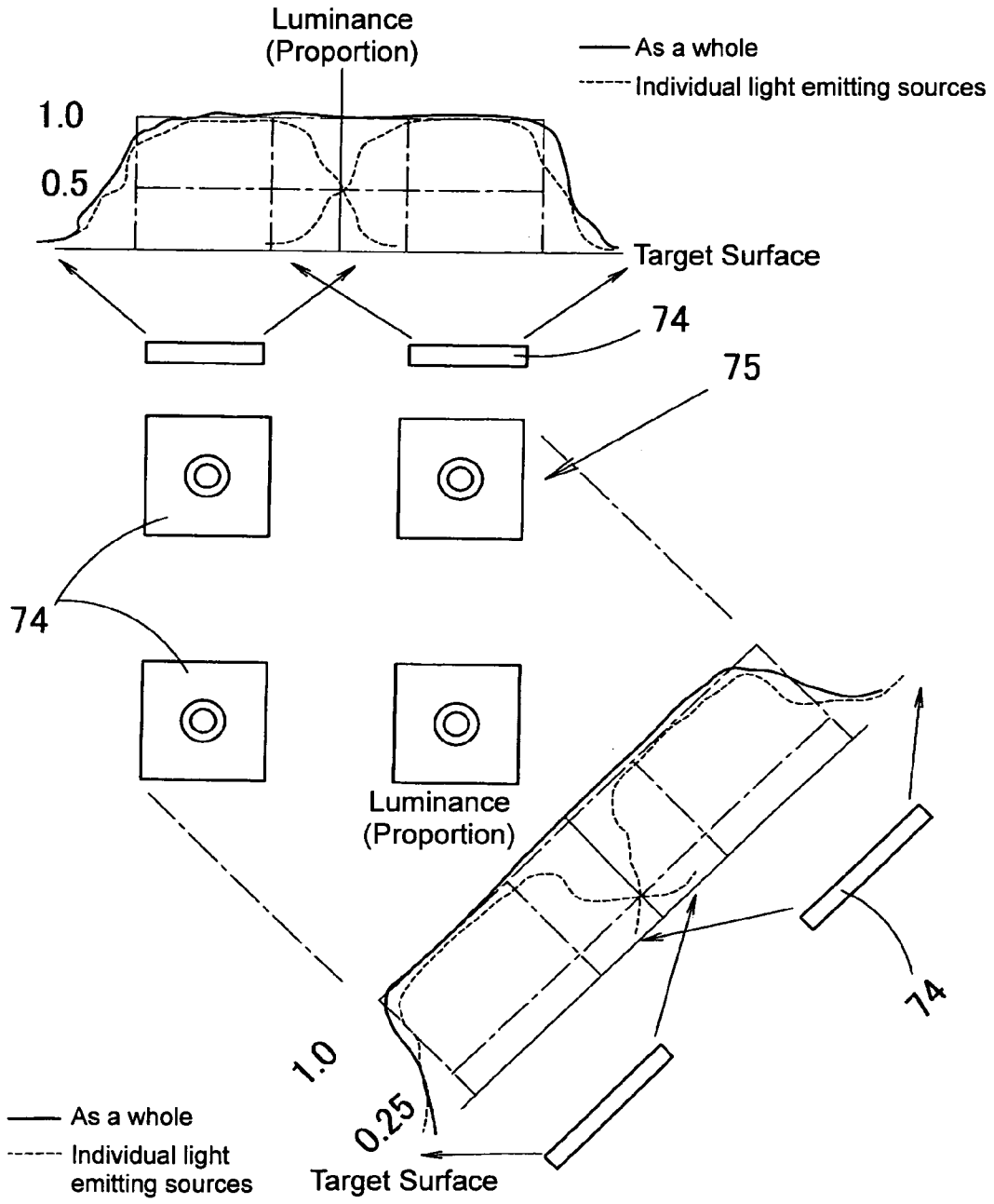
Luminance
(Proportion)
As a whole
Individual light emitting sources
1.0
0.5
Target Surface
74
75
74
Luminance
(Proportion)
74
1.0
0.25
As a whole
Individual light
emitting sources
Target Surface

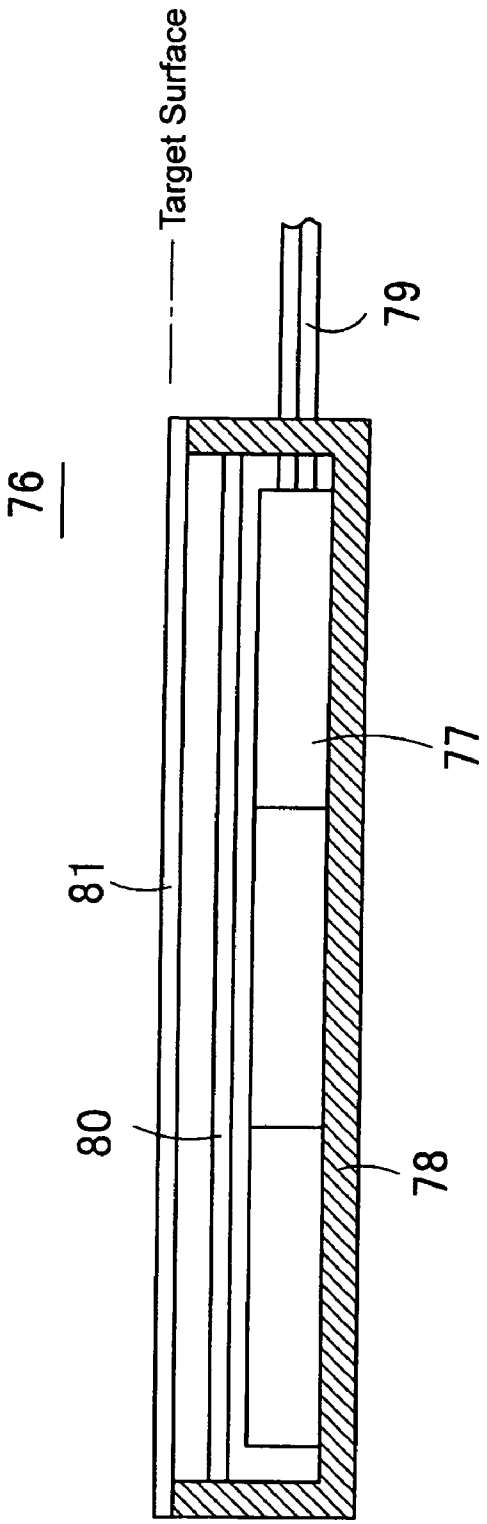

Fig. 39

Fig. 40

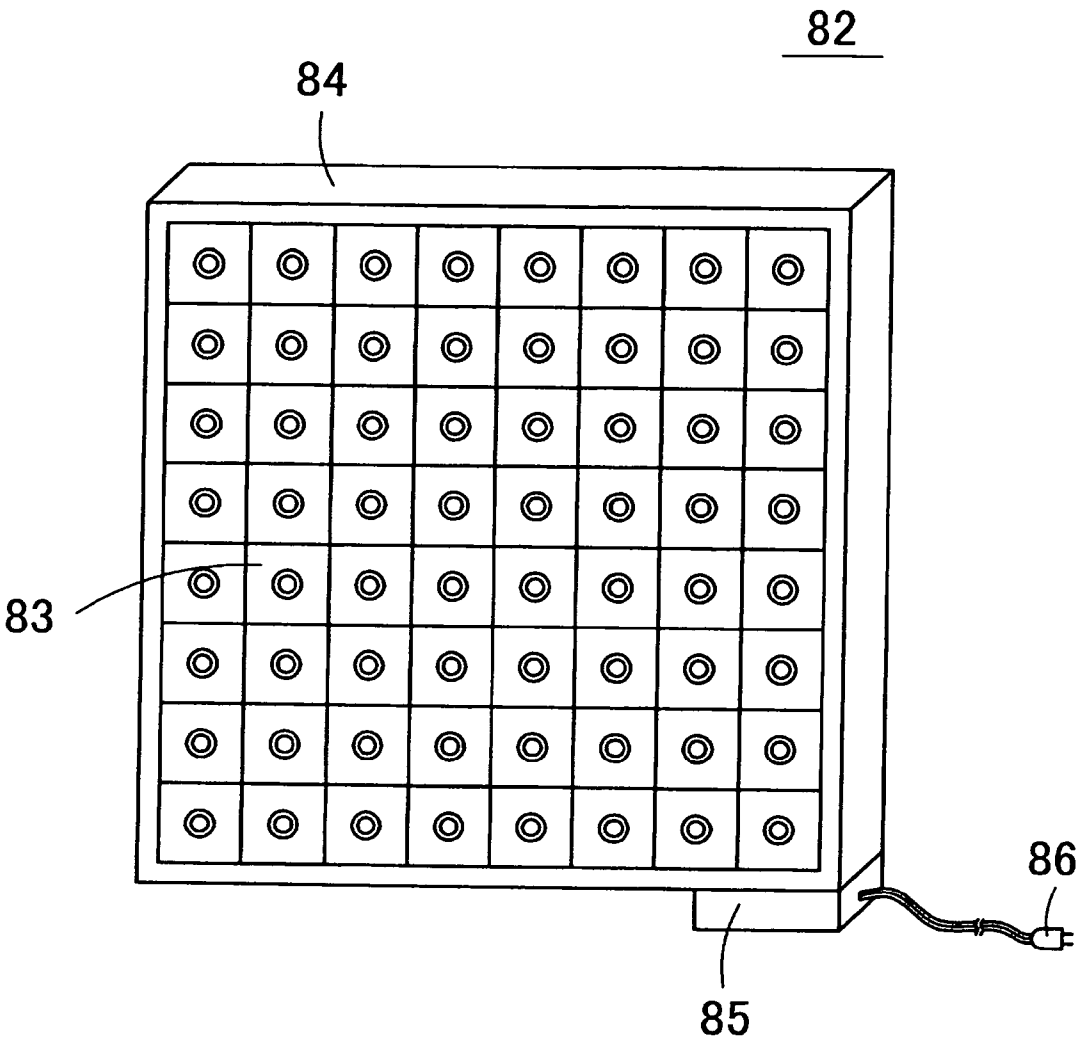

LIGHT EMITTING SOURCE AND A LIGHT EMITTING SOURCE ARRAY

1. FIELD OF THE INVENTION

[0001] The present invention relates to a light emitting source and a light emitting source array. The invention further relates to a lighting system or a liquid crystal display system, etc. that uses a light emitting source array.

2. DESCRIPTION OF THE RELATED ART

[0002] In recent years, as a representative of flat-screen televisions, a liquid crystal display television (LCD television) has gradually come into widespread use. A liquid crystal panel used in LCD televisions generates an image by transmitting or shielding light for every picture element. However, as the liquid crystal panel is not capable of emitting light by itself, it needs to have a backlight (surface light source system). As more of LCD televisions being manufactured are wide-screen type, a backlight for LCD televisions is required to have a large area luminescent surface, and high brightness that is uniform a cross the screen. In the following, we describe a conventional liquid crystal display or a backlight that is use for LCD televisions.

FIRST CONVENTIONAL EXAMPLE

[0003] **FIG. 1** shows a schematic sectional view illustrating the structure of a conventional liquid crystal display. This liquid crystal display **11** is configured with a backlight **13** positioned on the rear of a liquid crystal panel **12**. In the backlight **13**, a light diffusing film **15**, a prism sheet **16**, and a brightness enhancing film **17** are placed on the front face of a plurality of parallel-arranged cold cathode tubes **14**, and the sides and back face of the cold cathode tube **14** are covered by a reflective film **18**. Thus, this liquid crystal display **11** generates a desired image by spatially modulating incident light, wherein the backlight **13** illuminates a whole area of the liquid crystal panel **12** from behind, and controls respective picture elements of the liquid crystal panel **12** to transmit or shield light.

[0004] Since such backlight **13** uses the cold cathode tube **14** as a light source, the backlight can be made thinner. However, there was a disadvantage that when the backlight is used in a color liquid crystal display, three primary colors appear dull, and thus, color reproducibility is poor.

SECOND CONVENTIONAL EXAMPLE

[0005] **FIG. 2** shows a schematic sectional view illustrating a conventional liquid crystal display **19** of another structure. This liquid crystal display uses cannonball type LEDs, **21**R, **21**G, and **21**B that have luminescent colors of red, green and blue as a light source of the backlight **20**. In this backlight **20**, LEDS **21**R, **21**G and **21**B of three colors of red, green and blue form one triplet, and a plurality of triplets of LEDs are arranged at appropriate intervals.

[0006] In such liquid crystal display **19**, not only light of respective colors emitted from respective LEDs **21**R, **21**G, and **21**B are mixed by a space between a surface on which LEDs **21**R, **21**G and **21**B are arranged and the prism sheet **16**, and by the light diffusing film **15**, but also its light intensity and mixed color are uniformed. The light transmitted through the prism sheet **16** transmits through the brightness enhancing film **17** and illuminates the back face of the liquid crystal panel **12**.

[0007] With this backlight **20**, color reproducibility of the liquid crystal display **19** can be improved since the LEDs **21**R, **21**G and **21**B are used as a light source. In particular, the merit of the good color reproducibility is considered to exhibit superiority of the backlight using LEDs of primaries, when compared with a cold cathode tube or white light LED. Hence, it is expected that backlights with an LCD will be mainstream gradually, as the backlight LCD televisions become high-definition.

[0008] At the same time, this backlight **20** suffered from a disadvantage: since three colors are mixed by LEDs **21**R, **21**G, and **21**B of the three colors, the space **24** between the surface on which the LEDs **21**R, **21**G and **21**B are arranged and the prism sheet **16** and for not only mixing the light of three colors but also equalizing the light intensity and the color mixing condition (this space shall be hereinafter referred to an equalizing space) **24** becomes thicker, thus increasing thickness of the backlight **20**.

[0009] For example, suppose the case in which, as shown in **FIG. 3**, by using three cannonball type LEDs, **21**R, **21**G, and **21**B that have an angle of beam spread of 40 degrees, light radiated from these LEDs **21**R, **21**G, and **21**B is uniformly mixed in a circular area with a diameter D=30 mm, and uniform light intensity is obtained. In this specification, we shall mean by uniform light intensity that the fluctuations are within ±10%, and we call as a target surface a surface on which we attempt to obtain uniform light irradiation surface (uniform illuminance) (for example, the position that is a back face of the liquid crystal panel **12**). In this case, to uniformly mix light of three colors on the target surface **22** and illuminate the target surface **22** with uniform light intensity (illuminance), the equalizing space **24** between the surface on which the LEDs **21**R, **21**G, and **21**B are arranged and the prism sheet **16** needs to be L1=75 mm, and a distance between the prism sheet **16** and the target surface **22** should be L2=21 mm. Thus, if we define a distance from the back face of the reflective film **18** to the target surface **22** as thickness of the backlight, and assume that total thickness of a circuit board and the reflective film **18** is L3=4 mm, then thickness of the backlight **20** will be L1+L2+L3=100 mm.

[0010] As the backlight **13** as in the conventional example 1 that uses the cold cathode tube has thickness of approximately 30 mm, thickness of the backlight **20** used in the conventional example 2 will be considerable.

[0011] **FIG. 4A** shows a triplet of LEDs **21**R, **21**G, and **21**B shown in **FIG. 3** arranged at intervals of 30 mm, and **FIG. 4B** shows a distribution of light intensity (illuminance) of the target surface at the time. The target surface **22** shown in solid line in **FIG. 4A** represents the surface spaced at a position of L1+L2=96 mm from the surface on which the LEDs **21**R, **21**G, and **21**B are arranged. The target surface **23** shown in broken line in **FIG. 4A** represents the target surface that is brought much closer to the LEDs **21**R, **21**G, and **21**B than the target surface **22** in solid line. In the case of the target surface **22** shown in solid line, light uniformly spreads in the area with the diameter of 30 mm on the target surface **22**, as illustrated in **FIG. 3**. Thus, on the target surface **22**, uniformly distributed light intensity can be achieved across the whole area, as shown in solid line in

FIG. 4B. Correspondingly, at the position of a target surface **23** as shown in broken line in **FIG. 4A**, the light intensity widely fluctuates and cannot be uniform, as illustrated by the light intensity distribution in **FIG. 4B**.

[**0012**] In the backlight **20** as used in the conventional example 2, we would have to increase the number of LEDs **21**R, **21**G, and **21**B to produce increased density of the arrangement as shown in **FIGS. 5A** and B if we attempted to bring the target surface **23** close to the LEDs **21**R, **21**G, and **21**B and equalize the light intensity on the target surface **23**. Then, in this case, there was a problem that a number of LEDs **21**R, **21**G, and **21**B were required, which is not only costly but also increases power consumption. In addition, although it seems that the number of LEDs could be decreased if LEDs of a wider angle of beam spread were used, even use of LEDs with the wider angle of beam spread could hardly decrease the number of LEDs because luminous efficiency was poor.

[**0013**] As such, in the conventional example 2, a backlight that is thinner, could achieve uniform distribution of light intensity and color mixing, and had low power consumption could not be made, and thus any of the above (features) must be given up.

CONVENTIONAL EXAMPLE 3

[**0014**] **FIG. 6** shows a schematic cross sectional view illustrating the structure of a conventional backlight of yet another structure. In this backlight **25**, a plurality of light emitting sources **27** are incorporated in the board **26**, optical elements **28** in the form of Fresnel concave lens as shown in **FIG. 7** are arranged in front of the respective light emitting sources **27**, and an optical waveguide **29** is positioned in front of these as a whole. Then, the backlight is configured to diffuse light emitted from the LED chips of respective colors within respective light emitting sources **27** with the optical elements **28** by spreading it over the whole area of the optical waveguide **29**, and to have the light transmit through the optical waveguide **29**, thus emitting onto the liquid crystal panel, etc. the light whose viewing angle is narrowed.

[**0015**] Even in the backlight **25** of such structure, use of LED chips of three primary colors can make color reproducibility better when it is used for a liquid crystal display.

[**0016**] However, even with such backlight **25**, uniformly mixing light of respective colors emanating from the light emitting sources **27** would be difficult. Thus, light of respective colors must be uniformly mixed by the space between the optical elements **28** and the optical waveguide **29**, and in doing so, sufficient optical path length in the equalizing space should be kept, which considerably increases thickness of the space between the optical element **28** and the optical waveguide **29**.

[**0017**] To be specific, in this backlight **25**, on the target surface **23** as shown in **FIG. 8A** that is close to the light emitting source **27**, light intensity cannot be uniform as shown in broken line in **FIG. 8B**. Thus, if we attempted to achieve the uniform light intensity distribution as shown in the solid line in **FIG. 8B**, the target surface **22** should be sufficiently spaced from the light emitting source **27**, as shown by the target surface **22** in solid line in **FIG. 8A**. Then, in the backlight **25**, it had thickness of approximately 70 mm and it was difficult to make it thinner. In addition, in this backlight **25**, if we attempted to achieve uniform brightness distribution on the target surface, the number of the light emitting sources **27** would increase.

SUMMARY OF THE INVENTION

[**0018**] As described above, in the conventional backlights, the backlight using LEDs of three colors, namely, red, green, and blue were good in color reproducibility. However, in the backlight using the LEDs of three colors, the equalizing space expanded, which forced us to give up any of thickness, uniformity, and power consumption, and did not allow us to create a backlight that is thinner, and has uniform light intensity distribution and color mixing as well as low power consumption.

[**0019**] One or more embodiments of the present invention lies (lie) in provision of a light emitting source array using light emitting device, such as LED, etc. that has uniform light intensity (illuminance) on an illuminated surface (when a plurality of light emitting devices are included, in particular, color mixing should be uniform), is thinner, and has low power consumption. It further lies in provision of a light emitting source for use in the light emitting source array, a lighting system or a liquid crystal display system that is used in the light emitting source array.

[**0020**] In accordance with one aspect of the present invention, a light emitting source comprises a reflecting member for reflecting light, a light guiding unit arranged on the light reflecting surface of the reflecting member, and a light emitting device for emitting light to the light guiding unit, wherein it is characterized in that the light emitting device is arranged on the optical axis of the reflecting member, the light guiding unit has a light irradiation surface that externally emits light outputted from the light emitting device and light of the light emitting device that is reflected by the reflecting member, wherein a part of the light irradiation surface is formed in such a shape that light emitted from the light emitting device at a predetermined angle from the optical axis is total reflected and oriented in the direction of the reflecting member, and wherein the reflecting member has a backward slope area, in part, that reflects the light total reflected in a part of light irradiation surface of the light guiding unit in the direction progressively away from the optical axis, and orients it to the periphery of the light guiding unit spaced from the optical axis.

[**0021**] In this light emitting source, since light outputted from the light emitting device at a predetermined angle with the optical axis can be total reflected in a part of the light irradiation surface and oriented in the direction of the reflecting member, and this light can be reflected to the direction being progressively away from the backward slope area provided on the reflecting member, and oriented toward the periphery of the light guiding unit away from the optical axis, light outputted at a predetermined output angle from light emitting device can be outputted from the periphery of the light emitting source. Thus, the light emitting source does not darken easily in the periphery of the light emitting source and brightness of the light emitting source can be further equalized. In addition, because brightness distribution of the light emitting source is equalized, the light emitting source can be made thinner. Furthermore, if light emitting devices with luminous colors of red, blue, and

green were used as a light emitting source, they would be better in color reproducibility and could uniformly mix colors even though they had decreased thickness when they are used in the liquid crystal display system.

[0022] In an embodiment of the present invention, as the backward slope area of the reflecting member is oriented in the peripheral direction, it is angularly inclined to the opposite side to the light irradiation surface of the light guiding unit. Provision of the backward slope surface having such inclination allows the light at predetermined output angle that was total reflected on the part of the light irradiation surface of the light guiding unit to be reflected toward the periphery of the light guiding unit.

[0023] An embodiment of the present invention is arranged to guide the light reflected at the backward slope area to the periphery of the reflecting member by total reflecting it at the light irradiation surface of said light guiding unit. In the embodiment, as the light that was reflected at the backward slope area is guided to the periphery of the reflecting member after being total reflected at the light irradiation surface of the light guiding unit, the degree of freedom of the optical path of light will be high and degree of freedom in designing of the reflecting member will be high.

[0024] An embodiment of the present invention is arranged to guide the light reflected at the backward slope area directly into the reflecting member. According to such the embodiment, loss of light to be guided to the periphery of the reflecting member could be smaller.

[0025] In an embodiment of the present invention, the light emitting device is comprised of more than one light emitting diode having different luminous colors. According to the embodiment, when it is used in a color liquid crystal display system, it can improve color reproducibility of the screen of the liquid crystal display system. In addition, in the present invention, optical path length can be saved within the light guiding unit of the light emitting source, light mixing performance of respective colors outputted from respective light emitting diodes is better, and thickness of the space for equalizing light intensity or color mixing state necessary outside of the light emitting source can be made thinner.

[0026] When viewed from a front view, an embodiment of the present invention has a square, rectangular, regular hexagonal or regular triangle outline. With the embodiment, the light emitting sources can be closely arranged, thereby not only producing a light emitting source array of high brightness, but also achieving uniform light emission.

[0027] When viewed from a front view, an embodiment of the present invention has a circular or elliptical outline. With the embodiment, a light emitting source array with a space therebetween can be produced, thereby saving power of the light emitting source. In addition, as there is no need of cutting to shape the light emitting sources, manufacturing of the light emitting sources will be facilitated. Furthermore, as there is no corner part in the light emitting sources of such a shape, designing of the light emitting source will be easy.

[0028] In accordance with one aspect of the present invention, a light emitting source is characterized in that it comprises a reflecting member for reflecting light, a light guiding unit arranged on the light reflecting surface of the reflecting member, and a light emitting device for emitting light toward the light guiding unit, wherein a light irradiation surface of the light guiding unit has a first region that transmits light emanating from the light emitting device and outputs to the external of the light guiding unit, a second region that orients the light emanating from the light emitting device to the reflecting member by total reflection and transmits the light reflected at the reflecting member and outputs it to the external of the light guiding unit, and a third region whose shape is defined so that it total reflects with the first region the light that made a predetermined angle with the optical axis and was outputted from the light emitting device, orients it to the reflecting member, and outputs the light reflected at the reflecting member to the external of the light guiding unit.

[0029] With the light emitting source, the entire light irradiation surface of the light emitting source can be made uniformly luminous, by not only having light from the light emitting device directly outputted from the first region, but also having the light emanating from the light emitting device total reflected at the second region, reflected at the reflecting member, and outputted to the external from the second region. Furthermore, since the light outputted from the light emitting device enters the reflecting member by total reflecting it in the first and third regions and then the light reflected at the reflecting member is outputted to the external, light having a small output angle from the light emitting device and high optical intensity can be outputted. In addition, since the optical path length can be saved in the light guiding unit of the light emitting source, the color mixing performance of respective colors outputted from respective light emitting device will be better when light emitting devices of a plurality of luminous colors are used, and the space for equalizing the light intensity needed in the external of the light emitting source or color mixing state can be smaller.

[0030] An embodiment of the present invention is arranged to provide a channel between the first region and the second region on the light irradiation surface of the light guiding unit, form the third region on an inclined side of the inner circumference side of the channel, and total reflect the light outputted from the light emitting device in the third region, then total reflect it in the first region to orient it toward the reflecting member.

[0031] An embodiment of the present invention is arranged not only to provide a channel between the first region and the second region on the light irradiation surface of the light guiding unit but also to form a conical depression on the first region, thus forming the third region on the inclined side of the inner circumference side of the channel and on the side of the depression. Then, it total reflects the light outputted from the light emitting source in the third region of the depression, then total reflects it in the first region, and yet total reflects it in the third region of the channel side, so as to guide it to the reflecting member.

[0032] An embodiment of the present invention arranges the third region so that the light outputted from the light emitting device at an output angle smaller than a critical angle of the total reflection on the interface of the light guiding unit is total reflected in the third region, and guided to the reflecting member.

[0033] In an embodiment of the present invention, the first region protrudes more to the light outputting side than its

surrounding are a does, and the peripheral line of the first region is chamfered. With the embodiment, since light outputted from the edge of the first region can be focused on the front, distribution of illuminance on the predetermined target surface can be equalized.

[0034] An embodiment of the present invention comprises the first region by curved surfaces. With the embodiment, as light outputted from the entire first region can be focused on the front, distribution of illuminance on the predetermined target surface can be further equalized.

[0035] An embodiment of the present invention makes the configuration of the reflecting member so that light outputted from the light irradiation surface after being total reflected at the reflecting member will converge. With the embodiment, as the light outputted from the light emitting source can be focused on the front, distribution of illuminance on the predetermined target surface can be better equalized.

[0036] An embodiment of the present invention provides a member for limiting an output angle of light outputted from the light emitting device in the periphery of the light emitting device. With the embodiment, an output angle of light outputted from the light emitting device can be limited, thus preventing light outputted at a large output angle from entering the light emitting source that are adjacently arranged and becoming stray light.

[0037] In accordance with one aspect of the present invention, the light emitting source array is characterized in that it is comprised of an arrangement of a plurality of the light emitting devices. With the embodiment, a large light emitting source array of uniform light intensity distribution can be made. Yet, as brightness of respective light emitting devices is equalized, illuminance on a target surface can be equalized even though the target surface is close. Hence, if this light emitting source array is used as a backlight, etc. of a liquid crystal display system, a light emitting source array that has decreased thickness and uniform light intensity distribution can be made. In addition, it can have smaller power consumption than a backlight using cannonball type LEDs. In addition, since respective light emitting sources are modularized as the surface light source in such the light emitting source, no design change to an external optical system such as a diffusing plate, etc. is necessary when size or shape (fitness ratio) is modified, and rearrangement of the light sources should suffice. Thus, it will be a light emitting source array having high degree of freedom in resizing.

[0038] In an embodiment of the present invention, as the light emitting sources are closely arranged, brightness of the light emitting source array is high and uniformity of brightness is high.

[0039] In an embodiment of the present invention, as the light emitting sources are arranged with a space therebetween, the number of necessary light emitting sources can be smaller, thereby achieving power saving.

[0040] In accordance with one aspect of the present invention, in a method of setting optical path length of light to be outputted from the light emitting source comprising a reflecting member for reflecting light, a light guiding unit arranged on the side of the light reflecting surface of the reflecting member, and light emitting devices for outputting light toward the light guiding unit, the method of setting the optical path length of the light outputted from the light emitting source is characterized in that said light emitting devices are arranged on an optical axis of the reflecting member, that a surface of the light guiding unit outputs to the external the light outputted from the light emitting device and the light of the light emitting device reflected at the reflecting member, that a part of the surface of the light guiding unit, after total reflecting the light outputted from the light emitting devices, total reflects it with another part of the surface of the light guiding unit and orients it to the reflecting member, and that shapes of and a positional relationship among the reflecting member, the light guiding unit, and the light emitting device are such defined that the part of the reflecting member reflects the light total reflected by the part of the light irradiation surface to the direction being gradually away from the optical axis and orients it to the periphery of the light guiding unit away from the optical axis.

[0041] As we described the light emitting sources of the present invention, with the method of setting optical path, the light emitting sources do not darken easily in the periphery of the light emitting sources, and brightness of the light emitting sources can be further equalized. In addition, as the brightness distribution of the light emitting sources becomes uniform, an equipment with this light emitting source can be made thinner. Furthermore, if more than one element with different luminous colors is used in a light source unit, and when it is used in a liquid crystal display system, color reproducibility can be improved, and color can be mixed uniformly even though thickness is decreased.

[0042] In accordance with one aspect of the present invention, in light emitting sources comprising a reflecting member for reflecting light, a light guiding unit arranged on the side of a light reflecting surface of the reflecting member, and light emitting devices for outputting light to the light guiding unit, a method of outputting light to be output from light emitting sources is characterized in that the light emitting devices are arranged on an optimal axis of the reflecting member, that a part of the light guiding unit outputs light outputted from the light emitting device to the external, while after another part of the surface of the light guiding unit total reflects the light outputted from the light emitting device, a still further part of the surface of the light guiding unit total reflects it and orients it toward the reflecting member, that the part of the reflecting member reflects the light total reflected by the light irradiation surface of the light guiding unit to the direction being gradually away from the optical axis, and orients it to the periphery of the light guiding unit away from the optical axis, and that shapes of and a positional relationship among the reflecting member, the light guiding unit and the light emitting devices are such defined that the another part of the reflecting plate further reflects the light reflected by the another part of the optical waveguide so as to output it to the external from the surface of the optical waveguide.

[0043] With this method of outputting light, as we described in details the light emitting sources of the invention, the light emitting sources do not darken easily, and brightness of the light emitting sources can be further equalized. In addition, as brightness distribution of the light emitting sources is equalized, the light emitting sources can be made thinner. Furthermore, if the light emitting devices of red, blue and green are used as light emitting sources, and

when they are used in a liquid crystal display system, color reproducibility can be better and colors can be mixed uniformly in spite of decreased thickness.

[0044] In accordance with one aspect of the present invention, an illumination system comprises a light emitting source array in which a plurality of light emitting sources of the present invention are arranged, and a power supply unit that supplies electricity to the light emitting source array. With these light emitting sources, the light emitting sources do not darken easily in the periphery of the light emitting sources, which can then be made thinner, and thus an illumination system that has uniform brightness and decreased thickness can be manufactured.

[0045] In accordance with one aspect of the present invention, a liquid crystal display system according to the present invention is characterized in that it comprises a light emitting source array in which a plurality of light emitting sources of the present invention are arranged, and a liquid crystal display panel placed opposite to the light emitting source array. With this liquid crystal display system, corners of respective pixels do not become dark easily, display of the liquid crystal display panel can be crisp, and the liquid crystal display system can be made thinner. Furthermore, color reproducibility can be improved in the color display liquid crystal display system.

[0046] The components of the present invention that we have described above can be combined as arbitrarily as possible.

BRIEF DESCRIPTION OF THE DRAWINGS

[0047] **FIG. 1** shows a schematic sectional view illustrating the structure of a liquid crystal display according to the conventional example 1.

[0048] **FIG. 2** shows a schematic sectional view illustrating the structure of a liquid crystal display according to the conventional example 2.

[0049] **FIG. 3** shows the arrangement of when light is irradiated uniformly into a circular area with a diameter of 30 mm, by using cannonball type LEDs having an angle of beam spread of 40 degrees.

[0050] **FIG. 4A** shows a target surface sufficiently away from LED and a target surface close to LED in the case of the conventional example 2. **FIG. 4B** shows distribution of light intensity on the 2 target surfaces as shown in **FIG. 4A**.

[0051] **FIG. 5A** and **FIG. 5B** show how dense the LEDs for obtaining uniform light intensity on the target surface close to LED are arranged.

[0052] **FIG. 6** shows a schematic sectional view showing a backlight according to the conventional example 3.

[0053] **FIG. 7** shows a sectional view illustrating structure of a light source used in the backlight shown in **FIG. 6**.

[0054] **FIG. 8A** shows a target surface sufficiently away from LED and a target surface close to LED in the case of the conventional example 3. **FIG. 8B** shows distribution of light intensity on the 2 target surfaces as shown in **FIG. 8A**.

[0055] **FIG. 9** shows a schematic sectional view illustrating the structure of the liquid crystal display according to Embodiment 1 of the present invention.

[0056] **FIG. 10** shows a perspective view of light emitting sources comprising the light emitting source array as shown in **FIG. 9**.

[0057] **FIG. 11A** shows a top view of the light emitting sources as shown in **FIG. 10**. **FIG. 11B** shows a sectional view in the X-X direction (diagonal direction) of **FIG. 11A**. **FIG. 11C** shows a sectional view in the Y-Y direction of **FIG. 11A**.

[0058] **FIG. 12A** shows a perspective view of a disk-like reflecting member when viewed from the rear surface. **FIG. 12B** shows a top view from the rear surface.

[0059] **FIG. 13** shows a schematic sectional view illustrating a molded die for molding a molded unit of the light emitting sources.

[0060] **FIG. 14A** shows a perspective view of the molded unit when viewed from the rear surface. **FIG. 14B** shows a top view when viewed from the rear surface.

[0061] **FIG. 15** shows an enlarged sectional view illustrating details of the light emitting sources according to Embodiment 1, which shows a section in the diagonal direction.

[0062] **FIG. 16** shows a sectional view of the light emitting sources disclosed in the Japan Unexamined Patent Publication No. 2004-189092.

[0063] **FIG. 17** shows how corner parts darken in the light emitting sources as shown in **FIG. 16**.

[0064] **FIG. 18** shows the light emitting source array in which a plurality of the light emitting sources as shown in **FIG. 16** are arranged, distribution of light intensity in a target surface in a direction parallel to the side, and distribution of light intensity in a target surface in the diagonal direction.

[0065] **FIG. 19** shows an illustration describing effect of the light emitting sources according to Embodiment 1.

[0066] **FIG. 20** shows a sectional view of a variant example of Embodiment 1.

[0067] **FIG. 21** shows a section of the light emitting sources of Embodiment 2 of the present invention in the diagonal direction and a partial enlarged section thereof.

[0068] **FIG. 22** shows a sectional view of the light emitting source of Embodiment 3 of the present invention in the diagonal direction.

[0069] **FIG. 23** shows an illustration for describing the design conditions of a slope angle α of a direct output area and inclination β of a slope total reflection area.

[0070] **FIG. 24** shows the range on the α-β plane that satisfies the conditions of the expressions (6A), (6B) and (6C).

[0071] **FIG. 25** shows the area in which a backward sloping reflecting area can be arranged.

[0072] **FIG. 26** shows an illustration describing how the direction of light oriented to the corner part from the total reflection area is adjusted by adjusting the slope angle ϵ of the backward sloping reflection area.

[0073] **FIG. 27** shows an illustration describing how the direction of light oriented to the corner part is adjusted by adjusting the slope angle ϵ of the backward sloping reflection area.

[0074] **FIG. 28** shows an illustration describing the design conditions of a height of a cup unit.

[0075] **FIGS. 29A**, B and C show the light emitting sources of different shapes.

[0076] **FIGS. 30A**, B and C show different variant examples of the light emitting sources.

[0077] **FIG. 31** shows a front view of the variant example of the light emitting source array.

[0078] **FIG. 32** shows a sectional view illustrating the structure of light emitting sources according to Embodiment 4 of the present invention.

[0079] **FIG. 33A** shows distribution of illuminance on a predetermined target surface in the light emitting sources according to Embodiment 4. **FIG. 33B** shows distribution of brightness on the surface of the light emitting sources according to Embodiment 4.

[0080] **FIG. 34** shows a sectional view illustrating the structure of light emitting sources according to the variant example of Embodiment 4 of the present invention.

[0081] **FIG. 35** shows a sectional view illustrating the structure of light emitting sources according to Embodiment 5 of the present invention.

[0082] **FIG. 36A** shows distribution of illuminance on a predetermined target surface in the light emitting sources according to Embodiment 5. **FIG. 36B** shows distribution of brightness on the surface of the light emitting sources according to Embodiment 5.

[0083] **FIG. 37** shows a light emitting source array according to Embodiment 6 of the present invention, distribution of luminance on a target surface in a direction parallel to the side, and distribution of luminance on a target surface in a diagonal direction.

[0084] **FIG. 38** shows a light emitting source array according to Embodiment 7 of the present invention, distribution of luminance on a target surface in a direction parallel to the side, and distribution of luminance on a target surface in a diagonal direction.

[0085] **FIG. 39** shows a sectional view of a backlight according to Embodiment 8 of the present invention.

[0086] **FIG. 40** shows a perspective view of an illumination system for indoor lighting according to Embodiment 9 of the present invention.

DESCRIPTION OF THE PREFERRED EMBODIMENTS

[0087] In the following, we describe embodiments of the present invention in details, with reference to the drawing. However, the present invention shall not be limited to the following embodiments but designs thereof may be modified, as appropriate, depending on applications, etc.

Embodiment 1

[0088] **FIG. 9** shows the schematic sectional view illustrating the structure of a liquid crystal display (liquid crystal display system) **41** according to Embodiment 1 of the present invention. The liquid crystal display **41** is configured with a backlight **43** positioned on the rear of a liquid crystal panel **42**. The liquid crystal panel **42** may be of a general type, and is comprised of a polarizing plate **44**, a liquid crystal cell **45**, a phase difference plate **46**, a polarizing plate **47** and an antireflection film **48** that are sequentially laminated from the back face.

[0089] The backlight **43** is such configured that a light diffusing film **51**, a prism sheet **52**, and brightness enhancing film **53** are positioned on the front of light emitting source array **50** on which a plurality of light emitting sources **49** are arranged. As described below, the light emitting sources **49** are formed like a square when viewed from a front view, and the light emitting source array **50** is comprised of the said light emitting sources **49** approximately one hundred of which or several hundreds of which are arranged nearly in a grid. The light diffusing film **51** not only attempts to equalize brightness by diffusing light outputted from the light emitting source array **50**, but also serves to uniformly mix light of respective colors outputted from the light emitting source array **50**. The prism sheet **52** bends and transmits angularly incident light in the direction perpendicular to the prism sheet **52** by deflecting or internally reflecting it, thereby improving brightness of the front of the backlight **43**.

[0090] The brightness enhancing film **53** is a film that transmits linear polarized light in a certain plane of polarization, and reflects linear polarized light in a plane of polarization that is orthogonal thereto, and the film serves to increase the usability of the light outputted from the light emitting source array **50**. In other words, the brightness enhancing film **53** is arranged such that the plane of polarization of transmitting light matches the plane of polarization of the polarizing plate **44** that are used in the liquid crystal panel **42**. Thus, among light outputted from the light emitting source array **50**, light for which the polarizing plate **44** matches the plane of polarization transmits through the brightness enhancing film **53** and enters the liquid display panel **42**, while the light for which the polarizing plate is orthogonal to the plane of polarization is reflected at the brightness enhancing film **53** and returned, and reflected at the light emitting source array **50** and enters the brightness enhancing film **53** again. A part of the light reflected at the brightness enhancing film **53** and returned transmits the brightness enhancing film **53** since the plane of polarization rotates until that light is reflected at the light emitting source array **50** and enters the brightness enhancing film **53** again. Through repetition of such reactions, most of the light outputted from the light emitting source array **50** is utilized by the liquid crystal panel **42**, which improves brightness of the liquid crystal panel **42**.

[0091] **FIG. 10** shows a perspective view of the light emitting sources **49** that comprise the light emitting source array **50**. **FIG. 11A** shows a top view of the light emitting sources **49**, **FIG. 11B** shows a sectional view in the X-X direction of **FIG. 11A** of the light emitting sources **49**, and **FIG. 11C** shows a sectional view in the Y-Y direction of **FIG. 11A** of the light emitting sources **49**. In the light emitting sources **49**, an almost dished molded unit (light guiding unit) **54** is formed by light transmissive material having a high refractive index, such as transparent resin. As the light transmissive materials comprising the molded unit

54, light transmissive resin such as epoxy resin or acryl resin, or glass material may be used. On the surface of the wiring board **55** are installed light emitting devices **56**R, **56**G, and **56**B such as three LED chips, etc. having luminous colors of red, green and blue. The light emitting devices **56**R, **56**G, and **56**B are encapsulated in the molded unit **54**, and positioned in the central area on the back face in the molded unit **54**. Toric channels **58** are provided on the front surface of the molded unit **54**.

[**0092**] On the back face of the molded unit **54** are provided the reflecting member **57** shaped like a concave mirror for reflecting light total reflected on the front surface of the molded unit **54**. The reflecting member **57** may be a metal coating such as Au, Ag, Al, etc. deposited on the rear of the molded unit **54**, or a metal plate of aluminum, for instance, with the surface reflectivity increased by mirror-like finishing the surface, or a curved plate of metal having a surface plated with Au, Ag, AL, etc. or of resin.

[**0093**] In the following we describe a method of manufacturing the light emitting sources **49**. First, as shown in **FIG. 12A** and (b), a disk-like reflecting member **57** of the light emitting sources **49** is designed. Then, once the disk-like shape of the reflecting member **57** is determined, the square shape of the reflecting member **57** as shown in chain double-dashed line in **FIG. 12B** is determined as the shape of the reflecting member **57** being a product. When the square shape of the reflecting **57** is determined, then, a lower die **91** and an upper die **92** that have a molded surface **94** being equal to the reflecting member **57** in cavities are made. **FIG. 13** schematically shows the molded die. In making the light emitting source **49**, the light emitting devices **56**R, **56**G, and **56**B, and a cup part **65** are set in the central part of the bottom of the lower die **91**, and not only transparent resin is injected through a resin inlet **93** of the upper die **92** to mold the molded unit **54**, but also the light emitting devices **56**R, **56**G, and **56**B and the cut unit **65** are inserted into the molded unit **54**. When the molded unit **54** as shown in **FIG. 14** is obtained, metal such as Au, Ag, Al, etc. is deposited on the outer surface of the molded unit **54**, thus forming the reflecting member **57**.

[**0094**] An alternative method is to inject resin into a rectangular cavity of a molded die in which a square shaped reflecting member **57** is fitted, so that a rectangular shaped light emitting source **49** may be directly fabricated. In either the former and latter methods, the cup unit **65** may be formed integrally with the reflecting member **57**.

[**0095**] **FIG. 15** shows an enlarged sectional view illustrating the light emitting sources **49** of the present invention in details, and represents the section in the diagonal direction. In the central front part of the mold **54** is provided a direct output area **60** (a first region) on the outer side of which is provided an annular total reflection area **61** (a second region). The direct output area **60** is a smooth circular area formed of a plane perpendicular to the center axis of the mold unit **54**, and the total reflection area **61** is also a smooth annular area formed of a plane perpendicular to the center axis of the mold unit **54**. Although in the illustrated example, the direct output area **60** and the total reflection area **61** are formed in the same plane, and the direct output area **60** is on a level with the total reflection area **61**, the direct output area **60** may be on a higher level than the total reflection area **61** by protruding the direct output area **60** more than the total reflection area **61** in the channel **58**. Although the direct output area **60** is primarily the region that directly outputs light outputted from the light emitting devices **56**R, **56**G, and **56**B to the external, as described below, it also serves to total reflect incident light. Similarly, although the total reflection area **61** primarily serves to total reflect incident light to the side of the reflecting member **57**, it also serves to transmit the incident light and output it to the external. From what is said above in relation with **FIG. 15**, it may be understood that what is called the direct output area **60** is a surface that is a direct output for light coming directly from LEDs **56**R B and G. It may be also a total reflection area for light reflected on slope **63**. Also, the annular total reflection area **61** is a total reflection area for light coming from LEDs **56**R B and G but it may be a passing through area for light reflected from one of annular reflecting areas **64***a*, **64***b*, **64***c* . . . , of the reflecting member **57** as shown in **FIG. 15**. Said annular reflecting areas **64***a*, **64***b*, **64***c* . . . , will now be discussed.

[**0096**] Toric channels **58** are provided between the direct output area **60** and the total reflection area **61**, with the total reflection area **62** being formed on the bottom of the channel **58**. In addition, an angularly inclined slope total reflection area **63** (a third region) is formed in the side of the inner circumference of the channel **58**, and the slope total reflection area **63** is formed as a tapered truncated cone so that the diameter decreases progressively as it shifts to the front surface of the mold unit **54**. Although the total reflection area **62** as well as the slope total reflection area **63** primarily serve to total reflect incident light, a part of the incident light may possibly transmit through the slope total reflection area **63** and be outputted to the external.

[**0097**] The reflecting member **57** is comprised of a plurality of annular reflecting areas **64***a*, **64***b*, **64***c* . . . the innermost reflecting area **64***a* of which (backward slope area) is formed like a truncated cone and inclined downward to the back face as it moves to the outer circumference side (Such a direction of tip is referred to a backward slope). The reflecting areas **64***b*, **64***c* . . . also comprise a Fresnel reflecting surface. As such, if some of the reflecting members **57** are formed like the Fresnel reflecting surface, the light emitting devices **49** can be made further thinner. Designing the plurality of the reflecting areas **64***a*, **64***b*, . . . with mutually independent parameters would allow respective areas to be designed optimally, thus enabling more uniform light emission. Also, between the reflecting area **64***a* and an opening **59** is provided a cup unit **65** with the interior circumferential surface inclined so that the opening **59** can be wider in the front surface side.

[**0098**] Although **FIG. 15** shows the four reflecting areas **64***a*, **74***b*, **64***c* and **64***d*, the reflecting areas may be three, or more than four.

[**0099**] It would be desirable to design a curved shape of the reflecting areas **64***b*, **64***c*, and **64***d* into the shape that allows light to be uniformly outputted from the front of the light emitting devices **49** as far as it is possible. For instance, if the light emitting sources **49** are designed based on the light emitting sources that are circular when viewed from the front, the shape could be a conic surface as represented by the following expression.

[Expression 1]

$$Z = \frac{CV\rho^2}{1+\sqrt{1-CV^2(CC+1)\rho^2}} + A\rho^4 + B\rho^6 + C\rho^8 + D\rho^{10} + \ldots \quad (1)$$

wherein, $\rho = \sqrt{X^2+Y^2}$

[0100] Herein, X, Y, and Z are rectangular coordinates with their origin at the center of the reflecting member **57**, the Z axis being coincident with the optical axis of the reflecting member **57** and the center axis of molded unit **54**. In addition, CV is a curvature of the reflecting member **57**, CC a conic coefficient, and A, B, C and D a quartic, sextic, octal and decimal aspheric coefficient, respectively.

[0101] Thus, if the centrally positioned light emitting devices of three colors, namely, red, green and blue **56**R, **56**G, and **56**B emit light, among light outputted from the light emitting devices **56**R, **56**G, and **56**B, the light outputted with an output angle θ**1** (<θc) that is smaller than the critical angle of total reflection θc on the interface of the molded unit **54** enters the direct output area **60**. Then, this light transmits through the direct output area **60** and is directly outputted forward from the light emitting sources **49**. In addition, light outputted with an output angle θ**3** (>θc) that is greater than the critical angle of total reflection θc enters the total reflection area **62**. This light enters the reflecting area **64***b* by being total reflected at the total reflection area **62**, and after being reflected at the reflecting area **64***b*, it transmits through the total reflection area **61** and is outputted forward. In addition, light outputted with an output angle θ**4** (>θ**3**) that is greater than the critical angle θc of the total reflection enters the total reflection area **61**. This light enters the reflecting area **64***c* by being total reflected at the total reflection area **61**, and after being reflected at the reflecting area **64***c*, it transmits through the total reflection area **61** and is outputted forward. In addition, light outputted with an output angle *f***5** (>θ**4**) that is greater than the output angle θ**4** enters the reflecting area **64***d* by being total reflected at the total reflection area **61**, and after being reflected at the reflecting area **64***d*, it transmits through the total reflection area **61** and is outputted forward. In addition, the light outputted from the light emitting devices **56**R, **56**G, and **56**B with an output angle θ**2** (θ**1**<θ**2**<θ**3**) between the output angle θ**1** to the direct output area **60** and that θ**3** to the total reflection area **62** enters the slope total reflection area **63**. Then, after being total reflected twice in the slope total reflection area **63** and the direct output area **60**, it is reflected at the reflecting area **64***a*. Furthermore, it is not only total reflected in the total reflection area **61** but also reflected in the reflecting area **64***d*, and is outputted forward from the corner parts of the light emitting source **49**. Consequently, this allows uniform brightness to be obtained in the front surface of the light emitting sources **49**, thus, in particular, preventing the corner parts of the light emitting sources **49** from being darkening.

[0102] The light entering the slope total reflection area **63** may be any light with an output angle greater or smaller than a critical angle of total reflection. However, it is desirable that the light entering the corner parts of the light emitting sources **49** would be light having strong intensity. Thus, desirably, the output angle θ**2** that enters the slope total reflection area **63** would be smaller than the critical angle θc of total reflection. In other words, the following would be desirable:

$$\theta 2 < arc\ \sin(n2/n1) = \theta c$$

wherein n1 is a refractive index of the molded unit **54**, and n2 is a refractive index of medium (such as air) that contacts the front surface of the molded unit **54**.

[0103] As seen from behavior of the light described above, a gradient of a tangent in the reflecting area **64***c* is greater than that of a tangent in the reflecting area **64***b*, and a gradient of a tangent in the reflecting area **64***d* is greater than that of a tangent in the reflecting area **64***c*.

[0104] Incidentally, the applicant of the present invention also applies for a patent of a light emitting source that is similar to the light emitting source **49**, the former of which is disclosed Japan Unexamined Patent Publication No. 2004-189092. **FIG. 16** shows a sectional view of the light emitting source **101** disclosed in the Japan Unexamined Patent Publication No. 2004-189092. For this light emitting source **101**, a channel **103** is also provided on the front surface of a molded unit **102**, and a plurality of annular reflecting areas **105***a*, **105***b*, and **105***c* are also provided on a reflecting member **104** on the back face. However, in this light emitting source **101**, either the reflecting area **105***a* or **105***b* is inclined downward to the back side as it shifts to the inner circumference side, and the light total reflected twice in the slope total reflection area **106** in the inner circumference of the channel **103** and the direct output area **107** enters the reflecting area **105***b*, is reflected at the reflected area **105***b*, and outputted forward from an intermediate area between the direct output area **107** and the total reflection area **108** or from the vicinity thereof.

[0105] As seen from **FIG. 16**, this light emitting source **101** is such configured that only the light outputted with a large output angle from the light emitting device **109** (the light with the output angle of θ**5** in **FIG. 15**) is outputted forward from the corner parts of the light emitting source **101**. However, intensity of the light outputted from the light emitting device **109** is high in the front and decreases as the output angle increases. For this reason, in the light emitting source **101**, a sufficient amount of light is not outputted from the corner parts. Hence, there is a problem that as brightness or illuminance degrades in the shaded corner part D of the light emitting source **101** as shown in **FIG. 17**, it becomes dark. In particular, if an array is made by arranging a plurality of the light emitting sources **101**, as shown in **FIG. 18**, uniform light intensity (illuminance) could be obtained on the line y-y running through the center of the light emitting source **101** and being parallel to the array direction. However, in the diagonal direction on line x-x, it is very dark at a junction of the corner parts, and thus uniform illuminance could not be achieved. In particular, darkness at the corner part D stood out when a target surface came closer to the light emitting source **101**.

[0106] At the same time, in the light emitting source of the present invention, backward sloping the reflecting area **64***a* so that it is inclined downward to the back face side as it moves to the outer circumference outputs forward from the corner part the light with small output angle of θ**2** that is total reflected twice in the slope total reflection area **63** and the direct output area **60**, by reflecting it in the reflecting area

64*a* and the total reflection area **61**. As a result, in addition to the light with a large output angle, it has become possible to feed the light with a small output angle and having strong light intensity (light of the output angle of θ**2**) into the corner part and output it forward, thereby making it possible to uniformly output to the entire light emitting source **49**. In particular, when the light emitting sources are made an array, not only uniform brightness could be achieved in the entire light emitting source array **50** but also uniform illuminance could be obtained in the target surface.

[**0107**] In addition, in the light emitting source of the present invention, as the light emitting sources **49** in which LED chips of three colors, red, green and blue are built in is used, color reproducibility of the liquid crystal display **41** can be better, making three primary colors look vivid.

[**0108**] As luminance in the diagonal direction increases in the light emitting sources of the present invention, illuminance of light on a target surface closer to the light emitting sources **49** can be equalized, thereby making a backlight **43** thinner. Furthermore, as shown in **FIG. 19**, because of a long optical path length that light outputted from the light emitting device follows till it is outputted from the front face of the light emitting source as shown in **FIG. 19**, light of respective colors outputted from the light emitting devices **56**R, **56**G and **56**B is mixed sufficiently in the molded unit **54** before it is outputted from the light emitting source, and uniformly outputted from the front face. Thus, this light emitting source could reduce the equalizing space that is needed in front of the light emitting source array, namely, thickness of the space for equalizing light intensity distribution or light mixing state can be reduced, and thus the backlight **43** can be made thinner.

[**0109**] For instance, if we manufacture a light emitting source array of equivalent brightness or uniformity, thickness of a backlight of 30 mm, which is equivalent to that of a conventional backlight using cold cathode tubes, can be achieved with the light emitting source array **50** of the present invention, and good color reproducibility comparable with the conventional example utilizing the three-color LEDs can be achieved.

[**0110**] Furthermore, with the light emitting source of the present invention, as we can fabricate a backlight that is a square, about 30 mm on a side and has adequately uniform brightness distribution, the arrangement of necessary light emitting sources could be less dense, thereby achieving more power saving than the conventional example 2.

[**0111**] In addition, the light emitting source array **50** of the present invention is such configured that surface light sources **49** are arranged. Thus, to change size or fitness ratio of the light emitting source array **50**, the design can be easily changed simply by increasing or decreasing the light emitting sources **49**, which enables the light emitting source array **50** or the backlight **43** that has high degree of freedom.

[**0112**] **FIG. 20** shows a sectional view of a variant example of Embodiment 1. The variant example is such configured that light reflected at the reflecting area **64***a* directly enters the reflecting area **64***d* of the corner part, is reflected at the reflecting area **64***d*, and outputted forward. Even in such the variant example, the effect similar to the Embodiment 1 can be achieved.

[**0113**] In addition, the reflecting area **64***a*, although not shown, may slope backward only in the diagonal direction, in the middle of which it may be angularly inclined forward (which is referred to as positive inclination) as it moves to the outer circumference. Thus, light reflected at the positive inclination part of the reflecting area **64***a* may be outputted forward from intermediate between the direct output area **60** and the total reflection area **61**.

Embodiment 2

[**0114**] **FIG. 21** shows a sectional view of a light emitting source **68** according to Embodiment 2 of the present invention and a partial enlarged view thereof. In the light emitting source **68**, toric channel **58** is depressed and installed between the direct output area **60** and the total reflection area **61**, thus forming a slope total reflection area **63** along the sides of the inner circumference of the channel **58**. In addition, a conically shaped depression **66** is depressed and installed in the central part of the direct output area **60**, forming a slope total reflection area **67** on the outer circumference of the depression **66**.

[**0115**] Thus, in the Embodiment 2, among light outputted from the light emitting devices **56**R, **56**G, and **56**B, light entering the inner slope total reflection area **67** is total reflected sequentially at 3 points of the slope total reflection area **67**, the direct output area **60**, and the outer slope total reflection area **63**. Then, the light total reflected at the slope total reflection area **63** enters the backward sloping reflecting area **64***a*. Then, the light entering the reflecting area **64***a* after being total reflected at the total reflection area **61**, or directly, enters the reflecting area **64***d*, is reflected at the reflecting area **64***d* and outputted forward from the total reflection area **61**.

[**0116**] According to the Embodiment 2, the output angle θ**2** of the light to be guided to the reflecting area **64***d* of the corner part will be the output angle of the light to be outputted to the inner slope total reflection area **67** from the light emitting devices **56**R, **56**G, and **56**B. Thus, as light having a smaller output angle θ**2** than that of the Embodiment 1 will be outputted from the corner part, brightness of the corner part of the light emitting source **68** and illuminance of the periphery on the target surface can be improved.

Embodiment 3

[**0117**] Fit. **22** shows a sectional view of a light emitting source **69** in the diagonal direction according to Embodiment 3 of the present invention. Although the light emitting source **69** has almost similar structure to Embodiment 1, a direct output area **60** is gently inclined, thus being conically shaped. In the light emitting source **69**, similar to Embodiment 1, light outputted from the light emitting devices **56**R, **56**G, and **56**B to the slope total reflection area **63** is total reflected at the slope total reflection area **63**, entering the direct output area **60**. Then, after being total reflected in the direct output area **60** and reflected at the direct output area **60**, the light enters the reflecting area **64***d* either by being total reflected at the total reflection area **61** or directly, is reflected at the reflecting area **64***d*, and outputted from the corner part of the light emitting source **69**.

[**0118**] Thus, even in such the embodiment, distribution of intensity of the light outputted from the light emitting source **69** (brightness, illuminance) can be equalized across the screen. Yet, in Embodiment 3, as the direct output area **60** is inclined in the section of the light emitting source **69**, a

direction of reflection of the light reflected in the direct outputted area **60** can be adjusted by adjusting a slope angle (slope angle α as shown in **FIG. 23**) of the direct output area **60**. Hence, degree of freedom in designing the light emitting source **69** will be higher and enables optimum designing for increasing the light intensity at the corner part.

[**0119**] Although we have now described the Embodiments 1 to 3 and the variants thereof, other shapes of the light irradiation surface of the light guiding unit or of the reflecting member, such as those disclosed in the Japan Unexamined Patent Publication No. 2004-189092, can be adopted. Even in such a case, however, it is needless to say that a backward sloping reflecting area (backward slope area) is provided in the vicinity of the central part of the reflecting member, and after being total reflected at the light irradiation surface of the light guiding unit, light outputted with a relatively small output angle from the light emitting devices enters the backward sloping reflecting area, and the light reflected at the backward sloping reflecting area is outputted from the corner part of the light emitting source.

DESIGN EXAMPLES

[**0120**] In the following, taking the Embodiment 3 as an example, we describe specific design examples in the light emitting source of the present invention, following **FIG. 23** to **FIG. 28**. First we describe designing of a reflecting area **64***a*.

[**0121**] **FIG. 25** shows an area in which a backward sloping reflecting area **64***a* can be arranged. Assuming that a light emitting point of the light emitting devices **56**R, **56**G, and **56**B is P, that the point where the light outputted with an output angle equal to the critical angle θc from the light emitting point P enters the total reflection area **61** or the total reflection area **62** in the channel **58** is Q, and that the point where the optical axis of the light total reflected at the point Q intersects with the surface of the wiring board **55** is R, the reflecting area **64***a* must be within the area surrounded by PQR so that the light outputted from the light emitting devices **56**R, **56**G, and **56**B is not blocked from entering the reflecting area **64***b* after being reflected in the total reflection area **61**. In addition, to prevent **64***a* from shielding light to be fed to the corner part of the light emitting source, when assuming that a distance between the light irradiation surface of the light emitting devices **56**R, **56**G, and **56**B and the front face of the molded unit **54** is H, and that length of a side of the light emitting source (length of a diagonal line) is U, from the light emitting point P of the light emitting devices **56**R, **56**G, and **56**B,

$$\gamma = arc\tan(U/2H) \tag{2}$$

the reflecting area **64***a* should be arranged in the area of the wiring board **55** side rather than the line segment PS drawn to the output angle direction. In addition, if the line segment PS is extended to the side S, it will reach a center of the outer sides of the front face of the light emitting source. Now we consider a line segment PS that connects the light emitting point P with a center of a side of the light emitting source. Although light that directly reaches the corner part of the light emitting source might be shielded by **64***a*, such light has a large output angle and less intensity, there would be no material influence even if it is blocked in the reflecting area **64***a*. In effect, the reflecting area **64***a* should be placed in the shaded area of **FIG. 25**.

[**0122**] Next, with reference to **FIG. 23**, we describe the angle range of the slope angle ϵ of the reflecting area **64***a*. First, if we measure the slope angle ϵ from a horizontal direction, to the direction shown in **FIG. 23**, the reflecting area **64***a* will be:

$$\epsilon > 0° \tag{3}$$

as it is backward sloping.

[**0123**] Then, we describe specified tolerance of the slope angle ϵ of the reflecting area **64***a*. As shown in **FIG. 23**, we measure the slope angle α of the direct output area **60** (≧0°) and an inclination β of the slope total reflection area **63** (≧0°). Then, we assume that the angle that the direction of reflection of the light reflected at the slope total reflection area **63** makes with the slope total reflection area **63** is κ1, the angle that the direction of reflection of the light reflected at the direct output area **60** makes with the direct output area **60** is κ2, and the angle that the direction of reflection of the light reflected at the reflecting area **64***a* makes with the reflecting area **64***a* is κ3. Then, as we can see from the ray diagram of **FIG. 23**, the angle κ3 can be expressed in the following expression.

$$\kappa 3 = 90° - \theta 2 - 2\beta - 2\alpha - \epsilon$$

wherein κ3>0°, and thus, the above expression shall be:

$$\epsilon < 90° - \theta 2 - 2\beta - 2\alpha \tag{4}$$

Thus, from the expressions (3) and (4), we can obtain the angle range of the slope angle ϵ of the backward sloping reflecting area **64***a:*

$$0° < \epsilon < 90° - \theta 2 - 2\beta - 2\alpha \tag{5}$$

The above conditions for designing of positions and angles of the reflecting area **64***a* are also applicable to the Embodiment 1.

[**0124**] The reflecting area **64***a* may be configured such that, as shown in **FIG. 26**, after being total reflected in the total reflection area **61**, the light that was total reflected in the front face of the molded unit **54** and entered the reflecting area **64***a* is outputted forward from the corner part by being total reflected in the reflecting area **64***d* at the corner part or directly fed to the reflecting area **64***d* at the corner part, as shown in **FIG. 27**. To this end, as shown in **FIG. 26** or **FIG. 27**, the slope angle ϵ of the reflecting area **64***a* shall be an optimal value. This point is similar both in the Embodiments 1 and 2. In addition, the reflecting areas **64***b*, **64***c*, and **64***d* may be a conically shaped surface as described in Embodiment 1.

[**0125**] Next we describe the conditions to be satisfied by the slope angle α of the direct output area **60** and the inclination P of the slope total reflection area **63**. Now, we assume that the direct output area **60** and slope total reflection area **63** lie in the area of light flux that is outputted from the light emitting devices **56**R, **56**G, and **56**B with a smaller output angle than the critical angle θc of total reflection. When we express this condition with the mathematical expression, and assume that a distance between the light irradiation surface of the light emitting devices **56**R, **56**G, and **56**G and the surface of the molded unit **54** is H, it follows that the direct output area **60** and the slope total reflection area **63** may be contained in the area in which on the surface of the molded unit **54**, a radius from the center of the direct output area **60** is r=H tan θc. However, when we assume that refractive index of the molded unit **54** is n1 and

that of the medium (such as air) contacting the front face of the mold **54** is n2, it shall be:

$$\theta c = arc\ \text{sine}(n2/n1)$$

[**0126**] Next, the condition for the light outputted from the light emitting devices **56**R, **56**G, and **56**B with an output angle θ**2** (≦θc) to be total reflected in the slope total reflection area **63** is:

$$90° - \Lambda 1 \geqq \theta c$$

Also, as seen from **FIG. 23**, as

$$\kappa 1 = \theta 2 + \beta$$

we can obtain the following from the above 2 expressions:

$$\beta \leqq 90° - \theta 2 - \theta c \quad (6A)$$

In addition, the condition for the light total reflected in the slope total reflection area **63** to be total reflected also in the direct output area **60** shall be:

$$90° - \kappa 2 \geqq \theta c$$

Also, as seen from **FIG. 23**, as

$$\kappa 2 = 90° - \theta 2 - 2\beta - \alpha$$

we can obtain the following from the above 2 expressions:

$$\beta \geqq (-\alpha + \theta c - \theta 2)/2 \quad (6B)$$

Furthermore, according to the above expression (5), since

$$0° < 90° - \theta 2 - 2\beta - \alpha$$

$$\beta < -\alpha + (90° - \theta 2)/2 \quad (6C)$$

FIG. 24 shows the range that satisfies these 3 expressions (6A), (6B) and (6C) and the condition of α≧0° and β≧0° in terms of α−β plane. In **FIG. 24**, the range that satisfies the condition is hatched. Although a positional relationship of lines representative of the expressions (6A), (6B) and (6C) may vary depending on the magnitude of θ**2** and θc, **FIG. 24** shows as an example the positional relationship of when the design was made assuming θ2=27° to 37°, compared to θc=42.2° to 40.5° when resin having the refractive index of 1.49 to 1.54 is used. Then,

$$(\theta c - \theta 2)/2 < 90° - \theta 2 - \theta c < (90° - \theta 2)/2$$

Also, in **FIG. 24**, a border line contained in the range that satisfies the condition is expressed in thick solid line, while a border line not contained in the range that satisfies the condition is expressed in broken line. If we assume α=0° in **FIG. 24**, it would also be applicable to the Embodiment 1.

[**0127**] A cup unit **65** is not only provided to stabilize the reflecting member **57** on the wiring board **55**, but also serves to limit the range of the output light. As shown in **FIG. 28**, we assume that an output angle of the output light passing through the tip of the cup unit **65** is η. Then, if we assume that a diameter of the cup unit **65** is K, and a height difference between the light irradiation surface of the light emitting devices **56**R, **56**G, and **56**B and the tip of the cup unit **65** is G, the above mentioned output angle η shall be:

$$\tan \eta = K/(2G) \quad (7)$$

[**0128**] When the expression (7) is satisfied, light with an output angle greater than η will be shielded at the cup unit **65**. Setting the height of the cup unit **65** so that the light that directly reaches an end of the corner part of the light emitting source from the light emitting devices **56**R, **56**G, and **56**B will not be shielded could improve brightness of the corner part of the light emitting source. However, since there is a clearance between the front face of the light emitting source and the reflecting member **57** in the sides of the light emitting source (see **FIG. 10**), light leaking therefrom into the contiguous light emitting source will increase. As the light leaking into the contiguous light emitting source becomes stray light and degrades the quality of the light emitting source, it would be desirable to reduce such light. At the same time, as the light passing through the vicinity of the tip of the cup unit **65** is light having a large output angle and a small intensity, there would be in fact little material influence on brightness of the corner part even though such the light were shielded. Therefore, it would be desirable to set the height of the cup unit **65** so that it will not shield the light of the output angle that reaches the center of the side among outer circumferential edges of the front face of the light emitting source, while it will shield the light with the output angle that reaches the corner of the corner part of the light emitting source.

[**0129**] For light not to directly reach the corner of the corner part although light directly reaches the center of the side of the outer circumference of the front face of the light emitting source, the following condition should be satisfied:

$$arc\ \tan(U/2H) \leqq \eta \leqq arc\ \tan(T/2H) \quad (8)$$

wherein T is length in the diagonal direction (length of the diagonal line) of the light emitting source when viewed from the front, and U is length of one side of the light emitting source when viewed from the front. This condition applies to the Embodiments 1 and 2.

Variant Examples of Embodiments 1 to 3

[**0130**] In the above Embodiments 1 to 3, a light emitting source array is comprised of planar-like closely arranged square light emitting sources. To closely arrange the light emitting sources, the light emitting source may not be limited to a square, but may be a regular hexagon as shown in **FIG. 29A** or a regular triangle as shown in **FIG. 29B** or a rectangle as shown in **FIG. 29C**. Although, similar to a square light emitting source, a light emitting source in the form of a regular hexagon or a regular triangle may be designed based on a circular light emitting source, it would be desirable that a rectangle light emitting source be designed based on an oval light emitting source.

[**0131**] If the inner circumference of the reflecting area **64***d* of the corner part is made to be inscribed in the edge of the light emitting source as shown in **FIGS. 29A**, B and C, light reflected at the reflecting areas **64***a* and **64***d* will be outputted only from the corner part. It would be desirable, however, to set a relation of magnitude of inner perimeter of the reflecting area **64***d* and the contour of the light emitting source through simulations, etc., so that illuminance in a predetermined target surface can be most uniform.

[**0132**] **FIGS. 30A**, B and C show another variant example of a light emitting source. The variant example is a light emitting source that uses a plurality of light emitting devices **56** wherein respective light emitting devices **56** are arranged in the central area of the light emitting source in its diagonal direction. Although in **FIG. 30**, the light emitting devices **56** are also arranged in the center of the light emitting source, there may be no light emitting device **56** in the center. The ends of the light emitting source in the diagonal direction are remote from the center and thus light do not reach easily. However, arrangement of the light emitting devices **56** in the

diagonal direction of the light emitting source would bring the light emitting devices **56** closer to the end of the light emitting source in the diagonal direction and thus facilitate light to reach easily. Thus, with such the variant example, distribution of intensity of the light emitting source can be more uniform. In addition, each of the light emitting devices **56** as shown in **FIGS. 30A**, B and C may be a triplet of red, green and blue LED chips or an individual LED chip of red, green or blue.

[**0133**] In addition, a light reflecting layer or light absorption layer may be formed in the outer circumference face of the light emitting source so that no light will leak from the side to contiguous light emitting source.

[**0134**] In addition, if square or rectangle light emitting sources are arranged, the light emitting sources **49** may be arranged by displacing each row by a half pitch, such as the light emitting source array **50** shown in **FIG. 31**.

Embodiment 4

[**0135**] **FIG. 32** shows a sectional view of a light emitting source **70** according to Embodiment 4 of the present invention. In this light emitting source **70**, the direct output area **60** is curved spherically. If the direct output area **60** is planar as with the Embodiment 1, and if the direct output area **60** is relatively wide, light to be outputted from the edge of the direct output area **60** will be outputted diagonally forward with a large output angle. Thus, in the case of Embodiment 1, even if brightness on the surface of the light emitting source is uniform, uniformity of illuminance on the target surface might degrade since illuminance is lowered at the part opposing to the outer circumference of the direct output area **60** on the predetermined target surface.

[**0136**] At the same time, in the light emitting source **70** of Embodiment 4, as the direct output area **60** is curved, light to be outputted from the entire direct output area **60** focuses forward due to the lens action of the curved direct output area **60**, which consequently alleviates degradation of uniformity of the illuminance. **FIG. 33B** shows distribution of brightness on the surface of the light emitting source **70**, and **FIG. 33A** shows distribution of illuminance in the predetermined target surface (i.e., the target surface located 30 mm from the surface of the light emitting source). The uniformity of brightness and illuminance has been improved, and in particular, uniformity of illuminance has been improved substantially.

[**0137**] **FIG. 34** shows a sectional view of the light emitting source **71** according to the variant example of Embodiment 4. In this light emitting source **71**, rather than curving the direct output area **60**, the outer circumference edge of the direct output area **60** is chamfered, and the inclined, chamfered unit **60***a* is provided. Provision of the chamfered unit **60***a* in the outer circumference edge of the direct output area **60** would collect light outputted from the outer circumference edge of the direct output area **60** forward, thus improving uniformity of brightness and illuminance, similar to the light emitting source **70** of Embodiment 4.

Embodiment 5

[**0138**] **FIG. 35** shows a sectional view of the light emitting source **72** according to Embodiment 5 of the present invention. Although uniformity of brightness and illuminance could be improved with the light emitting sources **70**, **71** according to Embodiment 4 or the variant example thereof, the uniformity has limits as seen from **FIGS. 33A** and B.

[**0139**] In the light emitting source **72** according to Embodiment 5, the reflecting areas **64***b* to **64***d* of the reflecting member **57** have light-harvesting feature, and after being reflected at the reflecting areas **64***b* to **64***d*, light outputted from the light emitting source **72** is caused to converge at a point J set more remote than the predetermined target surface.

[**0140**] **FIG. 36B** shows distribution of brightness on the surface of the light emitting source **72**, and **FIG. 36A** shows distribution of illuminance on the predetermined target surface (i.e., the target surface located 30 mm from the surface of the light emitting source). As can be seen by comparing this with **FIG. 33**, with the light emitting source **72** of Embodiment 5, uniformity of brightness and illuminance has dramatically improved, and distribution of brightness and illuminance has almost flattened.

Embodiment 6

[**0141**] **FIG. 37** shows a top view illustrating a light emitting source array **73** according to Embodiment 6 of the present invention, wherein distribution of luminance (illuminance on a predetermined target surface) in a direction parallel to the side and distribution of luminance (illuminance on a predetermined target surface) in a diagonal direction are represented. In the single light emitting source **74** used in this light emitting source array **73**, a proportion of luminance (illuminance) Wa at a position opposed to the central area of the light emitting source **74** on the predetermined target surface, luminance Wb at a position opposed to the center of each side, and luminance Wc at a position opposed to the corner in the diagonal direction shall be:

$$Wa:Wb:Wc=1.0:0.5:0.25 \quad (9)$$

[**0142**] Respective light emitting sources **74** are arranged closely with no space therebetween. In other words, in a direction parallel to the side of the light emitting source **74**, as shown in **FIG. 37**, distribution curve of luminance of the light emitting source **74** on the target surface overlaps at a position where the proportion of luminance is 0.5, and as a result, in the direction parallel to the side, uniform luminance is achieved for the light emitting source array **73** as a whole. Similarly, in the diagonal direction of the light emitting source **74**, distribution curve of luminance of the light emitting source **74** on the target surface overlaps at a position where the proportion of luminance is 0.25, as shown in **FIG. 37**, and as a result, even in the diagonal direction, uniform luminance is achieved for the light emitting source array **73** as a whole. Hence, in designing a square light emitting source **74**, it would be desirable to design so that the proportion of luminance on the target surface will be a value of the expression (9) above.

[**0143**] In addition, in the case f a light emitting source array wherein regular hexagonal light emitting sources are closely arranged, a proportion of luminance (illuminance) Wa of the target surface at a position opposed to the central area of the light emitting source, a proportion of luminance Wb at a position opposed to the center of each side and luminance Wc at a position opposed to the corner in the diagonal direction shall be:

Wa:Wb:Wc=1.0:0.5:0.33

[0144] Then, a light emitting source array having uniform luminance on the target surface can be fabricated.

[0145] In addition, in the case of a light emitting source array wherein regular triangle light emitting sources are closely arranged, a proportion of luminance (illuminance) Wa of the target surface at a position opposed to the central area of the light emitting source, luminance Wb at a position opposed to the center of each side, and luminance Wc at a position opposed to the corner in the diagonal direction shall be:

Wa:Wb:Wc=1.0:0.5:0.17

[0146] Thus, a light emitting source array having uniform luminance on the target surface can be fabricated.

[0147] In addition, if uniformity of luminance of the light emitting source array of ±20% can be allowed, the proportion of luminance in the square light emitting source may be:

Wa:Wb:Wc=1.0:0.4 to 0.6:0.2 to 0.3

[0148] Under the same condition, the proportion of luminance of the regular hexagonal light emitting source may be:

Wa:Wb:Wc=1.0:0.4 to 0.6:0.26 to 0.4

And that of the regular triangle light emitting source may be:

Wa:Wb:Wc=1.0:0.4 to 0.6:0.13 to 0.2

Embodiment 7

[0149] **FIG. 38** shows a top view illustrating a light emitting source array **75** according to Embodiment 7 of the present invention, wherein distribution of light intensity in a direction parallel to the side and distribution of light intensity in a diagonal direction are represented. As shown in **FIG. 38**, although light emitting sources **74** may be arranged with a space between each other, in which case a light emitting source having wide spread of outputted light (angle of beam spread) is used. And, as shown in **FIG. 38**, in a direction parallel to the side of the light emitting source **74**, respective light emitting sources **74** are arranged so that the position whose luminance is 0.5 times as much as the luminance Wa at the central part of the light emitting source **74** is located in the middle of a clearance between adjacent light emitting sources **74**. In addition, in the diagonal direction of the light emitting source **74**, respective light emitting sources **74** are arranged so that the position whose luminance is 0.25 times as much as the luminance Wa at the central part of the light emitting source **74** is located in the middle of a clearance between adjacent light emitting sources **74** in the diagonal direction. Arrangement of the light emitting sources **74** in this manner allows overall luminance of the light emitting source array **75** in which the light emitting sources **74** are arranged with a space therebetween to be equalized.

[0150] In addition, in the case of the light emitting source array in which regular hexagonal light emitting sources are arranged with a space therebetween, in the direction parallel to the side of the light emitting source, respective light emitting sources may be arranged so that the position whose luminance is 0.5 times as much as luminance Wa at the central part of the light emitting source is located in the middle of a clearance between adjacent light emitting sources. In addition, in the diagonal direction of the light emitting sources, respective light emitting sources may be arranged so that the position whose luminance is 0.33 times as much as luminance Wa at the central part of the light emitting sources is located in the middle of a clearance between adjacent light emitting sources in the diagonal direction.

[0151] Similarly, in the case of the light emitting source array in which regular triangle light emitting sources are arranged with a space therebetween, in the direction parallel to the side of the light emitting source, respective light emitting sources may be arranged so that the position whose luminance is 0.5 times as much as luminance Wa at the center of the light emitting source is located in the middle of a clearance between the adjacent light emitting sources. In addition, in the diagonal direction of the light emitting sources, respective light emitting sources may be arranged so that the position whose luminance is 0.17 times as much as luminance Wa at the central part of the light emitting sources is located in the middle of a clearance between adjacent light emitting sources in the diagonal direction.

[0152] In addition, if uniformity of luminance of the light emitting source array can be allowed up to +20%, the proportion of luminance (illuminance) Wa at the central part of the square light emitting source, luminance Wb' of individual light emitting sources in the middle of a clearance between the light emitting sources in the direction parallel to the side of the light emitting sources, and luminance Wc' in the middle of a clearance between the light emitting sources in the diagonal direction may be:

Wa:Wb':Wc'=1.0:0.4 to 0.6:0.2 to 0.3

[0153] Under the same condition, the proportion of luminance of the regular hexagonal light emitting source may be:

Wa:Wb':Wc'=1.0:0.4 to 0.6:0.26 to 0.4

And that of the regular triangle light emitting source may be:

Wa:Wb':Wc'=1.0:0.4 to 0.6:0.13 to 0.2

[0154] In addition, although circular, elliptical, regular octagonal light emitting sources may be used when the light emitting sources are arranged in spaced manner as with the embodiment, it would be desirable to arrange with a space therebetween using the light emitting sources that can be closely arranged, such as square, rectangle, regular hexagon, etc. in order to make the luminance of the light emitting source arrange uniform.

Embodiment 8

[0155] **FIG. 39** shows a sectional view of a backlight **76** (illumination system) that uses the light emitting source array of the present invention. This backlight **76** is comprised of the light emitting source array **77** of the invention contained in a casing **78**, the light emitting source array **77** being mechanically secured to the inside of the casing **78** by means of screws, etc. To improve light usability, a reflecting member or reflection sheet having good reflectivity may be affixed to the inner surface of the casing **78**. Such components for radiating heat as a heat sink or radiating fin may be attached to the rear surface of the casing **78**. Direct current is supplied to the light emitting source array **77** through wiring parts **79** such as a lead, a connector, a wiring board, etc. In addition, as many optical components **80**, **81** as necessary, such as a transparent plate, a diffusing plate, a prism sheet, a brightness enhancing film, etc. are installed in the interior or top surface of the casing **78**.

[0156] In addition, in this backlight **76**, height of the sidewall of the casing **78** and thickness of the optical component **81** are designed so that the target surface assumed in designing the light emitting source array **77** can match the outer surface of the outmost optical component **81**. Thus, in this backlight **76**, brightness or illuminance on the outer surface of the optical component **81** is uniform, and in the case of color (display), light of respective colors outputted from red, green and blue LEDs are uniformly mixed. Thus, this backlight **76** can be incorporated in equipment, with the outer surface of the optical component **83** matching the target surface of the equipment, which facilitates incorporation into various types of equipment.

Embodiment 9

[0157] **FIG. 40** shows a perspective view of an illumination system **82** for indoor lighting that utilizes the light emitting source array of the present invention. The illumination system **82** is comprised of the light emitting source array **83** of the present invention contained in the housing **84** to which a power supply unit **85** is attached. When the system is switched on by inserting a plug **86** from the power supply unit **85** into the outlet such as commercial power, alternating power supplied from the commercial power is converted into direct current, by which the light emitting source array **83** emits light. Thus, the illumination system **82** can be used for indoor illumination system of wall mount type, for instance.

What is claimed is:

1. A light emitting source, comprising:

a reflecting member having an optical axis and a surface for reflecting light and outputting the light forward,

a light guiding unit arranged on said reflecting surface of the reflecting member, and

light emitting devices for outputting light to the light guiding unit,

wherein the light emitting devices are arranged on an optical axis of the reflecting member,

the light guiding unit has a light irradiation surface that outputs to the external the light outputted from the light emitting devices and the light of the light emitting device reflected by the reflecting member,

a part of the light irradiation surface of the light guiding unit makes a predetermined angle with the optical axis, reflects the light outputted from the light emitting devices, and forms the light into a shape that can be oriented in a direction to the reflecting member, and

the reflecting member has in a part thereof a backward slope area that reflects the light reflected at a part of the light irradiation surface of the light guiding unit in a direction gradually having a larger angle away from the optical axis and orients the light to a periphery of the light guiding unit remote from the optical axis.

2. A light emitting source according to claim 1, wherein

the backward slope area of the reflecting member is inclined so as to edge away from the light irradiation surface of the light guiding unit as moving away from the light emitting devices.

3. A light emitting source according to claim 1, wherein

the light reflected at the backward slope area is guided to the periphery of the reflecting member by reflection at the light irradiation surface of the light guiding unit.

4. A light emitting source according to claim 1, wherein

the light reflected at the backward slope area is guided to the periphery of the reflecting member.

5. A light emitting source according to claim 1, wherein

the light emitting devices comprise more than one light emitting diodes having different luminous colors.

6. A light emitting source according to claim 1, wherein

an outline of the reflecting member viewed from the light irradiation direction is a square, rectangle, regular hexagon or regular triangle.

7. A light emitting source according to claim 1, wherein

an outline of the reflecting member viewed from the light irradiation direction is a circle or ellipse.

8. A light emitting source, comprising:

a reflecting member having an optical axis and surface for reflecting light and outputting the light forward,

a light guiding unit arranged on said reflecting surface of the reflecting member, and

light emitting devices for outputting light to the light guiding unit,

wherein the light emitting devices are arranged on an optical axis of the reflecting member,

the light guiding unit has a light irradiation surface that outputs to the external the light outputted from the light emitting devices and the light of the light emitting device reflected by the reflecting member,

the light irradiation surface has a first region that transmits the light emanating from the light emitting devices and outputs the light externally from the light guiding unit, a second region that reflects the light emanating from the light emitting device, orients the light in a direction to the reflecting member, and transmits the light reflected at the reflecting member and outputs the light externally from the light guiding unit, and a third region whose shape is defined so as to reflect with the first region the light that made a predetermined angle with the optical axis and was outputted from the light emitting device, orient the light to the reflecting member, and output the light reflected at the reflecting member externally from the light guiding unit.

9. A light emitting source according to claim 8, wherein

in the light irradiation surface of the light guiding unit, the channel is provided between the first region and the second region, the third region is formed on the inclined side on the inner circumferential side of the channel, and the light outputted from the light emitting devices is reflected in the third region and then guided to the reflecting member by being reflected in the first region.

10. Alight emitting source according to claim 8, wherein

in the light irradiation surface of the light guiding unit, not only the channel is provided between the first region and the second region, but also a conically-shaped depression is formed in the first region, the third region is formed in the inclined side on the inner circumfer-

ential side of the channel and the side of the depression, and the light outputted from the light emitting devices is reflected in the third region on the depression and then reflected in the first region, and then guided to the reflecting member by being further reflected in the third region on the side of the channel.

11. A light emitting source according to claim 8, wherein

the third region is such arranged that the light outputted from the light emitting devices with a smaller output angle than a critical angle of total reflection on the interface of the light guiding unit is reflected at the third region and then guided to the reflecting member.

12. A light emitting source according to claim 8, wherein

the first region protrudes more into the light irradiation side than the surrounding region thereof, and the outer perimeter of the first region is chamfered.

13. A light emitting source according to claim 8, wherein

the first region is comprised of a curved surface.

14. A light emitting source according to claim 1, wherein

the shape of the reflecting member is such configured that the light outputted from the light irradiation surface after being reflected at the reflecting member converges.

15. A light emitting source according to claim 1, wherein

around the light emitting devices is provided a member for limiting an output angle of light to be outputted from the light emitting device.

16. A light emitting source array in which a plurality of light emitting sources are arranged:

the light emitting source, comprising:

a reflecting member for reflecting light and outputting the light forward,

a light guiding unit arranged on the side of a light reflecting surface of the reflecting member, and

light emitting devices for outputting light to the light guiding unit,

wherein the light irradiation surface of the light guiding unit has a first region that transmits the light emanating from the light emitting devices and outputs the light externally from the light guiding unit, a second region that reflects the light emanating from the light emitting device, orients the light in a direction to the reflecting member, and transmits the light reflected at the reflecting member and outputs the light externally from the light guiding unit, and a third region whose shape is defined so as to reflect with the first region the light that made a predetermined angle with the optical axis and was outputted from the light emitting device, orient the light to the reflecting member, and output the light reflected at the reflecting member externally from the light guiding unit.

17. A light emitting source array according to claim 16, wherein

the light emitting sources are closely arranged.

18. A light emitting source array according to claim 16, wherein

the light emitting sources are arranged with a space therebetween.

19. A method of setting an optical path of light to be outputted from a light emitting source comprising a reflecting member for reflecting light, a light guiding unit arranged on the side of a light reflecting surface of the reflecting member, and light emitting devices for outputting light to the light guiding unit, a method of setting optical path in the light emitting source, wherein

the light emitting devices are arranged on the optical axis of the reflecting member,

the surface of the light guiding unit outputs to the external the light outputted from the light emitting devices and the light of the light emitting devices reflected at the reflecting member,

a part of the surface of the light guiding unit, after total reflecting the light outputted from the light emitting devices, total reflects the light with another part of the surface of the light guiding unit and orients the light to the direction to the reflecting member,

shapes and a positional relation of the reflecting member, the light guiding unit and the light emitting devices are such defined that a part of the reflecting member reflects the light total reflected at the part of the light irradiation surface of the light guiding unit in a direction being gradually away from the optical axis, and orients the light to the periphery of the light guiding unit remote from the optical axis.

20. A method of outputting light to be outputted from a light emitting source comprising a reflecting member for reflecting light, a light guiding unit arranged on the side of a light reflecting surface of the reflecting member, and light emitting devices for outputting light to the light guiding unit, a method of outputting light in the light emitting source, wherein:

the light emitting devices are arranged on the optical axis of the reflecting member,

a part of the surface of the light guiding unit outputs to the external the light outputted from the light emitting devices,

another part of the surface of the light guiding unit, after reflecting the light outputted from the light emitting devices, reflects the light with yet another part of the surface of the light guiding unit, and orients the light to the reflecting member,

a part of the reflecting member reflects the light total reflected at the part of the light irradiation surface of the light guiding unit in a direction gradually having a larger angle away from the optical axis, and orients the light to a periphery of the light guiding unit remote from the optical axis,

shapes and a positional relation of the reflecting member, the light guiding unit and the light emitting devices are defined such that another part of the reflection plate further reflects the light reflected at the yet another part of the optical waveguide surface and outputs the light externally from the surface of the optical waveguide.

21. An illumination system, comprising:

a light emitting source array in which a plurality of light emitting sources are arranged, and

a power supply unit for supplying power to the light emitting source array,

the light emitting source, comprising:

a reflecting member for reflecting light and outputting the light forward,

a light guiding unit arranged on the side of a light reflecting surface of the reflecting member, and

light emitting devices for outputting light to the light guiding unit,

wherein the light irradiation surface of the light guiding unit has a first region that transmits the light emanating from the light emitting devices and outputs the light externally from the light guiding unit, a second region that reflects the light emanating from the light emitting device, orients the light in a direction to the reflecting member, and transmits the light reflected at the reflecting member and outputs the light externally from the light guiding unit, and a third region whose shape is defined so as to reflect with the first region the light that made a predetermined angle with the optical axis and was outputted from the light emitting device, orient the light to the reflecting member, and output the light reflected at the reflecting member to the external of the light guiding unit.

22. A liquid crystal display system, comprising:

a light emitting source array in which a plurality of light emitting sources are arranged, and

a liquid crystal display panel arranged opposite to the light emitting source array,

the light emitting source, comprising:

a reflecting member for reflecting light and outputting the light forward,

a light guiding unit arranged on the side of a light reflecting surface of the reflecting member, and

light emitting devices for outputting light to the light guiding unit,

wherein the light irradiation surface of the light guiding unit has a first region that transmits the light emanating from the light emitting devices and outputs the light externally from the light guiding unit, a second region that reflects the light emanating from the light emitting device, orients the light in a direction to the reflecting member, and transmits the light reflected at the reflecting member and outputs the light externally from the light guiding unit, and a third region whose shape is defined so as to reflect with the first region the light that made a predetermined angle with the optical axis and was outputted from the light emitting device, orient the light to the reflecting member, and output the light reflected at the reflecting member externally from the light guiding unit.

* * * * *