Publication

Description of Utility Model Patent

(Please do not alter the format, order and bolded words of the subject Description. Please do not fill the parts marked with ※)

※ **Application No.:** 93218806

※ **Filing Date:** November 23, 93rd Year of the Republic

※ **IPC Classification:** G02F 1/1333

I **Title of the Utility Model:** (Chinese/ English)

DIRECT TYPE BACKLIGHT MODULE/ DIRECT TYPE BACKLIGHT MODULE

II **Applicant:** (1 Applicant in total)

Name or Title (Chinese/ English)

CORETRONIC CORPORATION/ CORETRONIC CORPORATION

Representative: (Chinese/ English) Wade CHANG/ Wade CHANG

Residence or Business Address: (Chinese/ English)

No. 2, Ke Bei Rd 5, Science Park, Chu-Nan, Miao Li County, Taiwan 350, R. O. C./ No. 11, Ke Bei Rd 5, Science Park, Chu-Nan, Miao Li County, Taiwan 350, R. O. C.

Nationality: (Chinese/ English) Republic of China (TW)

III **Inventor:** (1 Inventor in total)

Name: (Chinese/ English)

Ming-Hsien SU/ Ming-Hsien SU

Nationality: (Chinese/ English)

Republic of China (TW)

IV. Statements:

☐ Claim the facts stipulated in Article 94.2 ☐ Part 1 or ☐ Part 2, the facts occur on the date of: Year Month Day.

☐ Prior to this application, a patent application was filed in the following countries (regions):

[Please follow the formatting sequence of: acceptance country (region), filing date, application number]

☐ Claim the international priority under Article 27.1 of the Patent Law applicable mutatis mutandis to Article 108 of the Patent Law:

☐ Do not claim the international priority under Article 27.1 of the Patent Law applicable mutatis mutandis to Article 108 of the Patent Law:

☐ Claim the domestic priority under Article 29.1 of the Patent Law applicable mutatis mutandis to Article 108 of the Patent Law:

[Please follow the formatting sequence of: filing date, application number]

V. Abstract of the Utility Model in Chinese:

A direct type backlight module comprises a base plate, a reflector, a light-emitting component and a diffusion sheet. The base plate includes at least one fin and is covered with the reflector. The reflector forms a convex region along the surface of the base plate and of the fin. The light-emitting component is located in a relative concave region at the side of the convex region. The diffusion sheet is located on the light-emitting component to diffuse the light which is emitted from the light-emitting component. The thermal which is transferred from the light-emitting component to the convex region of the reflector is transferred to the base plate via the fin.

VI. Abstract of the Utility Model in English:

A direct type backlight module comprises a base plate, a reflector, a light-emitting component and a diffusion sheet. The base plate includes at least one fin and is covered with the reflector. The reflector forms a convex region along the surface of the base plate and of the fin. The light-emitting component is located in a relative concave region at the side of the convex region. The diffusion sheet is located on the light-emitting component to diffuse the light which is emitted from the light-emitting component. The thermal which is transferred from the light-emitting component to the convex region of the reflector is transferred to the base via the fin.

VII. Designated representative figure:

(I) The designated representative figure of the present application is: FIG. (3).

(II) Brief description of the element symbols shown in the representative figure:

30 direct type backlight module	322 concave region
31 base plate	33 light-emitting component
311 fin	34 diffusion sheet
32 reflector	35 through hole
321 convex region	

IIX: Description of the utility model:

[Technical Field]

The present utility model relates to a direct type backlight module, and in particular to a direct type backlight module suitable for large-size displays.

[Background Art]

The liquid crystal display (LCD) technology is not only used in portable electronic products such as laptops, mobile phones, digital cameras, camcorders, PDAs, but has also been widely used in large-size LCD displays. The LCD panel is a key display component, but it does not emit light by itself and requires a backlight to display.

The commonly used backlight technology can be roughly divided into side type backlight modules and direct type backlight modules. The difference between the two is that the side type backlight module uses a light guide plate to guide the light from its end surface to its front surface through partial reflection and partial refraction; whereas the direct type backlight module uses a diffuser to evenly disperse the light from multiple direct type line light sources to reduce the generation of light and dark stripes. Considering the high brightness requirements of large-size (about 20 inches or more) LCD products, direct type backlight modules with higher luminous efficiency and more tubes are often used as the backlight source of the LCD panel. Although multiple tubes can improve the brightness of the LCD, the heat energy generated is also relatively high. Liquid crystal molecules and photoresist materials with high temperature sensitivity are prone to cause color changes at high temperatures. Therefore, improving the heat dissipation efficiency of the backlight module has always been one of the goals that research and development personnel have been working on.

Referring to FIG. 1, it is a schematic side cross-sectional view of a conventional direct type backlight module. A conventional direct-type backlight module 10 is disposed directly below a display panel 20 and usually is composed of a base plate 11, a reflector 12, a light-emitting component 13, a diffusion sheet 14 and an optical film 15 on it. In addition, it has a first chamber 16 and a second chamber 17. As shown in the figure, the base plate 11 is located at the bottom of the conventional direct type backlight module 10, and its material has sufficient support strength and heat conduction properties. The

reflector 12 is attached on the base plate 11, and the reflector 12 is folded into a continuous convex region 121. The first chamber 16 is formed between the convex region 121 and the base plate 11. The light-emitting component 13 is disposed between the convex region 121 and a side wall 111 or between two adjacent convex regions 121. The light-emitting component 13 is composed of a plurality of cold cathode ray tubes arranged in parallel with each other. The diffusion sheet 14 is located above the light-emitting component 13, and the second chamber 17 is formed between the two. The diffusion sheet 14 is disposed between the light-emitting component 13 and the display panel 20 and can diffuse the light from below to provide the display panel 20 with more uniformly dispersed light. A plurality of layers of optical films 15 are usually laid on the diffusion sheet 14, such as a lower diffusion sheet, a lower light-enhancing sheet, an upper light-enhancing sheet, and an upper diffusion sheet placed in order from bottom to top to increase the light uniformity of the entire display product and brightness. The "display panel 20" referred to herein is at least composed of an upper substrate 21 and a lower substrate 22. The surfaces of the two substrates have components (not shown) required to form a pixel array, such as filters, thin film transistors and various electrodes. When the two substrates are paired up and down, the above elements form a complete pixel array to control the passage of light so as to achieve the purpose of display.

Referring to FIG. 2, it is a perspective view of the internal structure of the second chamber 17 in FIG. 1. The light-emitting component 13 is located outside the convex region 121 of the reflector 12. Below the convex region 121 is a flat base plate 11. Therefore, at least half of the area of the reflector 12 cannot contact the base plate 11 to conduct the heat generated by the light-emitting component 13. From the above description, it can be seen that the above-mentioned direct type backlight module has the following shortcomings:

1. In order to meet the requirements of high brightness and lightweight, light-emitting component in the above-mentioned direct type backlight module is often installed in a narrow closed space (the second chamber 17 shown in FIG. 1). Therefore, the heat generated during operation often cannot be dissipated efficiently and thus accumulates continuously. Once the operation time is slightly longer, it is easy to cause the temperature near the light tube to be too high. This will not only affect the normal

operation of the display panel, but also cause a reduction in display quality (for example, a decrease in brightness), and can easily and significantly reduce the service life of surrounding components.

2. The first chamber 16 shown in FIG. 1 forms an air barrier between the convex region 121 and the base plate 11. This not only causes heat accumulation, but also reduces the contact area between the reflector and the base plate, reducing the heat dissipation effect.

3. The purpose of folding the reflector into the convex region is to enhance the reflection effect. However, if the number of the convex regions is large, the reflector must be repeatedly bent, making processing difficult.

Therefore, the following becomes one of the important issues faced by current backlight module technology: how to improve the heat dissipation capacity of the backlight module to comply with the dual trends of 1) increasing size of display products; 2) increasing display brightness requirements, so that the backlight module can accommodate more light tubes while improving the display quality and component service life problems caused by the above-mentioned poor heat dissipation effect.

In order to solve the above problems, the direct type backlight module proposed by the present utility model uses structures such as through holes and fins to enhance heat convection and heat conduction to solve the problem of poor heat dissipation of conventional direct type backlight modules. Moreover, the reflector can naturally form a convex region as long as it is covered along the surface of the fin, thus simultaneously solving the above-mentioned problem of difficulty in processing.

[Summary of the Utility Model]

The main object of the present utility model is to provide a direct type backlight module that adds a fin structure to the base plate and increases the heat conduction area by contacting the fin surface with the reflector.

Another object of the present utility model is to provide a direct type backlight module that adds a through hole structure on the base plate to enhance heat convection.

Yet another object of the present utility model is to provide a direct type backlight module that can eliminate the processing step of folding the reflector into a convex region.

The present utility model provides a direct type backlight module, which includes a base plate, a reflector, a light-emitting component and a diffusion sheet. The base plate surface has at least one fin. The reflector is covered on the base plate and forms a convex region along the surface of the fin and the base plate. In order to achieve the purpose of heat dissipation, the convex region must be kept in contact with the surface of the fin. The light-emitting component is located in a relative concave region at the side of the convex region; the heat energy generated during the light-emitting process thereof can be efficiently transferred to the outside by increasing the heat dissipation area of the base plate via the contact between the base plate and the reflector, as well as the contact between the convex region and the surface of the fin. In addition, in order to scatter the light evenly, a diffusion sheet is added above the structure shown in the figure. The shape of the above-mentioned fin is not particularly limited herein. The materials of the fin and the base plate only need to be materials with high thermal conductivity. It is worth mentioning that the reflector is covered along the surface of the fin and the base plate to form the convex region, thereby eliminating the trouble of separately processing and folding the reflector into a convex region.

The direct type backlight module of the present utility model can be applied to a display device. The display device at least includes a casing, a display panel and a backlight module as described above. The backlight module can prevent the temperature near the light-emitting component from being too high, thereby maintaining the normal operation of the display panel, and extend the service life of the components.

[Description of the Embodiments]

The “direct type backlight module” of the present utility model adds structures such as through holes and fins on the base plate to solve the main problem of poor heat dissipation. In addition, the reflector can naturally form a convex region as long as it is covered along the surface of the fin and the base plate. Therefore, the manufacturing difficulty of processing the reflector to form a convex region is also solved. The present utility model will be described in detail below with the drawings, and preferred embodiments will be listed as follows:

Referring FIG. 3, it is a perspective view of the direct type backlight module of the present utility model. The direct type backlight module 30 includes a base plate 31, a reflector 32 , a light-emitting component 33 and a diffusion sheet 34. The difference between the present utility model and the conventional direct type backlight module is as follows: the base plate 31 includes at least one fin 311, and the surface of the fin 311 forms an inclination angle with the surface of the base plate 31. The reflector 32 covers the base plate 31 and forms a convex region 321 along the surface of the fin 311 and the base plate 31. In order to achieve the purpose of heat dissipation, the convex region 321 must be kept in contact with the surface of the fin 311. The degree of inclination of the fin 311 can be determined based on the size of the above-mentioned inclination angle, and the distance between the top and the bottom of the convex region 321 can be further adjusted. The light-emitting component 33 is disposed on the reflector 32 to provide a light source. The heat energy generated during the light-emitting process thereof can be efficiently transferred to the outside by increasing the heat dissipation area of the base plate via the contact between the base plate and the reflector, as well as the contact between the convex region and the surface of the fin. In addition, in order to scatter the light evenly, a diffusion sheet 34 is added above the structure as shown in the figure.

Still referring to FIG. 3, the present utility model can select a cold cathode ray tube or a light emitting diode (LED) as the light-emitting component 33, which are applicable to various embodiments described below. The light-emitting component 33 is provided in a relative concave region 322 at the side of the convex region 321. The convex region 321 is located between two concave regions 322. The convex region 321 can further fully fit the surface of the fin 311 to fully utilize the conductive area thereof. The shape of the fins 311 is not particularly limited, for example, it can be rectangular or trapezoidal. The materials of the fin 311 and the base plate 31 can be aluminum, magnesium, copper, titanium, silver or alloys thereof, or can also be polymer composite materials. It is worth mentioning that the reflector 32 is covered along the surfaces of the fin 311 and the base plate 31 to form the convex region 321, which eliminates the need to separately process and fold the reflector 32 into the convex region 321. In addition, the fin 311 is punched out of the base plate 31 and folded up from the base plate 31, and a through hole 35 is formed at the punched position on the base plate 31. The edge of the

fin 311 is connected to the edge of the through hole 35, and the through hole 35 improves the convection of air inside and outside the backlight module 30 to enhance the heat dissipation effect.

Referring to FIG. 4A, it is a perspective view of a direct type backlight module base plate with rectangular fins. The fins shown in the figure include at least one forward fin 311a and at least one reverse fin 311b. The forward fin 311a is folded from the base plate 31A in a clockwise direction. The reverse fin 311b is folded from the base plate 31A in a counterclockwise direction. The base plate 31A has a first through hole 312a and a second through hole 312b. Part of the hole edge of the first through hole 312a is connected to the edge of the forward fin 311a, Part of the edge of the second through hole 312b is connected to the edge of the reverse fin 311b. The forward fin 311a and the reverse fin 311b are parallel to the light-emitting component 33 and are arranged staggered with each other. The base plate 31A can be formed with the first through hole 312a and the forward fin 311a at the same time using a general stamping method. The first through hole 312a is formed in the same shape as the forward fin 311a and is integrally formed. The second through hole 312b and the reverse fin 311b can also be made in the same way. Referring to FIG. 4B, it shows an embodiment of trapezoidal fins 311A and 311B.

Referring to FIG. 5A, it is a perspective view of another type of base plate of the direct type backlight module of the present utility model. A base plate 31a includes an upper base plate 31b and a lower base plate 31c. The upper base plate 31b has a forward fin 311a connected to the edge of a first through hole 312a. The lower base plate 31c has a reverse fin 311b connected to the edge of a second through hole (not shown). For more details, please refer to FIG. 5B, which is a side cross-sectional view of the AA section in FIG. 5A. When the upper base plate 31b and the lower base plate 31c are stacked up and down, the reverse fin 311b passes through the first through hole 312a, In this case, the first through hole 312a and the second through hole 312b overlap, and the two fins 311a and 311b together form a convex structure 36. A peak portion 361 of the convex structure 36 is largely enclosed. The upper base plate 31b, the lower base plate 31c, the forward fin 311a and the reverse fin 311b are all made of materials with high heat transfer coefficients. A reflector is covered on the structure shown in FIG. 5A to form a convex

region, and then a light-emitting component is placed in a relative concave region at the side of the convex region, and a diffusion sheet is covered on the reflector so as to complete a backlight module.

Referring to FIG. 6, it is a cross-sectional view of a display device using the direct type backlight module of the present utility model. A display device 40 includes a casing 41, a display panel 20, and the backlight module 30 as shown in FIG. 3. The display panel 20 and the backlight module 30 are disposed inside the casing 41. The display panel 20 is composed of a filter plate 21 and a transistor plate 22. The transistor plate 22 is arranged parallel to the filter plate 21 and maintains a distance therebetween. As described in the background art, the elements of the filter plate 21 and the transistor plate 22 are arranged into a pixel array (not shown). Taking a liquid crystal display as an example, the pixel array is composed of a plurality of filter material layers 23, a plurality of thin film transistors 24, a transparent electrode 25 and a liquid crystal layer 26. The backlight module 30 is disposed under the display panel 20. Its overall structure is shown in FIG. 3, and it has a base plate form as shown in FIG. 4A-4B or FIG. 5A to enhance the heat dissipation effect thereof.

The backlight module provided by the present utility model has the following features and advantages when compared with conventional technologies:

1. The fin on the base plate (referring to FIG. 4A-4B and FIG. 5A) are easy to make by punching and molding. Therefore, the reflector only needs to be covered thereon to form the required convex region, thereby eliminating the trouble of separately folding the reflector into the convex region.

2. The height of the convex region can be adjusted by the inclination angle between the fin surface and the base plate surface.

3. The larger the fin area and the larger the contact area with the convex region, the greater the heat dissipation area to facilitate conduction of the heat source to the base plate for heat dissipation.

4. There are through holes on the base plate to increase heat convection and facilitate heat dissipation.

In summary, the present utility model is not only innovative in terms of technical ideas, but also can improve the above-mentioned effects compared with conventional

methods. It should fully meet the statutory requirements on novelty and inventive step for a utility model patent. The above detailed description is a specific description of the preferred embodiments of the present utility model. However, the above embodiments are not intended to limit the patent scope of the present utility model. Any equivalent implementation or modification that does not depart from the principles of the present utility model shall be included in the patent scope of the present utility model.

[Brief Description of the Drawings]

The preferred embodiments of the present utility model will be described in detail in the following descriptions with the following figures:

FIG. 1 is a schematic side cross-sectional view of a conventional direct type backlight module.

FIG. 2 is a perspective view of the internal structure of the second chamber in FIG. 1.

FIG. 3 is a perspective view of the direct type backlight module of the present utility model.

FIG. 4A is a perspective view of the base plate of the direct type backlight module with rectangular fins.

FIG. 4B is a perspective view of the base plate of the direct type backlight module with trapezoidal fins.

FIG. 5A is a perspective view of another base plate of the direct type backlight module of the present utility model.

FIG. 5B is a side cross-sectional view of another base plate of the direct type backlight module of the present utility model.

FIG. 6 is a cross-sectional view of a display device using the direct type backlight module of the present utility model.

[Description of the symbols of main elements]

10 conventional direct type backlight module	31A, 31a base plate
11 base plate	31b upper base plate
111 side wall	31c lower base plate

12	reflector	311	fin
121	convex region	311a	forward fin
13	light-emitting component	311A	forward fin (trapezoidal)
14	diffusion sheet	311b	reverse fin
15	optical film	311B	reverse fin (trapezoidal)
16	first chamber	312a	first through hole
17	second chamber	312b	second through hole
20	display panel	32	reflector
21	upper substrate (filter plate)	321	convex region
22	lower substrate (transistor plate)	322	concave region
23	filter material layer	33	light-emitting component
24	thin film transistor	34	diffusion sheet
25	transparent electrode	35	through hole
26	liquid crystal layer	36	convex structure
30	direct type backlight module	361	peak portion
31	base plate	40	display device
		41	casing

IX. Claims:

1. A direct type backlight module, comprising:

a base plate, which comprises at least one fin;

a reflector, which is covered on the base plate and forms a convex region along the base plate and the fin;

a light-emitting component, which is located in a relative concave region at the side of the convex region; and

a diffusion sheet , which is located above the light-emitting component to scatter light from the light-emitting component.

2. The backlight module according to claim 1, wherein the fin is punched out of the base plate and folded up from the base plate, and a through hole is formed at a punched portion of the base plate.

3. The backlight module according to claim 2, wherein the at least one fin comprises at least one forward fin and at least one reverse fin, the forward fin is folded up from the base plate in a clockwise direction, and the reverse fin is folded up from the base plate in a counterclockwise direction.

4. The backlight module according to claim 3, wherein the at least one forward fin and the at least one reverse fin are arranged parallel to the light-emitting component.

5. The backlight module according to claim 4, wherein the at least one forward fin and the at least one reverse fin are arranged in a staggered manner.

6. The backlight module according to claim 1, wherein the fin shape can be one of rectangular and trapezoidal.

7. The backlight module according to claim 1, wherein the base plate comprises an upper base plate and a lower base plate, the fins comprise a forward fin and a reverse

fin, the upper base plate has the forward fin and a through hole, the lower base plate has the reverse fin, and the reverse fin passes through the through hole to form a convex structure with the forward fin.

8. The backlight module according to claim 7, wherein a peak portion of the convex structure is largely enclosed.

9. The backlight module according to claim 7, the forward fin is folded from the upper base plate, and a folded position thereof is located on one side of the through hole.

10. The backlight module according to claim 1, wherein the base plate is made of a material with a high heat transfer coefficient.

11. The backlight module according to claim 1, wherein the light-emitting component is a cold cathode ray tube.

12. The backlight module according to claim 1, wherein the light-emitting component is a light emitting diode (LED).

13. The backlight module according to claim 1, wherein the convex region of the reflector is in contact with an upper surface of the fin, and heat transferred from the light-emitting component to the convex region is further transferred to the fin.

14. A display device, comprising:

a display panel;

a direct type backlight module, which can provide a light source needed by the display panel, the backlight module comprising:

a base plate, which comprises at least one fin;

a reflector, which is covered on the base plate and forms a convex region along the base plate and the fin;

a light-emitting component, which is located in a relative concave region at the side of the convex region; and

a diffusion sheet , which is located above the light-emitting component to scatter light from the light-emitting component;

wherein the convex region of the reflector is in contact with an upper surface of the fin, and heat transferred from the light-emitting component to the convex region is further transferred to the fin.

15. The display device according to claim 14, wherein the fin is punched out of the base plate and folded up from the base plate, and a through hole is formed at a punched portion of the base plate.

16. The display device according to claim 15, wherein the at least one fin comprises at least one forward fin and at least one reverse fin, the forward fin is folded up from the base plate in a clockwise direction, and the reverse fin is folded up from the base plate in a counterclockwise direction.

17. The display device according to claim 16, wherein the at least one forward fin and the at least one reverse fin are arranged parallel to the light-emitting component.

18. The display device according to claim 17, wherein the at least one forward fin and the at least one reverse fin are arranged in a staggered manner.

19. The display device according to claim 14, wherein the base plate comprises an upper base plate and a lower base plate, the fins comprise a forward fin and a reverse fin, the upper base plate has the forward fin and a through hole, the lower base plate has the reverse fin, and the reverse fin passes through the through hole to form a convex structure with the forward fin.

20. The display device according to claim 19, the forward fin is folded from the upper base plate, and a folded position thereof is located on one side of the through hole.

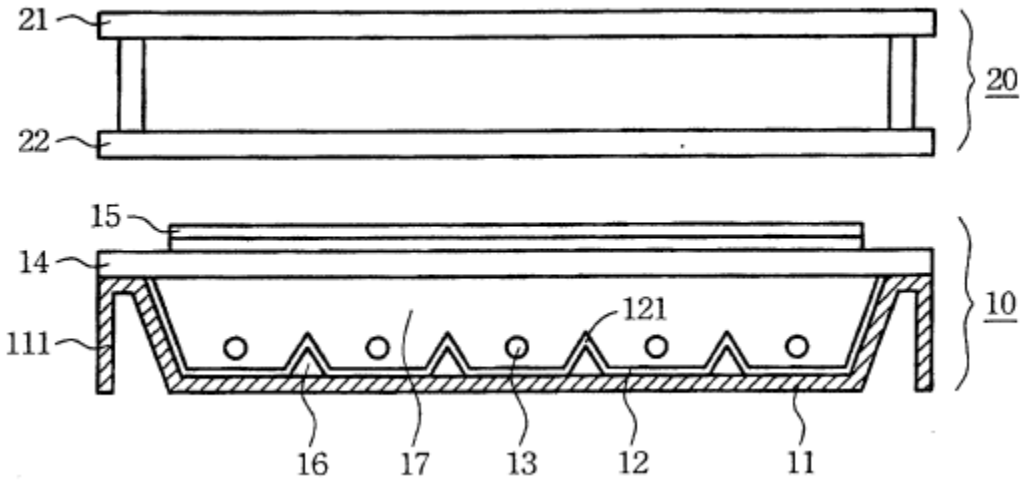

FIG. 1

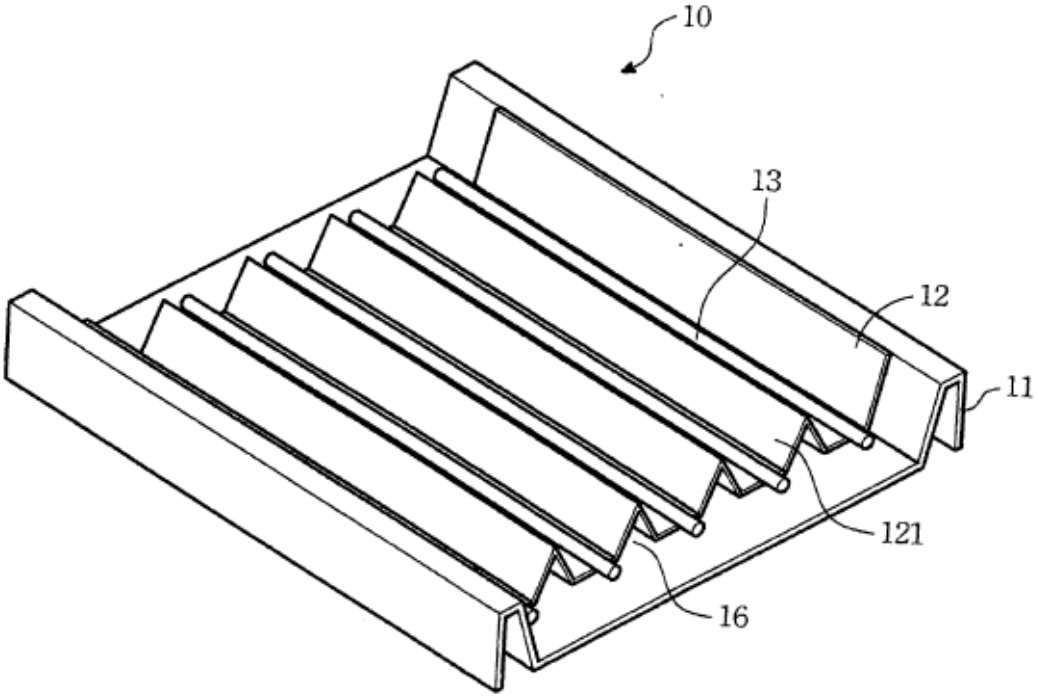

FIG. 2

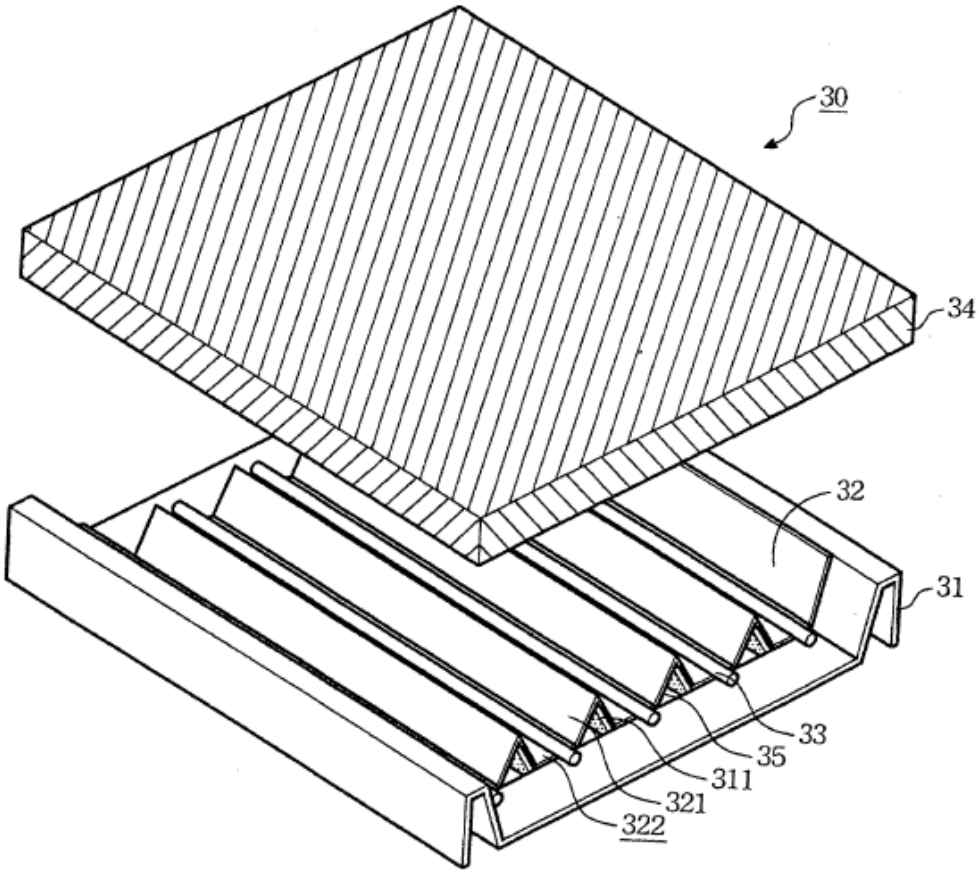

FIG. 3

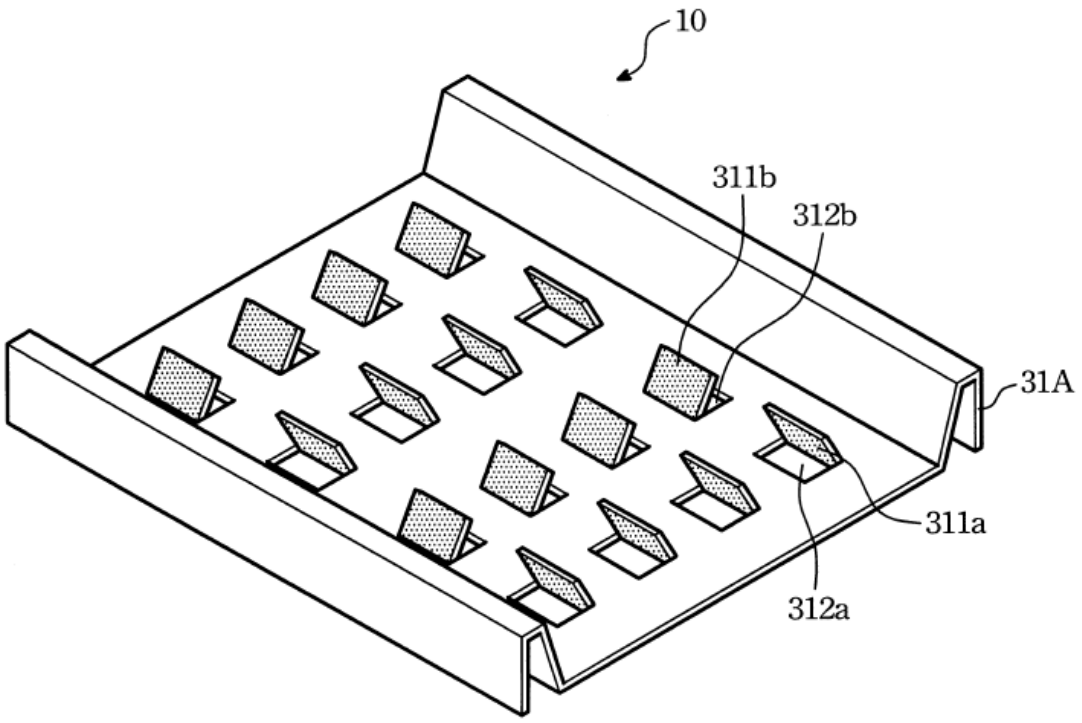

FIG. 4A

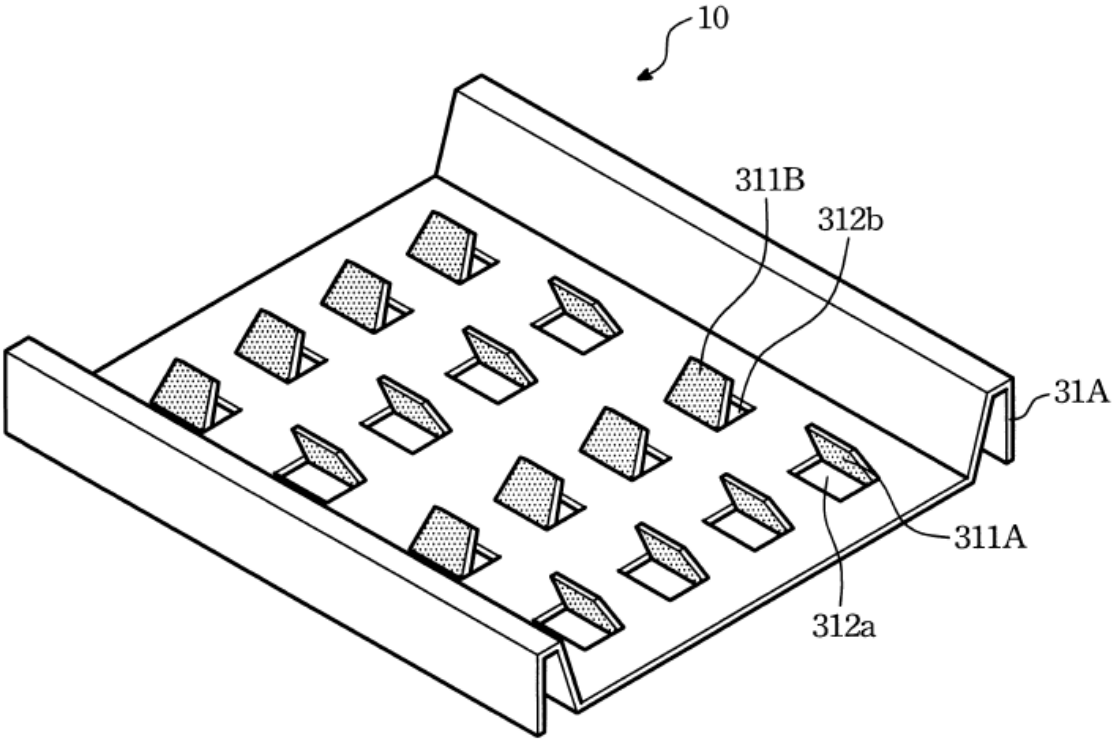

FIG. 4B

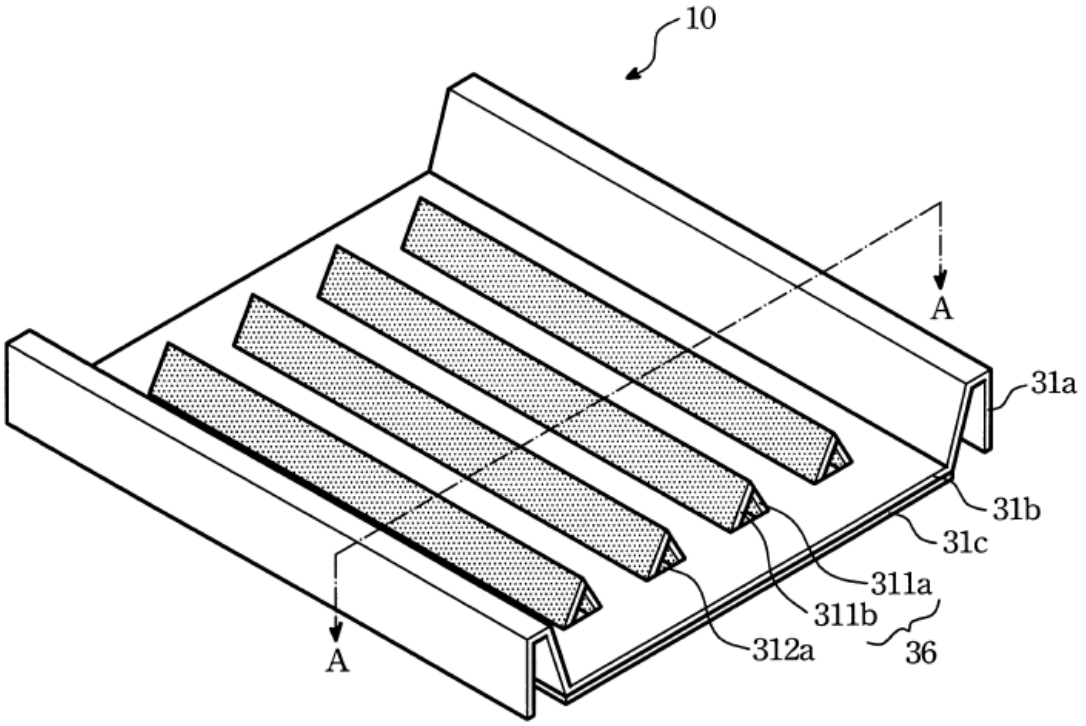
10
A
31a
31b
31c
311a
311b
312a
36
A

FIG. 5A

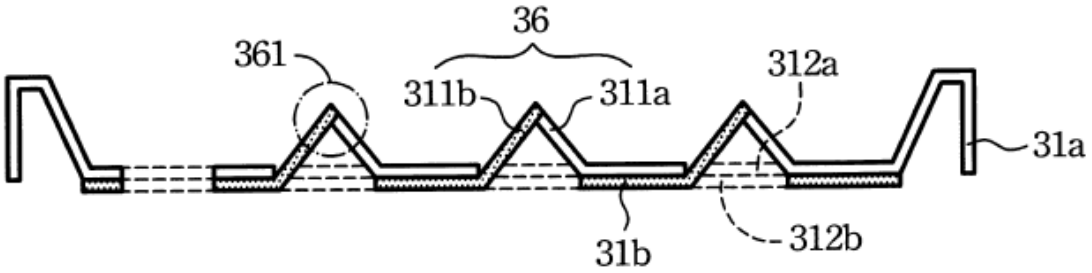
36
361
311b
311a
312a
31a
31b
312b

FIG. 5B

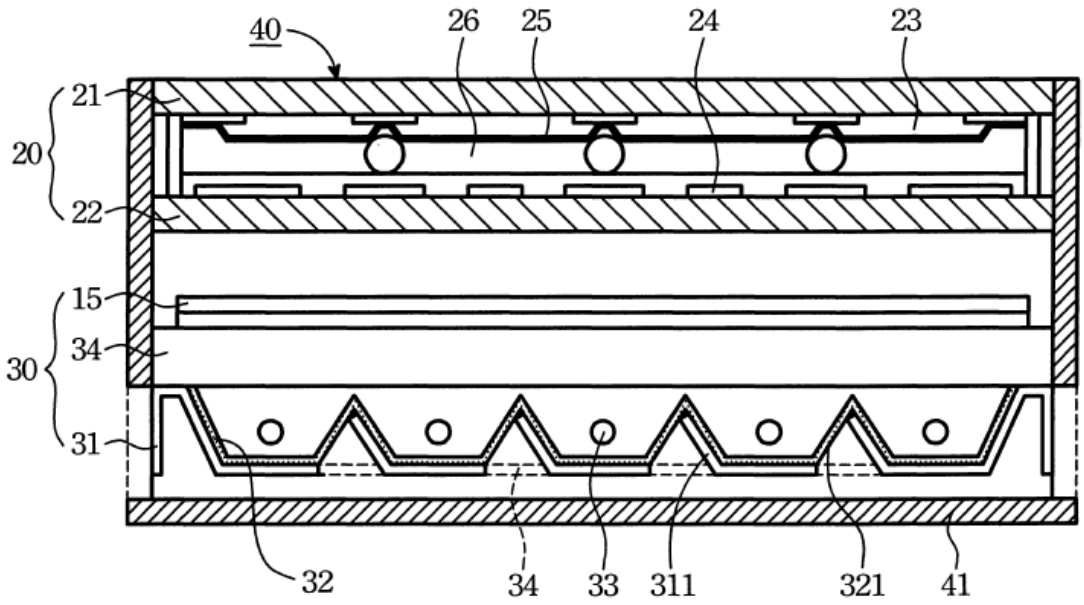

FIG. 6

Questel

CERTIFICATE OF TRANSLATION

Questel-Orbit, Incorporated
2331 Mill Road, Suite 600
Alexandria, VA 22314, U.S.A.
www.questel.com

Client Name: **Kilpatrick, Townsend & Stockton LLP**
Source Language: **Chinese**
Target Language: **English**
Project Number: **KTS2430015UT-LZ_Q**

The document identified below was translated by Questel-Orbit, Incorporated, through its translation subsidiary MultiLing Corporation or Morningside Translations, LLC. On behalf of the translating entity, the undersign certifies the following:

1) it is a professional translation company of multiple languages, including the source and target languages noted above;
2) to the best of its knowledge, information, and belief, the translated document is accurate as a publication quality translation; and
3) the above statements were made with the knowledge that willful false statements are punishable by fine or imprisonment under Section 1001 of Title 18 of the United States Code.

Original Document Identifier: D13-TWM273011U.pdf
Translated Document Identifier: D13-TWM273011U_en-US.docx, D13-TWM273011U_en-US.pdf

Signed this 15th day of July 2024

Beverly Santamaria

Name: Beverly Santamaria
Title: Project Manager