US009283674B2

(12) **United States Patent**
Hoffman et al.

(10) **Patent No.: US 9,283,674 B2**
(45) **Date of Patent: Mar. 15, 2016**

(54) **REMOTELY OPERATING A MOBILE ROBOT**

(71) Applicant: **iRobot Corporation**, Bedford, MA (US)

(72) Inventors: **Orin P. F. Hoffman**, Somerville, MA (US); **Peter Keefe**, Freemont, NH (US); **Eric Smith**, Stow, MA (US); **John Wang**, Andover, MA (US); **Andrew Labrecque**, Maynard, MA (US); **Brett Ponsler**, Worcester, MA (US); **Susan Macchia**, Bedford, MA (US); **Brian J. Madge**, Charlestown, MA (US)

(73) Assignee: **iRobot Corporation**, Bedford, MA (US)

(*) Notice: Subject to any disclaimer, the term of this patent is extended or adjusted under 35 U.S.C. 154(b) by 0 days.

(21) Appl. No.: **14/507,653**

(22) Filed: **Oct. 6, 2014**

(65) **Prior Publication Data**

US 2015/0190925 A1 Jul. 9, 2015

Related U.S. Application Data

(60) Provisional application No. 61/924,433, filed on Jan. 7, 2014.

(51) **Int. Cl.**

G05B 19/04	(2006.01)
B25J 9/16	(2006.01)
B25J 19/02	(2006.01)
B25J 5/00	(2006.01)
B25J 13/00	(2006.01)

(Continued)

(52) **U.S. Cl.**

CPC ***B25J 9/161*** (2013.01); ***B25J 5/005*** (2013.01); ***B25J 5/007*** (2013.01); ***B25J 9/1671*** (2013.01); ***B25J 9/1697*** (2013.01); ***B25J 13/006*** (2013.01); ***B25J 13/025*** (2013.01); ***B25J 13/06*** (2013.01); ***B25J 19/021*** (2013.01); *Y10S 901/47* (2013.01)

(58) **Field of Classification Search**

CPC B25J 9/161; B25J 5/005; B25J 5/007; B25J 9/1697; B25J 13/006; B25J 13/025; B25J 13/06

USPC 700/257

See application file for complete search history.

(56) **References Cited**

U.S. PATENT DOCUMENTS

4,794,534	A	12/1988	Millheim
5,179,843	A	1/1993	Cohausz

(Continued)

OTHER PUBLICATIONS

"Tactical Robotic Controller," Qinetiq North America, Reston, VA (https://www.qinetiq-na.com/products/unmanned-systems/trc/.).

(Continued)

Primary Examiner — Ian Jen

(74) *Attorney, Agent, or Firm* — Honigman Miller Schwartz and Cohn LLP

(57) **ABSTRACT**

A method of operating a robot includes electronically receiving images and augmenting the images by overlaying a representation of the robot on the images. The robot representation includes user-selectable portions. The method includes electronically displaying the augmented images and receiving an indication of a selection of at least one user-selectable portion of the robot representation. The method also includes electronically displaying an intent to command the selected at least one user-selectable portion of the robot representation, receiving an input representative of a user interaction with at least one user-selectable portion, and issuing a command to the robot based on the user interaction.

32 Claims, 26 Drawing Sheets

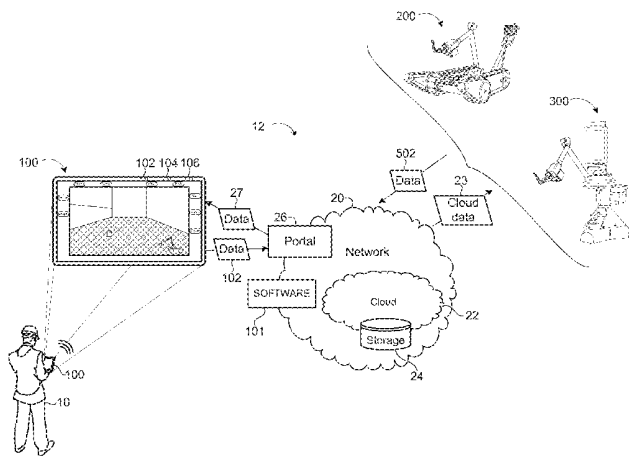

(51) **Int. Cl.**
B25J 13/02 (2006.01)
B25J 13/06 (2006.01)

(56) **References Cited**

U.S. PATENT DOCUMENTS

5,416,712 A 5/1995 Geier et al.
5,448,479 A 9/1995 Kemner et al.
6,108,031 A * 8/2000 King G05D 1/0038 348/118
6,120,025 A 9/2000 Hughes
6,122,572 A 9/2000 Yavnai
6,463,368 B1 10/2002 Feiten et al.
6,480,762 B1 11/2002 Uchikubo et al.
6,535,793 B2 * 3/2003 Allard B25J 9/1689 318/628
6,580,979 B2 6/2003 Payton et al.
6,675,068 B1 1/2004 Kawasaki
6,748,297 B2 6/2004 Song et al.
6,778,097 B1 8/2004 Kajita et al.
6,845,297 B2 * 1/2005 Allard B25J 9/1689 318/628
6,957,712 B2 10/2005 Song et al.
6,980,940 B1 12/2005 Gurpinar et al.
7,194,397 B1 3/2007 Bush
7,515,991 B2 4/2009 Egawa et al.
7,653,800 B2 1/2010 Zohar et al.
7,756,614 B2 7/2010 Jouppi
7,813,835 B2 10/2010 Fujita et al.
7,843,431 B2 * 11/2010 Robbins G05D 1/0016 345/161
8,009,871 B2 8/2011 Rafii et al.
8,280,635 B2 10/2012 Ella et al.
8,396,611 B2 3/2013 Phillips et al.
8,401,275 B2 3/2013 Wang et al.
8,532,823 B2 9/2013 McElroy et al.
8,577,517 B2 11/2013 Phillips et al.
8,594,844 B1 11/2013 Gal
8,760,397 B2 6/2014 Robbins et al.
2001/0003713 A1 6/2001 Willner et al.
2001/0037163 A1 11/2001 Allard
2001/0048762 A1 12/2001 Matsuura et al.
2002/0148871 A1 10/2002 Nakano et al.
2002/0153185 A1 10/2002 Song et al.
2002/0160654 A1 10/2002 Kwoka
2003/0169906 A1 9/2003 Gokturk et al.
2003/0216834 A1 11/2003 Allard
2004/0078946 A1 4/2004 Nakamoto et al.
2004/0088081 A1 5/2004 Song et al.
2004/0111184 A1 6/2004 Chiappetta et al.
2004/0216931 A1 11/2004 Won
2004/0224765 A1 11/2004 Martinez et al.
2004/0227819 A1 11/2004 Houlberg
2005/0067994 A1 3/2005 Jones et al.
2005/0192721 A1 9/2005 Jouppi
2005/0216182 A1 9/2005 Hussain et al.
2005/0246458 A1 11/2005 Kavanagh
2006/0041333 A1 2/2006 Anezaki
2006/0125806 A1 * 6/2006 Voyles G06F 3/011 345/184
2006/0176660 A1 8/2006 Amiri
2006/0178820 A1 8/2006 Eglington et al.
2006/0226298 A1 10/2006 Pierson
2007/0070072 A1 3/2007 Templeman
2007/0078901 A1 4/2007 Satou et al.
2007/0149214 A1 6/2007 Walsh et al.
2007/0198144 A1 8/2007 Norris et al.
2007/0294032 A1 12/2007 Zumsteg et al.
2008/0009970 A1 1/2008 Bruemmer
2008/0027590 A1 * 1/2008 Phillips G05D 1/0088 701/2
2008/0027591 A1 1/2008 Lenser et al.
2008/0086241 A1 * 4/2008 Phillips G05D 1/0038 701/2
2008/0096654 A1 4/2008 Mondesir et al.
2008/0172531 A1 7/2008 Liu et al.
2008/0266254 A1 10/2008 Robbins et al.
2009/0037033 A1 * 2/2009 Phillips G05D 1/0088 701/2
2009/0089028 A1 4/2009 Sagert et al.
2009/0177844 A1 7/2009 Naylor et al.
2009/0301522 A1 12/2009 Abehasera et al.
2010/0011523 A1 1/2010 Larkowski et al.
2010/0082193 A1 4/2010 Chiappetta
2011/0088895 A1 4/2011 Pop et al.
2011/0106339 A1 * 5/2011 Phillips G05D 1/0033 701/2
2011/0109549 A1 5/2011 Robbins et al.
2011/0161133 A1 6/2011 Staveley et al.
2011/0264303 A1 10/2011 Lenser et al.
2012/0016589 A1 1/2012 Li et al.
2012/0101661 A1 4/2012 Phillips et al.
2012/0166024 A1 6/2012 Phillips et al.
2012/0185091 A1 * 7/2012 Field G05D 1/0044 700/254
2012/0268587 A1 10/2012 Robbins et al.
2013/0013108 A1 1/2013 Jacobsen et al.
2013/0166107 A1 6/2013 Robbins et al.
2013/0206477 A1 8/2013 Boone
2013/0268118 A1 * 10/2013 Grinstead B25J 19/023 700/259
2014/0247119 A1 9/2014 Robbins et al.
2014/0247261 A1 9/2014 Lenser et al.

OTHER PUBLICATIONS

Green et al., "Telepresence Surgery," 1995, IEEE, p. 324-329.
Mair, "The Technology and its Economic and Social Implications," 1997, IEEE, p. 118-124.
Shimoga et al., "Touch and Force Reflection for Telepresence Surgery," 1994, IEEE, p. 1049-1050.

* cited by examiner

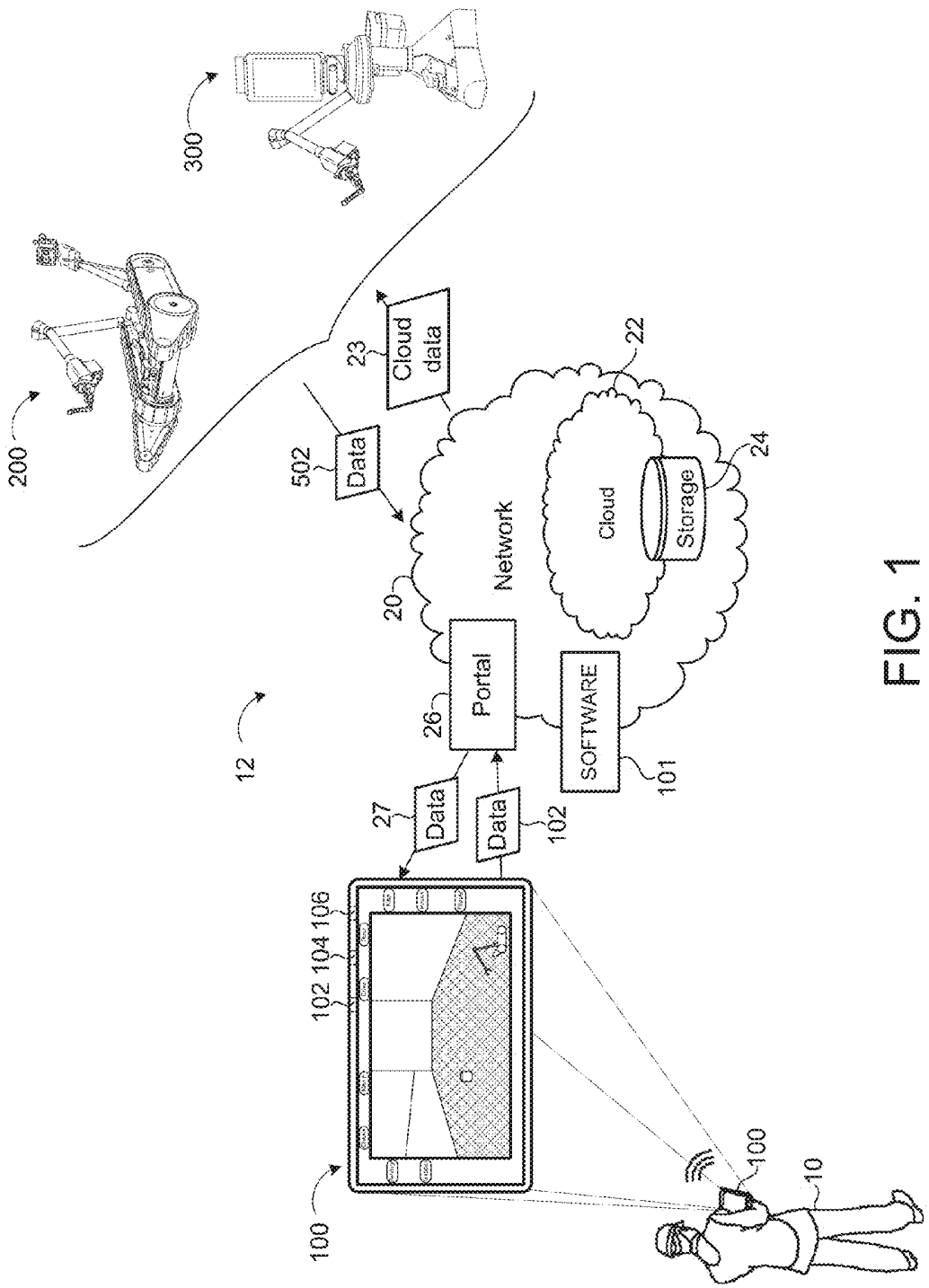
300
200
23
Cloud data
502
Data
22
Network
Cloud
Storage
24
20
26
Portal
SOFTWARE
101
12
27
Data
Data
102
102 104 106
100
100
10

FIG. 1

Tesla Exhibit 1009.004

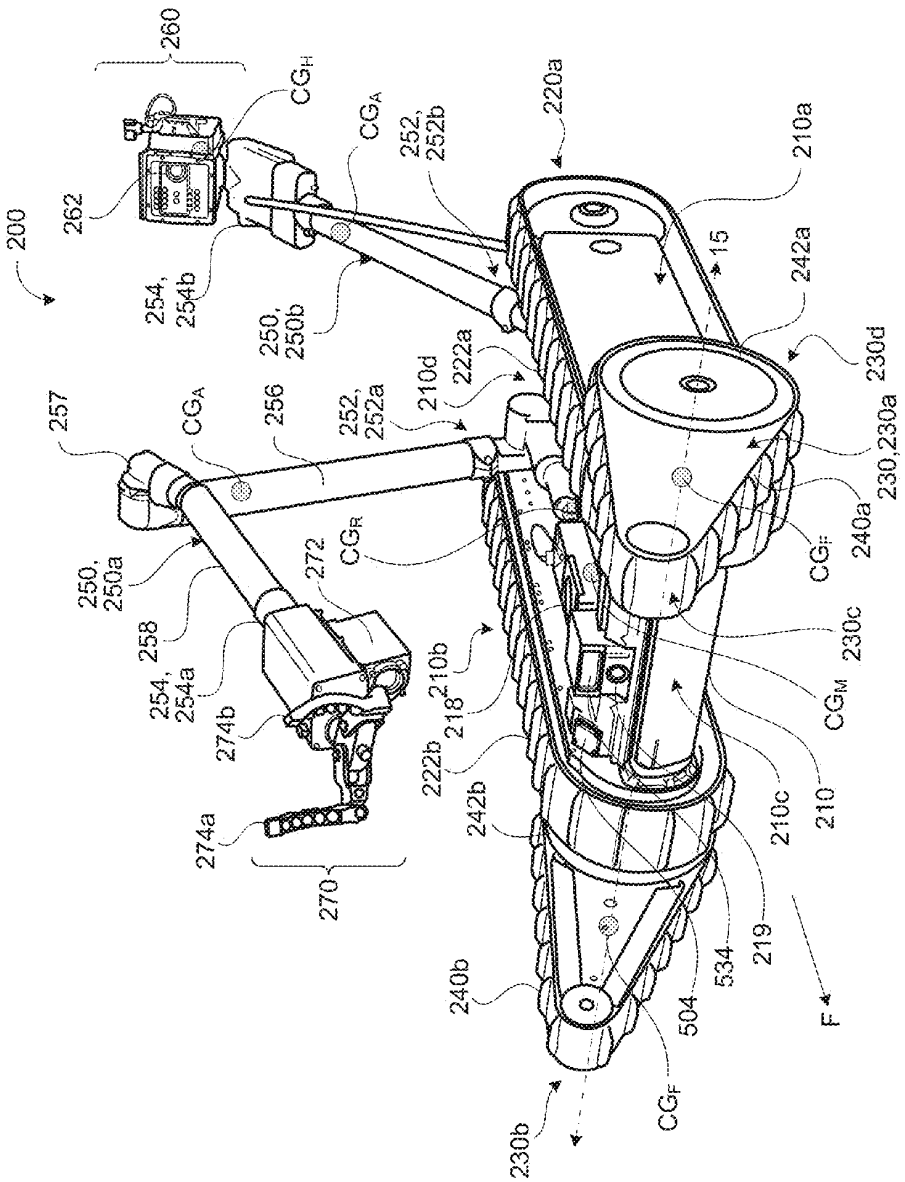

FIG. 2A

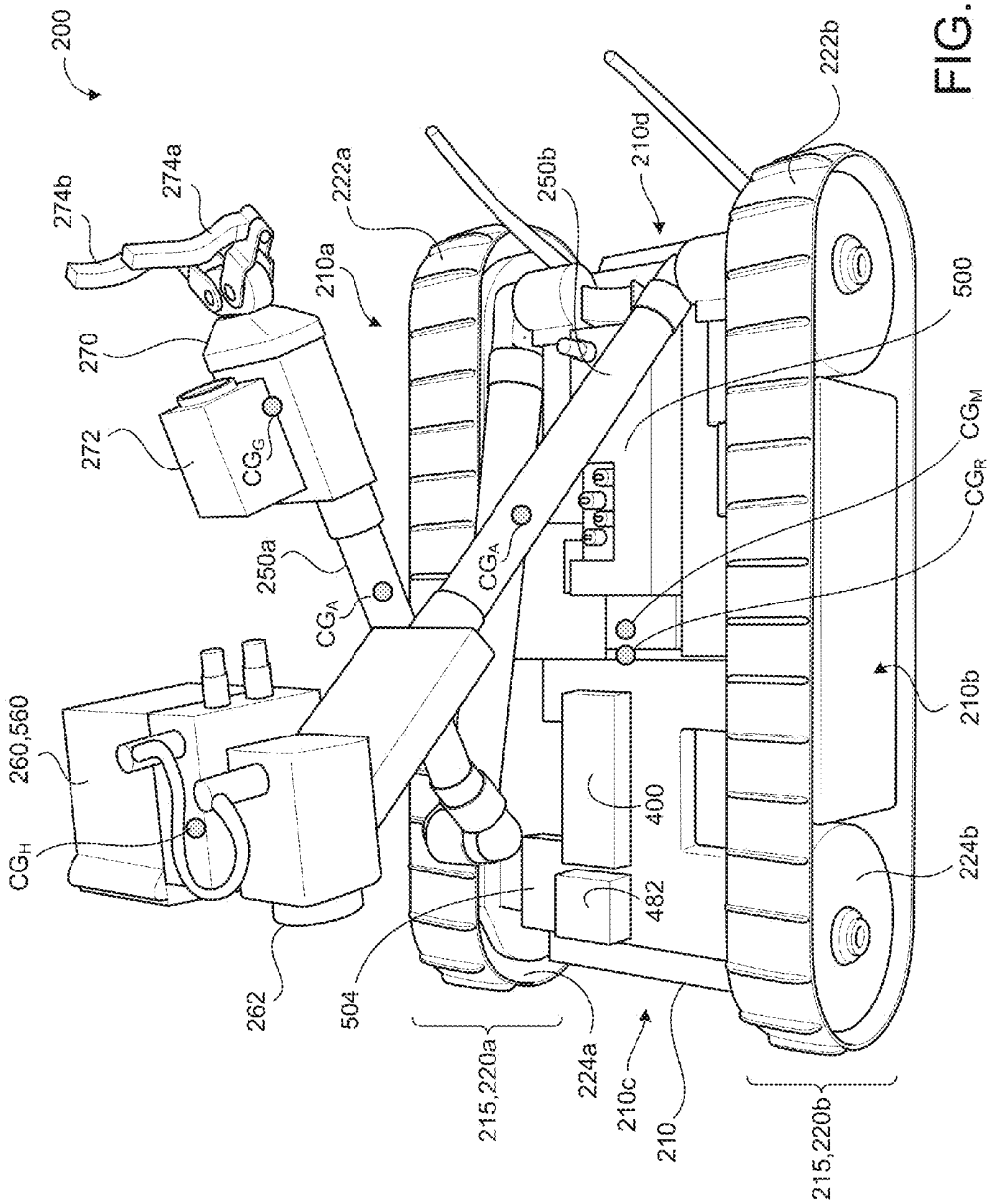
200
274b
274a
270
272
CG_S
210a
222a
250b
210d
222b
250a
CG_A
CG_A
500
CG_M
CG_R
260,560
CG_H
262
504
215,220a
224a
210c
210
400
482
210b
224b
215,220b

FIG. 2B

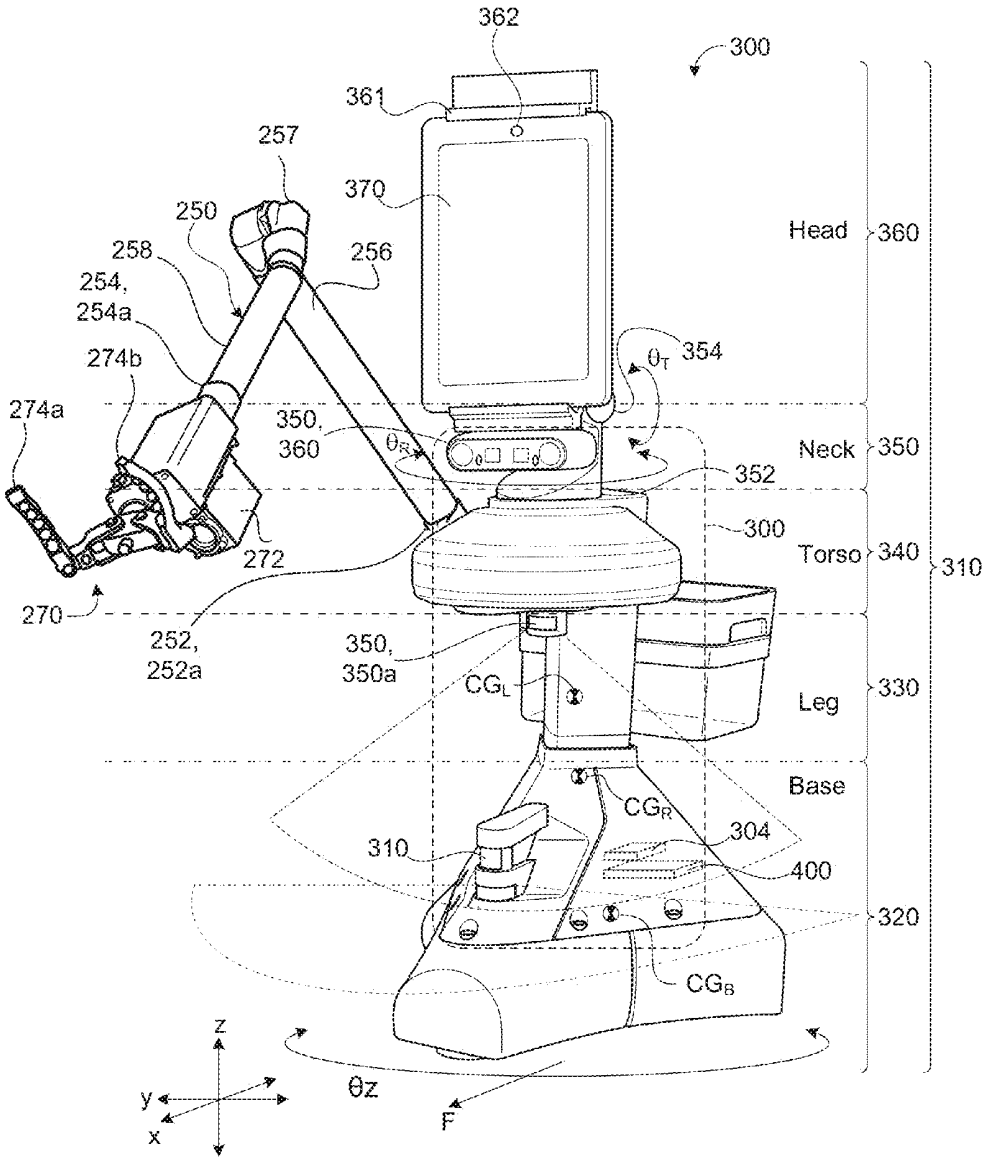
362
300
361
257
370
250
258
256
254,
254a
274b
274a
354
θ_T
350,
360
θ_R
352
300
272
270
252,
252a
350,
350a
CG_L
CG_R
310
304
400
CG_B
Head
360
Neck
350
Torso
340
310
Leg
330
Base
320
z
y
x
θz
F

FIG. 3A

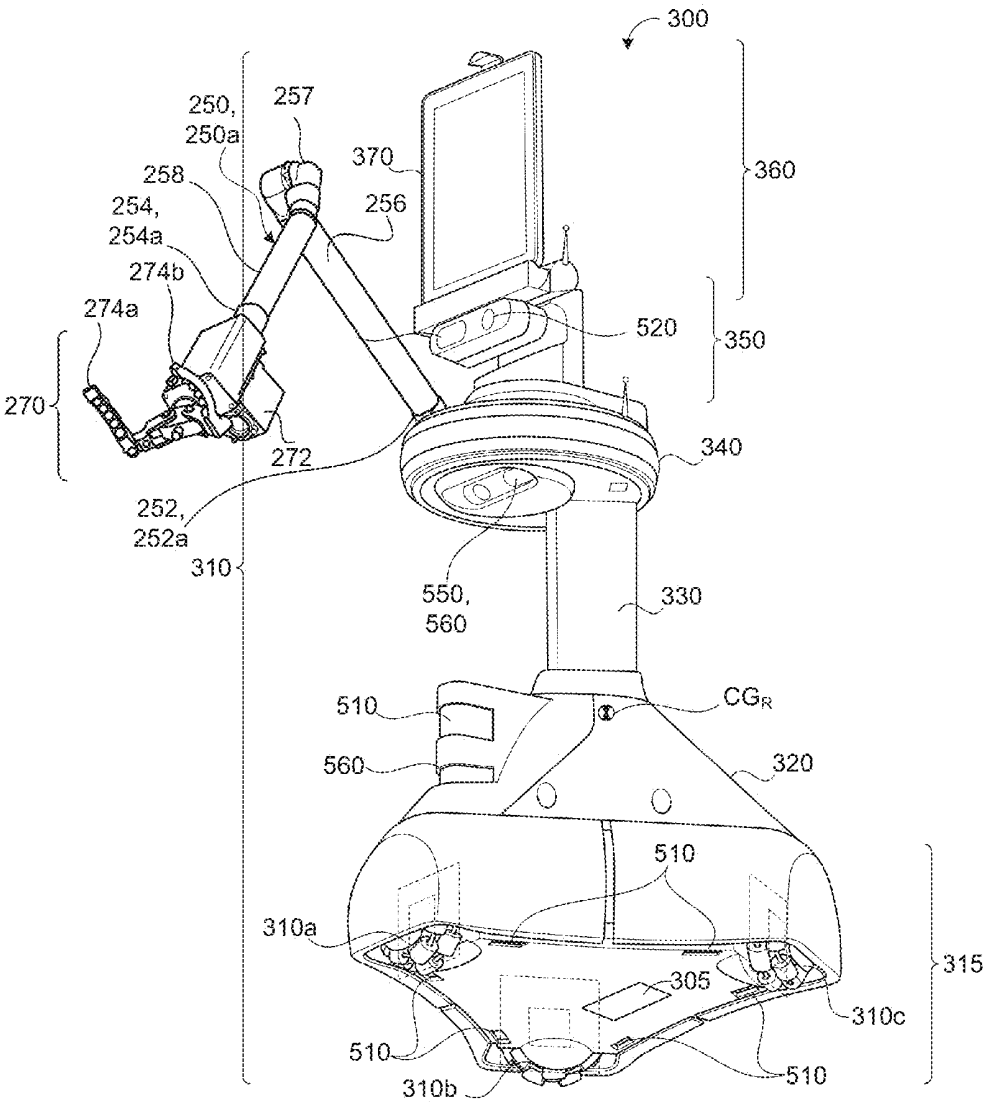
300
250,
250a
257
370
360
258
256
254,
254a
274b
274a
520
350
270
272
340
252,
252a
310
550,
560
330
510
CG$_R$
560
320
510
310a
305
315
310c
510
510
310b

FIG. 3B

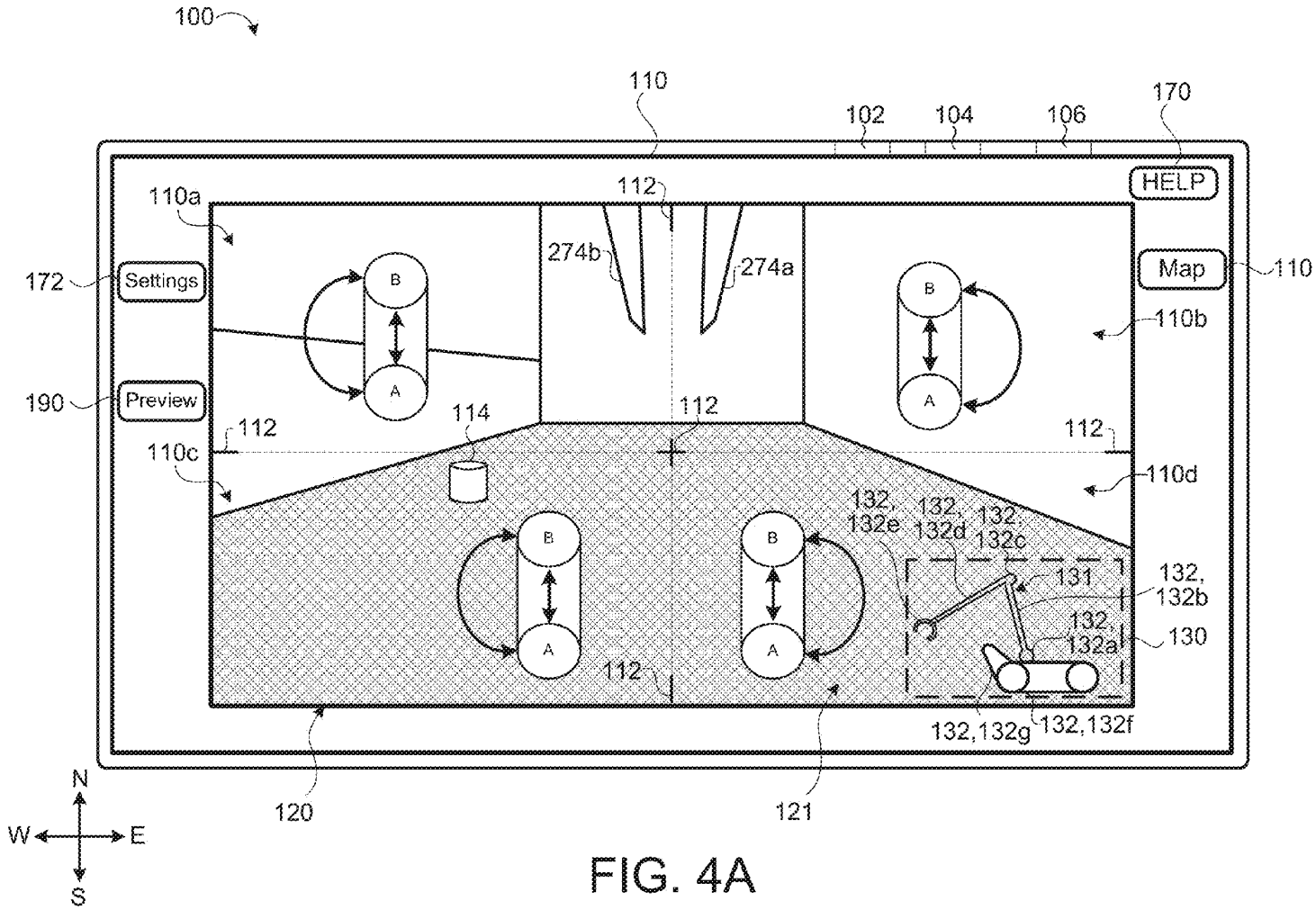
100
110
102
104
106
170
HELP
110a
112
274b
274a
172
Settings
Map
110
110b
190
Preview
114
112
110c
110d
132, 132e
132, 132d
132, 132c
131
132, 132b
132, 132a
130
132,132g
132,132f
120
121
N
W
E
S

FIG. 4A

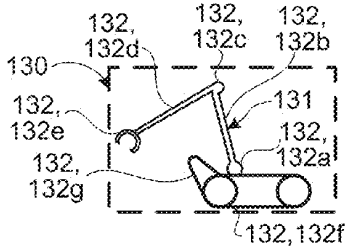

FIG. 4B

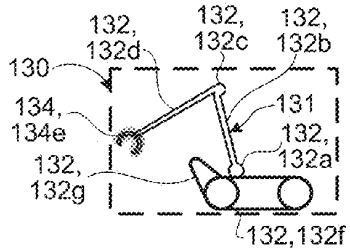

FIG. 4C

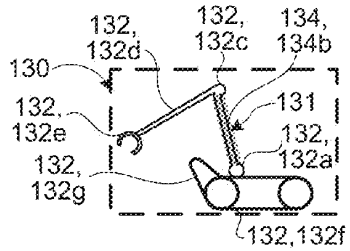

FIG. 4D

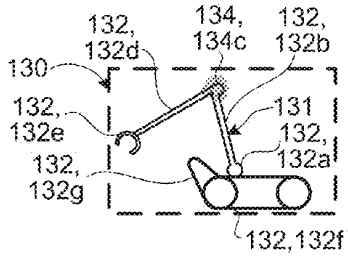

FIG. 4E

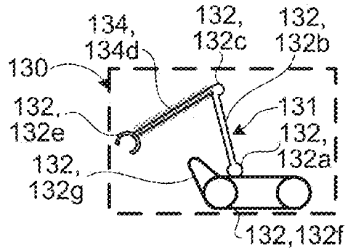

FIG. 4F

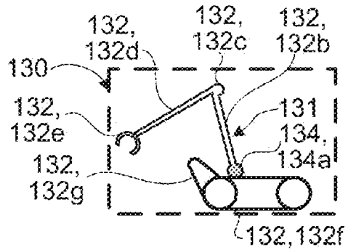

FIG. 4G

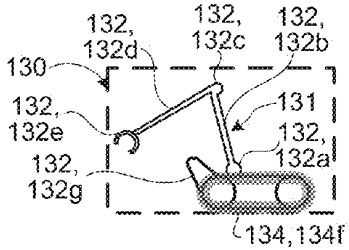

FIG. 4H

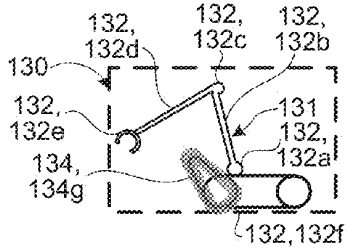

FIG. 4I

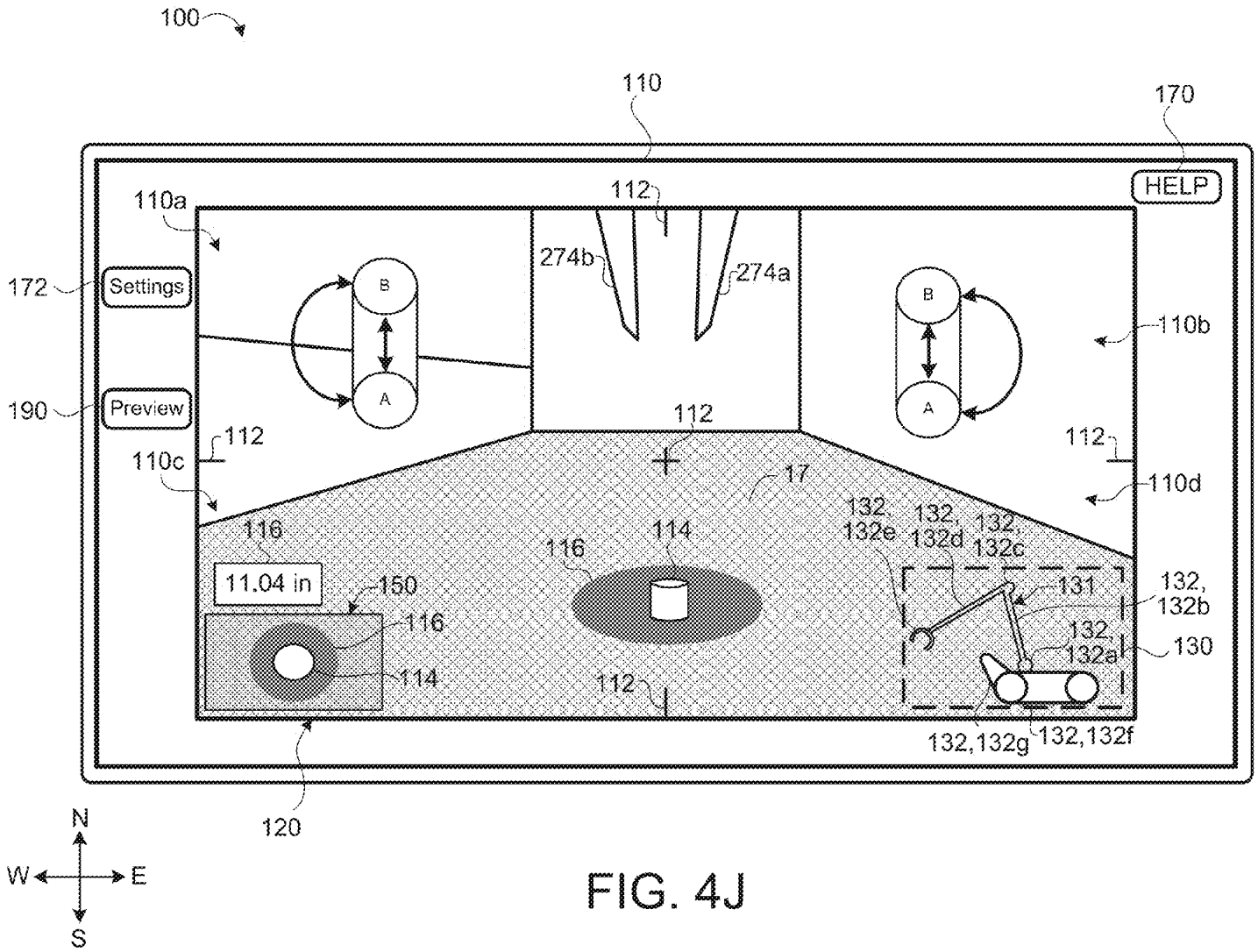
100
110
170
HELP
110a
112
274b
274a
172
Settings
B
A
110b
190
Preview
112
110c
17
110d
116
114
132, 132e
132, 132d
132, 132c
11.04 in
150
131
132, 132b
132, 132a
130
112
132,132g
132,132f
120
N
W
E
S

FIG. 4J

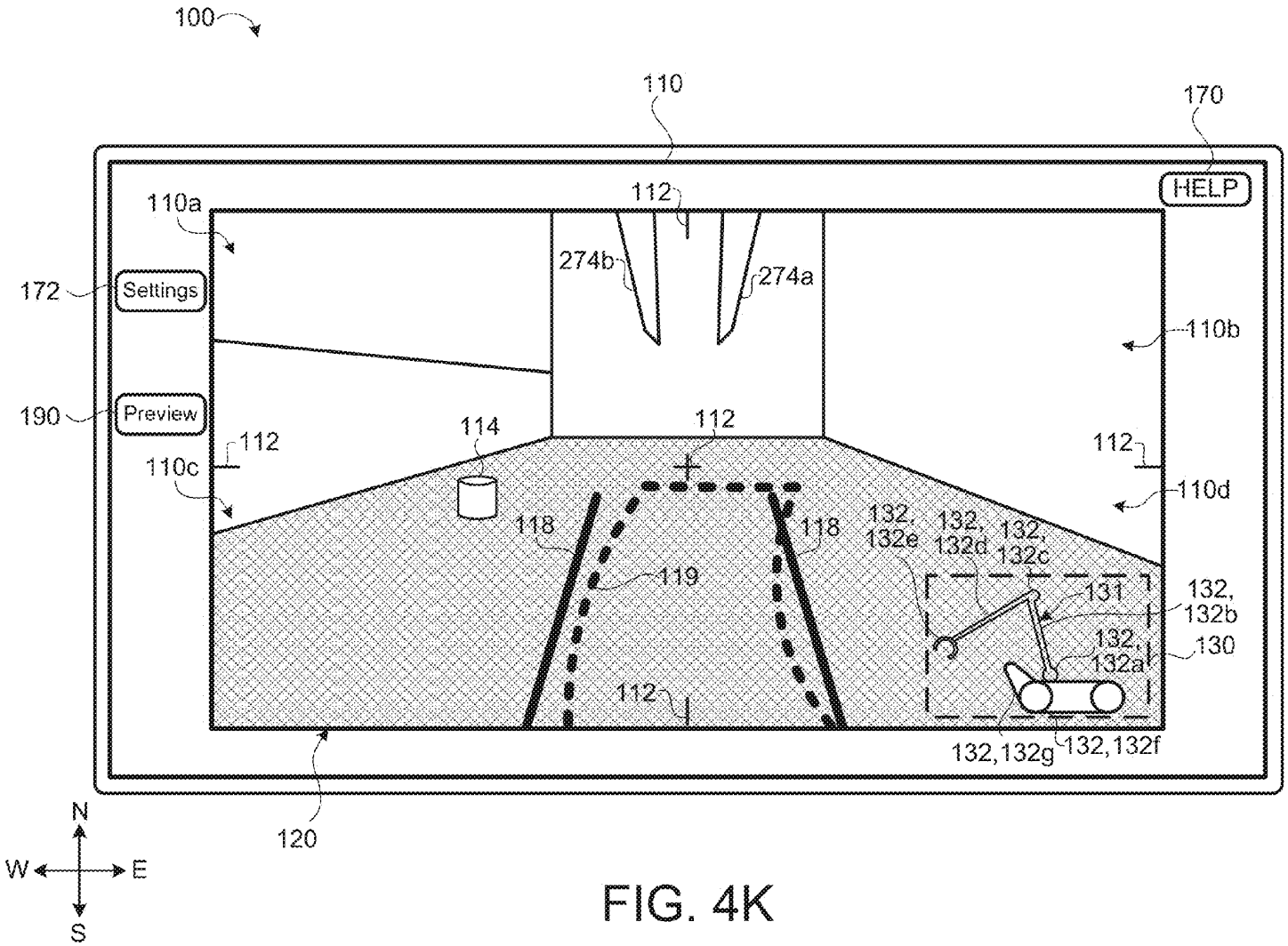
100
110
170
HELP
110a
112
274b
274a
172
Settings
110b
190
Preview
112
114
112
112
110c
110d
118
118
132, 132e
132, 132d
132, 132c
119
131
132, 132b
132, 132a
130
112
132,132g
132,132f
120
N
W
E
S

FIG. 4K

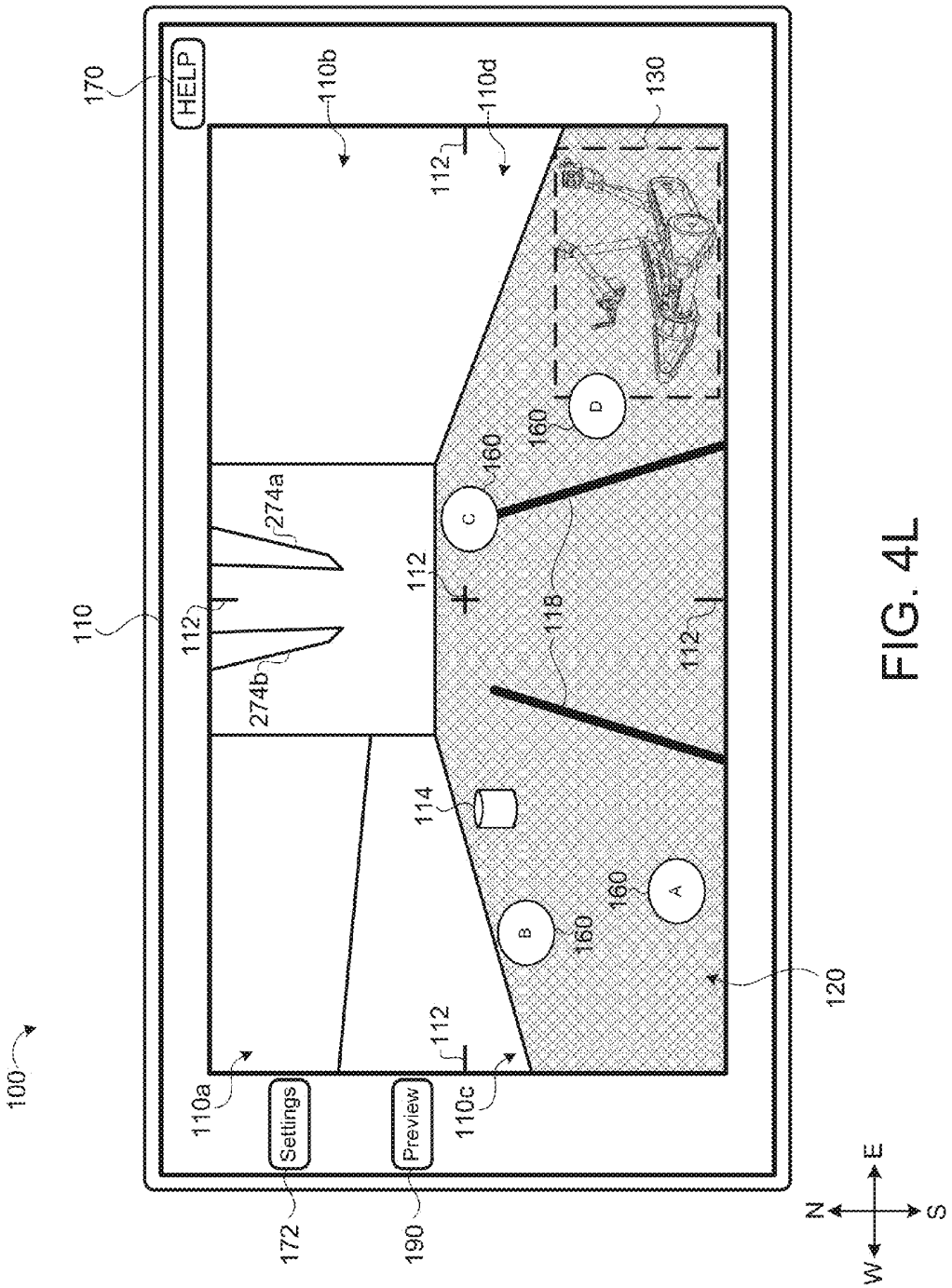
100
110
170
HELP
110a
110b
110c
110d
112
114
118
120
130
160
A
B
C
D
172
Settings
190
Preview
274a
274b
N
E
S
W

FIG. 4L

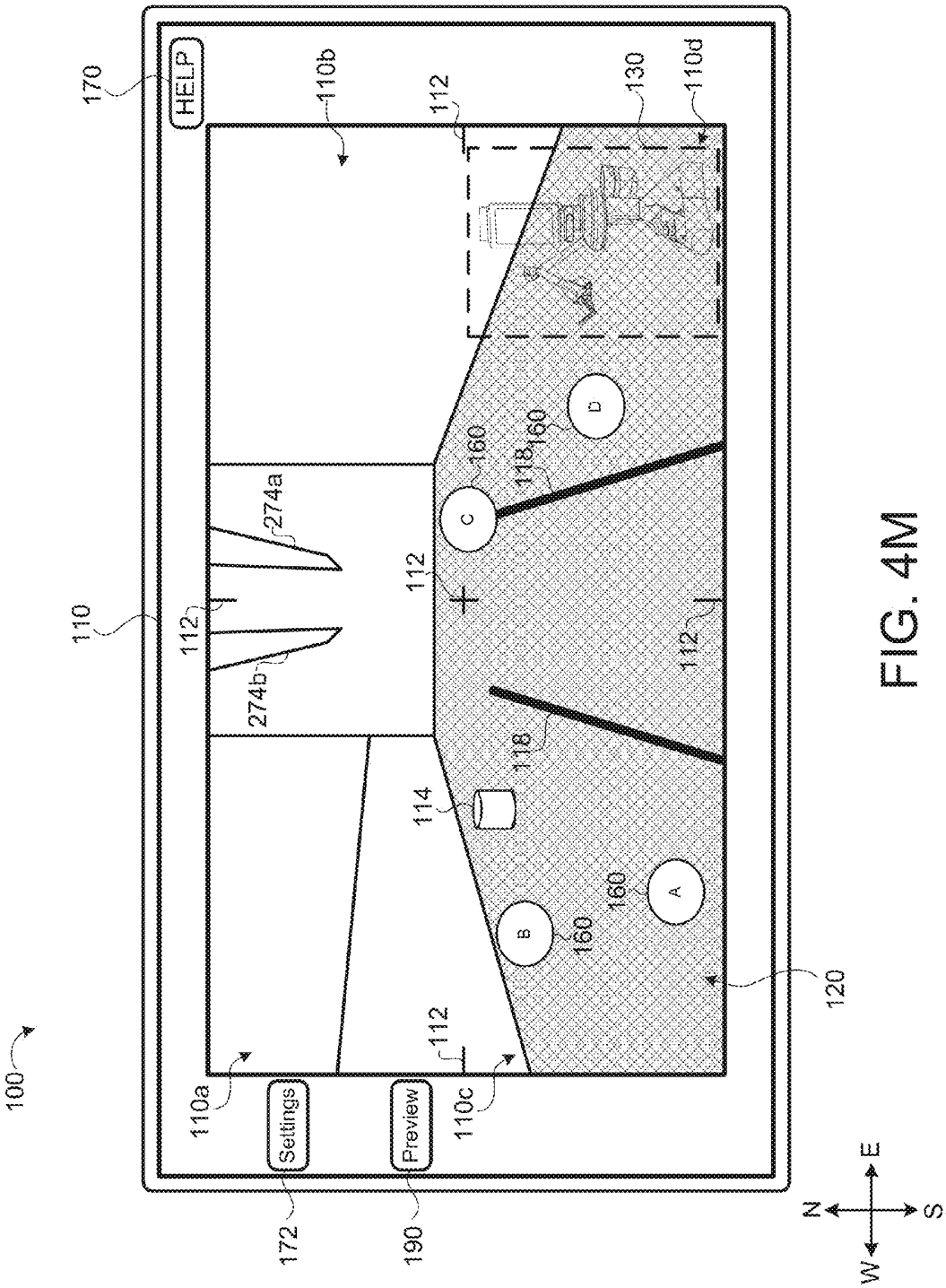
100
110
110a
110b
110c
110d
112
114
118
120
130
160
170
172
190
274a
274b
HELP
Settings
Preview
A
B
C
D
N
E
S
W

FIG. 4M

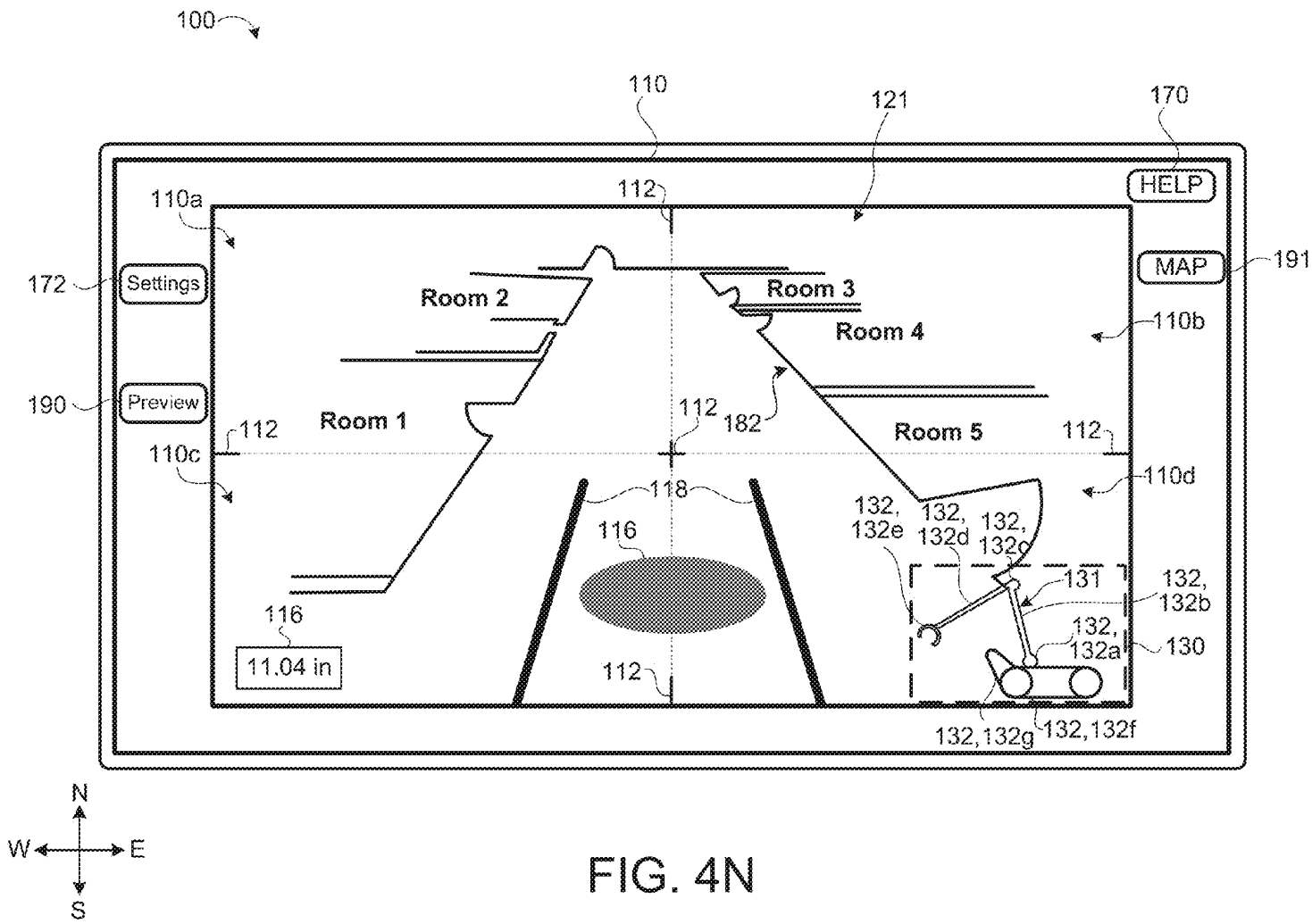
100
110
121
170
HELP
110a
112
MAP
191
172
Settings
Room 2
Room 3
Room 4
110b
190
Preview
Room 1
112
182
Room 5
112
110c
110d
118
116
132,
132e
132,
132d
132,
132c
131
132,
132b
116
132,
132a
130
11.04 in
112
132,132g
132,132f
N
W
E
S

FIG. 4N

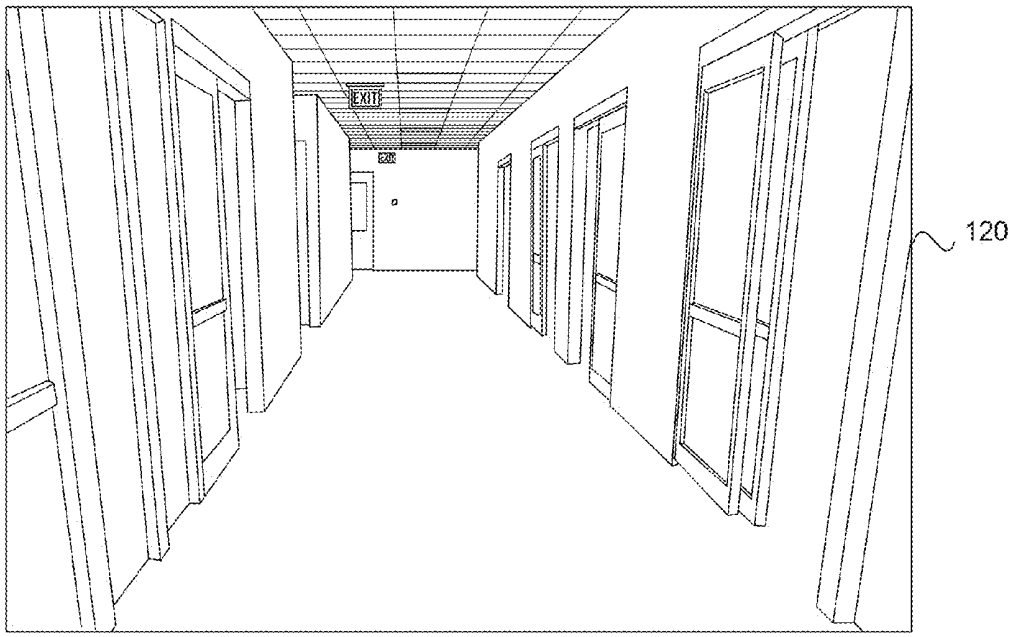

FIG. 5A

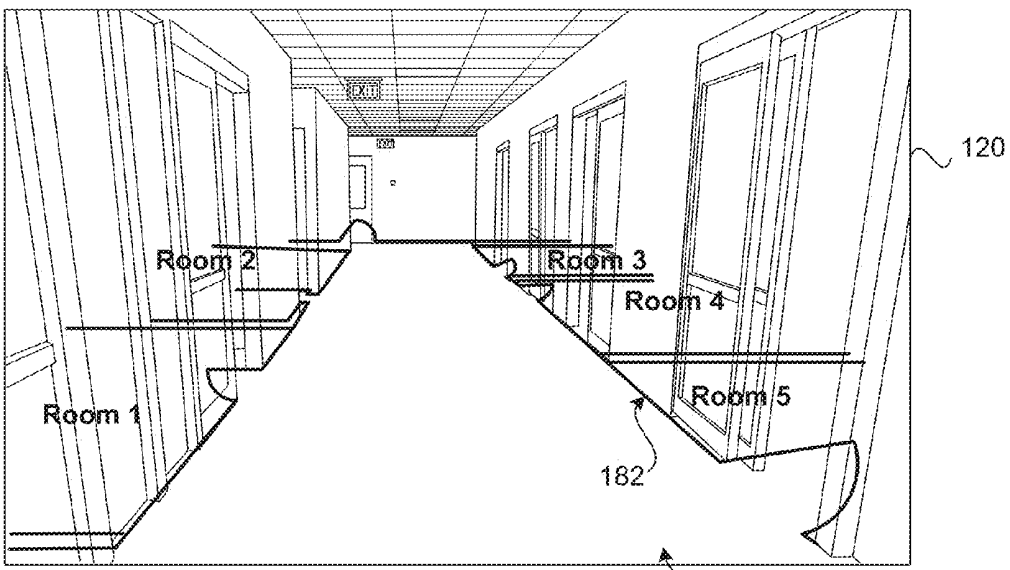

FIG. 5B

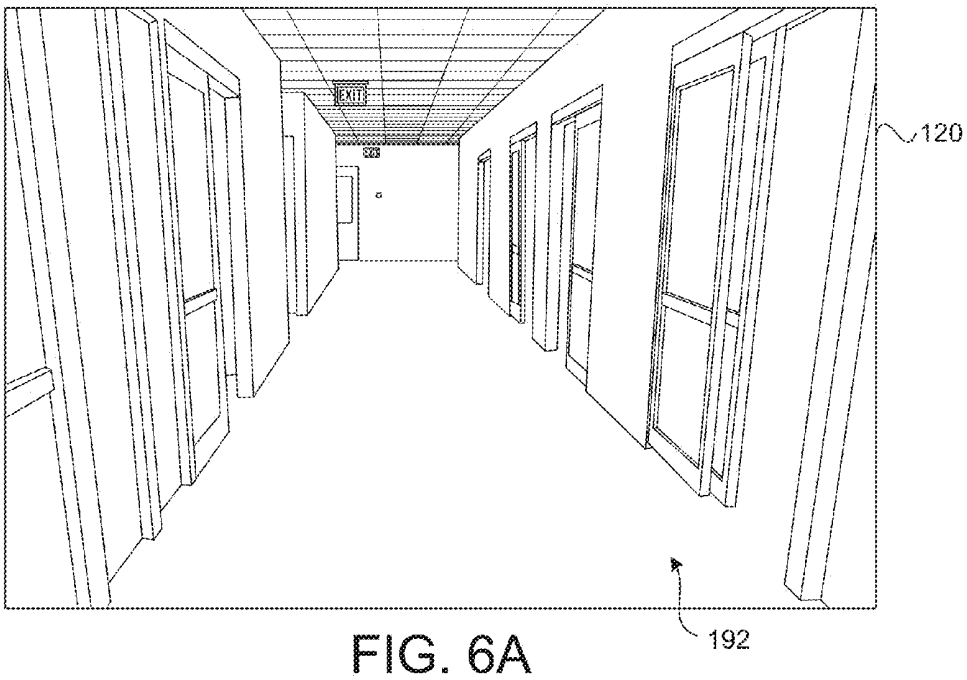

FIG. 6A

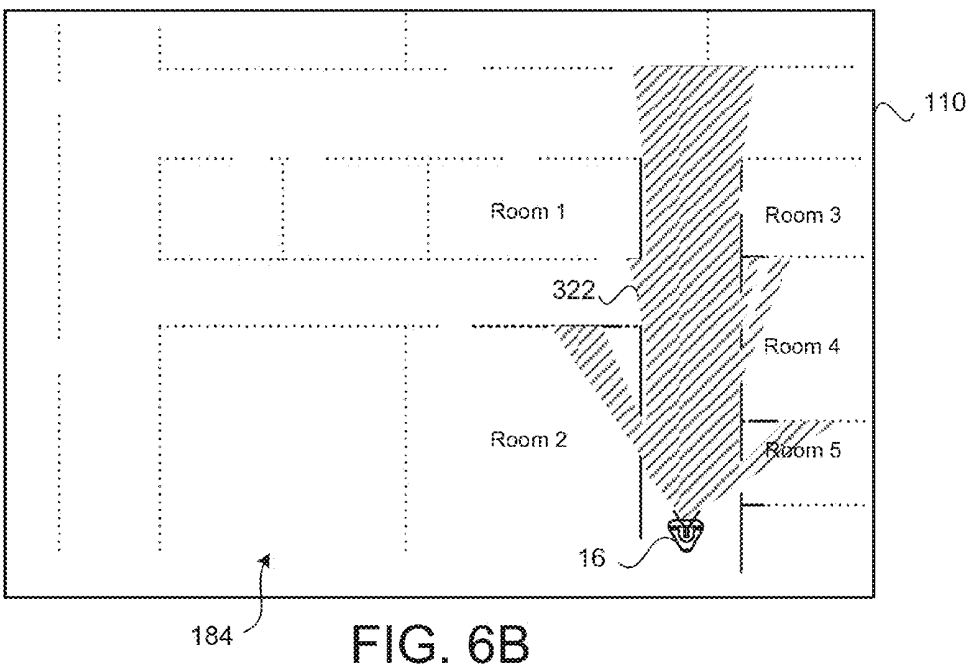

FIG. 6B

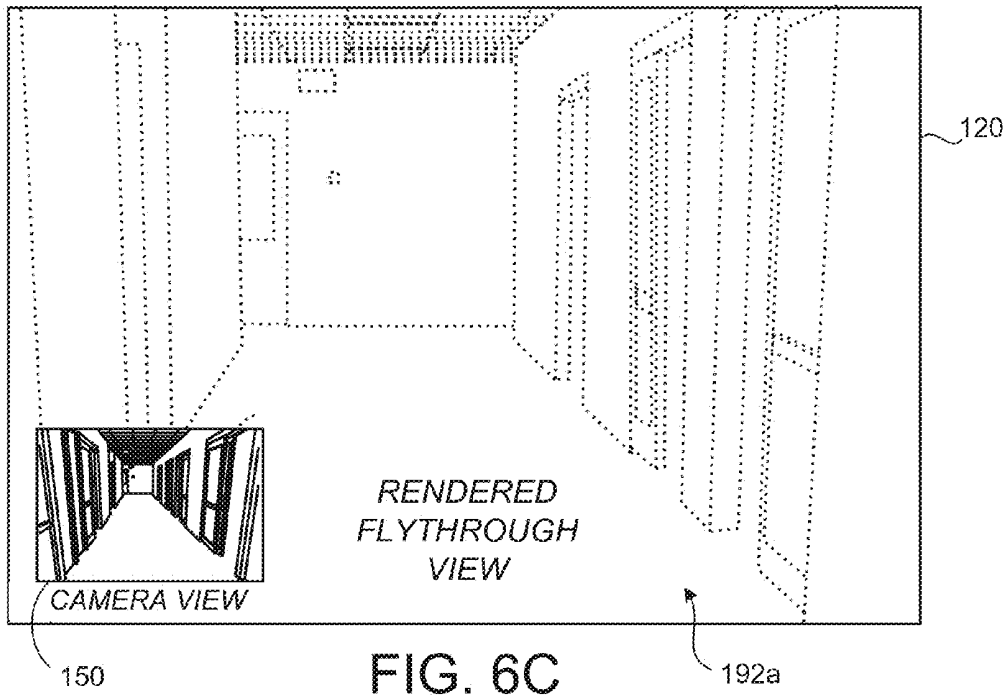
120
RENDERED
FLYTHROUGH
VIEW
CAMERA VIEW
150
192a

FIG. 6C

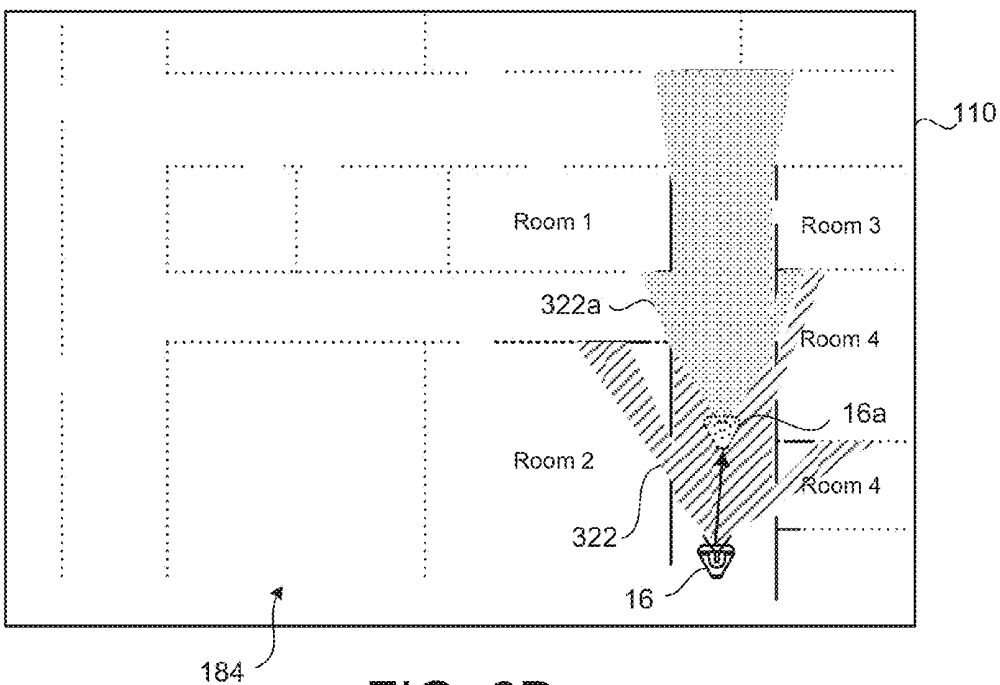
110
Room 1
Room 3
322a
Room 4
16a
Room 2
Room 4
322
16
184

FIG. 6D

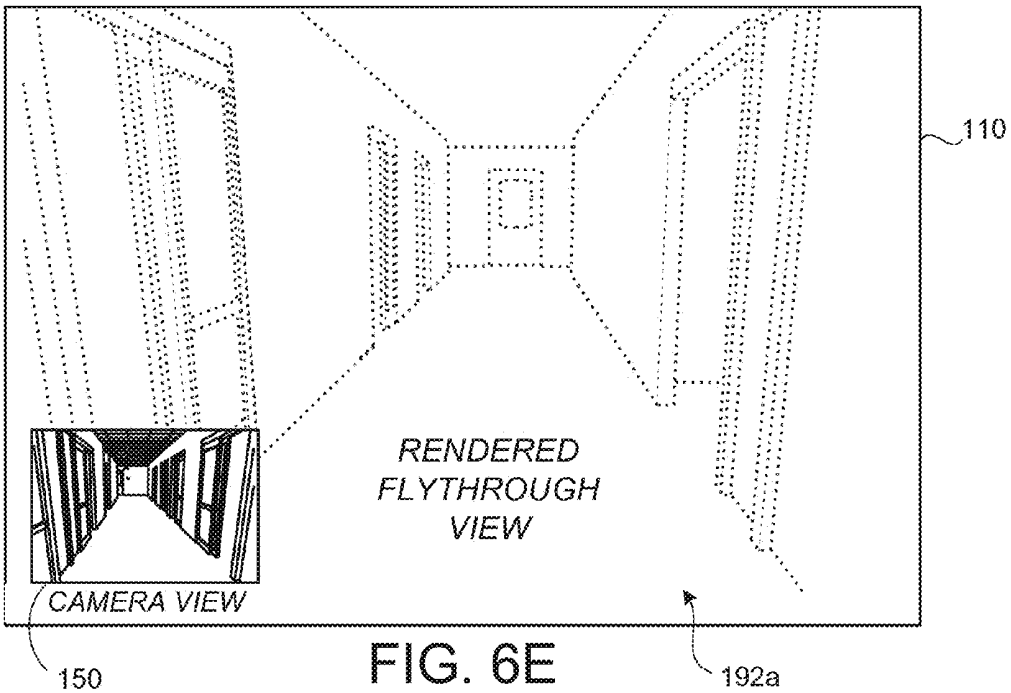
110
RENDERED
FLYTHROUGH
VIEW
CAMERA VIEW
150
192a

FIG. 6E

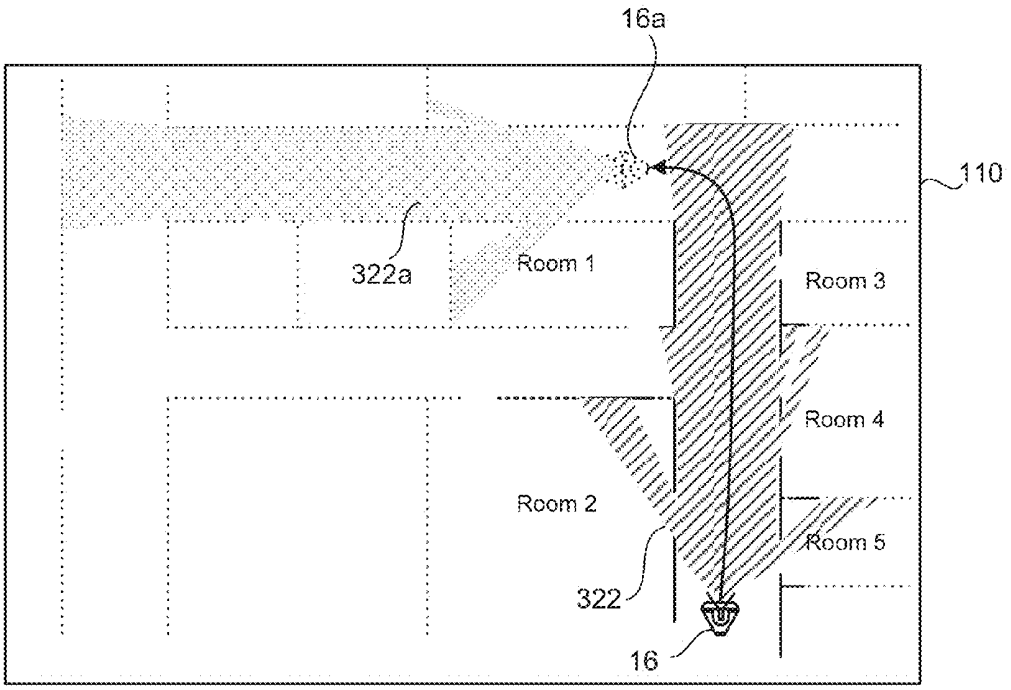
16a
110
322a
Room 1
Room 3
Room 4
Room 2
Room 5
322
16

FIG. 6F

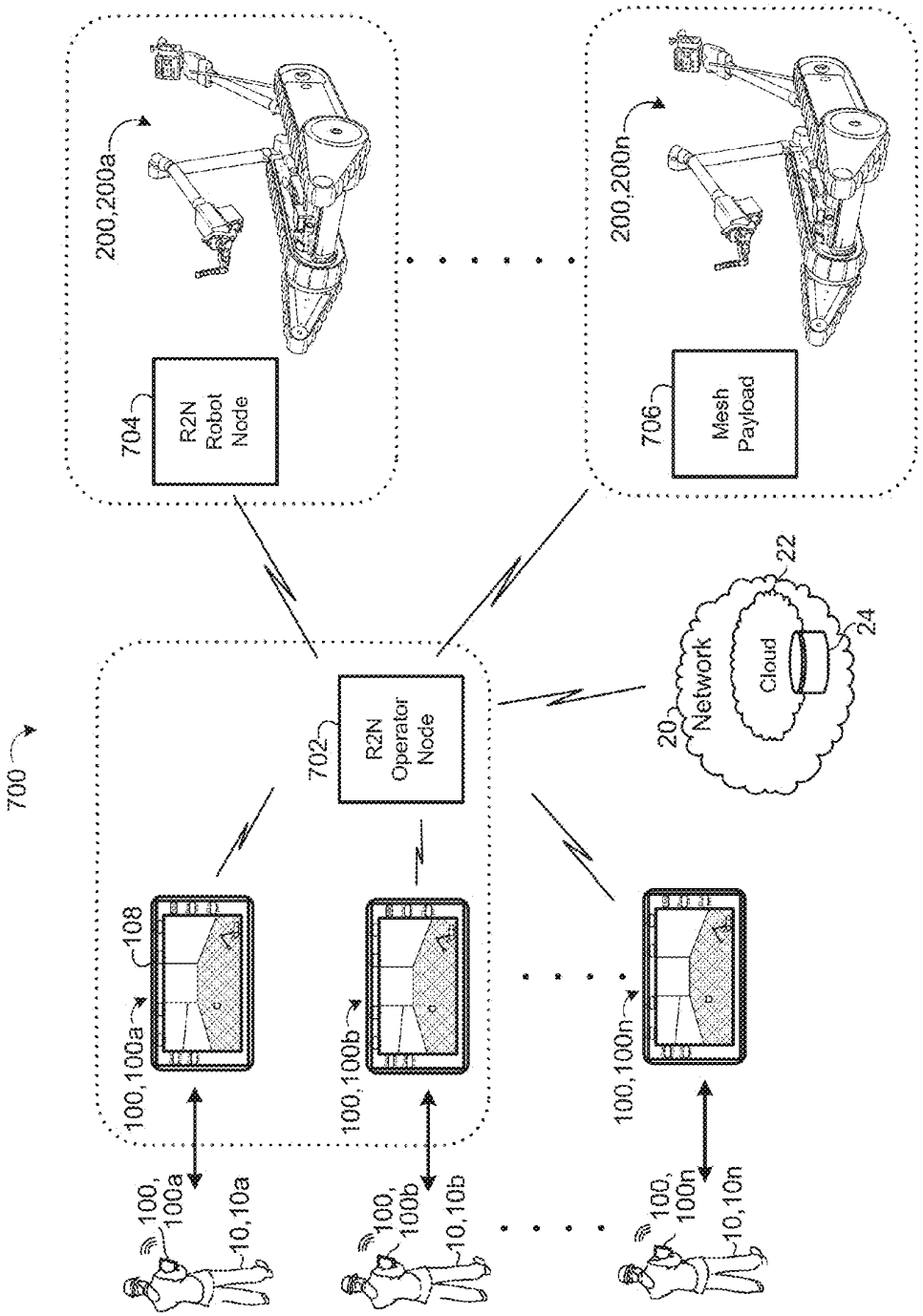
700
200,200a
704
R2N Robot Node
200,200n
706
Mesh Payload
702
R2N Operator Node
20
Network
Cloud
22
24
108
100,100a
100,100b
100,100n
100, 100a
10,10a
100, 100b
10,10b
100, 100n
10,10n

FIG. 7A

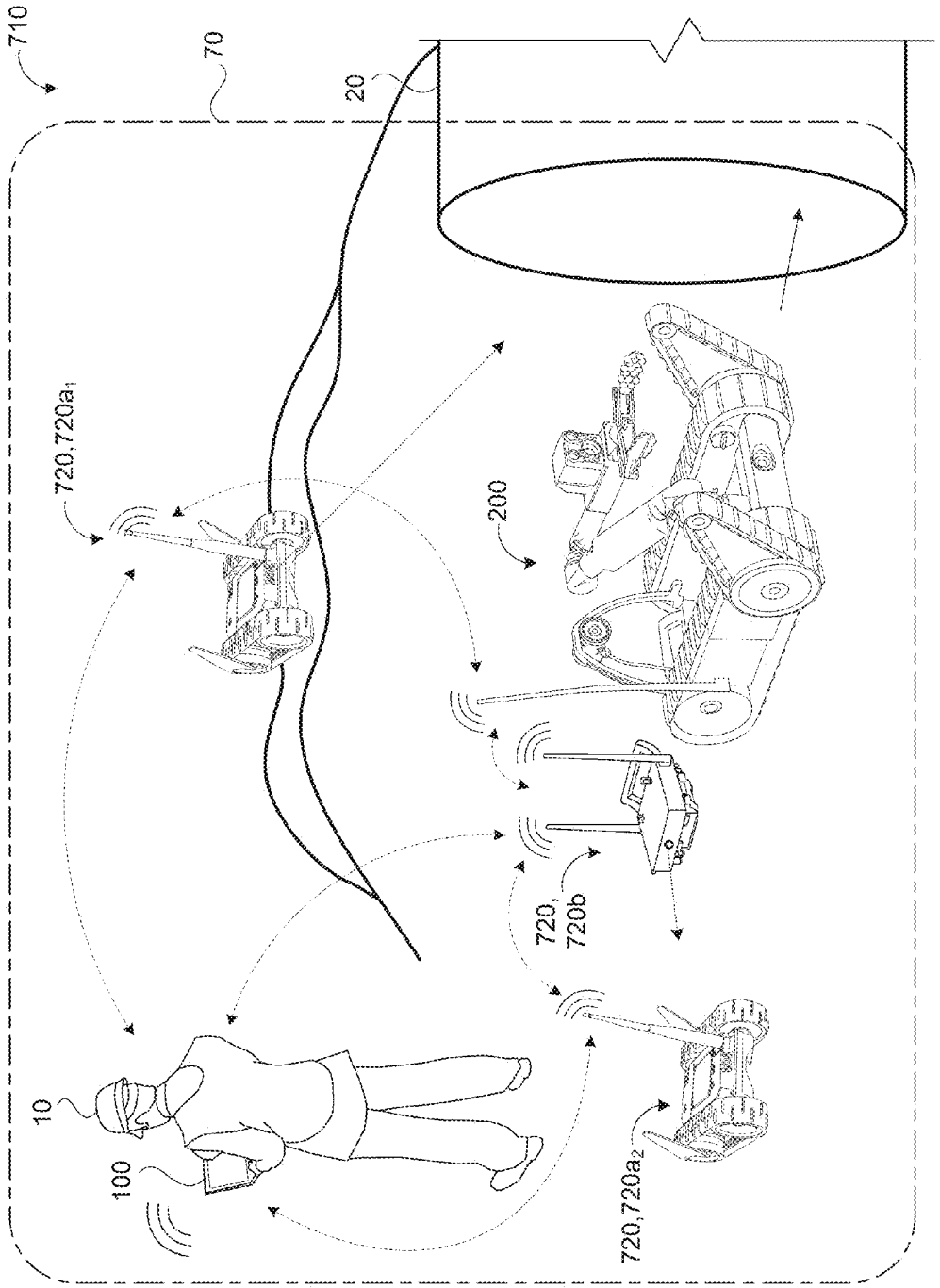

FIG. 7B

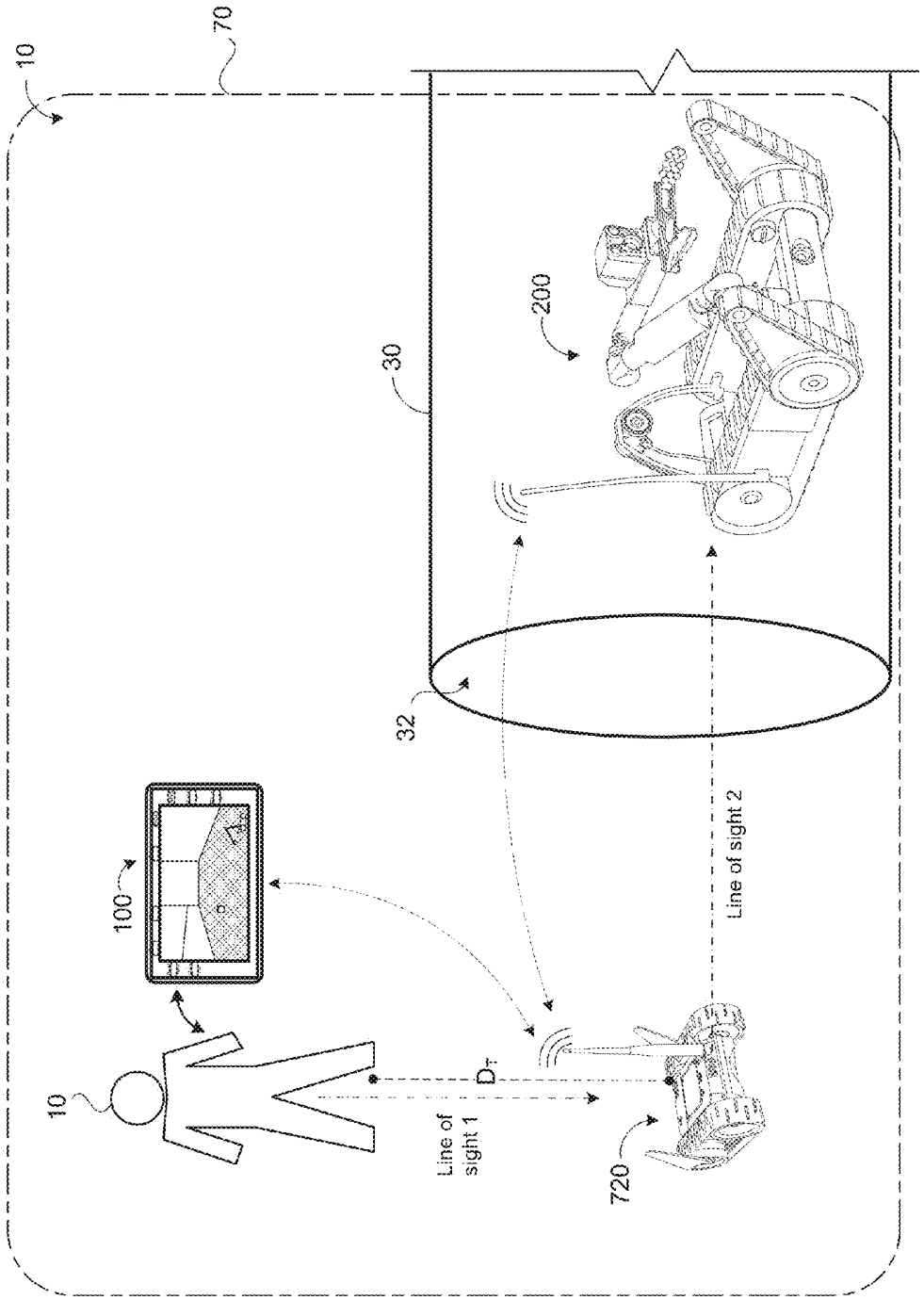

FIG. 7C

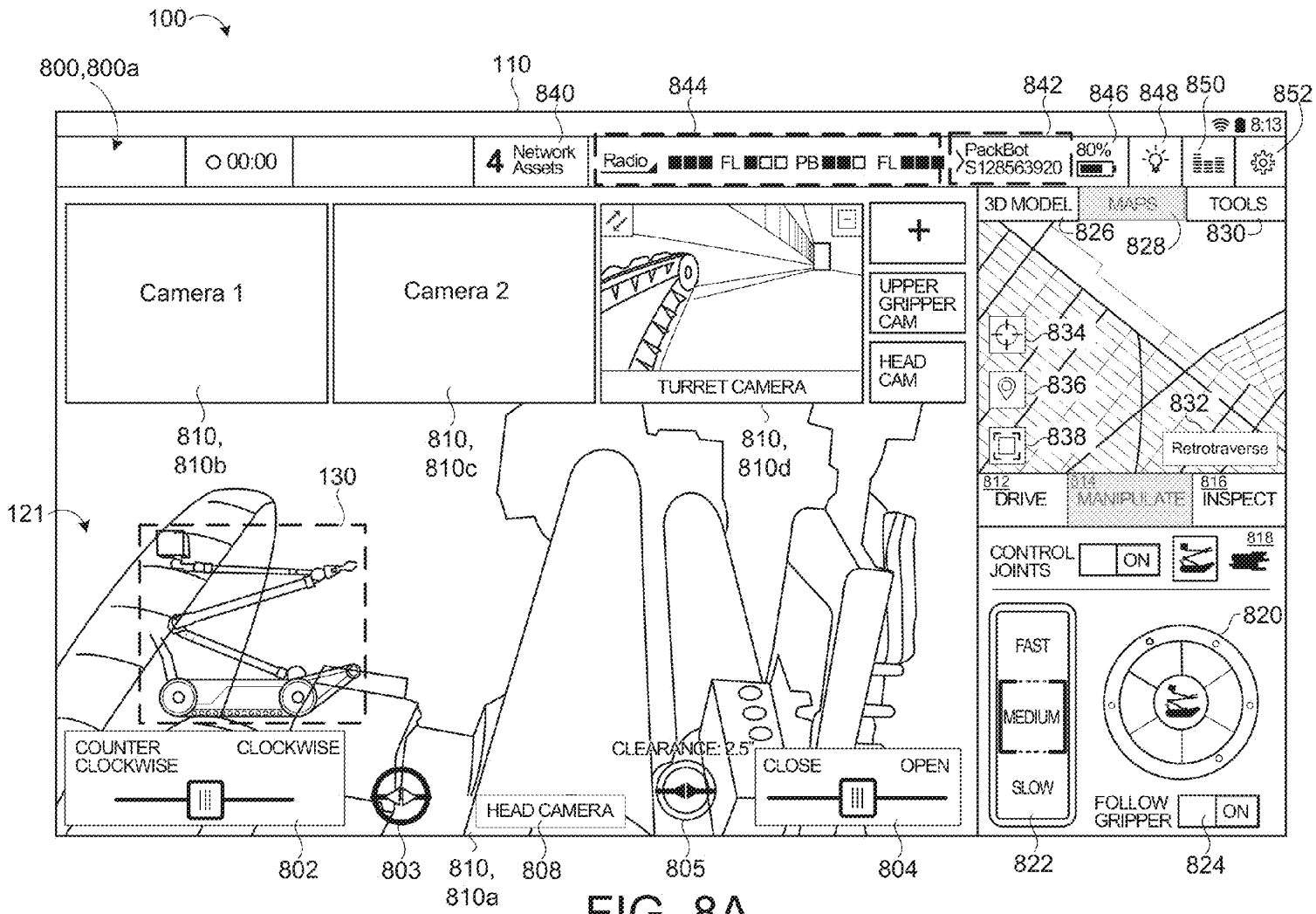
100
800,800a
110
840
844
842
846
848
850
852
00:00
4 Network Assets
Radio
FL
PB
FL
PackBot S128563920
80%
8:13
3D MODEL
MAPS
TOOLS
826
828
830
Camera 1
Camera 2
TURRET CAMERA
UPPER GRIPPER CAM
HEAD CAM
834
836
838
832
Retrotraverse
810, 810b
810, 810c
810, 810d
130
121
812 DRIVE
814 MANIPULATE
816 INSPECT
CONTROL JOINTS
ON
818
820
FAST
MEDIUM
SLOW
FOLLOW GRIPPER
ON
COUNTER CLOCKWISE
CLOCKWISE
CLEARANCE: 2.5'
CLOSE
OPEN
HEAD CAMERA
802
803
810, 810a
808
805
804
822
824

FIG. 8A

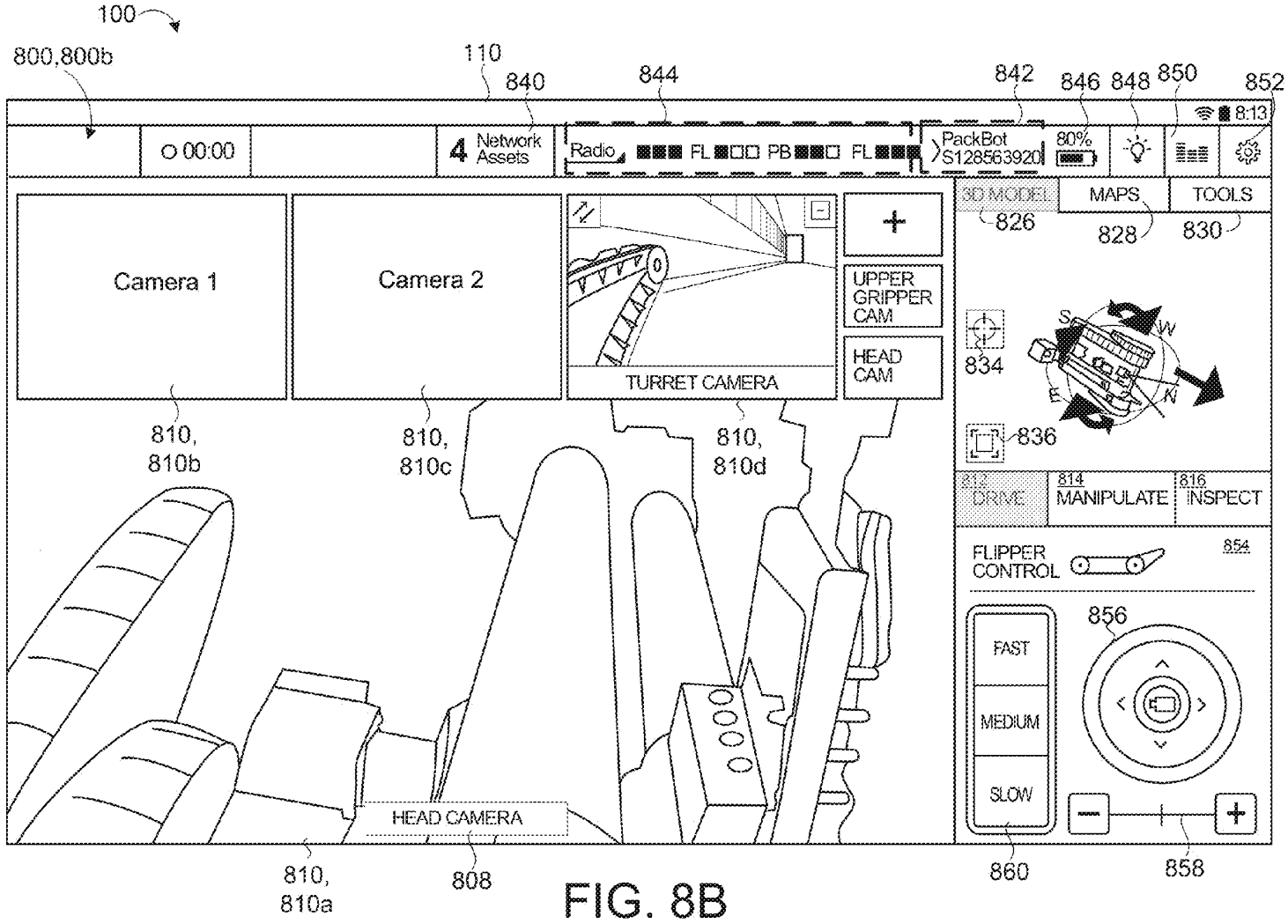
100
800,800b
110
840
844
842
846
848
850
852
8:13
00:00
4 Network Assets
Radio
FL
PB
FL
PackBot S128563920
80%
3D MODEL
MAPS
TOOLS
826
828
830
Camera 1
Camera 2
TURRET CAMERA
UPPER GRIPPER CAM
HEAD CAM
834
836
S
W
E
N
812 DRIVE
814 MANIPULATE
816 INSPECT
FLIPPER CONTROL
854
856
FAST
MEDIUM
SLOW
HEAD CAMERA
810, 810b
810, 810c
810, 810d
810, 810a
808
860
858

FIG. 8B

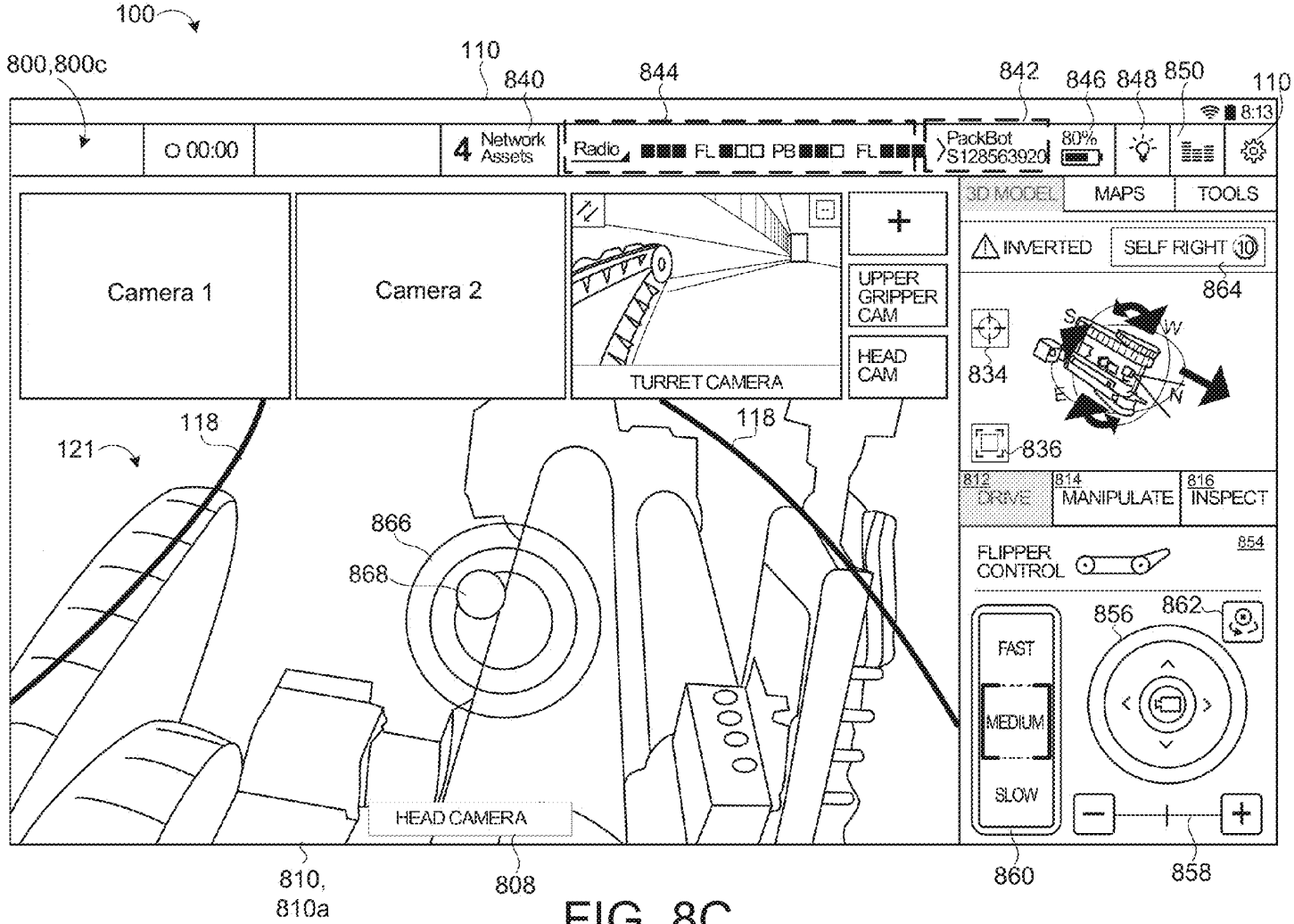
100
800,800c
110
840
844
842
846
848
850
110
8:13
00:00
4 Network Assets
Radio
FL
PB
FL
PackBot S128563920
80%
3D MODEL
MAPS
TOOLS
Camera 1
Camera 2
TURRET CAMERA
UPPER GRIPPER CAM
HEAD CAM
INVERTED
SELF RIGHT
864
834
836
121
118
118
866
868
812 DRIVE
814 MANIPULATE
816 INSPECT
FLIPPER CONTROL
854
856
862
FAST
MEDIUM
SLOW
HEAD CAMERA
810, 810a
808
860
858

FIG. 8C

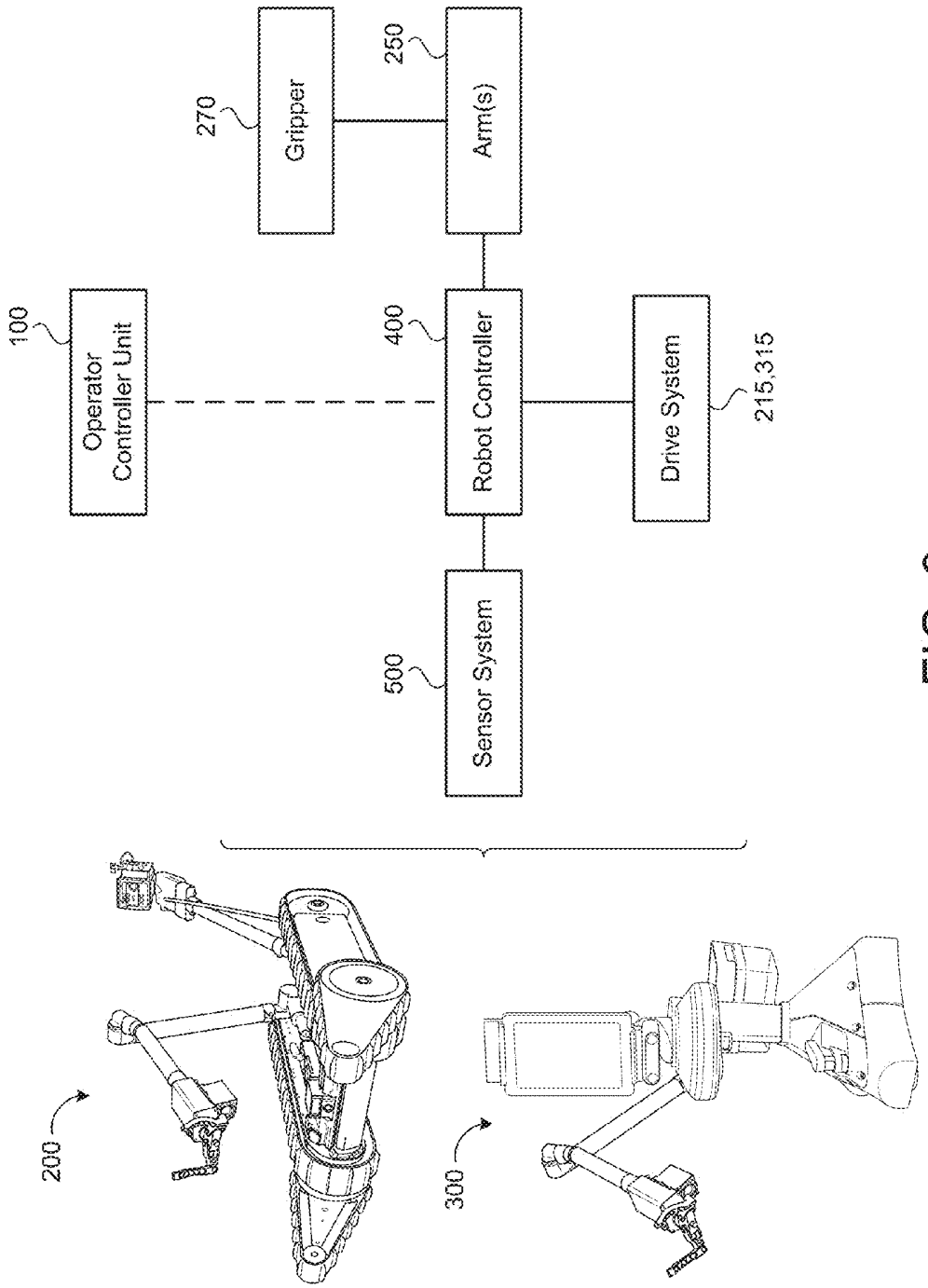
100
Operator Controller Unit
270
Gripper
250
Arm(s)
400
Robot Controller
Drive System
215,315
500
Sensor System
200
300

FIG. 9

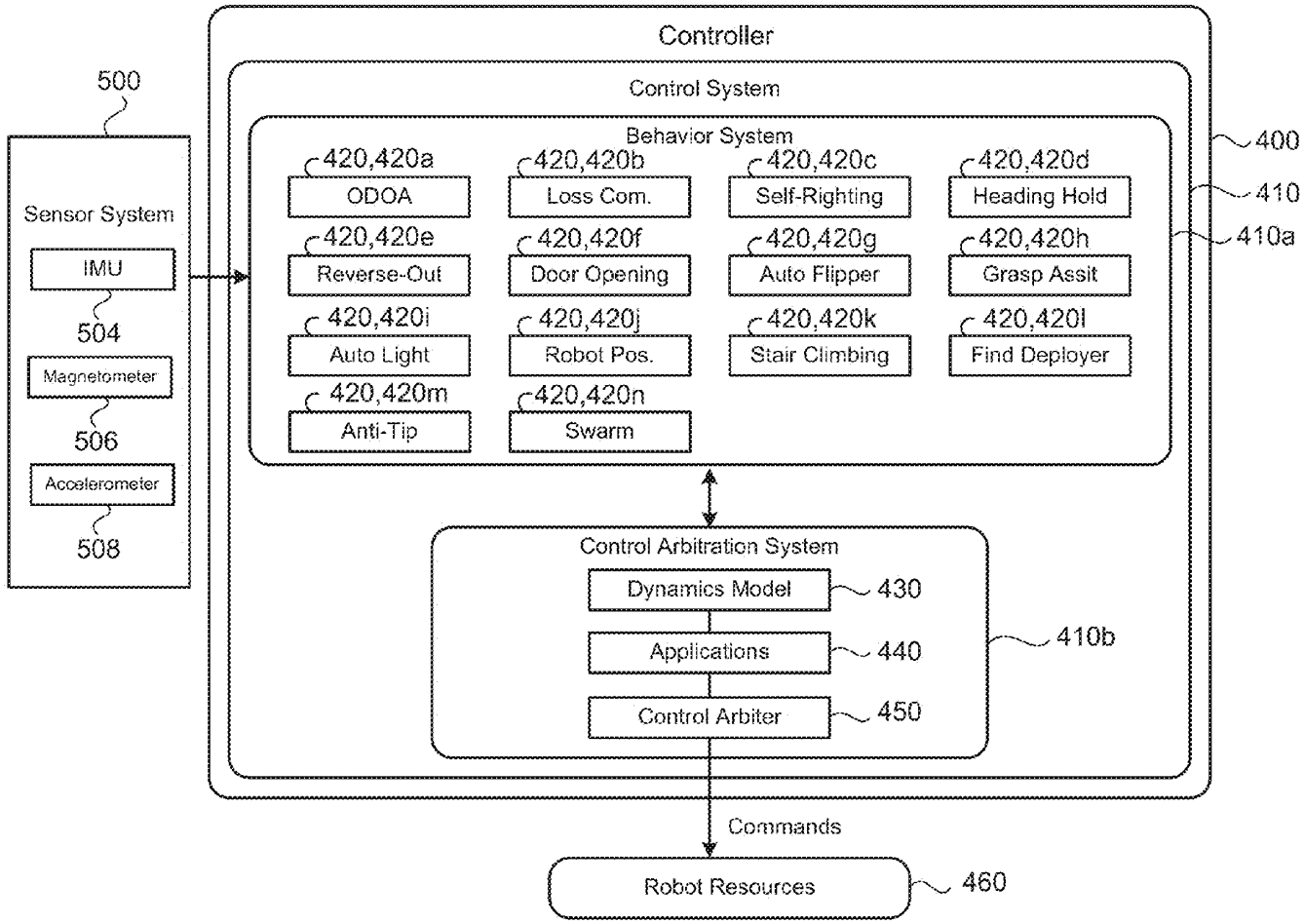
Controller
Control System
Behavior System
400
410
410a
500
Sensor System
IMU
504
Magnetometer
506
Accelerometer
508
420,420a
ODOA
420,420b
Loss Com.
420,420c
Self-Righting
420,420d
Heading Hold
420,420e
Reverse-Out
420,420f
Door Opening
420,420g
Auto Flipper
420,420h
Grasp Assit
420,420i
Auto Light
420,420j
Robot Pos.
420,420k
Stair Climbing
420,420l
Find Deployer
420,420m
Anti-Tip
420,420n
Swarm
Control Arbitration System
Dynamics Model
430
Applications
440
Control Arbiter
450
410b
Commands
Robot Resources
460

FIG. 10

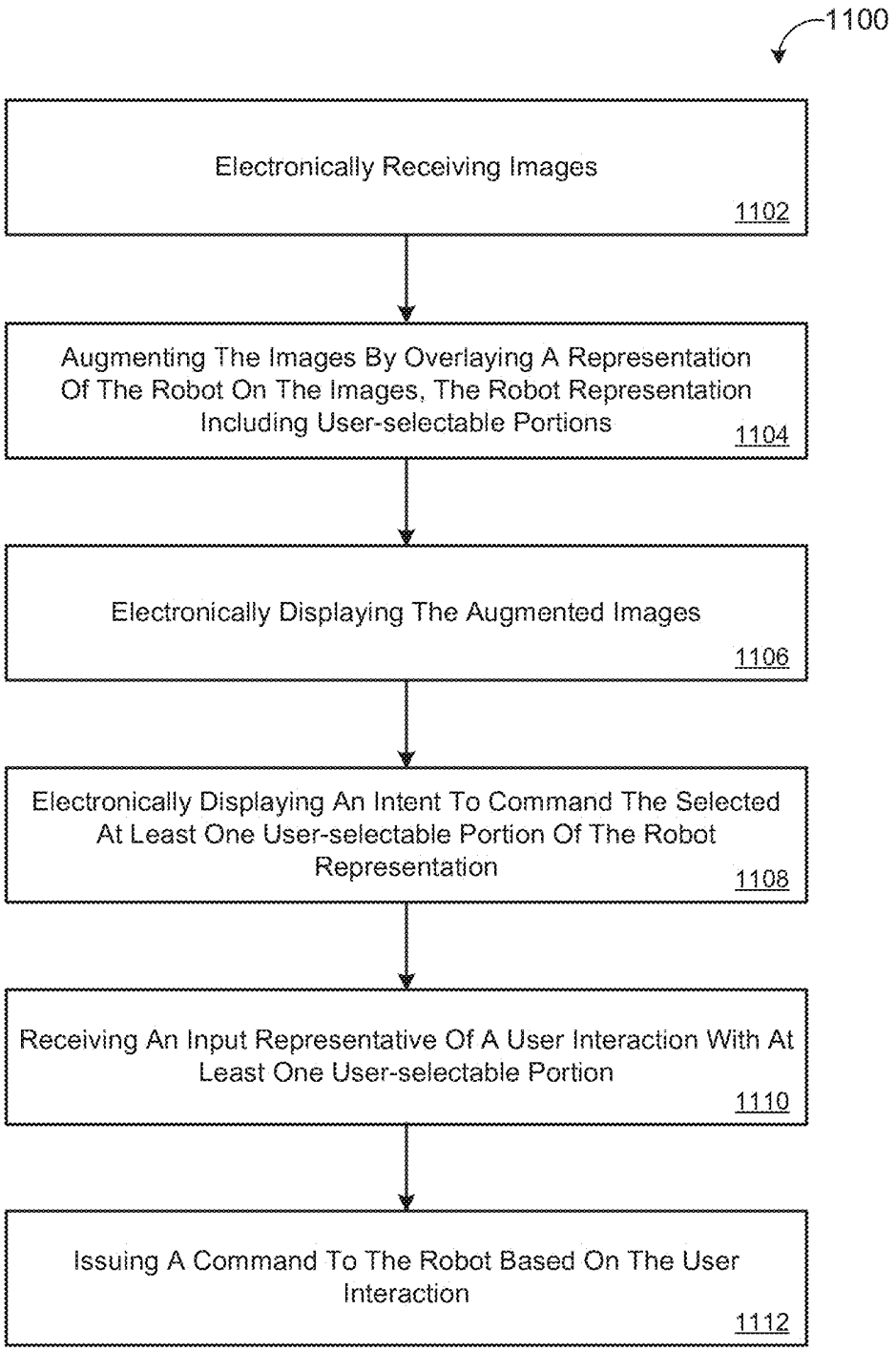
1100
Electronically Receiving Images
1102
Augmenting The Images By Overlaying A Representation Of The Robot On The Images, The Robot Representation Including User-selectable Portions
1104
Electronically Displaying The Augmented Images
1106
Electronically Displaying An Intent To Command The Selected At Least One User-selectable Portion Of The Robot Representation
1108
Receiving An Input Representative Of A User Interaction With At Least One User-selectable Portion
1110
Issuing A Command To The Robot Based On The User Interaction
1112

FIG. 11

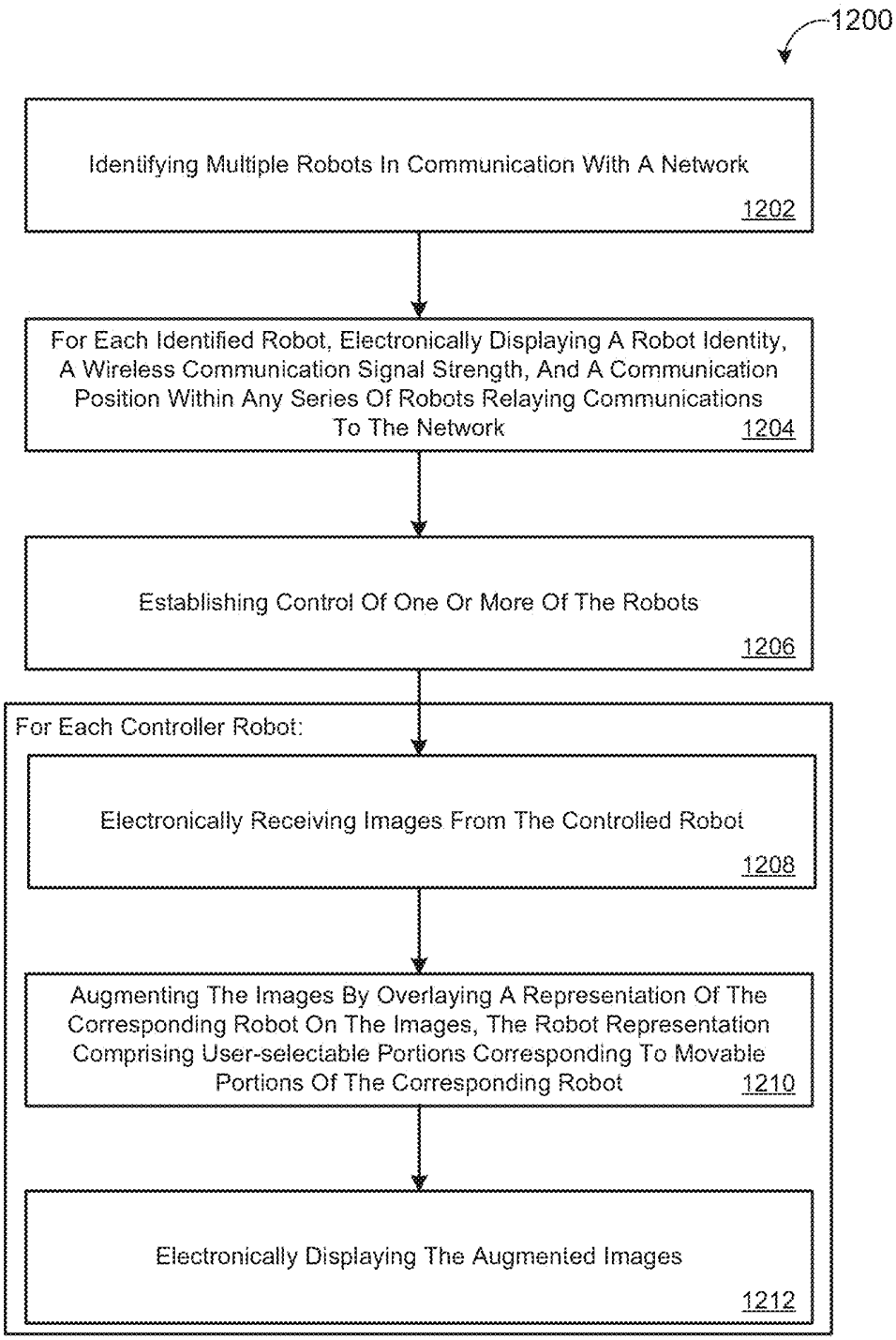
1200
Identifying Multiple Robots In Communication With A Network
1202
For Each Identified Robot, Electronically Displaying A Robot Identity, A Wireless Communication Signal Strength, And A Communication Position Within Any Series Of Robots Relaying Communications To The Network
1204
Establishing Control Of One Or More Of The Robots
1206
For Each Controller Robot:
Electronically Receiving Images From The Controlled Robot
1208
Augmenting The Images By Overlaying A Representation Of The Corresponding Robot On The Images, The Robot Representation Comprising User-selectable Portions Corresponding To Movable Portions Of The Corresponding Robot
1210
Electronically Displaying The Augmented Images
1212

FIG. 12

REMOTELY OPERATING A MOBILE ROBOT

CROSS REFERENCE TO RELATED APPLICATIONS

This U.S. patent application claims priority under 35 U.S.C. §119(e) to U.S. Provisional Application 61/924,433, filed on Jan. 7, 2014, which is hereby incorporated by reference in its entirety.

TECHNICAL FIELD

This disclosure relates to a method and a system for remotely controlling a robot and augmenting images captured by the robot.

BACKGROUND

Robots are useful in a variety of civilian, commercial, military, and law enforcement applications. For instance, some robots may inspect or search buildings with structural damage caused by earthquakes, floods, or hurricanes, or inspect buildings or outdoor sites contaminated with radiation, biological agents, such as viruses or bacteria, or chemical spills. Some robots carry appropriate sensor systems for inspection or search tasks.

There is an increasing need for an intuitive system for remotely controlling robots. In some situations, the robot operates within hazardous or dangerous conditions, e.g., the transport of hazardous materials, search and rescue operations, and military and law enforcement applications. In such situations, the user may not be within the vicinity of the robot and may not be able to see the robot. The user relies on sensors (e.g., cameras) that are located on or surrounding the robot to control the robot. Therefore, an intuitive tele-operation of the robot becomes particularly important.

SUMMARY

One aspect of the disclosure provides a method for operating a robot. The method includes electronically receiving images and augmenting the images by overlaying a representation of the robot on the images. The robot representation includes user-selectable portions corresponding to movable portions of the robot. The method further includes electronically displaying the augmented images and receiving an indication of a selection of at least one-user selectable portion of the robot representation. The method further includes electronically displaying an intent to command the selected at least one user-selectable portion of the representation and receiving an input representation of a user interaction with at least one user-selectable portion. The method also includes determining at least one movement parameter of at least one movable portion of the robot using inverse kinematics based on the received input and issuing a command to the robot based on the at least one movement parameter.

Implementations of the disclosure may include one or more of the following features. In some implementations, the received images are captured by an imaging device (e.g., camera) disposed on the robot or by an imaging device in the vicinity of the robot.

In some implementations, a representation of the robot includes at least one of a representation of a vehicle body, a gripper, a link, or an actuator. Additionally or alternatively, the method may include electronically displaying the intent to command the selected at least one-user selectable robot representation including modifying an appearance of the robot representation.

The method may include receiving the input representative of the user interaction from a touch display. The input includes at least one of a linear finger swipe, a curved finger swipe, a multi-finger swipe, a multi-finger gesture, a tap, or a prolonged press.

In some implementations, the method includes receiving the input representative of the user interaction with at least one user-selectable portion. The method further includes receiving a first input representative of a selection of a displayed object and receiving a second input representative of a selection of a robot behavior. The robot behavior is associated with the object. Additionally or alternatively, the robot behavior includes navigating the robot towards the object. The method may include receiving an indication of a selection of an alternate approach direction. In response to the indication, the robot behavior determines a drive path using odometry and/or inertial measurement signals from an inertial measurement unit of the robot to navigate the robot from a current location and a current approach direction to approach the object from the alternate approach direction. In some examples, the robot behavior includes grasping the object with a manipulator of the robot. The method may further include identifying in the images a plane of a ground surface supporting the robot and a location of the object with respect to the ground surface plane.

In some examples, the method further includes receiving an indication of a selection of a reverse-out behavior and executing the reverse-out behavior. The reverse-out behavior determines at least one reverse-movement parameter of the at least one movable portion of the robot using inverse kinematics to move the at least one movable portion of the robot in an opposite direction along a path moved according to the issued command, and commands the at least one movable portion of the robot based on the at least one reverse-movement movement parameter.

The method may further include receiving an indication of a selection of an anti-tip behavior and executing the anti-tip behavior. The anti-tip behavior receives inertial measurement signals from an inertial measurement unit of the robot and determines a location of a center of gravity of the robot. When the location of the center of gravity of the robot moves outside a stable volume of space, the anti-tip behavior commands deployment of an appendage of the robot (e.g., a flipper or an articulated arm) to alter the location of the center of gravity of the robot or brace the robot against a supporting surface to prevent tipping of the robot.

In some implementations, the method includes providing haptic feedback in response to the received input. The method may also include issuing a negative feedback response when the determined at least one movement parameter of the at least one movable portion of the robot based on the received input violates a movement policy or is unexecutable. The negative feedback response includes at least one of the haptic feedback response, an audio feedback response, or a visual feedback response. The visual feedback response includes displaying an indicator at or near any portions of the robot representation corresponding to any unmovable portions of the robot based on the received input.

Another aspect of the disclosure provides an operator controller unit for controlling a robot. The operator controller unit includes a screen and a processor in communication with the screen. The processor is configured to electronically receive images and augment the images by overlaying a representation of the robot on the images. The robot representa-

tion includes user-selectable portions corresponding to movable portions of the robot. The processer is further configured to electronically display the augmented images on the screen and receive an indication from the screen of a selection of at least one user-selectable portion of the robot representation. The processor is also configured to electronically display on the screen an intent to command the selected at least one user-selectable portion of the robot representation and receive an input from the screen representative of a user interaction with at least one user-selectable portion. The processer further determines at least one movement parameter of at least one movable portion of the robot using inverse kinematics based on the received input and issues a command to the robot based on the at least one movement parameter. In some implementations, the received images are captured by an imaging device disposed on the robot or by an imaging device located in a vicinity of the robot.

In some examples, the representation of the robot includes at least one of a representation of a vehicle body, a gripper, a link, or an actuator. Additionally or alternatively, the unit includes electronically displaying the intent to command the selected at least one user-selectable robot representation portion including modifying an appearance of the representation of the robot (e.g., by highlighting the robot representation).

The operator controller unit receives the input representative of the user interaction from a touch display and including at least one of a linear finger swipe, a curved finger swipe, a multi-finger swipe, a multi-finger gesture, a tap, or a prolonged press. In some implementations, the unit receives an input representative of a user interaction with at least one user-selectable portion. The unit further receives a first input representative of a selection of a displayed object and receiving a second input representative of a selection of a robot behavior. The robot behavior is associated with the object. Additionally or alternatively, the robot behavior includes navigating the robot towards the object. Receiving the input representative of the user interaction further includes receiving an indication of a selection of an alternate approach direction. In response to the indication, the robot behavior determines a drive path using odometry and/or inertial measurement signals from an inertial measurement unit of the robot to navigate the robot from a current location and a current approach direction to approach the object from the alternate approach direction. In some examples, the robot behavior includes grasping the object with a manipulator of the robot. Additionally or alternatively, the processor executes a surface recognition routine that identifies in the images a plane of a ground surface supporting the robot and a location of the object with respect to the ground surface plane.

In some implementations, the processor is configured to receive an indication of a selection of a reverse-out behavior and execute the reverse-out behavior. The reverse-out behavior determines at least one reverse-movement parameter of the at least one movable portion of the robot using inverse kinematics to move the at least one movable portion of the robot in an opposite direction along a path moved according to the issued command, and commands the at least one movable portion of the robot based on the at least one reverse-movement parameter.

The processor may be configured to receive an indication of a selection of an anti-tip behavior and execute the anti-tip behavior. The anti-tip behavior receives inertial measurement signals from an inertial measurement unit of the robot and determines a location of a center of gravity of the robot. The anti-robot behavior commands deployment of an appendage of the robot to alter the location of the center of gravity of the robot or brace the robot against a supporting surface to prevent tipping of the robot, when the location of the center of gravity of the robot moves outside a stable volume of space.

In some implementations, the operator controller unit includes a vibration device. The processor is configured to command the vibration device to provide haptic feedback in response to the received input. Additionally or alternatively, when the determined at least one movement parameter of the at least one movable portion of the robot based on the received input violates a movement policy or is unexecutable, the processor may be configured to issue a negative feedback response. The negative feedback response includes at least one of the haptic feedback response, an audio feedback response, or a visual feedback response. The visual feedback response includes displaying on the screen an indicator at or near any portions of the robot representation corresponding to any unmovable portions of the robot based on the received input.

Another aspect of the disclosure provides a method for operating multiple robots. The method includes identifying multiple robots in communication with a network and for each identified robot, electronically displaying a robot identity, a wireless communication signal strength, and a communication position within any series of robots relaying communications to the network. The method further includes establishing control of one or more of the robots, and for each controlled robot, electronically receiving images from the controlled robot, augmenting the images by overlaying a representation of the corresponding robot on the images, and electronically displaying the augmented images. The robot representation includes user-selectable portions corresponding to movable portions of the corresponding robot.

In some implementations, for at least one controlled robot, the method includes receiving an indication of a selection of at least one user-selectable portion of the corresponding robot representation of the at least one controlled robot, electronically displaying an intent to command the selected at least one user-selectable portion of the corresponding robot representation, and receiving an input representative of a user interaction with at least one user-selectable portion. For at least the one controlled robot, the method also includes determining at least one movement parameter of at least one movable portion of the corresponding robot using inverse kinematics based on the received input and issuing a command to the corresponding robot based on the at least one movement parameter. The representation of the at least one controlled robot includes at least one of a representation of a vehicle body, a representation of a gripper, a representation of a link, or a representation of an actuator. Electronically displaying the intent to command the selected at least one user-selectable robot representation portion includes modifying an appearance of the robot representation. In some examples, the input representative of the user interaction is received from a touch display and includes at least one of a linear finger swipe, a curved finger swipe, a multi-finger swipe, a multi-finger gesture, a tap, or a prolonged press.

In some implementations, receiving the input representative of the user interaction with at least one user-selectable portion includes receiving a first input representative of a selection of a displayed object and receiving a second input representative of a selection of a robot behavior. The robot behavior is associated with the object. The robot behavior includes navigating the at least one controlled robot towards the object. The method also includes receiving an indication of a selection of an alternate approach direction. The robot behavior determines a drive path using odometry and/or inertial measurement signals from an inertial measurement unit of the robot to navigate the at least one controlled robot from

a current location and a current approach direction to approach the object from the alternate approach direction. The robot behavior my include grasping the object with a manipulator of the robot. In some examples, the method includes identifying in the images a plane of a ground surface supporting the at least one controlled robot and a location of the object with respect to the ground surface plane.

In some implementations, the method further includes receiving an indication of a selection of a reverse-out behavior and executing the reverse-out behavior. The reverse-out behavior determines at least one reverse-movement parameter of the at least one movable portion of the robot using inverse kinematics to move the at least one movable portion of the at least one controlled robot in an opposite direction along a path moved according to the issued command, and commands the at least one movable portion of the at least one controlled robot based on the at least one reverse-movement parameter.

The method may include providing haptic feedback in response to the received input. In some examples, the method includes issuing a negative feedback response when the determined at least one movement parameter of the at least one movable portion of the robot based on the received input violates a movement policy or is unexecutable. The negative feedback response includes at least one of the haptic feedback response, an audio feedback response, or a visual feedback response. The visual feedback response includes displaying an indicator at or near any portions of the robot representation corresponding to any unmovable portions of the robot based on the received input.

In some implementations, the method further includes receiving an indication of a selection of a series of robots in communication with the network and an order of deployment of a communication repeater deployment carried by each of the selected robots, and issuing repeater deployment instructions to each of the selected robots. Each repeater instruction indicates a repeater deployment order of the corresponding robot with respect to the other selected robots. Moreover, each selected robot deploys its carried communication repeater when the robot maneuvers to or near an edge of a wireless communications reception area of the network. Each repeater instruction includes a repeater deployment location. The method may further include communicating with and using a remote scalable computing resource to execute commands demanding a threshold computing capacity.

Yet another aspect of the disclosure provides a system for controlling multiple robots. The system includes a network, multiple robots that are wirelessly communicating with the network, and multiple operator control units in communication with the network. Each operator controller unit includes a screen and a processor in communication with the screen. The processor is configured to identify the multiple robots in communication with the network and establish control of one or more of the robots. For each identified robot, the processor is configured to electronically display a robot identity, a wireless communication signal strength, and a communication position within any series of robots relaying communications to the network. In addition, for each controlled robot, the processor is configured to electronically receive images from the one or more controlled robots, augment the images by overlaying a representation of the corresponding robot on the images, and electronically display the augmented images. The robot representation includes user-selectable portions corresponding to movable portions of the corresponding robot.

In some implementations, for at least one controlled robot, the processor is configured to receive an indication of a selection of at least one user-selectable portion of the corresponding robot representation of the at least one controlled robot and electronically display an intent to command the selected at least one user-selectable portion of the corresponding robot representation. For the at least one controlled robot, the processor is also configured to receive an input representative of a user interaction with at least one user-selectable portion, determine at least one movement parameter of at least one movable portion of the corresponding robot using inverse kinematics based on the received input, and issue a command to the corresponding robot based on the at least one movement parameter. The representation of the at least one controlled robot includes at least one of a representation of a vehicle body, a representation of a gripper, a representation of a link, or a representation of an actuator. Electronically displaying the intent to command the selected at least one user-selectable robot representation portion includes modifying an appearance of the robot representation. In some examples, the input representative of the user interaction is received from a touch display and includes at least one of a linear finger swipe, a curved finger swipe, a multi-finger swipe, a multi-finger gesture, a tap, or a prolonged press.

The details of one or more implementations of the disclosure are set forth in the accompanying drawings and the description below. Other aspects, features, and advantages will be apparent from the description and drawings, and from the claims.

DESCRIPTION OF DRAWINGS

FIG. **1** is a schematic view of an exemplary robot communicating with a remote computing device.

FIG. **2**A is a front perspective view of an exemplary robot.

FIG. **2**B is a side perspective view of an exemplary robot.

FIG. **3**A is a perspective view of an exemplary mobile inspection robot.

FIG. **3**B is an elevated perspective view of an exemplary mobile inspection robot.

FIG. **4**A is a front perspective view of an exemplary operator control unit.

FIGS. **4**B-**4**I are schematic views of an exemplary robot representation showing different robot portions selected.

FIG. **4**J is a front view of the display of an exemplary operator control unit displaying gripper camera feedback.

FIG. **4**K is a front view of an exemplary operator control unit displaying drive and turn lanes.

FIG. **4**L is a front view of an exemplary operator control unit displaying waypoints selected that a robot traverses and a three dimensional representation of a robot.

FIG. **4**M is a front view of an exemplary operator control unit displaying an exemplary augmented image.

FIG. **4**N is a front view of an exemplary operator control unit displaying an exemplary augmented image without the video feed.

FIG. **5**A is schematic view an exemplary remote video view from a robot positioned in a hallway.

FIG. **5**B is a schematic view of an exemplary hybrid map incorporating the remote video view shown in FIG. **5**A, together with a map indicating room numbers.

FIG. **6**A provides an exemplary remote view of a remote video window of a telepresence software application.

FIG. **6**B is a schematic view of an exemplary map of the area shown by the remote view of FIG. **6**A.

FIG. **6**C is a schematic view of an exemplary preview view of a telepresence software application.

FIG. **6**D is a schematic view of the map shown in FIG. **6**B with a robot icon and a corresponding camera field of view.

Tesla Exhibit 1009.031

FIG. **6**E is a schematic view of an exemplary preview view of a telepresence software application.

FIG. **6**F is a schematic view of the map shown in FIG. **6**B with a robot icon and a corresponding camera field of view.

FIGS. **7**A-**7**C are schematic views of exemplary robot systems.

FIGS. **8**A-**8**C are front views of exemplary operator control units (OCUs) displaying different views of the OCUs while controlling one or more robots.

FIG. **9** is a schematic view of an exemplary robot.

FIG. **10** is a schematic view of an exemplary robot control system.

FIG. **11** provides an exemplary arrangement of operations for a method of operating a mobile robot.

FIG. **12** provides an exemplary arrangement of operations for a method of operating multiple mobile robots.

Like reference symbols in the various drawings indicate like elements.

DETAILED DESCRIPTION

Autonomous and semi-autonomous robots can be used to monitor, observe, survey, and/or service people or equipment. The robot may operate continuously for a duration of time without human intervention or be teleoperated by a remote user.

Referring to FIG. **1**, a user **10** may use a remote operator control unit (OCU) **100** to teleoperate a remote robot **200** from a distance. The OCU may include a computing device **102** (e.g., a computer processor) and non-transitory memory **104** in communication with the computing device **102**. The non-transitory memory **104** may store instructions for execution on the computing device **102**.

The robot **200** may not be within the field of view of the user **10**. In such cases, the OCU **100** is capable of communicating over a network **20**. The network **20** may include any type of network that allows sending and receiving of communication signals (e.g., a wireless telecommunication network, a cellular telephone network, a time division multiple access (TDMA) network, a code division multiple access (CDMA) network, a global system for mobile communications (GSM), a third generation (3G) network, a fourth generation (4G) network, a satellite communications network, and other communication networks). The network **20** may include one or more of a Wide Area Network (WAN), a Local Area Network (LAN), and a Personal Area Network (PAN). In some examples, the network **20** includes a combination of data networks and telecommunication networks. In addition, the network **20** may switch between any of the above networks depending on the strength of the signal of the specific type of network.

Cloud storage **24** can be a model of networked computer data storage where data is stored on multiple virtual servers, generally hosted by third parties. By providing communication between the robot **200** and a cloud **22**, information gathered by the robot **200** can be securely viewed by authorized users **10** via a web based information portal **26**. The portal **26** may be used for gathering and/or providing information, such as user information, facility status information, and robot status information. Information can be integrated with third-party information to provide additional functionality and resources to the user **10** and/or the robot **200**. The robot system architecture **12** can facilitate proactive data collection. For example, data **502** collected using the sensor system **500** of the robot **200** (see e.g., FIGS. **2**B and **7**) can be communicated to the cloud **22** (e.g., wireless communication, such as Wi-Fi, radio frequency (RF), etc.) for collection, storage, and/or analysis. Moreover, the remote user **10** may access the received sensor data **502** for review, analysis, and control of the robot **200**. In some examples, the cloud service **22** executes an application outputting data **23** that may be communicated to the robot **200**. For example, the cloud service **22** may process received image data **502** (captured by the robot **200**) and return a processed data set **23** (e.g., a layout map of the environment) to the robot **200** (e.g., to a controller **400**). The controller **400** may issue drive commands to the drive system **215** based on the received processed data set **23** for maneuvering about an area. In some examples, the cloud **22** receives data **102** from the user **10** using the remote OCU **100**. The cloud **22** may process the received information from the robot **200** and send the processed information **27** to the OCU **100**.

The cloud **22** provides cloud computing and/or cloud storage capabilities. Cloud computing may provide Internet-based computing, whereby shared servers provide resources, software, and data to computers and other devices on demand. For example, the cloud **22** may be a cloud computing service that includes at least one server computing device, which may include a service abstraction layer and a hypertext transfer protocol wrapper over a server virtual machine instantiated thereon. The server computing device may be configured to parse HTTP requests and send HTTP responses. Cloud computing may be a technology that uses the Internet and central remote servers to maintain data and applications. Alternatively, the Cloud may be a local server or computational device that emulates a subset of the available data and capability of the Cloud, with an experience that is seamless to the end user based on local or cloud connectivity. Cloud computing can allow users to access and use applications without installation and access personal files at any computer with internet access. Cloud computing allows for relatively more efficient computing by centralizing storage, memory, processing and bandwidth. The cloud **22** can provide scalable, on-demand computing power, storage, and bandwidth, while reducing robot hardware requirements (e.g., by freeing up CPU and memory usage). Robot connectivity to the cloud **22** allows automatic data gathering of robot operation and usage histories without requiring the robot **200** to return to a base station. Moreover, continuous data collection over time can yield a wealth of data that can be mined for marketing, product development, and support.

FIGS. **2**A-**2**B illustrate two exemplary mobile robotic vehicles or robots **200** that may be controlled by the OCU **100**. The robot **200** shown includes a track driven drive system **215** having flippers **230**. Other mobility platforms, configurations and morphologies are possible as well, such as crawling or walking platforms, etc. The robots **200** can be designed to move about in a variety of environments, including an urban environment of buildings (including staircases), streets, underground tunnels, building ruble, and in vegetation, such as through grass and around trees. The robots **200** may have a variety of features, which provide robust operation in these environments, including impact resistance, tolerance of debris entrainment, and invertible operability.

In some examples, the robot **200** includes a main body **210** (or chassis) having a drive system **215** supported by the main body **210**. The main body **210** has right and left sides **210***a*, **210***b* as well as a leading end **210***c*, a trailing end **210***d* and a center of gravity CG_M. The robot **200** may be electrically powered (e.g., by a bank of standard military BB-2590 replaceable and rechargeable lithium-ion batteries).

In some implementations, the drive system **215** includes right and left driven track assemblies **220***a*, **220***b* (also referred to as the main tracks **220**) mounted on the corre-

sponding right and left sides **210***a*, **210***b* of the main body **210** and having right and left driven tracks **222***a*, **222***b*, respectively. Each driven track **222***a*, **222***b* is trained about a corresponding front wheel, **224***a*, **224***b*, which rotates about a drive axis **15**. The tracks **222***a*, **222***b* provide a relatively large traction area (e.g., covering a foot print of the main body **210** and the tracks **222***a*, **222***b*), allowing the robot **200** to traverse varied terrain, such as cables, stairs, uneven surfaces, etc. Although the robot **200** is depicted as having skid steer driven tracks, other drive systems are possible as well, such as differentially driven wheels, articulated legs, etc.

Referring to FIG. **2**A, in some implementations, the robot **200** includes at least one extendable flipper **230** mounted on the main body **210**. In the example shown, the robot **200** includes right and left flippers **230***a*, **230***b*, each having a flipper track **240**, **240***a*, **240***b* trained about a flipper drive wheel **242***a*, **242***b*, which is driven about a drive axis **15** defined at a pivot end **130***d* of the flipper **230***a*, **230***b*.

In the example shown in FIG. **2**B, the robot **200** is depicted without any flippers **230**. The robot **200** may be configured to releasably receive one or more flippers **230** onto the main body **210** (e.g., onto and concentric with one of the front drive wheels **224***a*, **224***b* at the leading end **210***c* of the main body **210**). The main body **210** may include one or more cameras **218**, **219** disposed near the leading end **210***c* of the main body **210** and may be positioned to have a field of view directed forward and/or upward. The camera(s) **218**, **219** may capture images and/or video of the robot environment for navigating the robot **200** and/or performing specialized tasks.

Referring to FIGS. **3**A and **3**B, in some implementations, a mobile robot **300** includes a robot body **310** (or chassis) that defines a forward drive direction F. The robot **300** also includes a drive system **315** and a sensor system **500**, each supported by the robot body **310** and in communication with a controller **400** that coordinates operation and movement of the robot **300**. A power source **305** (e.g., battery or batteries) can be carried by the robot body **310** and is in electrical communication with, and delivers power to, each of these components, as necessary.

In some implementations, the drive system **315** may provide omni-directional and/or holonomic motion control of the robot **300**. As used herein the term "omni-directional" refers to the ability to move in substantially any planar direction, i.e., side-to-side (lateral), forward/back, and rotational. These directions are generally referred to herein as x, y, and θz, respectively. Furthermore, the term "holonomic" is used in a manner substantially consistent with the literature use of the term and refers to the ability to move in a planar direction with three planar degrees of freedom, i.e., two translations and one rotation. Hence, a holonomic robot has the ability to move in a planar direction at a velocity made up of substantially any proportion of the three planar velocities (forward/back, lateral, and rotational), as well as the ability to change these proportions in a substantially continuous manner.

In some implementations, the drive system **315** includes first, second, and third driven drive wheels **310***a*, **310***b*, **310***c* equally spaced (e.g., trilaterally) about a vertical axis Z; however, other arrangements are possible as well, such as four drive wheels equally spaced about the Z axis. The drive wheels **310***a-c* may define a transverse arcuate rolling surface (i.e., a curved profile in a direction transverse or perpendicular to the rolling direction D_R), which may aid maneuverability of the holonomic drive system **315**. Other drive wheel arrangements are possible as well, such as a single drive wheel (e.g., holonomically driven), only right and left drive wheels, or four drive wheels.

The robot body **310** may include a base **320** supporting the drive system **315**, at least one leg **330** extending upwardly from the base **320**, and a torso **340** supported by the at least one leg **330**. The leg **330** may be extendible to alter a height of the torso **340**, which may support one or more sensors of the sensor system **500**. The base **320** may include enough weight (e.g., by supporting the power source **305** (batteries) to maintain a low center of gravity CG_B of the base **320** and a low overall center of gravity CG_R of the robot **300** for maintaining mechanical stability. The robot body **310** may also include a neck **350** supported by the torso **340**. The neck **350** supports a head **360** by providing panning and tilting of the head **360** with respect to the torso **340**. In the example shown, the neck **350** includes a rotator **352** and a tilter **354**. The rotator **352** may provide a range of angular movement θ_R (e.g., about the Z axis) of between about 90° and about 360°. Other ranges are possible as well. In some examples, the robot **300** may adjust a height of the torso **340** (via the leg **330**), articulate the head **360**, and/or move using the drive system **315**. As will later be discussed, a remote user **10** may manipulate the height of the torso **340** (via the leg **330**), articulate the head **360**, and/or move using the drive system **315** via the OCU **100**.

The head **360** may include a tablet dock **361** for releasably receiving one or more computing tablets **370**, also referred to as a web pad or a tablet PC, each of which may have a touch screen. The computing tablet **370** may execute instructions to display a graphical user interface for operating and/or interacting with the robot **300**.

Referring back to FIGS. **2**A-**2**B, the robot **200** may include one or more arms **250**, **250***a*, **250***b* (e.g., articulated arms) each having a pivot end **252**, pivotally coupled to the main body **210** and a distal end **254**, **254***a*, **254***b* that may be configured to receive a head **260** (as shown on arm **250***b*) or a gripper **270**. In some examples, the arm **250** includes a first portion **256** and a second portion **258** connected by a joint **257**.

In some implementations, the robot **200** includes first and/or second arms **250***a*, **250***b* each having a pivot end **252***a*, **252***b* pivotally coupled to the main body **210**. Both arms **250***a*, **250***b* may be attached at a common location or region of the main body **210**, such as the leading end **210***c* or the trailing end **210***d* (as shown) of the main body **210**, the arms **250***a*, **250***b* can be disposed at opposite ends of the main body **210** as well. As shown in FIG. **2**A, a gripper **270** is mounted on the distal end **254***a* of the first arm **250***a* and a head **260** is mounted on the distal end **254***b* of the second arm **250***b*. In some examples, a first gripper is mounted on the distal end **254***a* of the first arm **250***a* and a second gripper **270** is mounted on the distal end **254***b* of the second arm **250***b*. In the example shown, the gripper **270** includes a gripper camera **272** and first and second opposing fingers or tongs **274***a*, **274***b* for grasping objects **114**.

The arm **250**, **250***a*, **250***b* has an arm center of gravity CG_A and the head **260**, **360** has a center of gravity CG_H. The head **260**, **360** may include a camera **262**, **362** (e.g., visible light and/or infrared camera), radar, LIDAR (Light Detection And Ranging, which can entail optical remote sensing that measures properties of scattered light to find range and/or other information of a distant target), LADAR (Laser Detection and Ranging), a communication device (radio frequency, wireless, etc.), and/or other components. The robot **200** may move the arm **250**, **250***a* to position the head camera **262**, **362** to provide a better view of the front of the robot **200** so the user **10** may better control the robot **200** due to better visibility of what is around the robot **200**.

In some implementations, the robot **200** includes a controller **400** in communication with the drive system **215**, **315** and

any arm(s) **250**, **250***a*, **250***b* and head(s) **260**, **360** or gripper(s) **270** mounted on the arm(s) **250**, **250***a*, **250***b*. The controller **400** may issue drive commands to one or more motors driving the main tracks **220** and the flipper tracks **240**, **240***a*, **240***b* or the legs **330**. Moreover, the controller **400** may issue rotational commands to a flipper motor to rotate the flippers **230** about the drive axis **15**. The controller **400** may include one or more computer processors and associated memory systems. The controller **400** of the robot **200** may include a communication system **482**, which includes, for example, a radio to communicate with a remote OCU **100** to receive commands and issue status and/or navigation information.

Referring back to FIG. **1**, in some implementations, a teleoperation software application **101** executes on at least one of the robot controller **400**, the cloud **22**, or the OCU **100**. In some examples, a portion of the teleoperation software application **101** executes on one or more of the aforementioned devices. The teleoperation software application **101** allows one or more users **10** to interact with the robot **200** (e.g., to drive the robot **200**) and/or remotely with other people or objects **114** adjacent the robot **200**, **300** through telepresence features of the robot **200**.

Referring to FIGS. **4**A-**4**M, the OCU **100** may include a display (e.g., LCD or touch screen) **110**, a keyboard, and one or more auxiliary user inputs, such as a joystick or gaming unit in communication with the computing device **102**. As shown, the OCU **100** is a touch screen tablet. The OCU **100** provides a user interface of the teleoperation software application **101** that is rendered on the display **110** of the OCU **100** and allows an operator or user **10** to control the robot **200** from a distance. In some examples, the user **10** can select different levels of human control over the robot **200**, ranging from a teleoperation mode, in which the user **10** directly controls the motors and actuators on the robot **200**, to autonomous operation, in which the user **10** passes higher-level commands to the robot **200**. In partially autonomous operation, the robot **200** can perform tasks, such as following a perimeter or wall, recovering from getting stuck in an opening or due to high centering on an obstruction, evading a moving object **114**, or seeking light.

The OCU **100** includes a touchscreen display **110**. The touchscreen display **110** is configured to receive gestures from a user **10** and/or a pen (e.g., stylus). The display **110** may be configured for multi-touch gestures, which allows a user **10** to use one or more fingers simultaneously on the display **110**. The display **110** eliminates the need for a mouse, a touchpad, a gamepad, or any other intermediate devices. Therefore, the only equipment needed to control the robot **200** is a touchscreen OCU **100** instead of other equipment and accessories to manipulate the robot **200**. In some implementations, the OCU **100** is configured to control more than one robot **200**. For example, the user **10** may select which robot **200** the user **10** wants to manipulate: the one having the flippers or the one having a leg or legs. In some examples, each robot **200** has different configurations; therefore, the OCU **100** is updated based on the robot **200** the user **10** selects to manipulate (see FIGS. **7**A-**8**C).

The display **110** of the OCU **100** is configured to show a remote view **120**, such as a video feed of the robot's environment. The video feed **120** may be generated by one of the cameras **218**, **219**, **262**, **362** of the robot **200**. An augmented image **121** is overlain on the video feed **120** (FIG. **4**N shows the augmented images **121** without the video feed). The augmented image **121** includes a robot representation **130** overlain on the video feed view **120**. The robot representation **130** includes user-selectable portions **132** (e.g., a pivot end representation **132***a*, a first arm portion representation **132***b*, a joint representation **132***c*, a second arm portion representation **132***d*, a gripper representation **132***e*, a robot body representation **132***f*, and a flipper **132***g*). As shown, the robot representation **130** is located on the bottom right corner of the display **110**, but other locations are possible as well. In some examples, the user **10** can move the robot representation **130** to another portion of the display **110**. Additionally or alternatively, the user **10** may adjust the size of the robot representation **130** or may select to view the robot representation **130** as a three-dimensional view (as shown in FIGS. **4**L and **4**M). When a user **10** selects a portion of the robot representation **130**, the software **101** changes the visual appearance of the user selectable portion **132** (e.g., color change or highlights) and displays a selected portion **134**, thus displaying an intent to command the selected portion.

Referring to FIGS. **4**B-**4**G, FIG. **4**B shows the robot representation **130** without any user selectable portions **132** selected by the user **10**. If the user **10** wants to move the gripper **270** of the robot **200**, the user **10** may select the gripper representation **132***e* that is displayed on the display **110** of the OCU **100** by touching the gripper representation **132***e* with his/her finger. The gripper representation **132***e* is highlighted, as a gripper selected portion **134***e*, as shown in FIG. **4**C, to indicate that the gripper **270** is ready for receiving a command. FIG. **4**D shows the first arm portion representation **132***b* as a selected portion **134***b*; FIG. **4**E shows the joint representation **132***c* as a selected portion **134***c* of the joint **257** that connects the first and second arm portions **256**, **258**; FIG. **4**F shows the second arm representation **132***d* as a selected portion **134***d*; FIG. **4**G shows a pivot end representation **132***a* selected as a selected portion **134***a*; FIG. **4**H shows a body representation **132***f* as a selected portion **134***f*; and FIG. **4**I shown a flipper representation **132***g* as a selected portion **134***g*. In addition, the user **10** may select other portions of the robot **200** to manipulate, such as the robot body **210** as a whole, or the flipper(s) **230**, or any other portion. As shown, the representation **130** is representing a robot **200**, having a flipper **230**; however, the OCU **100** may be adjustable to represent other robots. The user **10** may select the gripper representation **132***e* and then touch an object **114** displayed on the display **110**. The robot **200** traverses the floor to reach the object **114**. In some examples, the robot **200** stops within a predetermined distance from the object **114**. While in other examples, the robot **200** may grab the object **114**.

Referring again to FIGS. **4**A-**4**I, in some implementations, the OCU **100** includes a vibration device **106** in communication with the computing device **102** (also referred to as a processor). The processor **102** is configured to command the vibration device **106** to provide haptic feedback in response to a received input from a user **10**. In some examples, the OCU **100** receives an input from a user **10** (e.g., via the screen **110**) and when at least one movement parameter of at least one movable portion of the robot **200** based on the received input violates a movement policy or is unexecutable, the processor **102** of the OCU **100** may be configured to issue a negative feedback response. The negative feedback response includes at least one of a haptic feedback response (e.g., using the vibration device **106**), an audio feedback response, or a visual feedback response. The visual feedback response includes displaying on the screen **110** an indicator at or near any portions of the robot representation **130** corresponding to any unmovable portions of the robot **200** based on the received input. Therefore, if the user **10** inputted on the OCU **100** that the user **10** wants the robot **200** to move its gripper **270** to a first position, and the gripper **270** is not capable of moving to the first position due to a constrain in the movement of the arm **250**, then the processor **102** displays an indicator on the arm

representation **131**, alters an appearance of the arm representation **131**, or otherwise informs the user **10** that the motion selected may not be completed due to a lack of motion clearance of the gripper **270**. Thus, the robot **200** is configured to provide dynamic feedback of its motions while the user **10** remotely manipulates the robot **200** and parts thereof.

The controller **400** (and/or the OCU **100** or remote resources (e.g., cloud resources **22**) in communication with the controller **400** and/or the OCU **100**) may use kinematics equations to determine joint parameters of the arm **250** to provide a desired position of an end-effector **270** (e.g., griper). The controller **400** may use motion planning to specify movement of the robot **200**, **300** so that its end-effector **270** achieves a desired task. Inverse kinematics transforms the motion plan into joint actuator trajectories for the robot **200**, **300**. The movement of a kinematic chain (i.e., the chain of rigid segments joined by joints), whether it is the actual robot **200**, **300** or the robot representation **130** (e.g., an animated character), is modeled by the kinematics equations of the chain. These equations define the configuration of the chain in terms of its joint parameters. Forward kinematics uses the joint parameters to compute the configuration of the chain, and inverse kinematics reverses this calculation to determine the joint parameters that achieves a desired configuration.

In some implementations, the controller **400** calculates inverse kinematics of the robot movement to determine an end position of a robot joint from a first position that is different than the end position. Inverse kinematics uses kinematic equations of the robot **200** to determine joint parameters that provide a desired position of an end-effector. Inverse kinematics are more difficult to calculate than forward kinematics, which is the use of kinematic equations of a robot **200** to determine the position of the end-effector from specific values for the joint parameter. Inverse kinematics is mostly used for robotic assemblies having one or more rigid bodies (e.g., arms) connected by joints (serial manipulators). Therefore, when the user **10** manipulates the gripper representation **132***e*, the controller **400** uses the inverse kinemantics algorithms to calculate the movement of the arm representation **131** and the robot arm **250**. However, when the user **10** manipulates the pivot end representation **132***a*, forward kinematic algorithms are used to determine the location of the arm representation **131** and thus the arm **250** at the end position. When the user **10** manipulates the pivot end representation **132***a*, the representation of the whole arm **131** moves, because the pivot end representation **132***a* controls the movement of the arm **250**. The controller **400** calculates the movement of the other arm portions **250***a*, **250***b* to avoid hitting any surrounding objects **114** or the robot **200** itself. The inverse kinematics formulas allow the controller **400** to calculate the joint parameters that position the robot arm **250** to pick up an object **114**.

If the arm **250** has several degrees of freedom, the trajectory of moving an arm portion **250***a*, **250***b* or an end effector **270** along an array to an end point causes all of the other connected arm portions/joints to move accordingly to land the selected member at an end location. For example, the controller **400** may determine, using inverse kinematics formulas, movements of two arm portions **250***a*, **250***b* and/or an end-effector **270** joined by one or more joints to position the end-effector **270** in a location at the end of an array.

Referring to FIG. **4**J, in some implementations, the user **10** manipulates the robot **200** to grab an object **114** located at a distance from a current robot **200** location. The user **10** may make such a selection by selecting the object **114** on the display **110**. In some examples, the user **10** touches the object **114** twice, indicating that the robot **200** should go to the object **114** to grab it. The controller **400** calculates the resolved motion of the robot **200** to get to the object **114** from its current position and grab the object **114**. Resolved motion is the process of detailing a task (e.g., a movement of the robot **200**) into discrete motions. For example, when the user **10** manipulates a robot representation **130** to grab an object **114** located at a distance from the robot **200**, the robot **200** executes the task while avoiding walls, objects **114**, and falling down a cliff (e.g., stairs). The resolved motion algorithms consider input from the sensor system **500** to evaluate how the robot **200** will move from a current robot location to the destination. The resolved motion algorithm produces a continuous motion that connects a starting point of the robot **200** to a destination point of the robot **200** while avoiding collisions with objects **114**. Therefore, a user **10**, looking at a robot **200** in motion, sees a robot **200** moving across a room seamlessly and effortlessly.

Several robot manipulation gestures are available to the user **10** for manipulating the robot **200**. Once the user **10** makes a selection (i.e., robot portion highlighted) of the portion of the robot representation **130** that he/she wants to maneuver, the user **10** may make several gestures based on the type of movement or the end result of the robot position or location. These gestures may include a swipe on the display **110** to indicate a movement of the representation portion. The user swipe may be a short swipe or a long swipe. A long swipe, having a threshold time of swipe greater than a predetermined time, may indicate a greater range of motion or speed of the represented portion than a shorter swipe. Other gestures may include a curved swipe or a straight swipe.

In some examples, the user **10** selects a representation of a robot portion that the user **10** wants to maneuver. Then the user **10** swipes his/her finger(s) along the display **110** to indicate a desired motion for that selected portion. The user **10** removes his/her finger from the display **110** and the robot **200** mimics the movement of the selected representation portions **134**. Therefore, the robot **200** executes the movement when the user **10** stops the manipulation of the portion of the robot representation **130**. Thus the display **110** updates the movement of the robot representation **130** as the user **10** is manipulating the representation **130** on the display **110**; however, the robot **200** executes the motion when the user **10** ceases manipulation of the robot representation **130** and releases his/her fingers from the display **110**. The behavior allows the user **10** to see how the manipulation of the robot representation **130** will result before the robot **200** executes the movement.

In some examples, the robot **200** executes the movement of the manipulation of the robot representation **130** in real-time as the user **10** is manipulating a portion of the robot representation **130**. Therefore, if the user **10** selects the gripper representation **140** and moves the gripper representation **140**, the user **10** may view in real time on the display **110** the video feedback of the gripper **270** moving as the user **10** is moving the gripper representation **140**.

Referring back to FIG. **4**A, the display **110** may be divided into quadrants **110***a-d*. In some examples, a visual marker **112** separates the quadrants **110***a-d* from one another. Each quadrant **110***a-d* may be independent from the other quadrants **110***a-d* and may control a different portion of the robot **200**. For example, the top quadrants **110***a-b* may be configured to control the gripper **270**, where the first quadrant **110***a* controls the first tong **274***a* and the second quadrant **110***b* controls the second tong **274***b*. The user **10** may independently control each tong **274***a*, **274***b* of the gripper **270**, which may be

particularly helpful when attempting to grab an object **114**. The bottom quadrants **110***c-d* each controls one drive track **222***a*, **222***b* (robot **200**).

The quadrants **110***a-d* therefore include a first quadrant **110***a* located on a Northwest portion of the display **110**, a second quadrant **110***b* located on the Northeast portion of the display **110**, a third quadrant **110***c* located on the Southwest portion of the display **110**, and a fourth quadrant **110***d* located on the Southeast portion of the display **110**. When a user **10** swipes two fingers simultaneously towards a North direction, where one finger is positioned in the third quadrant **110***c* and the other in the fourth quadrant **110***d*, with the initial finger position at A and the end position at B, the robot **200** moves in the forward drive direction F. However, if the user **10** moves his/her finger in the third quadrant **110***c* from position A to position B and either does not move his/her fingers in the third quadrant **110***c* or rests his/her figure in position A, then the left side of the robot **200** keeps going forward and the right side stops, causing the robot **200** to turn right with respect to the forward drive direction F. If the user **10** swipes his/her finger in the third quadrant **110***c* from position A to position B, and swipes his/her other finger in the fourth quadrant **110***d* from position B to position A, then the robot **200** turns to the right with respect to the forward drive direction F. The same applies for turning left. The user **10** may perform other gestures to control the robot **200** into turning. For example, if the user **10** wants to control the robot **200** to turn to the right, then the user **10** may move his/her finger in the fourth quadrant **110***d* from position B to position A, which causes the robot **200** to make a sharp turn to the right. To make a left turn, the user **10** may make the opposite movement described with respect to making a right turn. In some examples, if the user **10** wants the robot **200** to make a quick stop, the user **10** moves both fingers in the bottom quadrants **110***c-d* from position B to position A simultaneously. If the user **10** wants to increase the speed of the robot **200** the user **10** may simultaneously move both fingers in the third and fourth quadrants **110***c*, **110***d* to the north. In some operational modes, a quadrant's active real estate may enlarge, at times covering the whole screen. In this situation, virtual joysticks associated with a quadrant **110***a-d* can now be activated from anywhere inside the now enlarged quadrant **110***a-d*. For example, a user **10** may enlarge the drive quadrant, thus allowing the user **10** to drive the robot **200** using finger gestures on any part of the screen **110**.

The gripper **270** may be manipulated similarly, with quadrants **110***a-d* containing active virtual joysticks having variable sizes. A swipe by the user **10** of both fingers in the first quadrant **110***a* from A to B results in the movement of the gripper, relative to the camera frame, into the video frame while a swipe in the second quadrant **110***b* from position B to position A may result in lowering of the robot arm **250**. Referring to FIG. **4**J, in some examples, the controller **400** calculates a distance from the gripper **270** to a surface/floor **17** and estimates a position of the gripper **270** if it is lowered towards the floor **17** from its current position. The teleoperation software **101** displays on the display **110** a gripper projection **116** of the gripper position on the floor and indicates a height of the gripper **270** from the floor **17**. Therefore, if the user **10** lowers the tongs **274***a*, **274***b* simultaneously by swiping his/her fingers towards the south from position B to position A in the first and second quadrants **110***a*, **110***b*, the robot **200** lowers its gripper **270** towards the gripper projection **116**.

In some examples, the user **10** drags the gripper projection **116** to a different location on the floor **17**. The gripper projection **116** is moveable on the OCU **100** by a finger touch or stylus drag and drop or mouse click and pointer drag and drop. The robot **200** then moves toward the gripper projection **116** and positions itself so that the gripper projection **116** is accurately positioned below the gripper **270**. The user **10** may pinch his/her fingers together in the first quadrant **110***a*, the second quadrant **110***b*, or both to manipulate the gripper **270** into grabbing an object **114**. The pinches may be oriented in any direction, for example, up and down, sideways, diagonal, etc. Additionally or alternatively, the user **10** may twist his/her fingers (e.g., thumb and forefinger) against the display **110** touch screen to adjust the position of the gripper **270** to better grab the object **114**. The height adjustment and twisting may be done simultaneously. Moreover, the user **10** may move two elements of the robot **200**, **300** simultaneously if their respective controls are in different quadrants **110***a-d*. The controller **400** may calculate a size of the object **114** to determine if the object **114** has a size that the gripper **270** is capable of holding. If the controller **400** determines that the object **114** is too large or too small to be grabbed, the controller **400** may issue a command to display a message on the OCU **100** informing the user **10** that the object **114** is too small or too large for the tongs **274***a*, **274***b* to grab.

Referring to FIG. **4**K, in some examples, the teleoperation software **101** displays drive lanes **118** on the display **110**. The drive lanes **118** provide the user **10** with a better view of the trajectory toward which the robot **200** is driving. In some examples, when the robot **200** is making a right or a left turn, additional turn lanes **119** are displayed indicating where the robot **200** is heading as it turns (as shown in FIG. **4**K, the robot **200** is making a right turn).

In some implementations, the user **10** swipes his/her finger within the bottom quadrants **110***c-d* from a south position to a north position indicating that the robot **200** drives in a forward path. As the robot **200** is driving, the user **10** may select a portion **132** of the robot representation **130** and maneuver the selectable portion **132** to move in a specific manner. The robot **200** may simultaneously receive the two user commands of driving and moving a portion of its body.

Referring to FIGS. **2**A, **2**B, and **4**J, in some examples, where the gripper **270** includes a camera **272**, the augmented image **121** includes a video feed from the gripper camera **272** displayed in a separate camera window **150**. The separate camera window **150** shows the video feedback as the gripper **270** is approaching the object **114**. The camera window **150** may display the projected target **116** in the video feed.

Referring to FIG. **4**L, in some implementations, the user **10** may indicate one or more waypoints **160** on the display **110**. The robot **200** follows the waypoints **160** in the order that the user **10** touched the display **110**. For each waypoint **160**, the controller **400** determines if the waypoint **160** is a valid waypoint **160**, which means that the waypoint **160** is positioned on a traversable surface. For example, a valid waypoint **160** is on a surface that is not a wall or a cliff. If the waypoint **160** is valid, then the controller **400** issues drive commands for the robot **200** to head towards the waypoint **160**. If the waypoint **160** is not a valid waypoint **160**, which means the waypoint **160** is on a wall or down a cliff, then the controller **400** may issue one of two commands: the first one allowing the robot **200** to drive to a location closest to the waypoint **160**; or the second one to skip that waypoint **160** and move to the next waypoint **160**. The OCU **100** may display the waypoints **160** on the video feed and, while sensors can improve the ability to identify valid waypoints **160**, the controller **400** is able to navigate to waypoints **160** that use no other sensor data other than a derived ground plane of the video feed, as calculated by the controller **400**.

In some examples, the display **110** includes a help button **170**. When the user **10** touches the help button **170**, the con-

troller **400** provides the user **10** with a step by step indication of how certain features may be executed. In some examples, a tutorial is available to help the user **10** learn how to maneuver and manipulate the robot representation **130** using the OCU **100**. The help button **170** provides the user **10** with different help options such as, but not limited to, more access to specific OCU functionality, or allowing a separate user **10** to view and remotely access functionality of the OCU **100**.

In some examples, the teleoperation software application **101** renders on the display **120** a setting button **172**. When the user **10** touches the settings button **172**, the user **10** has access to several settings that include, but are not limited to, selecting the robot **200**, selecting a user profile associated with the robot **200**, brightness controls, selecting the position of the robot representation **130**, selecting the position of the camera window **150**, selecting whether execution of the robot manipulation occurs upon removing finger off the display **110** or as the finger is moving on the display **110**.

Referring to FIGS. **5**A-**6**B, in some implementations, the teleoperation software application **101** displays a hybrid three-dimensional image map **180** (hybrid map) on the display **110** as part of the augmented image **121**. The hybrid map **180** may be a combination of the remote view **120** displayed on the display **110** and a layout map **182**, such as the 2-D, top-down map displayed in the map view **184**. In some examples, the layout map **182** is a map stored in memory on the controller **400**, the cloud **22**, or downloaded to the robot **200** via the network **20**.

FIG. **5**A illustrates a remote video feed view **120** that a user **10** may see when the robot **200** is positioned in a hallway. FIG. **5**B illustrates an augmented hybrid map **180** displayable on the display **110**, in which the layout map **182** is partially overlaid and modified to fit the remote view **120**, indicating the room numbers and/or room types of the areas in the field of view of the robot **200**. The user **10** may maneuver and manipulate the robot **200** based on the hybrid map **180**, which may also be a part of the augmented image **121**. This augmented view helps the user **10** to better navigate the robot **200** due to the accurate representation of dimension of the room that the hybrid map **180** provides because it represents both a perspective live remote video view **120** and a map **184**.

To provide the hybrid map **180**, the teleoperation software application **101** may determine a distortion between the remote view **120** and the layout map **182** using recorded robot map locations of a robot map **184** and corresponding layout map locations and then applying the determined distortion to fit the layout map **182** to the remote view **120**. In some implementations, determining the distortion includes determining a scaling size, origin mapping, and rotation between the layout map **182** and the remote view **120**, for example, by applying an affine transformation to the determined scaling size, origin mapping, and rotation.

Referring to FIGS. **1**, **4**A, and **6**A-**6**E, in some implementations, the OCU **100** provides a preview button **190** that causes the display of a rendered preview view **192***a* on the display **110**, a dedicated separate window, or some other window. While commanding the robot **200**, the user **10** may invoke a preview button **190**, which causes the robot **200** to stop moving physically, while the teleoperation software application **101** generates and displays a rendered preview view **192***a* providing a perspective view of a proposed robot action, such as a drive path, as if the robot **200** were continuing to move, e.g., along its drive path. This may be accomplished by using the map data, such as location of walls, and constructing a perspective "virtual reality" view based on the virtual location of the robot **200**. The user **10** may command the robot **200** by manipulating the robot representation **130** and/or other inputs (e.g., touch gestures) on the OCU **100** and then view a preview (e.g., a simulation) of what the robot **200** should do, if the command(s) is/are executed on the robot **200**.

In some implementations, the preview button **190** of the OCU **100** provides a rewind function. The rewind causes all robot motion prior to pressing the button **190** to be done in reverse. The reverse works either as a slider in time or for a duration of time proportional to the length of a button press event. For example, if the user **10** moved joints of the robot **200**, **300** and the chassis **210** in a certain sequence, the rewind button **190** provides the capability for those sequences to be done in reverse without the user **10** having to control each degree of freedom. For example, reaching an arm **250** in through a car window is a delicate process and is very difficult to get the arm **250** out, especially if there is no reverse camera view. The rewind capability allows the user **10** to not need the reverse camera view to get the arm **250** safely out the window.

In some examples, the telepresence software application **101** uses the layout map **182**, the robot map, and/or stored image data to construct the preview view **192***a*. For robot systems using a cloud computing service **22**, the telepresence software application **101** and optionally the robot **200** may communicate with the cloud computing service **22**, which may construct the preview view **192***a* based on stored image data, the 3-D map, and/or the 2.5 height map and then provide the preview view **192***a* for rendering in the display **110**. This implementation, allows the telepresence software application **101** to leverage the scalable computer processing and data storage capability of the cloud service **22** (e.g., the cloud service **22** can elastically scale up to process the data and then scale down afterwards), thus reducing the processing and memory requirement for a computing device executing the telepresence software application **101**.

FIG. **6**A illustrates an exemplary remote view **120** captured by the robot cameras **218**, **219**, **262**, **362**. FIG. **6**B illustrates a complimentary map **184** that may be displayed on the display **110** when the user **10** selects a map button **191**. The map **184** provides the current location of the robot **200** as denoted by a robot icon **16** along with a camera field of view **322** for a robot camera **218**, **219**, **262**, **362**. In some implementations, a camera window **150** continues to display the remote view **120** from the robot camera **218**, **219**, **262**, **362** in a picture-in-picture window, for example, placed in a corner of the OCU display **110**.

FIGS. **6**D and **6**F provide exemplary maps **184** displayed on the display **110** when the user **10** selects the map button **191** (FIG. **4**N). While executing the preview command, the telepresence software application **101** may render the robot icon **16** at the robot's current location along with the robot's camera field of view **322**. In addition or alternatively, the telepresence software application **101** may render in the map **184** a virtual robot icon **16***a* moving along a preview path along with a projected preview camera field of view **322***a*.

In some implementations, as the user **10** drives the robot **200** along a corridor, the user **10** may invoke the preview mode by selecting the preview button **190** on the display **110**. For example, at a location 50 feet away from a turn in the corridor, the user **10** may invoke the preview button **190**, causing the generation of a preview view **192***a* and stopping further movement of the robot **200** along the corridor. The user **10** may continue, however, to virtually move the robot **200** in a preview mode. The OCU display **110** may display the preview view **192***a* (e.g., a 3-D model) of the same corridor at the same position. As the user **10** drives forward in the preview mode, continues 50 feet, turns left, and continues driving, the user **10** can see the location of rooms and other

Tesla Exhibit 1009.037

corridors along the way in the 3-D model/preview view **192***a*. In some examples, for the first 30 feet of "virtual" driving, the telepresence software application **101** displays a blend of the actual view (from the stationary physical robot, further magnified and perspective-warped to match the virtual location) and the 3-D model/preview view **192***a*.

Referring to FIG. **7**A, in some implementations, a communication system **700** allows for communication between one or more users **10***a*-**10***n* and one or more robots **200***a*-**200***n*. The communication system **700** includes the network **20** and multiple robots **200***a*-**200***n* wirelessly communicating with the network **20** via one or more communication nodes **702**, **704**, **706**. The communication node **702**, **704**, **706** is a networking device that forwards data packets between computer networks. When the communication node **702**, **704**, **706** receives a data packet, it determines the ultimate destination (OCU **100**) of the data packets. The communication nodes **702**, **704**, **706** communicate with one or more other communication devices **702**, **704**, **706**, **720** via the network **20**.

The one or more users **10***a*-**10***n* may simultaneously communicate with the one or more robots **200**-**200***n*. As shown in FIG. **7**A, a first user **10***a* may communicate with first and second robots **200***a*, **200***n*. The first user **10***a* may use a first OCU **100***a* to teleoperate the first and second robots **200***a*, **200***n* from a distance. As previously described, the robots **200***a*, **200***b* may not be within the field of view of the user **10***a*, therefore, the OCU **100** is capable of communicating over the network **20**. In some examples, the second user **10***b* may take control of the first robot **200***a* from the first user **10***a* (e.g., based on a user priority policy implemented by the OCUs **100***a*-**100***n*). The second user **10***b* uses his/her OCU **100***b* to teleoperate the first robot **200***a* from a distance. Control of the first robot **200***a* may be based on a hierarchy of users **10** having priority permission to control the first robot **200***a*. For example, the first user **10***a* may be the main user **10***a* of the first robot and the second user **10***b* may be the main user of the second robot **200***n*. In some examples, if the first user **10***a* is controlling the second robot **200***b*, and the second user **10***b* decides to control the second robot **200***b*, the second user **10***b* may take control of the second robot **200***b*, since the second user **10***b* is the main user **10***b* of the second robot **200***b*. However, if the second user **10***b* was not the main user **10***b* of the second robot **200***b*, then the second user **10***b* may not be able to take control of the second robot **200***b*. Additionally or alternatively, the OCUs **100***a*-**100***n* can implement other user control policies as well, such as a user priority based on a rank within an organization.

In some implementations, a third user **10***c* having a third OCU **100***c* can use the third OCU **100***c* to observe actions or other users **10** or two observe robots **100**. For example, the third user **10***c* may select, via the display **110** of his/her OCU **100***c*, to view the screen **110** of the first user **10***a*, who may be controlling two robots **200***a*, **200***b*. In another example, if the first user **10***a* is controlling the first robot **200***a*, and the third user **10***c* selects (using the third OCU **100***c*) the first robot **200***a*, then the display **110** of the third OCU **100***c* of the third user **10***c* may mirror the display **110** of the of the first user **10***a*, but not necessary allow operation of the first robot **200***a*.

In some implementations, a user **10** teleoperating one or more robots **200** speaks a different language than people having contact with the robot **200**. The user **10** may want to deliver a message from the user **10** to the people. Therefore, the OCU **100** may include a microphone **108** (FIG. **7**A) configured to convert sound from the user **10** into electrical or digital signal that is transmitted to the cloud resource **22** for translation. The cloud resource **22** may send the translated audio to the robot **200** associated with the user **10**, i.e., being controlled by the user **10**, and/or to other OCUs **100**. Therefore, the teleopration software application **101** is configured to convert a user's speech into text in a first language, then translate the first language to a second language, and finally convert the text of the second language to speech, allowing the robot **200** to play the translated speech to people around the robot **200** and/or to other OCUs **100**. In some examples, the user **10** types a message via the OCU **100** and the teleoperation software application **101** translates the inputted text via the cloud **22** before allowing the robot **200** to play a recording of the translated text or display the translated text on a display of the robot **200**.

In some implementations, if a remote operator **10** wants to drive the robot **200** into a culvert, behind an object, or into a room or underground, the signal may be severely attenuated. Referring to FIG. **7**B, in some implementations, a robot system **710** includes an operator control unit (OCU) **100** in communication with a mobile robot **200**. The operator control unit **100** allows a remote operator **10** to partially or fully operate the robot **200** within a threshold communication range. In some implementations, one or more repeaters **720** extend the communication range between the OCU **100** and the robot **200**. In some examples, as shown in FIG. **7**C, a repeater **720** can be positioned adjacent the opening **32** of a culvert **30**, allowing continued communication between the OCU **100** and the robot **200** while its driving in the culvert **30**. The repeater **720** can therefore extend a communication network between the OCU **100** and the robot **200**, allowing relatively longer range missions and missions into signal attenuating situations (e.g., into tunnels **30** and buildings and around signal attenuating structures). As indicated in FIG. **7**C, a first line of sight **1** from the OCU **100** to the repeater **720** may not be parallel to or collinear with a line of sight **2** from the OCU **100** to the mobile robot **200**. In some implementations, no line of sight exists between the OCU **100** and the mobile robot **200**. The mobile robot **200** may be in communication with the OCU **100** via the repeater **720** positioned therebetween and having a direct first line of sight **1** to the OCU **100** and a direct second line of sight **2** to the mobile robot **200**.

In some implementations, when the robot **200** maneuvers into a tunnel **30** (e.g., a culvert, a cave, etc.), behind an obstacle, or into a building, the communication signal between the OCU **100** and the robot **200** may become attenuated, disrupting the communication therebetween. One or more repeaters **720** may be deployed to increase an effective communication range between the OCU **100** and the robot **200**. The repeater **720** can be an electronic device that receives a signal and retransmits it at a higher level or higher power, or onto the other side of an obstruction, so that the signal can cover longer distances. The repeater **720** may receive and transmit analog and/or digital signals. Each repeater **720** acts as a transceiver by receiving signals from the OCU **100** and transmitting the signals to the robot **200** and vice versa. Moreover, the repeater **720** may receive and transmit signals from other repeaters increasing a communication network **70** between the OCU **100** and the robot **200**. For example, signals between the OCU **100** and the robot **200** may be received and retransmitted by multiple repeaters **720** (in parallel and/or in series).

When the robot **200** enters a tunnel **30**, if the repeater **720** is deployed at the entrance to the tunnel **30**, as shown in FIG. **7**C, it may maintain direct line-of-sight contact with both the robot **200** and the OCU **100**. As a result, the robot **200** may drive relatively further into the tunnel **30** before communication is lost. In implementations in which the repeater **720** is a mobile robot **200**, the repeater **720** may move around to

improve connectivity range down the tunnel **30**. Additionally or alternatively, one or more repeaters **720** may be positioned in a breadcrumb trail down the tunnel **30** to further extend connectivity to the robot **200**.

In a similar way, the repeater **720** may improve the robot's performance in the investigation of buildings. Deployment of a repeater **720** in a doorway can increase a communications signal in the building. The repeater **720** may also improve the robot's performance over open ground. Assuming the repeater **720** has the same signal power as the OCU **100**, deploying the repeater **720** at the edge of OCU **100** communication may effectively double a mission range of the robot **200**.

In some implementations, the repeater **720** is a payload of the mobile robot **200**. The robot **200** can carry the repeater **720** to a threshold distance D_T or communication range between the OCU **100** and the robot **200**, and then deploy the repeater **720** to increase that communication range. Additionally or alternatively, the robot **200** can carry one or more repeaters **720** and drop them as the robot **200** moves into a tunnel **30**, a building, or behind an obstacle. The repeater **720** may be a mobile situation awareness robot **720***a* or a stationary communicator **720***b*. In the case of a mobile repeater robot **720***a*, after deployment, the repeater robot **720***a* may maneuver autonomously or semi-autonomously (e.g., by a remote operator) to a location between the OCU **100** and the robot **200** that provides adequate communication therebetween and optionally additional situational awareness (e.g., sensor data, video, and/or other imagery using its sensor system).

In example shown in FIG. **7**B, first and second repeater robots **720**a_1, **720**a_2 deployed by the user or operator **10** or the robot **200** provide a relatively increased and/or redundant communication network **70** between the OCU **100** and the robot **200**. If the first repeater robot **720**a_1 cannot repeat a transmission signal between the OCU **100** and the robot **200** (e.g., due to obstacles or obstructions) then the second repeater robot **720**a_2, if within range, can repeat the transmission signal between the OCU **100** and the robot **200**. Moreover, both repeater robots **720**a_1, **720**a_2 can repeat the transmission signal between the OCU **100** and the robot **200**, such that the OCU **100** and the robot **200** use the strongest signal and/or check for transmission errors.

In implementations in which the repeater **720** is a mobile robot **200** and more than one robot **200** are deployed in a location, each mobile robot **200** captures images of its surroundings and uploads the images to the cloud **22**. The teleoperation software application **101** retrieves images from multiple robots **200** and stores the images in the cloud storage **24**. The teleoperation software application **101** may analyze the images and send the analyzed data to each robot **200**. The analyzed data includes an overall geography of the location generated from the images retrieved from the multiple robots **200**. Therefore, each robot **200** senses its surroundings and the surroundings of other robots **200**.

FIGS. **8**A-**8**C illustrate an example OCU **100** for controlling one or more robots **200**. The OCU **100** includes a touchscreen display **110**. As shown, the OCU **100** is a touch screen tablet. The teleoperation software application **101** executing on the processor **102** of the OCU **100** provides a user interface **800**, **800***a-c* that the processor **102** renders on the display **110** of the OCU **100** to allow a user **10** to control the robot **200** from a distance. The user interface **800** may include a clockwise/counter clockwise icon **802** that allows the user **10** to select how the gripper **270** rotates. In the example shown, the clockwise/counter clockwise icon **802** is a slider control, but other controls are possible as well, such as dials and levels. If the user **10** wants to rotate the gripper **270** in a clockwise direction, the user **10** may slide the slider **802** to the clockwise position. Similarly, if the user **10** wants to rotate the gripper **270** in a counterclockwise position, then the user **10** may slide the slider **802** to the counterclockwise position. A gripper feedback icon **803** provides visual feedback of the gripper position when the gripper **270** is rotating or rotated. As shown, the tongs **274***a*, **274***b* of the gripper **270** are in a vertical orientation with respect to the ground.

The user interface **800** may include an open/close gripper slider **804** that allows the user **10** to adjust a pinch distance between the tongs **274***a*, **274***b* of the gripper **270** to grip or release an object. A clearance icon **805** on the user interface **800** indicates the clearance distance or provides a quantitative value of how close the tongues **274***a*, **274***b* are together (e.g., a pinch separation distance). In some examples, the clearance icon **805** indicates a pressure being applied by the tongs **274***a*, **274***b*, when the tongs **274***a*, **274***b* are pinching each other or an object therebetween. The clearance icon **805** may turn different colors indicating a relative level or pressure or display a pressure or force value applied by the tongs **274***a*, **274***b*.

A current view icon **808** of the user interface **800** indicates a current camera view **810**, **810***a* displayed on the display **110**. The user interface **800** may include other camera views **810**, **810***b-d*, from the same or from more than one robot **200**. A user **10** may toggle between the multiple camera views **810**, **810***a-d*, allowing the user **10** to control the one or more robots **200** from one OCU **100**.

The user interface **800** may include a mode selection, such as but not limited to, a drive sub-menu **812**, a manipulate sub-menu **814**, and an inspect sub-menu **816**. The user interface **800***a* of FIG. **8**A shows the manipulate sub-menu **814**, which includes control joints menu **818** allowing the user **10** to control one or more aspects of the joints of the robot joint **257**. A camera selection dial **820** allows the user **10** to select which camera **218**, **219**, **262**, **362** of the robot **200** to feed imagery for display in one or more camera views **810**, **810***a-d* on the display **110**. A speed controller **822** allows the user **10** to manipulate the speed of the arm **250** and/or the gripper **270**. For example, the user **10** may increase or decrease the speed at which the gripper **270** grips an object. In some examples, the user **10** may select an option to camera-follow the gripper **824**, where the OCU **100** and/or the robot **200** determines how to move the selected camera **218**, **219**, **262**, **362** (or another camera) to follow and maintain a view of the gripper **270**.

The user interface **800** also includes a view selection that includes a three-dimensional model view **826**, a map view **828**, and a tools view **830**. FIG. **8**A shows the map view **828**, which includes a retrotraverse icon **832**, allowing the robot **200** to traverse back from a location in a manner similar to the path it traversed to reach the location, when the robot **200** loses signal from the OCU **100**. In addition, the map view **828** includes a current location icon **834**, which allows the user **10** to view his/her current location, a waypoint icon **836** that allows the user **10** to place waypoints on the map view **828** and create a path for the robot **200** to traverse, and an expand button **838** that allows the user **10** to expand the map view **828** for better viewing.

In some examples, the user interface **800** includes a robot number indicator **840** indicating the number of other robots **200** connected to the network **20**. The user **10** may select one of the identified other robots **200** to initiate control of that robot **200**. The user interface **800** includes an identification number or a serial number **842** of the robot **200** currently connected to and being controlled by the OCU **100**. In addition, the user interface **800** displays a signal strength status **844** of the connection of the current connected robot **110** to the OCU **100** and other communication nodes **720** or other

robots **200**. The signal strength status **844** also displays the other communication nodes **720** or other robots **200** in a communication relay order, if applicable. For example, if the OCU **100** identifies three other network assets on the network **20** that each relay communications from one to another in series, then the signal strength status **844** may display the order of that communication series. Additionally, the user interface **800** may display a battery indicator **846** indicating the battery life of the OCU **100**, a volume controller **850** indicating the volume controls of the OCU **100**, and a settings icon **852** that allows the user **10** to view other settings and personalize the display **110**.

Referring to FIG. **8**B, in some implementations, the user **10** selects the drive sub-menu **812** on the user interface **800***b*, which includes a flipper control menu **854** for controlling the flipper. The drive sub-menu **812** allows the user **10** to adjust the camera settings **856** and zoom in/out using a sliding bar **858**. Moreover, the drive sub-menu **812** allows the user **10** to control the speed of the flippers **270**, i.e., the robot **200** by using the speed buttons **860**. The user **10** may rotate the camera **272** by pressing the rotate button **862**. The three-dimensional view **826** shows a three-dimensional view of the robot **200**. Referring to FIG. **8**C, in some examples, if the robot **200** tilts and falls on its side, the user **10** may invoke a self-righting behavior by pressing the self-right icon **864** on the user interface **800***c*.

Referring to FIGS. **8**A and **8**C, in some implementations, the user interface **800** displays an augmented image **121** overlain on the video feed **120** in one or more of the camera views **810**. The augmented image **121** includes a robot representation **130** overlain on the video feed view **120**. The robot representation **130** includes user-selectable portions **132** (e.g., a pivot end representation **132***a*, a first arm portion representation **132***b*, a joint representation **132***c*, a second arm portion representation **132***d*, a gripper representation **132***e*, a robot body representation **132***f*, and a flipper **132***g*) (see FIGS. **4**B-**4**I). In the example shown in FIG. **8**C, the teleoperation software **101** displays drive lanes **118** on the current camera view **810***a* of the user interface **800** (or another view). The drive lanes **118** provide the user **10** with a better view of the drive trajectory of the robot **200**. In addition, the user interface **800** may include a touch indicator **866** that provides visual feedback of the user **10** contacting the touch screen **110** and a touch movement indicator **868** showing the commanded touch movement of the user **10** relative to the initial touch, as received by the touch screen **110** (e.g., illustrating a swipe command) This visual feedback allows the user **10** to discern a general heading of the robot **200**.

Referring to FIGS. **9** and **10**, to achieve reliable and robust autonomous movement, the sensor system **500** may include several different types of sensors, which can be used in conjunction with one another to create a perception of the robot's environment sufficient to allow the robot **200** to make intelligent decisions about actions to take in that environment. The sensor system **500** may include one or more types of sensors supported by the robot body **210**, which may include obstacle detection obstacle avoidance (ODOA) sensors, communication sensors, navigation sensors, etc. For example, these sensors may include, but are not limited to, proximity sensors, contact sensors, three-dimensional (3D) imaging/depth map sensors, a camera (e.g., visible light, infrared camera and/or stereo camera), sonar, radar, LIDAR (Light Detection And Ranging, which can entail optical remote sensing that measures properties of scattered light to find range and/or other information of a distant target), LADAR (Laser Detection and Ranging), etc.

The sensor system **500** may include an inertial measurement unit (IMU) **504** in communication with the controller **400** to measure and monitor a moment of inertia of the robot **200** with respect to the overall center of gravity CG_R of the robot **200**. The controller **400** may monitor any deviation in feedback from the IMU **504** from a threshold signal corresponding to normal unencumbered operation. When accelerating from a stop, the controller **400** may take into account a moment of inertia of the robot **200** from its overall center of gravity CG_R to prevent robot tipping. The controller **400** may use a model of its pose, including its current moment of inertia. When payloads are supported, the controller **400** may measure a load impact on the overall center of gravity CG_R and monitor movement of the robot moment of inertia. If this is not possible, the controller **400** may apply a test torque command to the drive system **215** and measure actual linear and angular acceleration of the robot using the IMU **504**, in order to experimentally determine limits.

The sensor system **500** may include a magnetometer **506** in communication with the controller **400** to measure the strength and direction of magnetic fields. The magnetometer **506** may be used as a compass. The magnetometer **506** may be a scalar magnetometer **506**, which measures the total strength of the magnetic field that the robot **200** is subjected to, or vector magnetometers, which measures the component of the magnetic field in a particular direction, relative to the spatial orientation of the device.

In some examples, the sensor system **500** includes an accelerometer **508** in communication with the controller **400** to measure the proper acceleration of the robot **200**. Proper acceleration is the physical acceleration that an object experiences and not necessarily the change of velocity (i.e., coordinate acceleration). The controller **400** may consider sensory data from one or more of the IMU **504**, the magnetometer **506**, or accelerometer **508**.

In some implementations, the sensor system **500** includes an array of proximity sensors, one or more cameras **218**, **219**, **262** (e.g., stereo cameras, visible light camera, infrared camera, thermography, etc.), and/or one or more 3-D imaging sensors (e.g., volumetric point cloud imaging device) in communication with the controller **400** and arranged in one or more zones or portions of the robot **200** for detecting any nearby or intruding obstacles. The proximity sensors may be converging infrared (IR) emitter-sensor elements, sonar sensors, and/or ultrasonic sensors that provide a signal to the controller **400** when an object **114** is within a given range of the robot **200**. If any of the sensors has a limited field of view, the controller **400** or the sensor system **500** can actuate the sensor in a side-to-side scanning manner to create a relatively wider field of view to perform robust ODOA.

In some implementations, reasoning or control software, executable on a processor (e.g., of the robot controller **400**), uses a combination of algorithms executed using various data types generated by the sensor system **500**. The reasoning software processes the data collected from the sensor system **500** and outputs data for making navigational decisions on where the robot **200** can move without colliding with an obstacle, for example. By accumulating imaging data over time of the robot's surroundings, the reasoning software can in turn apply effective methods to selected segments of the sensed image(s) to improve simultaneous localization and mapping (SLAM).

The reliability of executing robot collision free moves may be based on: (i) a confidence level built by high level reasoning over time; and (ii) a depth-perceptive sensor that accumulates three major types of data for analysis—(a) a depth image, (b) an active illumination image and (c) an ambient

illumination image. Algorithms cognizant of the different types of data can be executed on each of the images obtained by the depth-perceptive imaging sensor. The aggregate data may improve the confidence level as compared to a system using only one of the kinds of data.

Referring to FIG. **10**, in some implementations, the controller **400** (e.g., a device having one or more computing processors in communication with memory capable of storing instructions executable on the computing processor(s)) executes a control system **410**, which includes a behavior system **410***a* and a control arbitration system **410***b* in communication with each other. The control arbitration system **410***b* allows robot applications **440** to be dynamically added and removed from the control system **410**, and facilitates allowing applications **440** to each control the robot **200** without needing to know about any other applications **440**. In other words, the control arbitration system **410***b* provides a simple prioritized control mechanism between applications **440** and resources **460** of the robot **200**.

The applications **440** can be stored in memory of or communicated to the robot **200**, to run concurrently on (e.g., on a processor) and simultaneously control the robot **200**. The applications **440** may access behaviors **420** of the behavior system **410***a*. The independently deployed applications **440** are combined dynamically at runtime and to share robot resources **460** (e.g., drive system **215**, arm(s) **250**, head(s) **260** and/or gripper(s) **270**) of the robot **200**. A low-level policy is implemented for dynamically sharing the robot resources **460** among the applications **440** at run-time. The policy determines which application **440** has control of the robot resources **460** as required by that application **440** (e.g. a priority hierarchy among the applications **440**). Applications **440** can start and stop dynamically and run completely independently of each other. The control system **410** also allows for complex behaviors **420** that can be combined together to assist each other. In some implementations, the OCU **100** displays a behavior option providing the user **10** the ability to select a behavior **420** that the controller **400** may implement.

The control arbitration system **410***b* includes one or more application(s) **440** in communication with a control arbiter **450**. The control arbitration system **410***b* may include components that provide an interface to the control arbitration system **410***b* for the applications **440**. Such components may abstract and encapsulate away the complexities of authentication, distributed resource control arbiters, command buffering, coordinate the prioritization of the applications **440** and the like. The control arbiter **450** receives commands from every application **440** and generates a single command based on the applications' priorities and publishes it for its associated resources **460**. The control arbiter **450** receives state feedback from its associated resources **460** and may send it back up to the applications **440**. The robot resources **460** may be a network of functional modules (e.g., actuators, drive systems, and groups thereof) with one or more hardware controllers. The commands of the control arbiter **450** are specific to the resource **460** to carry out specific actions.

A dynamics model **430** executable on the controller **400** is configured to compute the center for gravity (CG), moments of inertia, and cross products of inertial of various portions of the robot **200** for assessing a current robot state. With reference to the exemplary robot **200** shown in FIGS. **2**A and **2**B, the dynamics model **430** may be configured to calculate the center of gravity CG_M of the main body **210**, the center of gravity CG_F of each flipper **230**, the center of gravity CG_A of each arm **250**, the center of gravity CG_H of each head **260**, and/or the center of gravity CG_R of the entire robot **200**. The dynamics model **430** may also model the shapes, weight, and/or moments of inertia of these components. In some examples, the dynamics model **430** communicates with the IMU **504** or portions of one (e.g., accelerometers and/or gyros) in communication with the controller **400** for calculating the various centers of gravity of the robot **200**. The dynamics model **430** can be used by the controller **400**, along with other programs or behaviors **420** to determine operating envelopes of the robot **200** and its components.

In some implementations, a behavior **420** is a plug-in component that provides a hierarchical, state-full evaluation function that couples sensory feedback from multiple sources, such as the sensor system **500**, with a-priori limits and information into evaluation feedback on the allowable actions of the robot **200**. Since the behaviors **420** are pluggable into the application **440** (e.g., residing inside or outside of the application **440**), they can be removed and added without having to modify the application **440** or any other part of the control system **410**. Each behavior **420** is a standalone policy. To make behaviors **420** more powerful, it is possible to attach the output of multiple behaviors **420** together into the input of another so that you can have complex combination functions. The behaviors **420** are intended to implement manageable portions of the total cognizance of the robot **200**.

In the example shown, the behavior system **410***a* includes an obstacle detection/obstacle avoidance (ODOA) behavior **420***a* for determining responsive robot actions based on obstacles perceived by the sensor (e.g., turn away; turn around; stop before the obstacle, etc.). Another behavior **420** may include a loss communications behavior **420***b* for determining a drive path of the robot **200** during a loss of communication with a satellite for obtaining global positioning coordinates. The drive path can be determined using at least one of the inertial measurement unit **504**, odometry, and dead reckoning. For the exemplary robot **200** shown in FIGS. **2**A and **2**B, a self-right behavior **420***c* can provide actions for self-righting the robot **200** upon detecting a roll-over. Possible actions include rotating the flippers **130** a continuous 360 degrees to cause the main body to flip 180 degrees. For either robot **200** shown, a heading hold behavior **420***d* provides an assistant behavior that allows the robot **200** to correct the heading of the driven robot **200**. For example, if the robot **200** hits a rock, obstacle, or course variation while driving and veers off course, the heading hold behavior **420***d* can automatically correct the heading of the robot **200**, allowing the robot **200** to maintain a drive direction issued by the user **10**. The behavior system **410***a* may include one or more inspection behaviors. The inspection behavior(s) may influence execution of commands by the control arbitration system **410***b* based on sensor signals received from the sensor system **500** to identify and inspect electrical equipment, for example, or other hazardous items.

In some implementations, the behavior system **410***a* includes a reverse-out behavior **420***e* for determining a reverse path of the robot arm **250** and/or the arm effector **270** after the arm **250** and/or arm effector **270** attempted to reach an object **114**. For example, when a user **10** manipulates the robot **200** to grab an object **114** under a table, the user **10** may make such a selection by selecting the object **114** on the display **110** (e.g., by touching the object **114** twice), which indicates that the robot arm **250** should reach to the object **114**. While the robot arm **200** moves toward the object, the controller **400** uses inverse kinematics equations to determine the joint configuration of the arm **250** to achieve the desired pose of the arm **250**, i.e., reaching and grabbing the object **114** from beneath the table. After the robot **200** retrieves the object **114**, the controller **400** executes the reverse-out behavior **410***e*, which retracts the robot arm **250** from the position of

grabbing the object **114** along the same three-dimensional path it moved to retrieve the object **114**. In some examples, the controller **400** receives an indication of a selection of the reverse-out behavior **420***e* and executed the reverse-out behavior **420***e*. The reverse-out behavior **420***e* determines at least one reverse-movement parameter of the at least one movable portion (see FIGS. **4**B-**4**I) of the robot **200** using inverse kinematics to move the at least one movable portion of the robot **200** in an opposite direction along a path moved according to the issued command, and commands the at least one movable portion of the robot **200** based on the at least one reverse-movement movement parameter.

The behavior system **410***a* may include a door opening behavior **420***f* for opening a door; allowing the robot **200** to navigate freely in a space having closed doors and allowing the robot **200** navigate a space behind a closed door. Therefore, the door opening behavior **420***f* instructs the robot **200** to manipulate its environment to allow the robot **200** to not be constrained to a closed floor/space **17** and gain access to new floor/spaces **17** by opening doors. When the controller **400** executes the door opening behavior **420***f*, the controller **400** determines a position of a door handle and a type of the door handle positioned on the door; and based on the type of door handle, the controller **400** executes the door opening behavior **420***f*, which manipulates the arm **250** and gripper **270** in such a way as to open the door. The door handle may be any mechanism to open/close a door, such as but not limited to, a door knob, a lever-style door handle, a commercial duty lever door handle, a flush pull handle (for sliding doors), or a push bar handle.

The behavior system **410***a* may include an auto-flipper behavior **420***g* that prevents the robot **200** from flipping due to movement of the arm **250**. For example, when the user **10** instructs the robot **200** to reach for an object, the controller **400** determines a predicted movement of the center-of-gravity CG_R of the robot **200** due to a movement of the arm **250** needed to reach and grasp the object. When the object is too far away, such that only moving the arm **250** would cause the center-of-gravity CG_R of the robot **200** to move beyond a stable volume of operating space, the auto-flipper behavior **420***g* causes the robot **200** to move the flippers **230***a*, **230***b* to a bracing position against a ground supporting surface, which increases the stable volume of operating space of the center-of-gravity CG_R of the robot **200** and allows the arm **250** to reach further and grasp the object with the gripper **270** while still maintaining a stable robot pose. In additional examples, the auto-flipper behavior **420***g* moves the flippers **230***a*, **230***b* to a stair ascending position or another position to achieve a mobility goal.

A grasp assistance behavior **420***h* may determine a size and shape of an object **114** and manipulate the gripper **270** to grip the object **114** in a manner necessary to retrieve and maintain a grasp of the object. The grasp assistance behavior **420***h* may use one more sensors of the robot **200** to assess the nature of the object.

The behavior system **410***a* may include an auto light behavior **420***i*, which determines if the robot **200** is located in a dark room (e.g., based on a light sensor reading) and turns on a light disposed on the robot when the robot **200** determines that it is in a dark area. In some examples, the controller **400** also determines when there is light surrounding the robot **200** and turns the robot light off.

The behavior system **410***a* may include a robot positioning behavior **420***j* that repositions the robot **200** with respect to an object. When the robot **200** is approaching an object from a first direction or in a first approach position, the robot positioning behavior **420***j* may, in response to a received desired approach direction or approach position, cause the controller **400** to issue a command to autonomously drive the robot to approach the object from the desired approach direction or approach position with respect to the object. This also allows the robot **200** to carefully observe the object from multiple angles. In some examples, the user **10** may select an angle at which he/she wants to view the robot **200** approach the object. The controller **400** uses its sensor system **500**, such as the IMU **504**, and odometry to determine the robot repositioning commands.

The behavior system **410***a* may include a stair climbing behavior **420***k* that causes or assists the robot **200** to climb stairs. The stair climbing behavior **420***k* automatically adjusts the center-of-gravity CG_R of the robot **200** to climb the stairs.

The behavior system **410***a* may include a find developer behavior **420**I. A find deployer behavior **420**I allows the repeater robot **500***a* to find its deployer, such as the operator **10** or the robot **200** that carried the repeater robot **500***a* as a payload. Execution of the find deployer behavior **420**I by the behavior system **410***a* may cause execution of commands that ascertain imagery (such as a 3D volumetric point cloud) and/or video of the surrounding environment using the imaging sensor **518**, identifying a deployer (e.g., using image recognition), and then orienting the repeater robot **500***a* to capture the deployer in a field of view of the imaging sensor **518**. The find deployer behavior **420**I may continue to reorient the repeater robot **720***a* to maintain the deployer in the field of view of the imaging sensor **518**.

The behavior system **410***a* may include am anti-tip behavior **420***m* that receives inertial measurement signals from the IMU **504** of the robot **200** and determines a location of a center of gravity CG_R of the robot **200**. When the location of the center of gravity CG_R of the robot **200** moves outside a stable volume of space, the anti-tip behavior **420***m* commands deployment of an appendage **230**, **250** of the robot **200** to alter the location of the center of gravity CG of the robot **200** or brace the robot **200** against a supporting surface to prevent tipping of the robot **200**.

The behavior system **410***a* may include a swarm behavior **420***n*, which allows the user **10** to set points on a map displayed on the OCU **100**, each point indicative of a location that the user **10** wants the one or more robots **200** to position a repeater **720** (which may be a robot **200**). The swarm behavior **420***n* assists the user **10** in setting up a communication network **20**, where all the robots **200** communicate with a repeater **720** or another robot **200** in a networked arrangement. The order of operations of setting up the communication network **20** can be based on the order of location input from the user **10**.

FIG. **11** provides an exemplary method **1100** of operating a robot **200**. The method **1100** includes electronically **1102** receiving images **120** captures by an imaging device (e.g., camera **218**, **219**, **262**, **272**) disposed on the robot **200**, or by an imaging device in the vicinity of the robot **200**. The method **1100** further includes augmenting **1104** the images by overlaying a representation of the robot **130** on the images **120**, where the robot representation **130** includes user-selectable portions **132**. The method **1100** further includes electronically displaying **1106** the augmented images **121** and electronically displaying **1108** an intent to command the selected user-selectable portion **132**, **134** of the robot representation **130** by modifying an appearance of the representation of the robot **200** (highlighting the user-selectable portions, e.g., see FIGS. **4**B-I). The method **1100** further includes receiving **1110** an input representation of a user interaction with at least

one user-selectable portion **132** and issuing **1112** a command (e.g., a drive command, a turn command, etc.) to the robot **200** based on the user interaction.

In some implementations, a representation of the robot **130** includes at least one of a representation **132***f* of a robot body **210**, a representation **132***e* of a gripper **270**, or a representation of a link **132***b,d* or an actuator **132***a,c*. The method **1100** may include receiving the input representative of the user interaction from a touch display **110**. The input includes at least one of a linear finger swipe, a curved finger swipe, a multi-finger swipe, a multi-finger gesture, a tap, or a prolonged press as shown with respect to FIGS. **4**A-**4**M.

In some implementations, the method **1100** includes receiving an input representative of the user interaction with at least one user-selectable portion **132** of the robot representation **130**. The method **1100** further includes receiving a first input representative of a selection of a displayed object **114** and receiving a second input representative of a selection of a robot behavior **420** that is associated with the object **114**. Additionally or alternatively, the robot behavior **420** includes navigating the robot **200** towards the object **114**. In some examples, the robot behavior **420** includes grasping the object **114** with a manipulator **250**, **270** of the robot **200**. The method **1100** may include receiving an indication of a selection of an alternate approach direction. In response to the indication, the robot behavior determines a drive path using odometry and/or inertial measurement signals from the IMU **504** of the robot **200** to navigate the robot **200** from a current location and a current approach direction to approach the object from the alternate approach direction, such as approaching the object from a different approach angle that an original approach. The method **1100** may further include identifying in the images a plane of a ground surface **17** supporting the robot **200** and a location of the object **114** with respect to the ground surface plane **17**.

In some examples, the method **1100** further includes receiving an indication of a selection of a reverse-out behavior **420***e* and executing the reverse-out behavior **420***e*. The reverse-out behavior **420***e* determines at least one reverse-movement parameter of the at least one movable portion of the robot **200** using inverse kinematics to move the at least one movable portion of the robot **200** in an opposite direction along a path moved according to the issued command, and commands the at least one movable portion of the robot **200** based on the at least one reverse-movement movement parameter.

The method **1100** may further include receiving an indication of a selection of an anti-tip behavior **420***m* and executing the anti-tip behavior **420***m*. The anti-tip behavior **420***m* receives inertial measurement signals from an IMU **504** of the robot **200** and determines a location of a center of gravity CG_R of the robot **200**. When the location of the center of gravity CG_R of the robot **200** moves outside a stable volume of space, the anti-tip behavior **420***m* commands deployment of an appendage **230** (e.g., a flipper **230** or arm **250**) of the robot **200** to alter the location of the center of gravity CG of the robot **200** or brace the robot **200** against a supporting surface **17** to prevent tipping of the robot **200**.

In some implementations, the method **1100** includes providing haptic feedback in response to the received input. The method **1100** may also include issuing a negative feedback response when the determined at least one movement parameter of the at least one movable portion of the robot **200** based on the received input violates a movement policy or is unexecutable. The negative feedback response includes at least one of the haptic feedback response, an audio feedback response, or a visual feedback response. The visual feedback response includes displaying an indicator at or near any portions of the robot **200** representation corresponding to any unmovable portions of the robot **200** based on the received input.

FIG. **12** provides an exemplary method **1200** of operating multiple robots **200**. The method **1200** includes identifying **1202** multiple robots **200** in communication with a network **20** and for each identified robot **200**, electronically displaying **1204** a robot **200** identity **842**, a wireless communication signal strength **844**, and a communication position within any series of robots **200** relaying communications to the network **20**. The method **1200** further includes establishing **1206** control of one or more of the robots **200**, and for each controlled robot **200**: electronically **1208** receiving images **120** from the controlled robot **200**; augmenting **1210** the images **120** by overlaying a representation of the corresponding robot **130** on the images **120**; and electronically displaying **1212** the augmented images **121**. The robot **200** representation includes user-selectable portions **132** corresponding to movable portions of the corresponding robot **200**.

In some implementations, for at least one controlled robot **200**, the method **1200** includes receiving an indication of a selection of at least one user-selectable portion **132** of the corresponding robot **200** representation of the at least one controlled robot **200**, electronically displaying an intent to command the selected at least one user-selectable portion **132** of the corresponding robot representation **130**, and receiving an input representative of a user interaction with at least one user-selectable portion **132**. For at least the one controlled robot, the method **1200** also includes determining at least one movement parameter of at least one movable portion of the corresponding robot **200** using inverse kinematics based on the received input and issuing a command to the corresponding robot **200** based on the at least one movement parameter. The representation of the at least one controlled robot **200** includes at least one of a representation **130** of a vehicle body, a representation of a gripper, a representation of a link, or a representation of an actuator. Electronically displaying the intent to command the selected at least one user-selectable robot representation portion **132** includes modifying an appearance of the robot representation **132**. In some examples, the input representative of the user interaction is received from a touch display **110** (e.g., of the OCU **100**) and includes at least one of a linear finger swipe, a curved finger swipe, a multi-finger swipe, a multi-finger gesture, a tap, or a prolonged press.

In some implementations, receiving the input representative of the user interaction with at least one user-selectable portion **132** includes receiving a first input representative of a selection of a displayed object and receiving a second input representative of a selection of a robot behavior **420**. The robot behavior **420** may be associated with the object. The robot behavior **420** may include navigating the at least one controlled robot towards the object. The method **1200** also includes receiving an indication of a selection of an alternate approach direction. The robot behavior **420**, **420***j* determines a drive path using odometry and/or inertial measurement signals from the IMU **504** of the robot **200** to navigate the at least one controlled robot **200** from a current location and a current approach direction to approach the object from the alternate approach direction. The robot behavior **420**, **420***j* may include grasping the object with a manipulator of the robot **200**. In some examples, the method **1200** includes identifying in the images **120** a plane of a ground surface supporting the at least one controlled robot **200** and a location of the object with respect to the ground surface plane **17**.

In some implementations, the method **1200** further includes receiving an indication of a selection of a reverse-out behavior **420***e*, and executing the reverse-out behavior **420***e*. The reverse-out behavior **420***e* determines at least one reverse-movement parameter of the at least one movable portion of the robot using inverse kinematics to move the at least one movable portion of the at least one controlled robot **200** in an opposite direction along a path moved according to the issued command, and commands the at least one movable portion of the at least one controlled robot **200** based on the at least one reverse-movement movement parameter.

The method **1200** may include providing haptic feedback in response to the received input. In some examples, the method **1200** includes issuing a negative feedback response when the determined at least one movement parameter of the at least one movable portion of the robot **200** based on the received input violates a movement policy or is unexecutable. The negative feedback response includes at least one of the haptic feedback response, an audio feedback response, or a visual feedback response. The visual feedback response includes displaying an indicator at or near any portions **132** of the robot representation **130** corresponding to any unmovable portions of the robot **200** based on the received input.

In some implementations, the method **1200** further includes receiving an indication of a selection of a series of robots **200** in communication with the network **20** and an order of deployment of a communication repeater **720** deployment carried by each of the selected robots **200**, and issuing repeater deployment instructions to each of the selected robots **200**. Each repeater instruction indicates a repeater deployment order of the corresponding robot **200** with respect to the other selected robots **200**. Moreover, each selected robot **200** deploys its carried communication repeater **720** when the robot **200** maneuvers to or near an edge of a wireless communications reception area of the network **20**. Each repeater instruction may include a repeater deployment location. The method **1200** may further include communicating with and using a remote scalable computing resource **22** to execute commands demanding a threshold computing capacity.

Although various implementations may be discussed, the robot **200** and methods of operating the robot **200** may apply to any environment or building in need of environmental monitoring (e.g., air quality control). For example, the robot **200** may operate in any environment or building needing monitoring of environmental factors for compliance to a standard, for operational reasons or for satisfying a customer delivery. For heating ventilation and cooling (HVAC) installations, the robot **200** may be used to monitor and/or check the temperature, humidity, and/or air flow distribution in a building, for example, before hand-over to a customer. Hospitals may use the robot **200** to monitor and maintain environmental factors, such as air quality, for patient comfort and safety. The robot **200** may monitor clean rooms for measuring/mapping air flow and particulate levels, food storage rooms for measuring/mapping temperature and/or contamination, basements for measuring/mapping carbon monoxide and/or radon, nuclear power plants for measuring/mapping radiation levels, and other environments.

Various implementations of the systems and techniques described here can be realized in digital electronic circuitry, integrated circuitry, specially designed ASICs (application specific integrated circuits), computer hardware, firmware, software, and/or combinations thereof. These various implementations can include implementation in one or more computer programs that are executable and/or interpretable on a programmable system including at least one programmable processor, which may be special or general purpose, coupled to receive data and instructions from, and to transmit data and instructions to, a storage system, at least one input device, and at least one output device.

These computer programs (also known as programs, software, software applications or code) include machine instructions for a programmable processor, and can be implemented in a high-level procedural and/or object-oriented programming language, and/or in assembly/machine language. As used herein, the terms "machine-readable medium" and "computer-readable medium" refer to any computer program product, apparatus and/or device (e.g., magnetic discs, optical disks, memory, Programmable Logic Devices (PLDs)) used to provide machine instructions and/or data to a programmable processor, including a machine-readable medium that receives machine instructions as a machine-readable signal. The term "machine-readable signal" refers to any signal used to provide machine instructions and/or data to a programmable processor.

The processes and logic flows described in this specification can be performed by one or more programmable processors executing one or more computer programs to perform functions by operating on input data and generating output. The processes and logic flows can also be performed by, and apparatus can also be implemented as, special purpose logic circuitry, e.g., an FPGA (field programmable gate array) or an ASIC (application specific integrated circuit).

To provide for interaction with a user, one or more aspects of the disclosure can be implemented on a computer having a display device, e.g., a CRT (cathode ray tube), LCD (liquid crystal display) monitor, or touch screen for displaying information to the user and optionally a keyboard and a pointing device, e.g., a mouse or a trackball, by which the user can provide input to the computer. Other kinds of devices can be used to provide interaction with a user as well; for example, feedback provided to the user can be any form of sensory feedback, e.g., visual feedback, auditory feedback, or tactile feedback; and input from the user can be received in any form, including acoustic, speech, or tactile input. In addition, a computer can interact with a user by sending documents to and receiving documents from a device that is used by the user; for example, by sending web pages to a web browser on a user's client device in response to requests received from the web browser.

While this specification contains many specifics, these should not be construed as limitations on the scope of the disclosure or of what may be claimed, but rather as descriptions of features specific to particular implementations of the disclosure. Certain features that are described in this specification in the context of separate implementations can also be implemented in combination in a single implementation. Conversely, various features that are described in the context of a single implementation can also be implemented in multiple implementations separately or in any suitable sub-combination. Moreover, although features may be described above as acting in certain combinations and even initially claimed as such, one or more features from a claimed combination can in some cases be excised from the combination, and the claimed combination may be directed to a sub-combination or variation of a sub-combination.

Similarly, while operations are depicted in the drawings in a particular order, this should not be understood as requiring that such operations be performed in the particular order shown or in sequential order, or that all illustrated operations be performed, to achieve desirable results. In certain circumstances, multi-tasking and parallel processing may be advantageous. Moreover, the separation of various system compo-

nents in the embodiments described above should not be understood as requiring such separation in all embodiments, and it should be understood that the described program components and systems can generally be integrated together in a single software product or packaged into multiple software products.

A number of implementations have been described. Nevertheless, it will be understood that various modifications may be made without departing from the spirit and scope of the disclosure. Accordingly, other implementations are within the scope of the following claims. For example, the actions recited in the claims can be performed in a different order and still achieve desirable results.

What is claimed is:

1. A method of operating a robot, the method comprising:
electronically receiving images;
augmenting the images by overlaying a representation of the robot on the images, the robot representation comprising user-selectable portions corresponding to movable portions of the robot;
electronically displaying the augmented images;
receiving an indication of a selection of at least one user-selectable portion of the robot representation;
electronically displaying an intent to command the selected at least one user-selectable portion of the robot representation;
receiving an input representative of a user interaction with at least one user-selectable portion;
determining at least one movement parameter of at least one movable portion of the robot using inverse kinematics based on the received input; and
issuing a command to the robot based on the at least one movement parameter.

2. The method of claim **1**, wherein the received images are captured by an imaging device disposed on the robot.

3. The method of claim **1**, wherein the received images are captured by an imaging device located in a vicinity of the robot.

4. The method of claim **1**, wherein the representation of the robot comprises at least one of a representation of a vehicle body, a representation of a gripper, a representation of a link, or a representation of an actuator.

5. The method of claim **4**, wherein electronically displaying the intent to command the selected at least one user-selectable robot representation portion comprises modifying an appearance of the robot representation.

6. The method of claim **1**, wherein the input representative of the user interaction is received from a touch display and comprises at least one of a linear finger swipe, a curved finger swipe, a multi-finger swipe, a multi-finger gesture, a tap, or a prolonged press.

7. The method of claim **1**, wherein receiving the input representative of the user interaction with at least one user-selectable portion comprises:
receiving a first input representative of a selection of a displayed object; and
receiving a second input representative of a selection of a robot behavior, the robot behavior associated with the object.

8. The method of claim **7**, wherein the robot behavior comprises navigating the robot towards the object.

9. The method of claim **8**, further comprising receiving an indication of a selection of an alternate approach direction, the robot behavior determining a drive path using odometry and/or inertial measurement signals from an inertial measurement unit of the robot to navigate the robot from a current location and a current approach direction to approach the object from the alternate approach direction.

10. The method of claim **8**, wherein the robot behavior comprises grasping the object with a manipulator of the robot.

11. The method of claim **7**, further comprising identifying in the images a plane of a ground surface supporting the robot and a location of the object with respect to the ground surface plane.

12. The method of claim **1**, further comprising:
receiving an indication of a selection of a reverse-out behavior; and
executing the reverse-out behavior, the reverse-out behavior:
determining at least one reverse-movement parameter of the at least one movable portion of the robot using inverse kinematics to move the at least one movable portion of the robot in an opposite direction along a path moved according to the issued command; and
commanding the at least one movable portion of the robot based on the at least one reverse-movement movement parameter.

13. The method of claim **1**, further comprising:
receiving an indication of a selection of an anti-tip behavior; and
executing the anti-tip behavior, the anti-tip behavior:
receiving inertial measurement signals from an inertial measurement unit of the robot;
determining a location of a center of gravity of the robot; and
when the location of the center of gravity of the robot moves outside a stable volume of space, commanding deployment of an appendage of the robot to alter the location of the center of gravity of the robot or brace the robot against a supporting surface to prevent tipping of the robot.

14. The method of claim **1**, further comprising providing haptic feedback in response to the received input.

15. The method of claim **1**, further comprising, when the determined at least one movement parameter of the at least one movable portion of the robot based on the received input violates a movement policy or is unexecutable, issuing a negative feedback response.

16. The method of claim **15**, wherein the negative feedback response comprises at least one of a haptic feedback response, an audio feedback response, or a visual feedback response, the visual feedback response comprising displaying an indicator at or near any portions of the robot representation corresponding to any unmovable portions of the robot based on the received input.

17. An operator controller unit for controlling a robot, the operator controller unit comprising:
a screen; and
a processor in communication with the screen, the processor configured to:
electronically receive images;
augment the images by overlaying a representation of the robot on the images, the robot representation comprising user-selectable portions corresponding to movable portions of the robot;
electronically display the augmented images on the screen;
receive an indication from the screen of a selection of at least one user-selectable portion of the robot representation;
electronically display on the screen an intent to command the selected at least one user-selectable portion of the robot representation;

receive an input from the screen representative of a user interaction with at least one user-selectable portion;

determine at least one movement parameter of at least one movable portion of the robot using inverse kinematics based on the received input; and

issue a command to the robot based on the at least one movement parameter.

18. The operator controller unit of claim **17**, wherein the received images are captured by an imaging device disposed on the robot.

19. The operator controller unit of claim **17**, wherein the received images are captured by an imaging device located in a vicinity of the robot.

20. The operator controller unit of claim **17**, wherein the representation of the robot comprises at least one of a representation of a vehicle body, a representation of a gripper, a representation of a link, or a representation of an actuator.

21. The operator controller unit of claim **20**, wherein electronically displaying the intent to command the selected at least one user-selectable robot representation portion comprises modifying an appearance of the representation of the robot.

22. The operator controller unit of claim **17**, wherein the input representative of the user interaction is received from a touch display and comprises at least one of a linear finger swipe, a curved finger swipe, a multi-finger swipe, a multi-finger gesture, a tap, or a prolonged press.

23. The operator controller unit of claim **17**, wherein receiving the input representative of the user interaction with at least one user-selectable portion comprises:

receiving a first input representative of a selection of a displayed object; and

receiving a second input representative of a selection of a robot behavior, the robot behavior associated with the object.

24. The operator controller unit of claim **23**, wherein the robot behavior comprises navigating the robot towards the object.

25. The operator controller unit of claim **24**, wherein receiving the input representative of the user interaction further comprises receiving an indication of a selection of an alternate approach direction, the robot behavior determining a drive path using odometry and/or inertial measurement signals from an inertial measurement unit of the robot to navigate the robot from a current location and a current approach direction to approach the object from the alternate approach direction.

26. The operator controller unit of claim **25**, wherein the robot behavior comprises grasping the object with a manipulator of the robot.

27. The operator controller unit of claim **23**, wherein the processor executes a surface recognition routine that identifies in the images a plane of a ground surface supporting the robot and a location of the object with respect to the ground surface plane.

28. The operator controller unit of claim **17**, wherein the processor is configured to:

receive an indication of a selection of a reverse-out behavior; and

execute the reverse-out behavior, the reverse-out behavior:

determining at least one reverse-movement parameter of the at least one movable portion of the robot using inverse kinematics to move the at least one movable portion of the robot in an opposite direction along a path moved according to the issued command; and

commanding the at least one movable portion of the robot based on the at least one reverse-movement movement parameter.

29. The operator controller unit of claim **17**, wherein the processor is configured to:

receive an indication of a selection of an anti-tip behavior; and

execute the anti-tip behavior, the anti-tip behavior:

receiving inertial measurement signals from an inertial measurement unit of the robot;

determining a location of a center of gravity of the robot; and

when the location of the center of gravity of the robot moves outside a stable volume of space, commanding deployment of an appendage of the robot to alter the location of the center of gravity of the robot or brace the robot against a supporting surface to prevent tipping of the robot.

30. The operator controller unit of claim **17**, further comprising a vibration device, the processor configured to command the vibration device to provide haptic feedback in response to the received input.

31. The operator controller unit of claim **17**, wherein the processor is configured to, when the determined at least one movement parameter of the at least one movable portion of the robot based on the received input violates a movement policy or is unexecutable, issue a negative feedback response.

32. The method of claim **31**, wherein the negative feedback response comprises at least one of a haptic feedback response, an audio feedback response, or a visual feedback response, the visual feedback response comprising displaying on the screen an indicator at or near any portions of the robot representation corresponding to any unmovable portions of the robot based on the received input.

* * * * *