US010452974B1

(12) **United States Patent**
Cosic

(10) **Patent No.: US 10,452,974 B1**
(45) **Date of Patent: Oct. 22, 2019**

(54) **ARTIFICIALLY INTELLIGENT SYSTEMS, DEVICES, AND METHODS FOR LEARNING AND/OR USING A DEVICE'S CIRCUMSTANCES FOR AUTONOMOUS DEVICE OPERATION**

(71) Applicant: **Jasmin Cosic**, Miami, FL (US)

(72) Inventor: **Jasmin Cosic**, Miami, FL (US)

(*) Notice: Subject to any disclaimer, the term of this patent is extended or adjusted under 35 U.S.C. 154(b) by 525 days.

(21) Appl. No.: **15/340,991**

(22) Filed: **Nov. 2, 2016**

(51) **Int. Cl.**
G06N 3/08 (2006.01)
G06N 5/02 (2006.01)

(52) **U.S. Cl.**
CPC ***G06N 3/08*** (2013.01); ***G06N 5/022*** (2013.01)

(58) **Field of Classification Search**
CPC G06N 3/08; G06N 5/022
See application file for complete search history.

(56) **References Cited**

U.S. PATENT DOCUMENTS

4,370,707 A 1/1983 Phillips et al.
4,730,315 A 3/1988 Saito et al.
4,860,203 A 8/1989 Corrigan et al.
5,560,011 A 9/1996 Uyama
5,602,982 A 2/1997 Judd et al.
6,026,234 A 2/2000 Hanson et al.
6,088,731 A 7/2000 Kiraly et al.
6,106,299 A 8/2000 Ackermann et al.
6,126,330 A 10/2000 Knight
6,314,558 B1 11/2001 Angel et al.
6,408,262 B1 * 6/2002 Leerberg G06F 11/3608 703/2
6,643,842 B2 11/2003 Angel et al.
6,728,689 B1 4/2004 Drissi et al.
6,735,632 B1 5/2004 Kiraly et al.
6,754,631 B1 6/2004 Din
6,801,912 B2 10/2004 Moskowitz et al.
6,842,877 B2 1/2005 Robarts et al.
6,915,105 B2 7/2005 Masuda
6,973,446 B2 12/2005 Mamitsuka et al.
7,017,153 B2 3/2006 Gouriou et al.
7,052,277 B2 5/2006 Kellman
7,113,946 B2 9/2006 Cosic
7,117,225 B2 10/2006 Cosic
7,222,127 B1 5/2007 Bem et al.
7,240,335 B2 7/2007 Angel et al.
7,249,349 B2 7/2007 Hundt et al.
7,424,705 B2 9/2008 Lewis et al.
7,478,371 B1 1/2009 Gove
7,484,205 B2 1/2009 Venkatapathy
7,565,340 B2 7/2009 Herlocker et al.
7,721,218 B2 5/2010 Awe et al.
(Continued)

OTHER PUBLICATIONS

Chen et al. Case-Based Reasoning System and Artificial Neural Networks: A Review Neural Comput & Applic (2001) 10: pp. 264-276, 13 pages.

(Continued)

Primary Examiner — Santiago Garcia

(57) **ABSTRACT**

Aspects of the disclosure generally relate to computing enabled devices and/or systems, and may be generally directed to devices, systems, methods, and/or applications for learning a device's operation in various circumstances, storing this knowledge in a knowledgebase (i.e. neural network, graph, sequences, etc.), and enabling autonomous operation of the device.

20 Claims, 40 Drawing Sheets

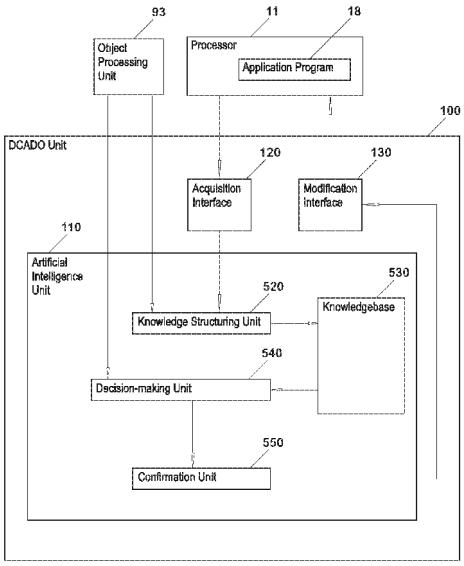

(56) **References Cited**

U.S. PATENT DOCUMENTS

7,765,537 B2 7/2010 Havin et al.
7,797,259 B2 9/2010 Jiang et al.
7,840,060 B2 11/2010 Podilchuk
7,925,984 B2 4/2011 Awe et al.
7,987,144 B1 7/2011 Drissi et al.
8,005,828 B2 8/2011 Buchner et al.
8,019,699 B2 9/2011 Baxter
8,078,556 B2 12/2011 Adi et al.
8,090,669 B2 1/2012 Shahani et al.
8,137,112 B2 3/2012 Woolf et al.
8,166,463 B2 4/2012 Gill et al.
8,195,674 B1 6/2012 Bem et al.
8,196,119 B2 6/2012 Gill et al.
8,244,730 B2 8/2012 Gupta
8,251,704 B2 8/2012 Woolf et al.
8,261,199 B2 9/2012 Cradick et al.
8,266,608 B2 9/2012 Hecht et al.
8,335,805 B2 12/2012 Cosic
8,364,612 B2 1/2013 Van Gael et al.
8,386,401 B2 2/2013 Virkar et al.
8,397,227 B2 3/2013 Fan et al.
8,417,740 B2 4/2013 Cosic
8,464,225 B2 6/2013 Greifeneder
8,549,359 B2 10/2013 Zheng
8,572,035 B2 10/2013 Cosic
8,589,414 B2 11/2013 Waite et al.
8,595,154 B2 * 11/2013 Breckenridge G06N 20/00 706/12
8,655,260 B2 2/2014 Yueh et al.
8,655,900 B2 2/2014 Cosic
8,667,472 B1 3/2014 Molinari
8,996,432 B1 3/2015 Fu
9,047,324 B2 6/2015 Cosic
9,268,454 B2 2/2016 Hamilton, II et al.
9,282,309 B1 * 3/2016 Cosic H04N 9/87
9,298,749 B2 3/2016 Cosic
9,305,216 B1 4/2016 Mishra
9,367,806 B1 * 6/2016 Cosic G06N 5/022
9,443,192 B1 * 9/2016 Cosic G06N 3/02
9,582,762 B1 * 2/2017 Cosic G06N 5/04
9,864,933 B1 * 1/2018 Cosic G06K 9/66
10,102,226 B1 * 10/2018 Cosic G06F 16/5866
10,102,449 B1 * 10/2018 Cosic G06K 9/00771
2003/0026588 A1 2/2003 Elder et al.
2003/0065662 A1 4/2003 Cosic
2004/0117771 A1 6/2004 Venkatapathy
2004/0194017 A1 9/2004 Cosic
2004/0249774 A1 12/2004 Caid et al.
2004/0267521 A1 12/2004 Cutler et al.
2005/0149517 A1 7/2005 Cosic
2005/0149542 A1 7/2005 Cosic
2005/0240412 A1 10/2005 Fujita
2005/0245303 A1 11/2005 Graepel et al.
2005/0289105 A1 12/2005 Cosic
2006/0047612 A1 3/2006 Stanley et al.
2006/0184410 A1 8/2006 Ramamurthy et al.
2006/0190930 A1 8/2006 Hecht et al.
2006/0265406 A1 11/2006 Chkodrov et al.
2007/0006159 A1 1/2007 Hecht et al.
2007/0050606 A1 3/2007 Ferren et al.
2007/0050719 A1 3/2007 Lui et al.
2007/0058856 A1 3/2007 Boregowda et al.
2007/0061735 A1 3/2007 Hoffberg et al.
2007/0106633 A1 5/2007 Reiner
2008/0144893 A1 6/2008 Guo et al.
2008/0215508 A1 9/2008 Hanneman et al.
2008/0254429 A1 10/2008 Woolf et al.
2008/0281764 A1 11/2008 Baxter
2008/0288259 A1 11/2008 Chambers et al.
2009/0044113 A1 2/2009 Jones et al.
2009/0067727 A1 3/2009 Hirohata
2009/0110061 A1 4/2009 Lee et al.
2009/0131152 A1 5/2009 Busse
2009/0136095 A1 5/2009 Marcon et al.
2009/0141969 A1 6/2009 Yu et al.
2009/0222388 A1 9/2009 Hua et al.
2009/0287643 A1 11/2009 Corville et al.
2009/0324010 A1 12/2009 Hou
2010/0023541 A1 1/2010 Cosic
2010/0033780 A1 2/2010 Gitter
2010/0063949 A1 3/2010 Eaton et al.
2010/0082536 A1 4/2010 Cosic
2010/0114746 A1 5/2010 Bobbitt et al.
2010/0138370 A1 6/2010 Wu et al.
2010/0241595 A1 9/2010 Felsher
2010/0278420 A1 * 11/2010 Shet G06K 9/00369 382/156
2011/0007079 A1 1/2011 Perez et al.
2011/0030031 A1 2/2011 Lussier et al.
2011/0085734 A1 4/2011 Berg et al.
2011/0218672 A1 9/2011 Maisonnier et al.
2011/0270794 A1 11/2011 Drory et al.
2012/0150773 A1 6/2012 DiCorpo et al.
2012/0167057 A1 * 6/2012 Schmich G06F 11/3644 717/130
2012/0284026 A1 11/2012 Cardillo et al.
2012/0290347 A1 * 11/2012 Elazouni G06Q 10/00 705/7.12
2013/0007532 A1 1/2013 Miller et al.
2013/0156345 A1 6/2013 Shmunk
2013/0159021 A1 6/2013 Felsher
2013/0218932 A1 8/2013 Cosic
2013/0226974 A1 8/2013 Cosic
2013/0238533 A1 9/2013 Virkar et al.
2013/0278501 A1 10/2013 Bulzacki
2013/0278631 A1 10/2013 Border et al.
2014/0052717 A1 2/2014 Franks et al.
2014/0075249 A1 3/2014 Sato et al.
2014/0161250 A1 6/2014 Leeds et al.
2014/0177946 A1 * 6/2014 Lim G06K 9/4614 382/156
2014/0207580 A1 7/2014 Minnis et al.
2014/0211988 A1 7/2014 Fan et al.
2015/0006171 A1 1/2015 Westby et al.
2015/0039304 A1 2/2015 Wein
2015/0055821 A1 2/2015 Fotland
2015/0264306 A1 9/2015 Marilly et al.
2015/0269415 A1 9/2015 Gelbman
2015/0310041 A1 10/2015 Kier et al.
2015/0324685 A1 11/2015 Bohn et al.
2015/0339213 A1 * 11/2015 Lee G06F 11/3664 717/125
2016/0077166 A1 * 3/2016 Morozov G01C 19/00 702/150
2016/0140999 A1 5/2016 Cosic
2016/0142650 A1 5/2016 Cosic
2016/0167226 A1 * 6/2016 Schnittman B25J 5/00 382/153
2016/0243701 A1 * 8/2016 Gildert G05B 19/42
2016/0246819 A1 8/2016 Cosic
2016/0246850 A1 8/2016 Cosic
2016/0246868 A1 8/2016 Cosic
2016/0274187 A1 * 9/2016 Menon G01R 31/31718
2016/0292185 A1 10/2016 Cosic
2016/0328480 A1 11/2016 Owens et al.
2017/0161958 A1 * 6/2017 Eilat G02B 27/017
2018/0101146 A1 * 4/2018 Hariharan G05B 13/0265
2018/0120813 A1 * 5/2018 Coffman G05B 19/4097

OTHER PUBLICATIONS

John J. Grefenstette, Connie Loggia Ramsey, Alan C. Schultz, Learning Sequential Decision Rules Using Simulation Models and Competition, 1990, Navy Center for Applied Research in Artificial Intelligence, Naval Research Laboratory, Washington, DC, 27 pages.
Alan C. Schultz, John J. Grefenstette, Using a Genetic Algorithm to Learn Behaviors for Autonomous Vehicles, 1992, Navy Center for Applied Research in Artificial Intelligence, Naval Research Laboratory, Washington, DC, 12 pages.
Koppula et al., "Anticipating human activities using object affordances for reactive robotic response", IEEE TRAMI 2016, published May 5, 2015, 16 pages.

(56) **References Cited**

OTHER PUBLICATIONS

Orme, "System design tips for entry level smartphones—part 3", found online at "https://community.arm.com/processors/b/blog/posts/system-design-tips-for-entry-level-smartphones-part-3", Oct. 21, 2013, 12 pages.
Nowostawski, Mariusz et al., "Dynamic Demes Parallel Genetic Algorithm", May 13, 1999, 6 pages.
Stack Overflow, How can I quantify difference between two images?, accessed Aug. 2, 2017 at https://stackoverflow.com/questions/189943/how-can-i-quantify-difference-belween-two-images, 8 pages.
Skolicki, Zbigniew et al., "The Influence of Migration Sizes and Intervals on Island Models", Jun. 29, 2005, 8 pages.
Vahid Lari, et al., "Decentralized dynamic resource management support for massively parallel processor arrays", Sep. 11, 2011, 8 pages.
Vahid Lari, et al., "Distributed resource reservation in massively parallel processor arrays", May 16, 2011, 4 pages.
Mohsen Hayati and Yazdan Shirvany, "Artificial Neural Network Approach for Short Term Load Forecasting for Illam Region", Jan. 2007, 5 pages.
Hasim Sak, Andrew Senior, and Francoise Beaufays, "Long Short-Term Memory Recurrent Neural Network Architectures for Large Scale Acoustic Modeling", Jan. 2014, 5 pages.
Jorg Walter and Klaus Schulten, "Implementation of self-organizing neural networks for visuo-motor control of an industrial robot", Jan. 1993, 10 pages.
Heikki Hyotyniemi and Aamo Lehtola, "A Universal Relation Database Interface for Knowledge Based Systems", Apr. 1991, 5 pages.
Mrissa, Michael, et al. "An avatar architecture for the web of things." IEEE Internet Computing 19.2 (2015): 30-38., 9 pages.
Luck, Michael, and Ruth Aylett. "Applying artificial intelligence to virtual reality: Intelligent virtual environments." Applied Artificial Intelligence 14.1 (2000): 3-32., 30 pages.
Terdjimi, Mehdi, et al. "An avatar-based adaptation workflow for the web of things." Enabling Technologies: Infrastructure for Collaborative Enterprises (WETICE), 2016 IEEE 25th International Conference on. IEEE, 2016., 6 pages.
Bogdanovych, Anton, et al. "Authentic interactive reenactment of cultural heritage with 3D virtual worlds and artificial intelligence." Applied Artificial Intelligence 24.6 (2010): 617-647., 32 pages.
Hernandez, Marco E. Perez, and Stephan Reiff-Marganiec. "Autonomous and self controlling smart objects for the future internet." Future Internet of things and cloud (FiCloud), 2015 3rd international conference on. IEEE, 2015., 8 pages.
Medini et al., "Building a Web of Things with Avatars", Managing the Web of Things (2017), 30 pages.
About | OpenCV, retrieved from <URL: http://opencv.org/about.html> on Dec. 13, 2014, 1 pages.
Animetrics, Inc. | 3D Facial Recognition, retrieved from <URL: http://animetrics.com/> on Dec. 13, 2014, 2 pages.
Bag-of-words model, retrieved from <URL: http://wikipedia.com> on Nov. 19, 2015, 2 pages.
Beier—Neely morphing algorithm, retrieved from <URL: http://wikipedia.com> on Nov. 19, 2015, 1 pages.
Computer vision, retrieved from <URL: http://wikipedia.com> on Nov. 19, 2015, 7 pages.
Convolutional neural network, retrieved from <URL: http://wikipedia.com> on Nov. 11, 2015, 5 pages.
Decimation (signal processing), retrieved from <URL: http://wikipedia.com> on Nov. 19, 2015, 3 pages.
Digital image processing, retrieved from <URL: http://wikipedia.com> on Nov. 19, 2015, 3 pages.
Dissolve (filmmaking), retrieved from <URL: http://wikipedia.com> on Nov. 11, 2015, 2 pages.
Facial recognition system, retrieved from <URL: http://wikipedia.com> on Nov. 11, 2015, 6 pages.
Feature detection (computer vision), retrieved from <URL: http://wikipedia.com> on Nov. 19, 2015, 3 pages.
Feature extraction, retrieved from <URL: http://wikipedia.com> on Nov. 19, 2015, 2 pages.
Gesture recognition, retrieved from <URL: http://wikipedia.com> on Nov. 19, 2015, 5 pages.
GrabCut, retrieved from <URL: http://wikipedia.com> on Nov. 1, 2015, 1 pages.
Image processing, retrieved from <URL: http://wikipedia.com> on Nov. 19, 2015, 2 pages.
Image segmentation, retrieved from <URL: http://wikipedia.com> on Nov. 19, 2015, 12 pages.
Image warping, retrieved from <URL: http://wikipedia.com> on Nov. 1, 2015, 2 pages.
Inbetweening, retrieved from <URL: http://wikipedia.com> on Nov. 11, 2015, 2 pages.
Interpolation, retrieved from <URL: http://wikipedia.com> on Nov. 1, 2015, 5 pages.
Language model, retrieved from <URL: http://wikipedia.com> on Nov. 19, 2015, 4 pages.
List of speech recognition software, retrieved from <URL: http://wikipedia.com> on Nov. 19, 2015, 4 pages.
Livewire Segmentation Technique, retrieved from <URL: http://wikipedia.com> on Nov. 1, 2015, 2 pages.
Morphing, retrieved from <URL: http://wikipedia.com> on Nov. 11, 2015, 2 pages.
Motion estimation, retrieved from <URL: http://wikipedia.com> on Nov. 19, 2015, 2 pages.
Muse: Face Morph || Mesh Warping, retrieved from <URL: http://alexwolfe.blogspot.com/2011/10/face-morph-mesh-warping.html> on Nov. 19, 2015, 2 pages.
N-gram, retrieved from <URL: http://wikipedia.com> on Nov. 1, 2015, 5 pages.
Optical flow, retrieved from <URL: http://wikipedia.com> on Nov. 1, 2015, 4 pages.
Outline of object recognition, retrieved from <URL: http://wikipedia.com> on Nov. 19, 2015, 7 pages.
Phonotactics, retrieved from <URL: http://wikipedia.com> on Nov. 19, 2015, 3 pages.
Recurrent neural network, retrieved from <URL: http://wikipedia.com> on Nov. 11, 2015, 5 pages.
Sample rate conversion, retrieved from <URL: http://wikipedia.com> on Nov. 1, 2015, 2 pages.
Simple interactive object extraction, retrieved from <URL: http://wikipedia.com> on Nov. 19, 2015, 2 pages.
Speech recognition, retrieved from <URL: http://wikipedia.com> on Nov. 11, 2015, 12 pages.
Speech segmentation, retrieved from <URL: http://wikipedia.com> on Nov. 1, 2015, 4 pages.
Welcome to recognize-speech.com, retrieved from <URL: http://recognize-speech.com/> on Oct. 18, 2015, 1 pages.
Introduction Speech, retrieved from <URL: http://recognize-speech.com/speech> on Oct. 18, 2015, 1 pages.
Preprocessing, retrieved from <URL: http://recognize-speech.com/preprocessing> on Oct. 18, 2015, 4 pages.
Feature Extraction, retrieved from <URL: http://recognize-speech.com/feature-extraction> on Oct. 18, 2015, 3 pages.
Acoustic model, retrieved from <URL: http://recognize-speech.com/acoustic-model> on Oct. 18, 2015, 2 pages.
Video content analysis, retrieved from <URL: http://wikipedia.com> on Nov. 19, 2015, 2 pages.
Video tracking, retrieved from <URL: http://wikipedia.com> on Nov. 1, 2015, 2 pages.
Andrej Karpathy, Thomas Leung, George Toderici, Rahul Sukthankar, Sanketh Shetty, Li Fei-Fei, Large-scale Video Classification with Convolutional Neural Networks, Apr. 14, 2014, 8 pages, Stanford University.
Karen Simonyan, Andrew Zisserman, Two-Stream Convolutional Networks for Action Recognition in Videos, Nov. 13, 2014, 11 pages, University of Oxford.
About Event Tracing, retrieved from <URL: http://msdn.microsoft.com/en-us/library/aa363668(d=default,l=en-us, v=vs.85).aspx> on Jan. 12, 2014, 2 pages.

(56) **References Cited**

OTHER PUBLICATIONS

Add dynamic Java code to your application, retrieved from <URL: http://www.javaworld.com/article/2071777/design-patterns/add-dynamic-java-code-to-your-application.html> on May 13, 2014, 6 pages.
BCEL, retrieved from <URL: http://commons.apache.org> on May 13, 2014, 2 pages.
Artificial intelligence, retrieved from <URL: http://wikipedia.com> on May 21, 2014, 28 pages.
Artificial neural network, retrieved from <URL: http://wikipedia.com> on May 21, 2014, 12 pages.
Branch (computer science), retrieved from <URL: http://wikipedia.com> on May 6, 2014, 2 pages.
Branch trace, retrieved from <URL: http://wikipedia.com> on May 28, 2014, 2 pages.
C Function Call Conventions and the Stack, retrieved from <URL: http://www.csee.umbc.edu/~chang/cs313.s02/stack.shtml> on Jan. 11, 2014, 4 pages.
Call stack, retrieved from <URL: http://wikipedia.com> on Jan. 11, 2014, 5 pages.
Program compilation and execution flow, retrieved from <URL: http://cs.stackexchange.com/questions/6187/program-compilation-and-execution-flow> on Jan. 9, 2014, 2 pages.
Control unit, retrieved from <URL: http://wikipedia.com> on May 25, 2014, 2 pages.
Create dynamic applications with javax.tools, retrieved from <URL: http://www.ibm.com/developerworks/library/j-jcomp/> on May 13, 2014, 11 pages.
Creating a Debugging and Profiling Agent with JVMTI, retrieved from <URL: http://www.oracle.com/technetwork/articles/java/jvmti-136367.html> on Jan. 11, 2014, 18 pages.
Decision tree learning, retrieved from <URL: http://wikipedia.com> on Jun. 24, 2014, 5 pages.
Dynamic Bytecode Instrumentation, retrieved from <URL: http://www.drdobbs.com/tools/dynamic-bytecode-instrumentation/184406433> on Apr. 26, 2014, 6 pages.
Dynamic programming language, retrieved from <URL: http://wikipedia.com> on May 7, 2014, 4 pages.
Dynamic recompilation, retrieved from <URL: http://wikipedia.com> on May 19, 2014, 4 pages.
Eval(), retrieved from <URL: https://developer.mozilla.org/en-US/docs/Web/JavaScript/Reference/Global_Objects/eval> on May 7, 2014, 13 pages.
Function, retrieved from <URL: https://developer.mozilla.org/en-US/docs/Web/JavaScript/Reference/Global_Objects/Function> on May 7, 2014, 11 pages.
FunctionEnter2 Function, retrieved from <URL: https://msdn.microsoft.com/en-us/library/aa964981(d=default,I=en-us, v=vs.110).aspx> on Mar. 19, 2014, 2 pages.
FunctionLeave2 Function, retrieved from <URL: https://msdn.microsoft.com/en-us/library/aa964942(d=default,I=en-us, v=vs.110).aspx> on Mar. 19, 2014, 1 pages.
Heuristic, retrieved from <URL: http://wikipedia.com> on May 22, 2014, 5 pages.
How to: Configure Trace Switches, retrieved from <URL: https://msdn.microsoft.com/en-us/library/vstudio/t06xyy08(d=default,I=en-us,v=vs.100).aspx> on Mar. 19, 2014, 3 pages.
Indirect branch, retrieved from <URL: http://wikipedia.com> on May 5, 2014, 1 pages.
Instruction cycle, retrieved from <URL: http://wikipedia.com> on Apr. 30, 2014, 2 pages.
Instruction set, retrieved from <URL: http://wikipedia.com> on Apr. 29, 2014, 6 pages.
Interrupt, retrieved from <URL: http://wikipedia.com> on May 15, 2014, 5 pages.
Introduction to Instrumentation and Tracing, retrieved from <URL: http://msdn.microsoft.com/en-us/library/aa983649(d=default,I=en-us,v=vs.71).aspx> on Jan. 10, 2014, 2 pages.
Java bytecode, retrieved from <URL: http://wikipedia.com> on May 27, 2014, 4 pages.
Package java.util.logging, retrieved from <URL: http://docs.oracle.com/javase/1.5.0/docs/api/java/util/logging/package-summary.html> on Mar. 19, 2014, 2 pages.
Javac—Java programming language compiler, retrieved from <URL: http://docs.oracle.com/javase/7/docs/technotes/tools/windows/javac.html> on May 13, 2014, 12 pages.
Interface JavaCompiler, retrieved from <URL: http://wikipedia.com> on May 13, 2014, 4 pages.
Javassist, retrieved from <URL: http://wikipedia.com> on May 13, 2014, 2 pages.
Just-in-time compilation, retrieved from <URL: http://wikipedia.com> on May 19, 2014, 5 pages.
JVM Tool Interface, retrieved from <URL: http://docs.oracle.com/javase/7/docs/plafform/jvmti/jvmti.html> on Apr. 26, 2014, 127 pages.
Machine code, retrieved from <URL: http://wikipedia.com> on Apr. 30, 2014, 3 pages.
Metaprogramming, retrieved from <URL: http://wikipedia.com> on May 8, 2014, 3 pages.
Microsoft.VisualBasic.Logging Namespace, retrieved from <URL: http://msdn.microsoft.com/en-us/library/ms128122(d=default,I=en-us,v=vs.110).aspx> on Jan. 13, 2014, 1 pages.
Pin (computer program), retrieved from <URL: http://wikipedia.com> on May 6, 2014, 3 pages.
Processor register, retrieved from <URL: http://wikipedia.com> on Apr. 29, 2014, 4 pages.
Profiling (computer programming), retrieved from <URL: http://wikipedia.com> on Jan. 10, 2014, 4 pages.
Profiling Overview, retrieved from <URL: http://msdn.microsoft.com/en-us/library/bb384493(d=default,I=en-us, v=vs.110).aspx> on Jan. 12, 2014, 6 pages.
Program counter, retrieved from <URL: http://wikipedia.com> on Apr. 24, 2014, 2 pages.
Ptrace, retrieved from <URL: http://wikipedia.com> on Apr. 24, 2014, 2 pages.
Reflection (computer programming), retrieved from <URL: http://wikipedia.com> on May 7, 2014, 5 pages.
Class Runtime, retrieved from <URL: http://docs.oracle.com/javase/7/docs/api/java/lang/Runtime.html> on Jan. 10, 2014, 10 pages.
Self-modifying code, retrieved from <URL: http://wikipedia.com> on Jan. 12, 2014, 6 pages.
Subjective logic, retrieved from <URL: http://wikipedia.com> on May 22, 2014, 5 pages.
System.CodeDom.Compiler Namespace, retrieved from <URL: http://msdn.microsoft.com/en-us/library/z6b99ydt(d=default,I=en-us,v=vs.110).aspx> on May 13, 2014, 2 pages.
System.Reflection.Emit Namespace, retrieved from <URL: http://msdn.microsoft.com/en-us/library/xd5fw18y(d=default =en-us,v=vs.110).aspx> on May 13, 2014, 2 pages.
Tracing (software), retrieved from <URL: http://wikipedia.com> on Jan. 10, 2014, 3 pages.
Tree (data structure), retrieved from <URL: http://wikipedia.com> on Jun. 24, 2014, 6 pages.
PTRACE(2), retrieved from <URL: http://unixhelp.ed.ac.uk/CGI/man-cgi?ptrace> on Mar. 19, 2014, 5 pages.
Wevtutil, retrieved from <URL: http://technet.microsoft.com/en-us/library/cc732848(d=default,I=en-us,v=ws.11).aspx> on Apr. 28, 2014, 5 pages.
Intel Processor Trace, retrieved from <URL: https://software.intel.com/en-us/blogs/2013/09/18/processor-tracing> on Apr. 28, 2014, 3 pages.
Younghoon Jung, Java Dynamics Reflection and a lot more, Oct. 10, 2012, 55 pages, Columbia University.
Amitabh Srivastava, Alan Eustace, Atom A System for Building Customized Program Analysis Tools, May 3, 2004, 12 pages.
Mathew Smithson, Kapil Anand, Aparna Kotha, Khaled Elwazeer, Nathan Giles, Rajeev Barua, Binary Rewriting without Relocation Information, Nov. 10, 2010, 11 pages, University of Maryland.
Marek Olszewski, Keir Mierte, Adam Czajkowski, Angela Demle Brown, JIT Instrumentation—A Novel Approach to Dynamically

(56) **References Cited**

OTHER PUBLICATIONS

Instrument Operating Systems, Feb. 12, 2007, 14 pages, University of Toronto.

* cited by examiner

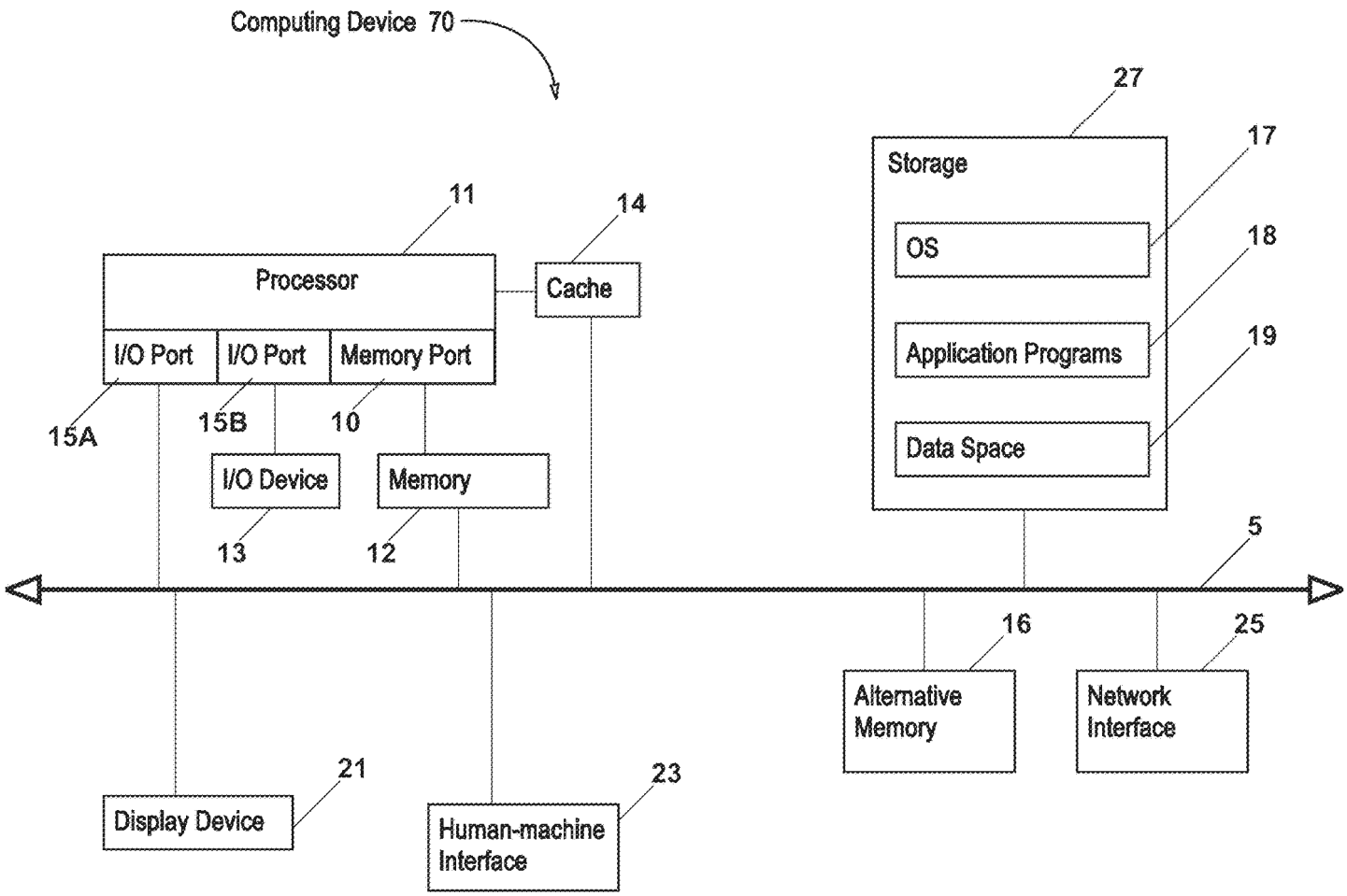
Computing Device 70
27
Storage
17
OS
18
Application Programs
19
Data Space
11
Processor
14
Cache
I/O Port
I/O Port
Memory Port
15A
15B
10
I/O Device
Memory
13
12
5
16
Alternative Memory
25
Network Interface
21
Display Device
23
Human-machine Interface

FIG. 1

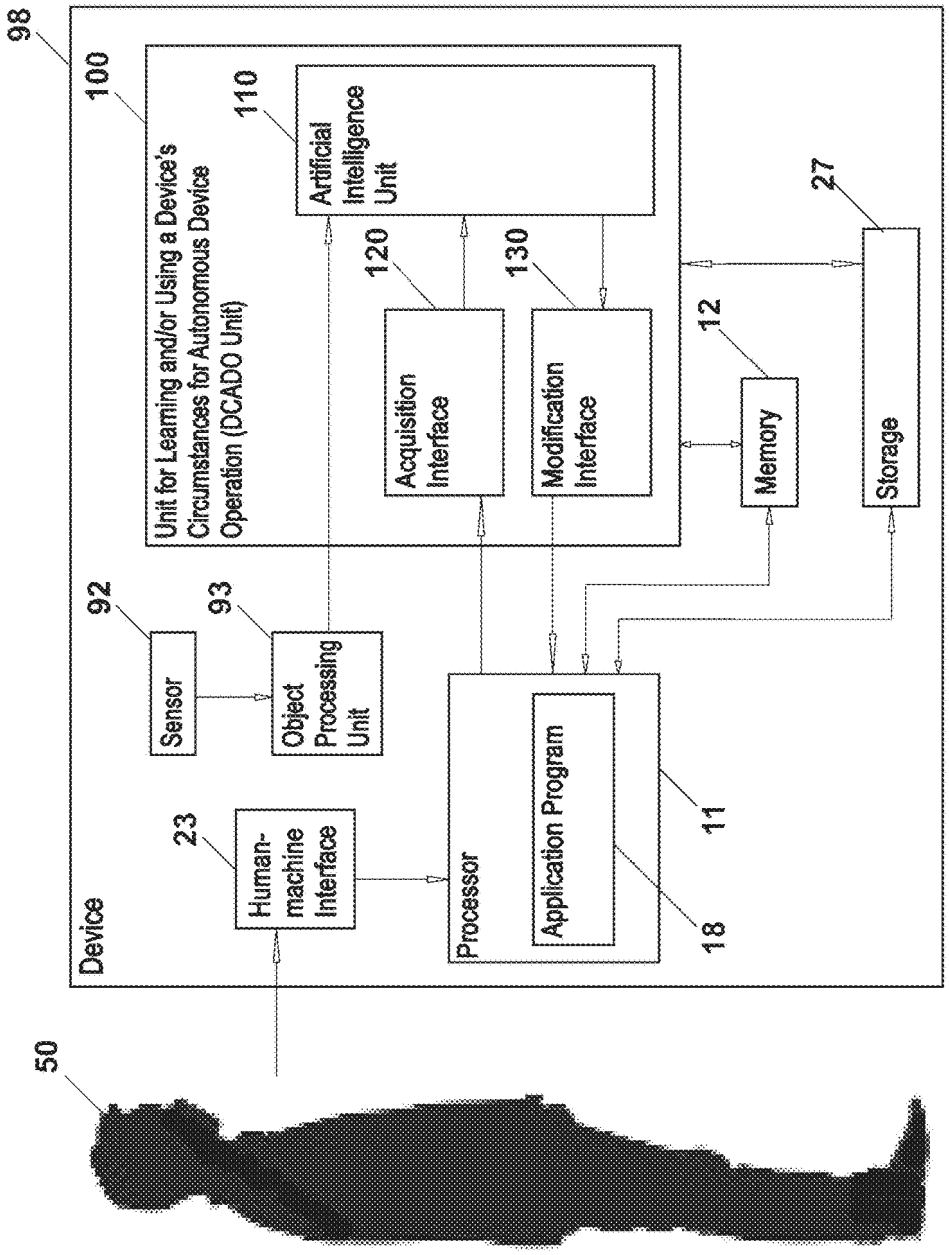
98
Device
100
Unit for Learning and/or Using a Device's Circumstances for Autonomous Device Operation (DCADO Unit)
110
Artificial Intelligence Unit
120
Acquisition Interface
130
Modification Interface
92
Sensor
93
Object Processing Unit
23
Human-machine Interface
Processor
Application Program
18
11
12
Memory
27
Storage
50

FIG. 2

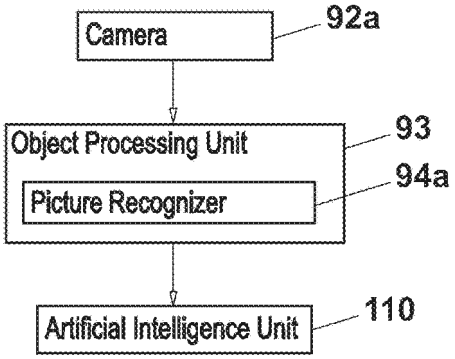

FIG. 3A

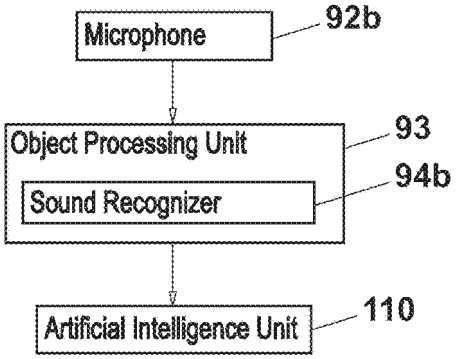

FIG. 3B

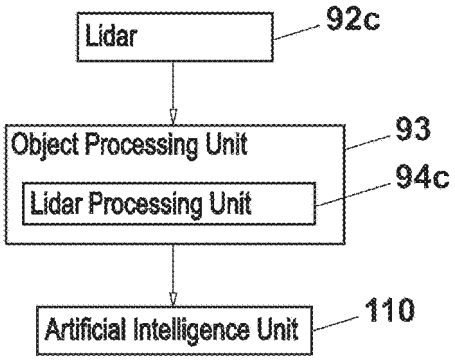

FIG. 3C

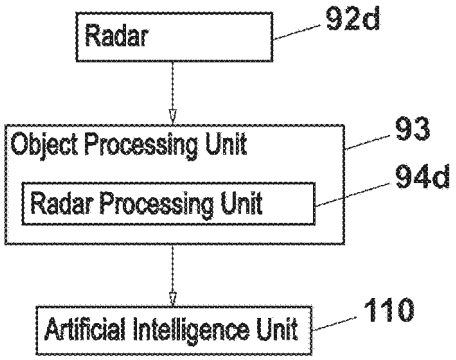

FIG. 3D

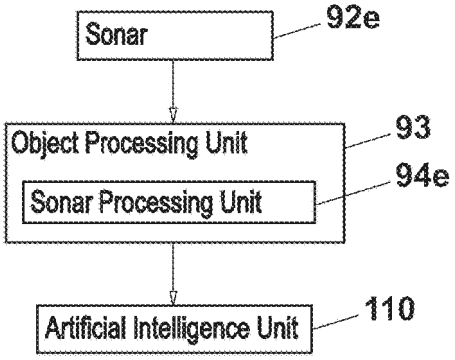

FIG. 3E

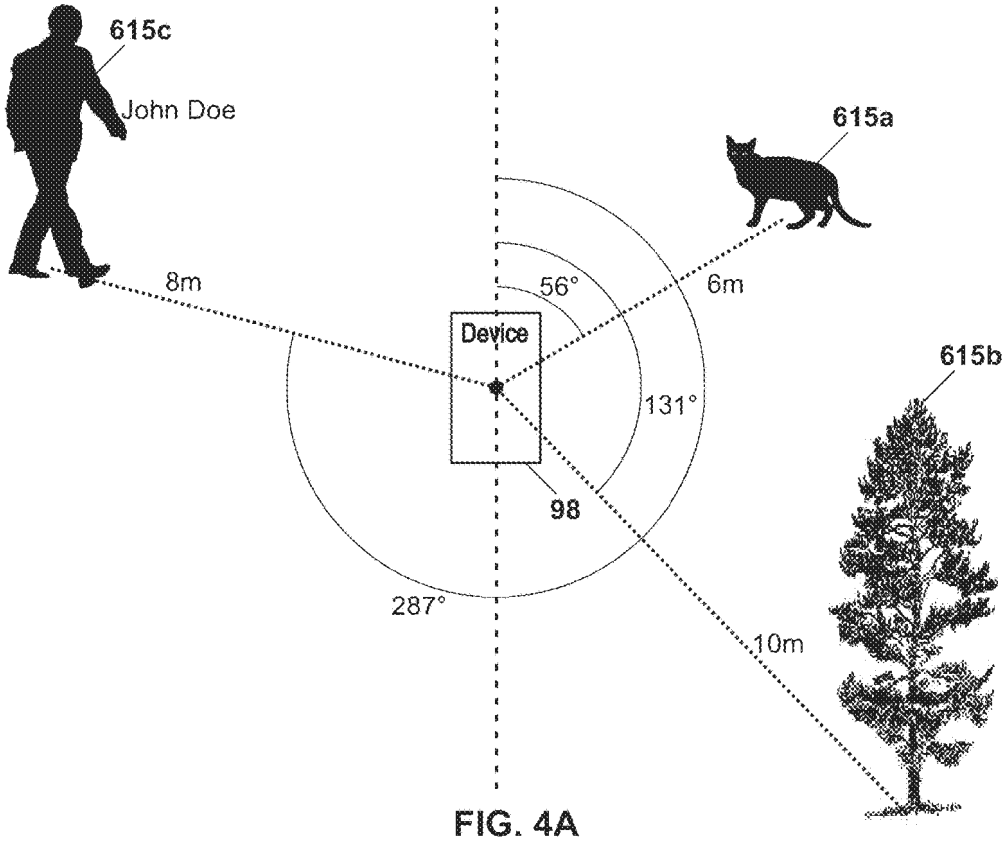
615c
John Doe
615a
8m
56°
6m
Device
615b
131°
98
287°
10m

FIG. 4A

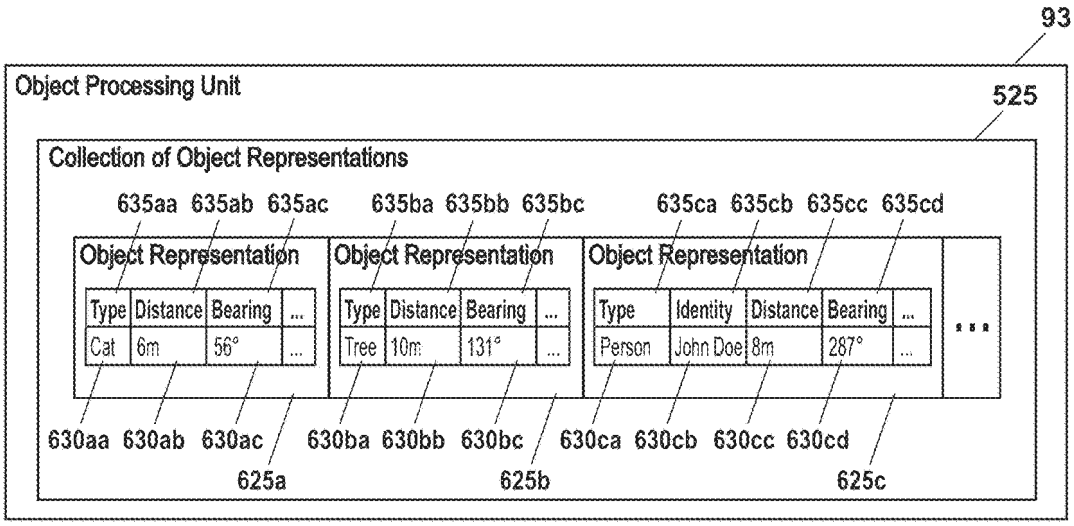
93
Object Processing Unit
525
Collection of Object Representations
635aa 635ab 635ac
635ba 635bb 635bc
635ca 635cb 635cc 635cd
Object Representation
Type Distance Bearing ...
Cat 6m 56° ...
Object Representation
Type Distance Bearing ...
Tree 10m 131° ...
Object Representation
Type Identity Distance Bearing ...
Person John Doe 8m 287° ...
630aa 630ab 630ac
630ba 630bb 630bc
630ca 630cb 630cc 630cd
625a
625b
625c

FIG. 4B

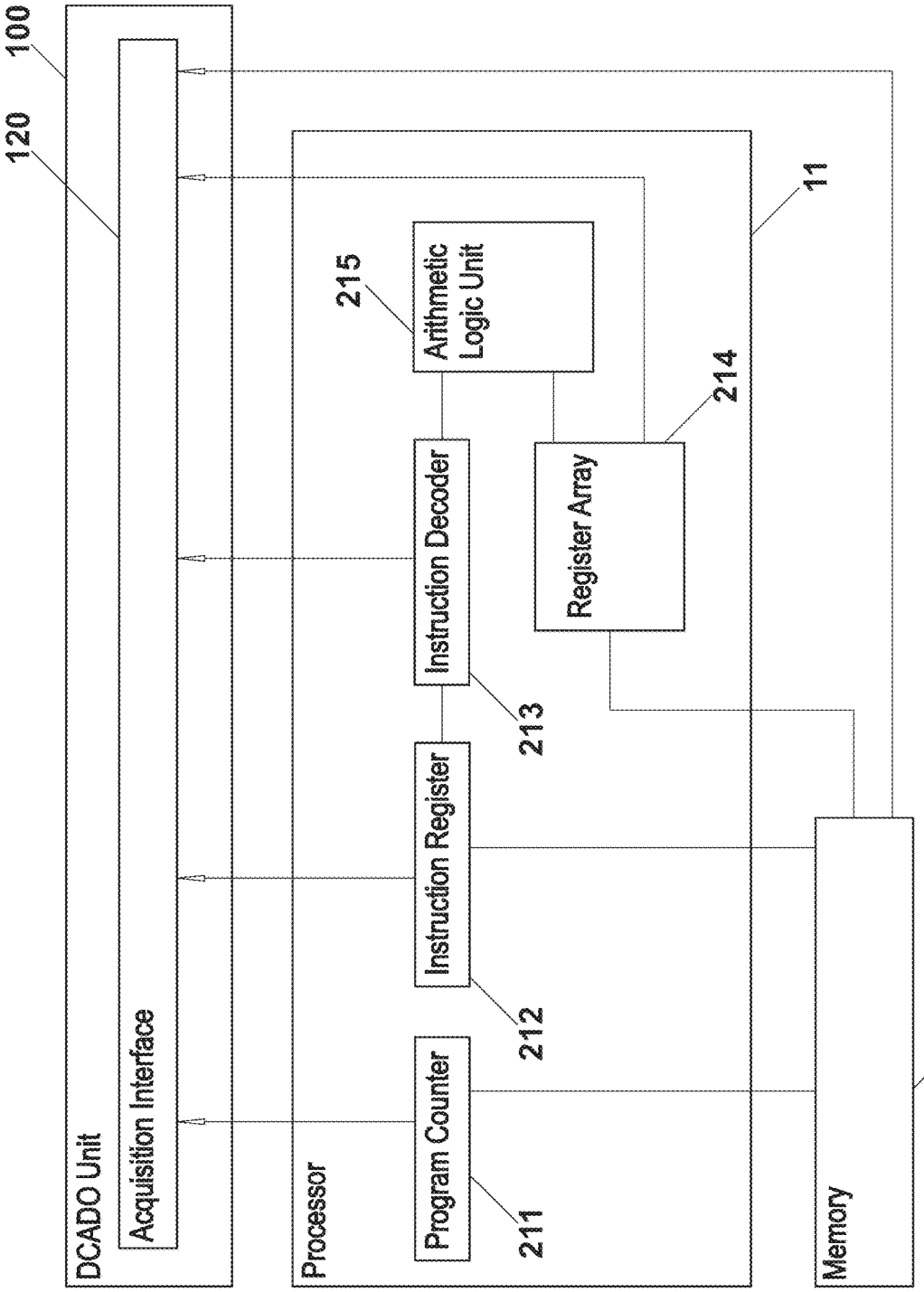
100
120
DCADO Unit
Acquisition Interface
Processor
Program Counter
211
Instruction Register
212
Instruction Decoder
213
215
Arithmetic Logic Unit
Register Array
214
11
Memory
12

FIG. 5

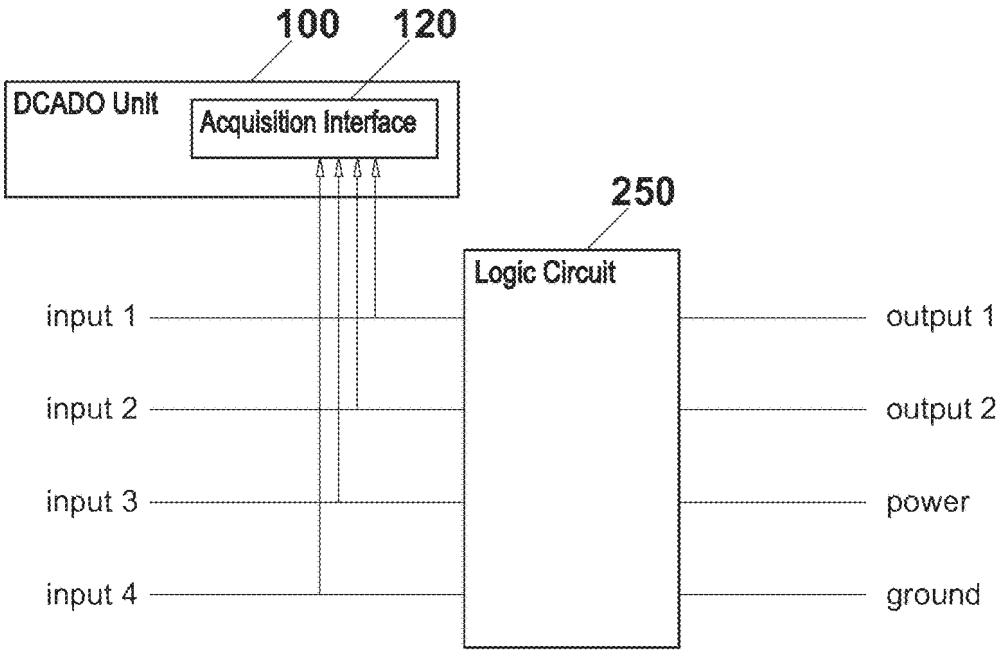
100
120
DCADO Unit
Acquisition Interface
250
Logic Circuit
input 1
input 2
input 3
input 4
output 1
output 2
power
ground

FIG. 6A

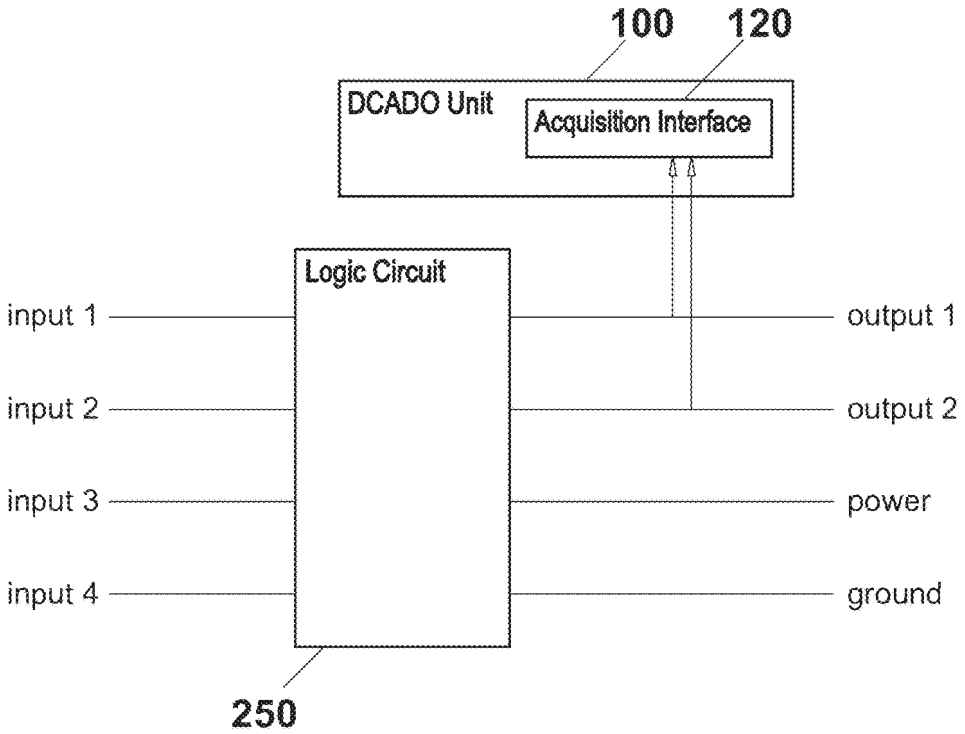
100
120
DCADO Unit
Acquisition Interface
Logic Circuit
input 1
input 2
input 3
input 4
output 1
output 2
power
ground
250

FIG. 6B

526

Instruction Set

Function (Parameter1, Parameter2, Parameter3, ...)

FIG. 7A

526

Instruction Set

SELECT Col1, Col2 ... FROM Tbl1, Tbl2 ... ;

FIG. 7B

526

Instruction Set

iconst_Value

FIG. 7C

526

Instruction Set

add Register1 Register2

FIG. 7D

526

Instruction Set

000000 00001 00010 00110 00000 100000

FIG. 7E

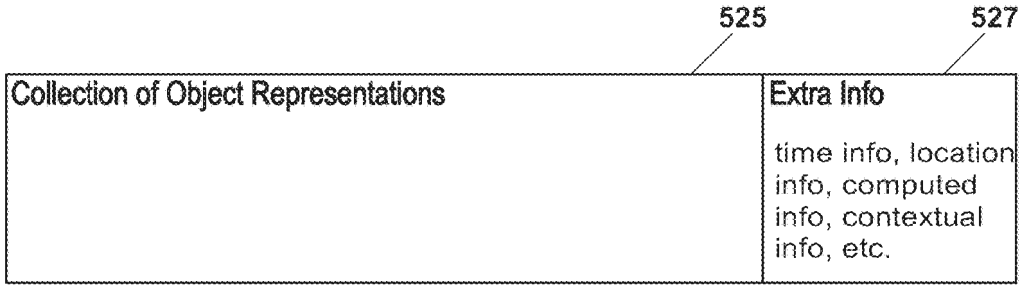
525
527
Collection of Object Representations
Extra Info
time info, location info, computed info, contextual info, etc.

FIG. 8A

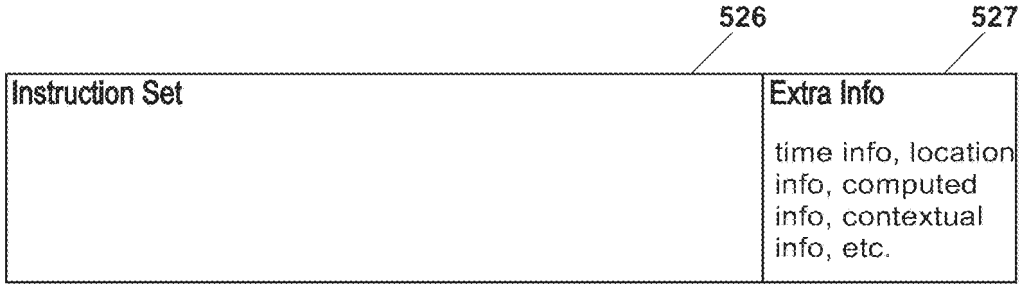
526
527
Instruction Set
Extra Info
time info, location info, computed info, contextual info, etc.

FIG. 8B

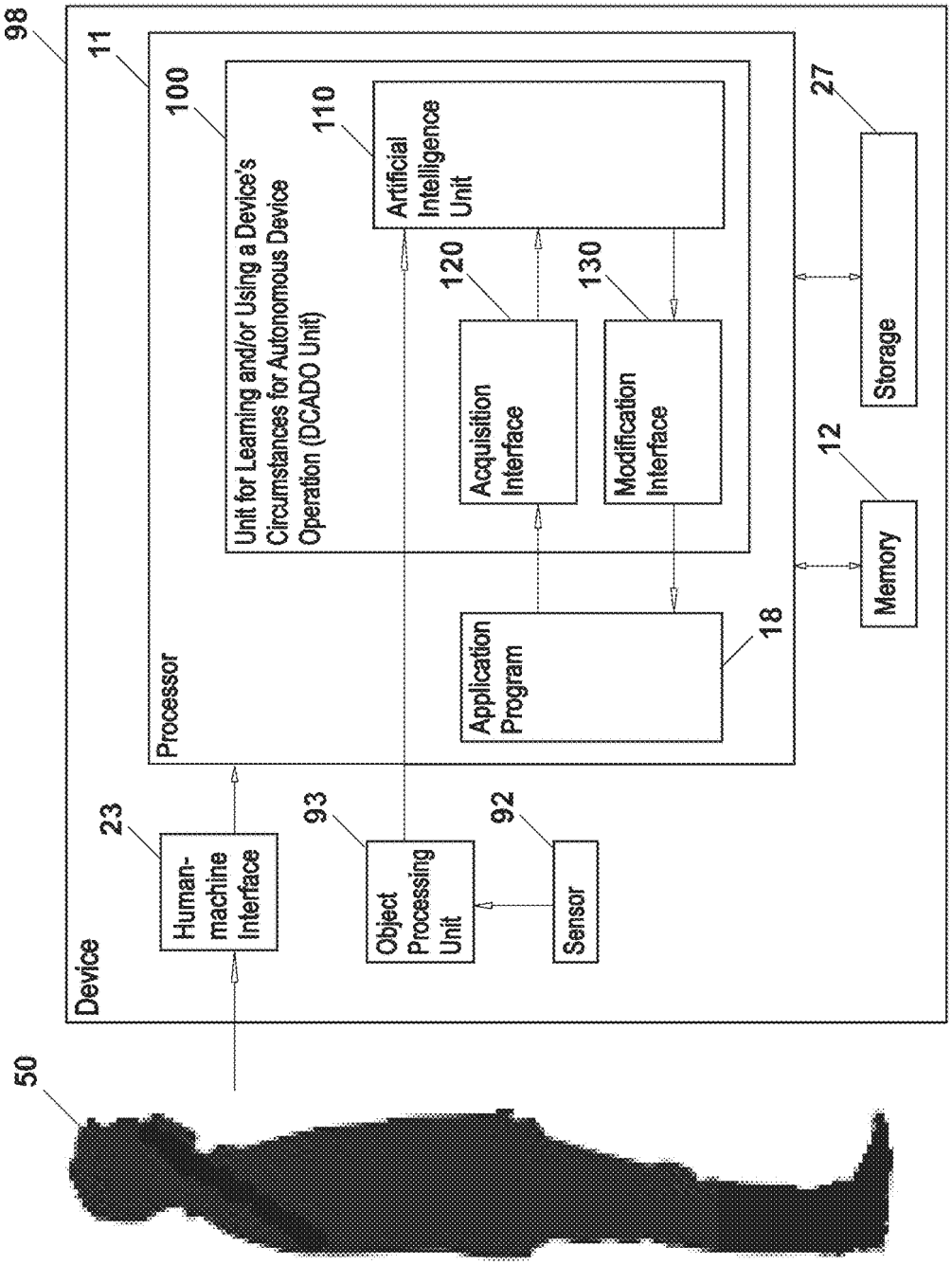
98
11
Device
Processor
100
Unit for Learning and/or Using a Device's Circumstances for Autonomous Device Operation (DCADO Unit)
110
Artificial Intelligence Unit
120
Acquisition Interface
130
Modification Interface
Application Program
18
23
Human-machine Interface
93
Object Processing Unit
92
Sensor
50
27
Storage
12
Memory

FIG. 9

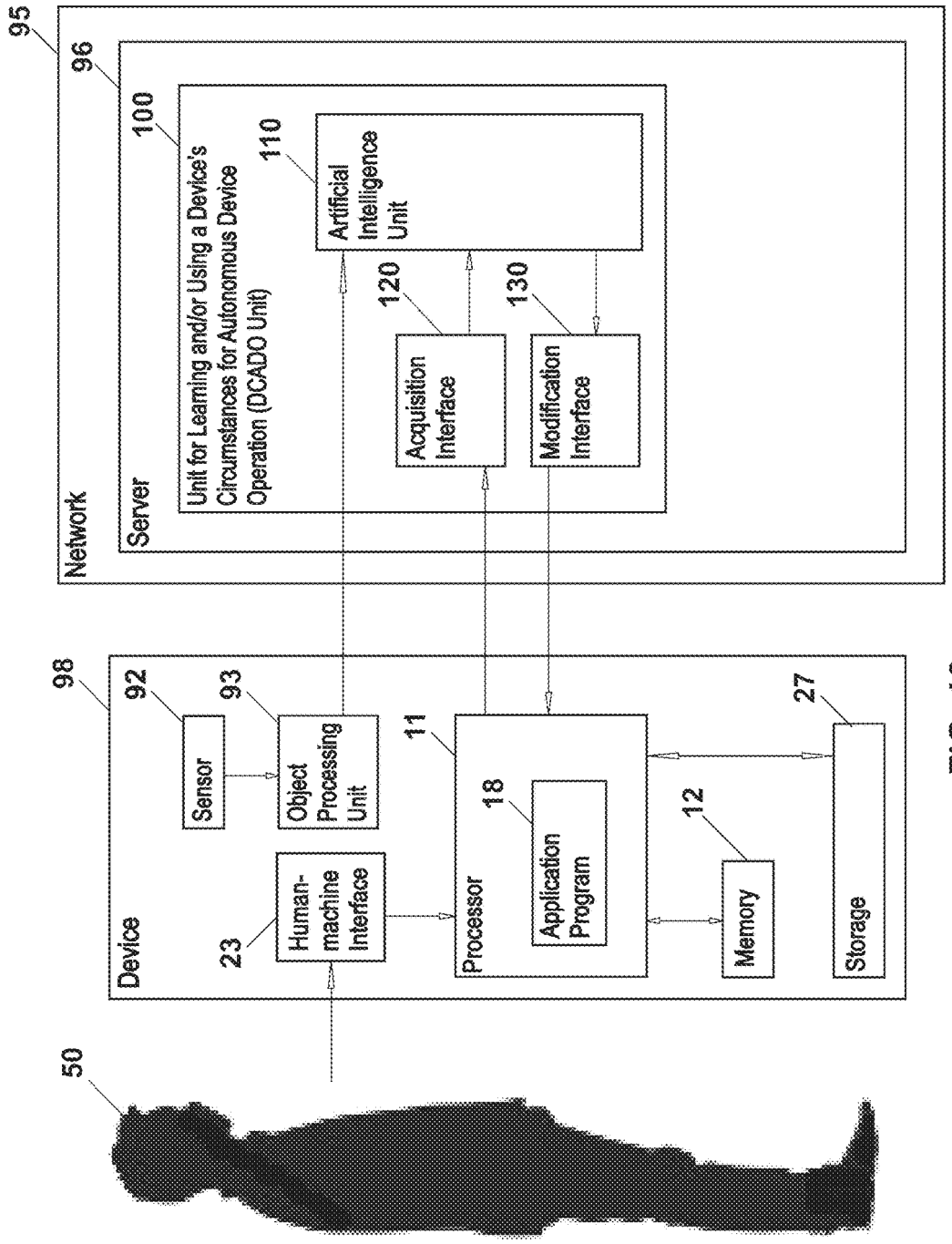
95
Network
96
Server
100
Unit for Learning and/or Using a Device's Circumstances for Autonomous Device Operation (DCADO Unit)
110
Artificial Intelligence Unit
120
Acquisition Interface
130
Modification Interface
98
Device
92
Sensor
93
Object Processing Unit
23
Human-machine Interface
11
Processor
18
Application Program
12
Memory
27
Storage
50

FIG. 10

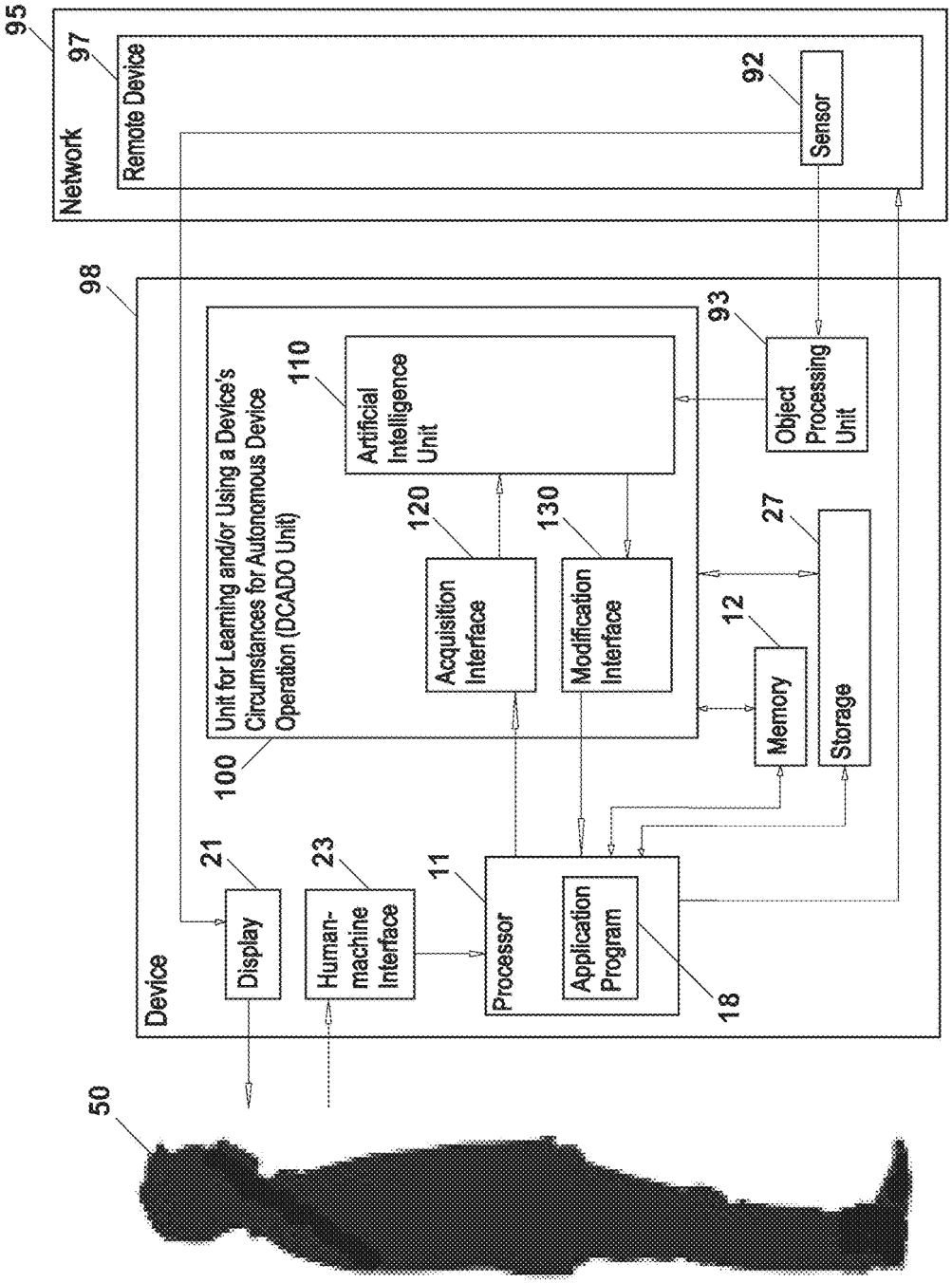
95
Network
97
Remote Device
92
Sensor
98
Device
Unit for Learning and/or Using a Device's Circumstances for Autonomous Device Operation (DCADO Unit)
100
110
Artificial Intelligence Unit
120
Acquisition Interface
130
Modification Interface
93
Object Processing Unit
27
Storage
12
Memory
21
Display
23
Human-machine Interface
11
Processor
Application Program
18
50

FIG. 11

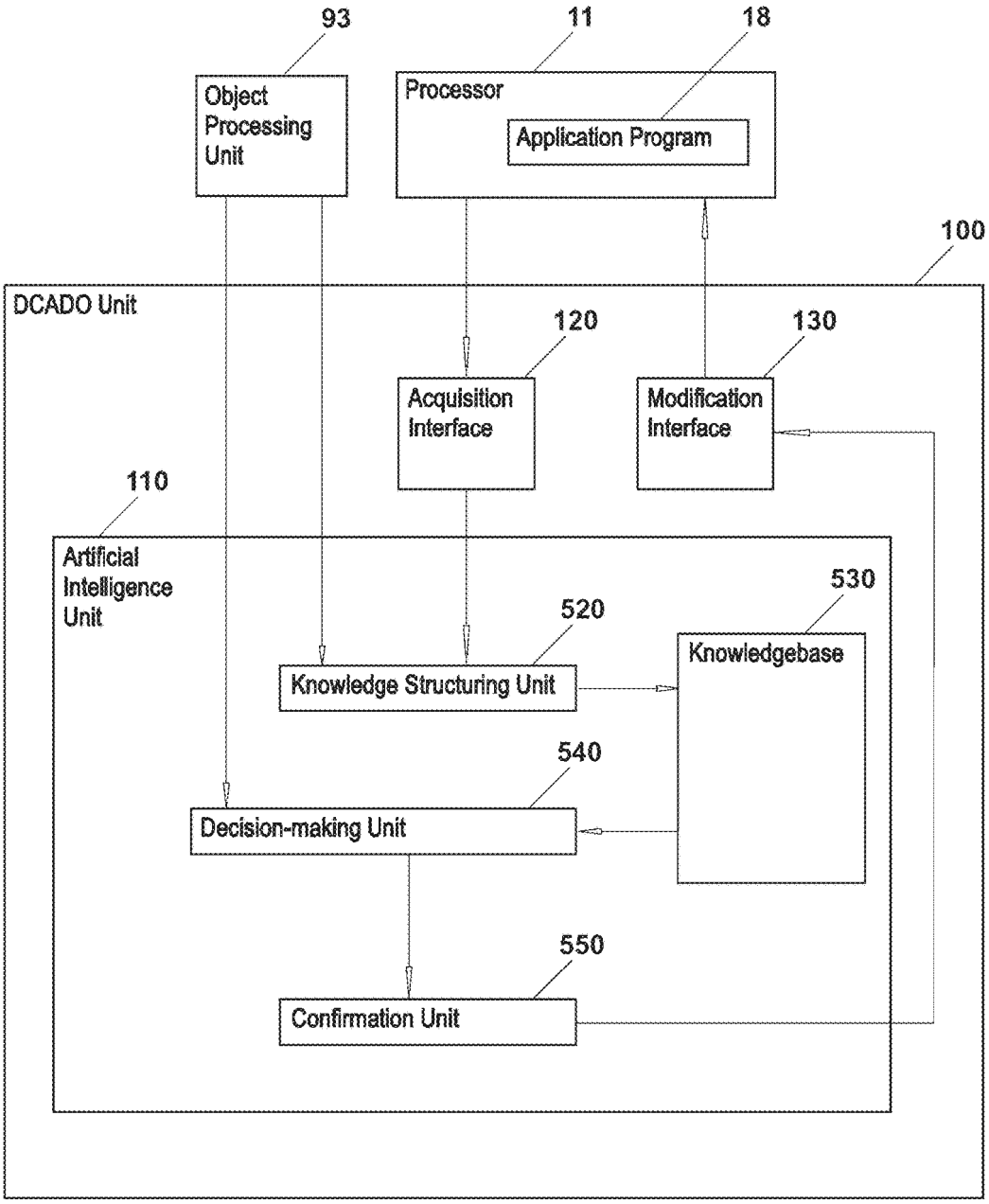
93
11
18
Object Processing Unit
Processor
Application Program
100
DCADO Unit
120
130
Acquisition Interface
Modification Interface
110
Artificial Intelligence Unit
530
520
Knowledgebase
Knowledge Structuring Unit
540
Decision-making Unit
550
Confirmation Unit

FIG. 12

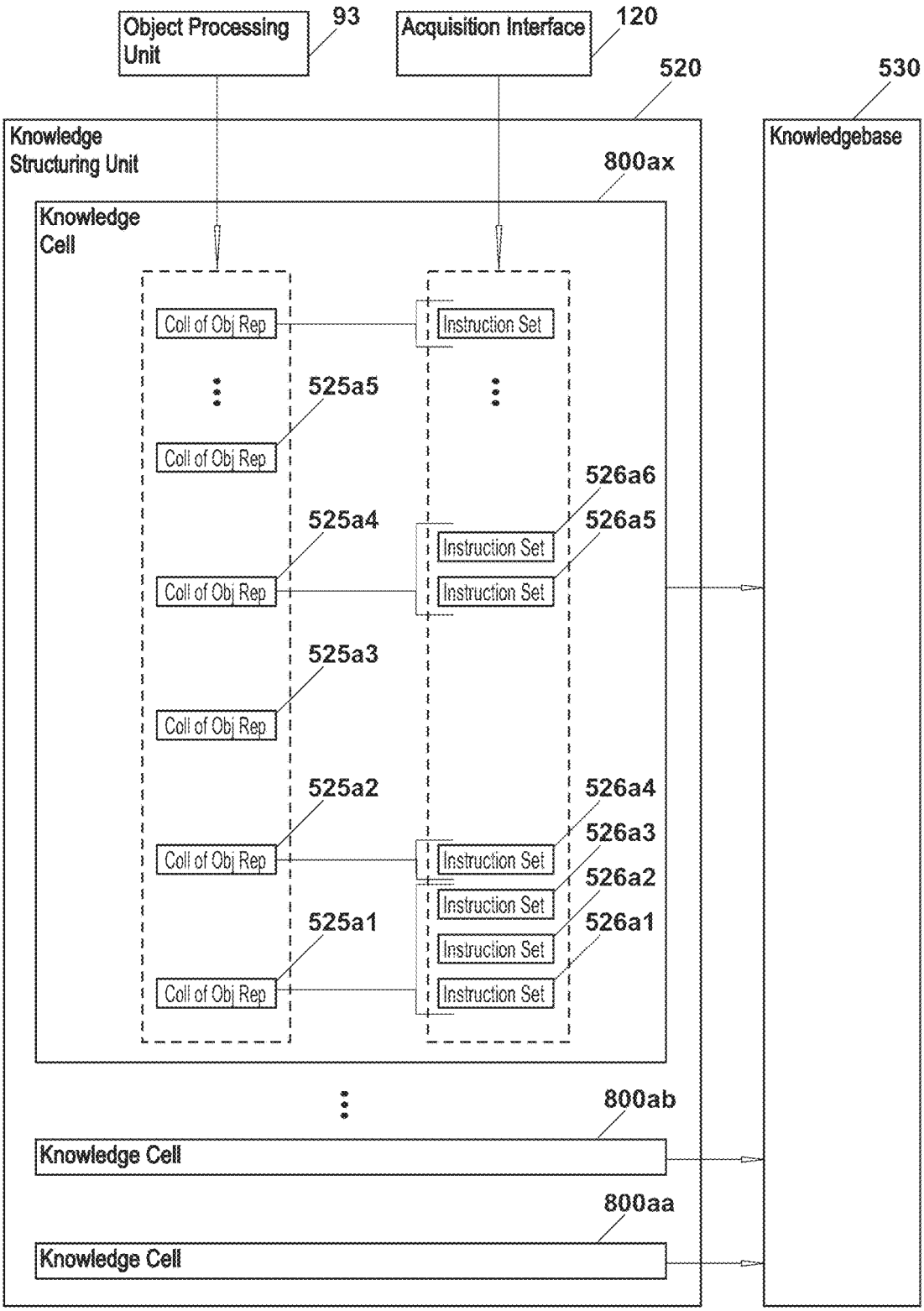
Object Processing Unit
93
Acquisition Interface
120
520
530
Knowledge Structuring Unit
Knowledgebase
800ax
Knowledge Cell
Coll of Obj Rep
Instruction Set
525a5
526a6
525a4
526a5
525a3
525a2
526a4
526a3
526a2
525a1
526a1
800ab
Knowledge Cell
800aa
Knowledge Cell

FIG. 13

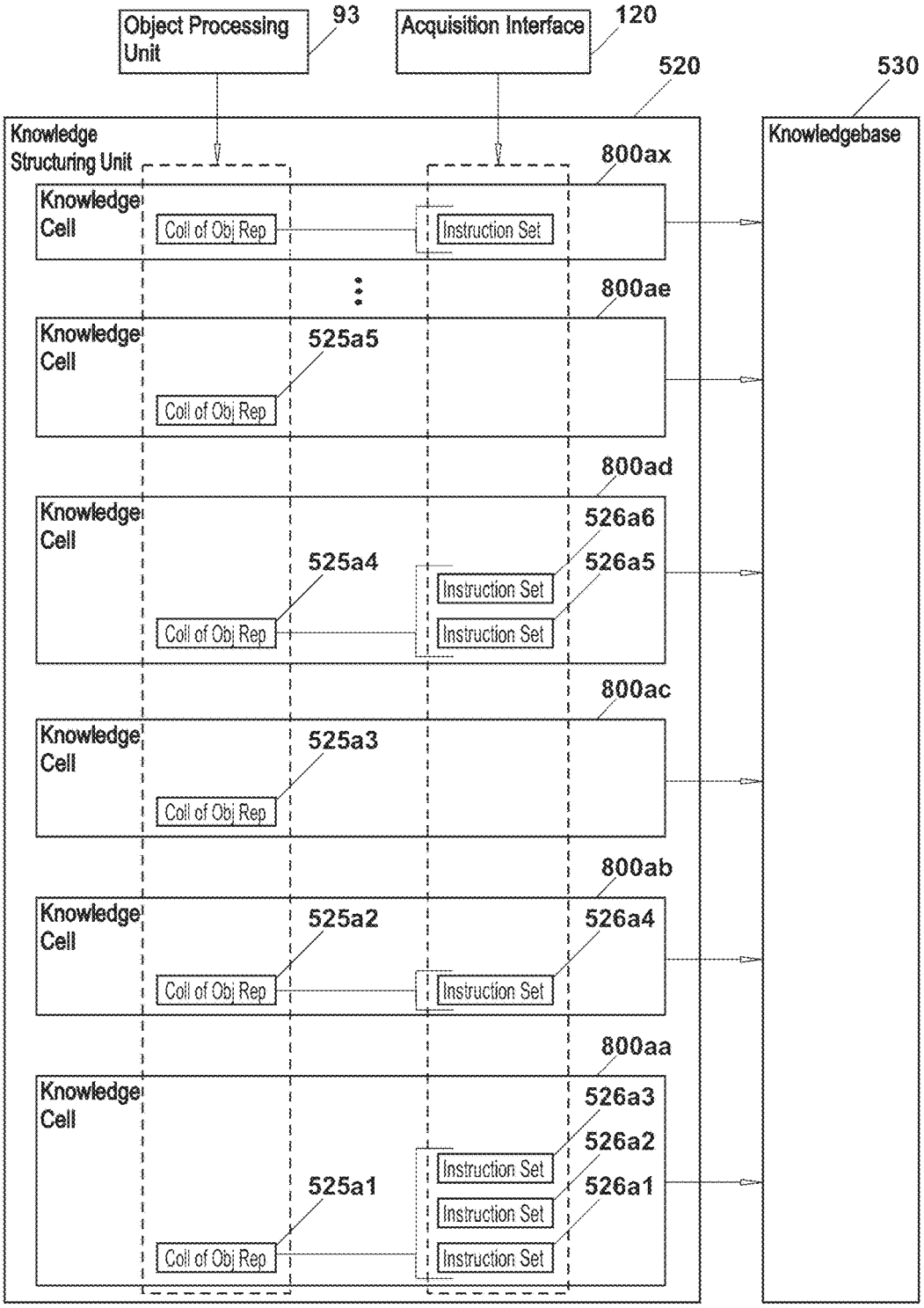
Object Processing Unit
93
Acquisition Interface
120
520
530
Knowledge Structuring Unit
Knowledgebase
800ax
Knowledge Cell
Coll of Obj Rep
Instruction Set
800ae
525a5
800ad
526a6
525a4
526a5
800ac
525a3
800ab
525a2
526a4
800aa
526a3
526a2
525a1
526a1

FIG. 14

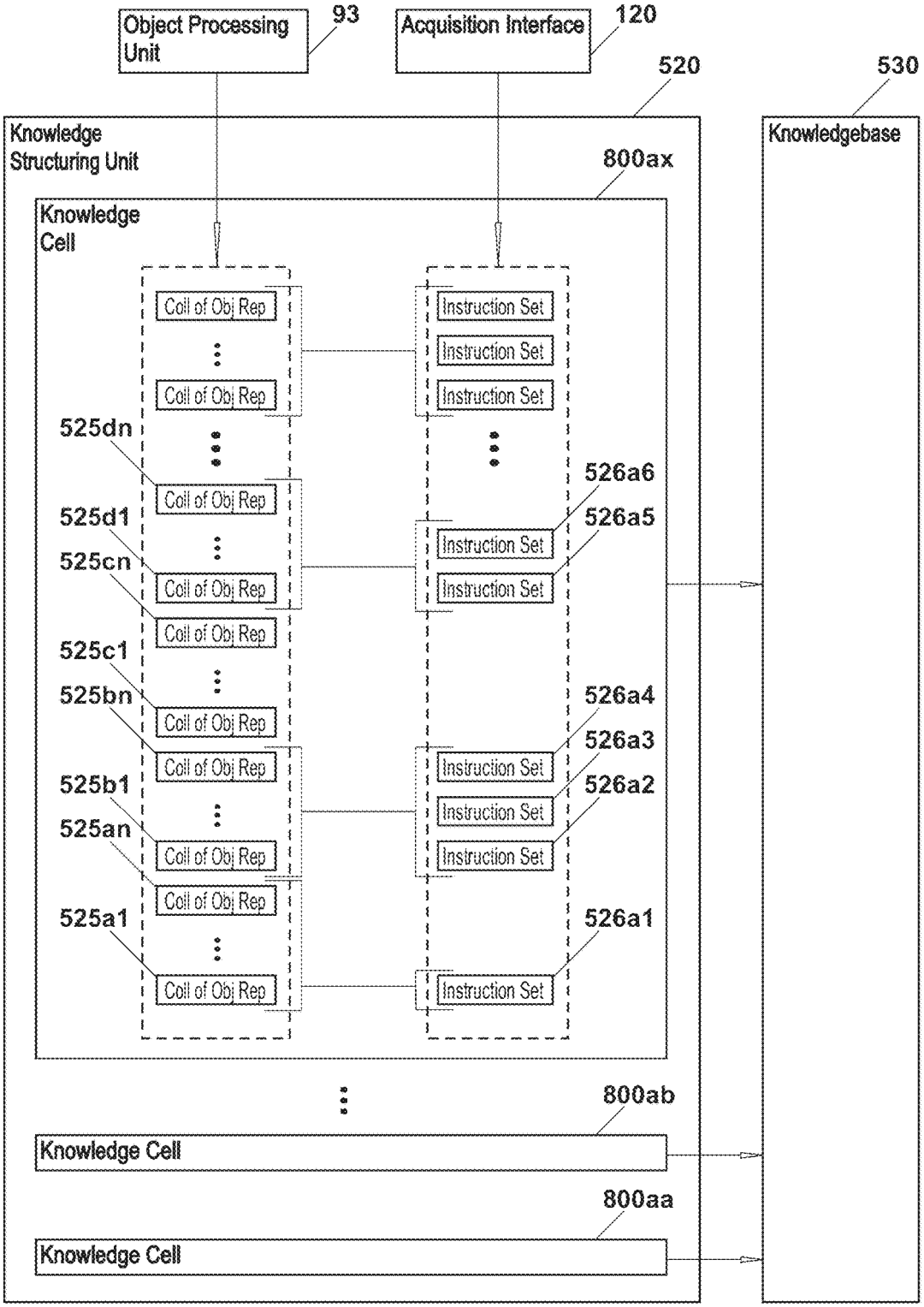
Object Processing Unit
93
Acquisition Interface
120
520
530
Knowledge Structuring Unit
Knowledgebase
800ax
Knowledge Cell
Coll of Obj Rep
Instruction Set
525dn
525d1
525cn
525c1
525bn
525b1
525an
525a1
526a6
526a5
526a4
526a3
526a2
526a1
800ab
Knowledge Cell
800aa
Knowledge Cell

FIG. 15

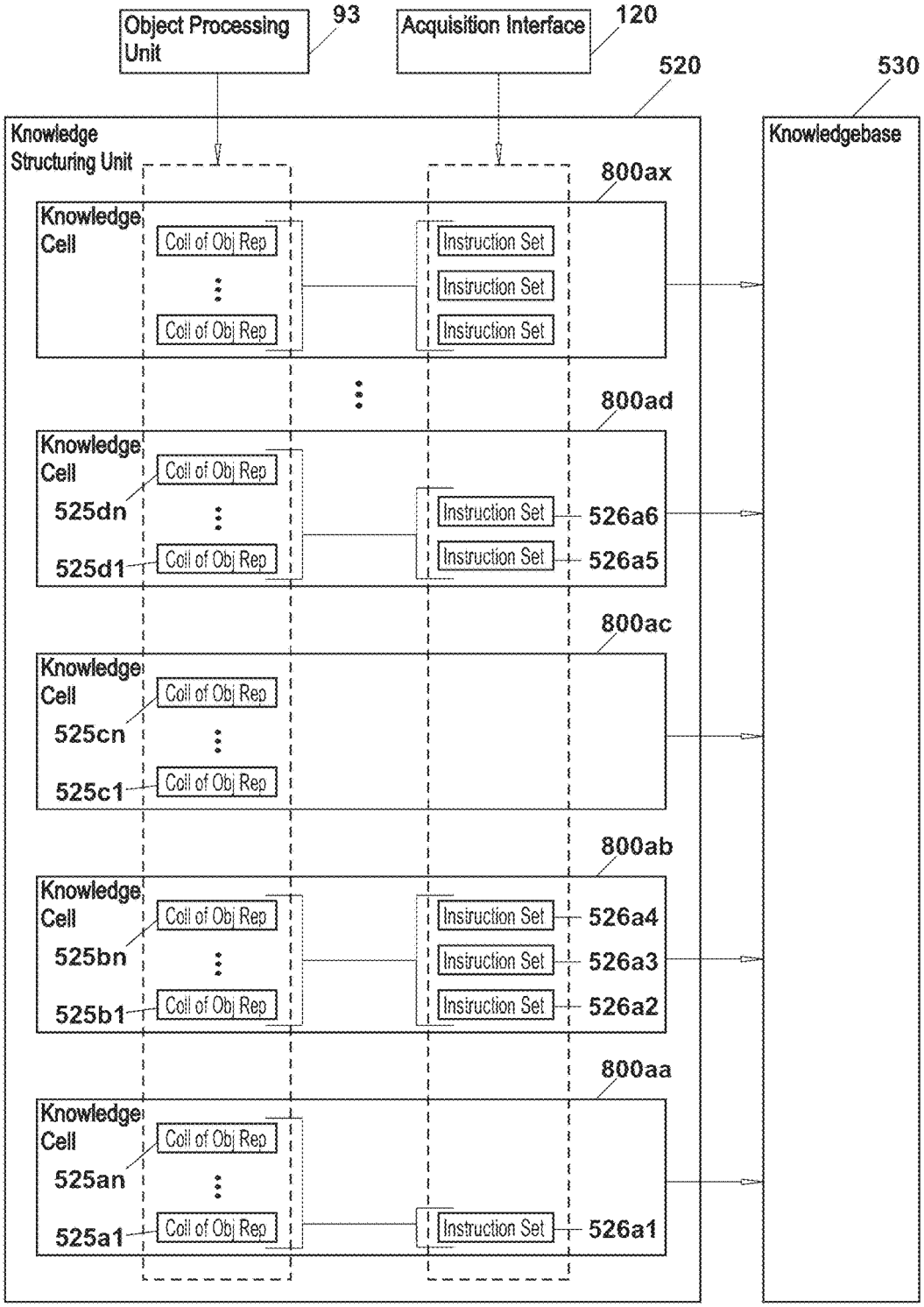
Object Processing Unit
93
Acquisition Interface
120
520
530
Knowledge Structuring Unit
Knowledgebase
800ax
Knowledge Cell
Coll of Obj Rep
Coll of Obj Rep
Instruction Set
Instruction Set
Instruction Set
800ad
Knowledge Cell
525dn
525d1
Coll of Obj Rep
Coll of Obj Rep
Instruction Set
Instruction Set
526a6
526a5
800ac
Knowledge Cell
525cn
525c1
Coll of Obj Rep
Coll of Obj Rep
800ab
Knowledge Cell
525bn
525b1
Coll of Obj Rep
Coll of Obj Rep
Instruction Set
Instruction Set
Instruction Set
526a4
526a3
526a2
800aa
Knowledge Cell
525an
525a1
Coll of Obj Rep
Coll of Obj Rep
Instruction Set
526a1

FIG. 16

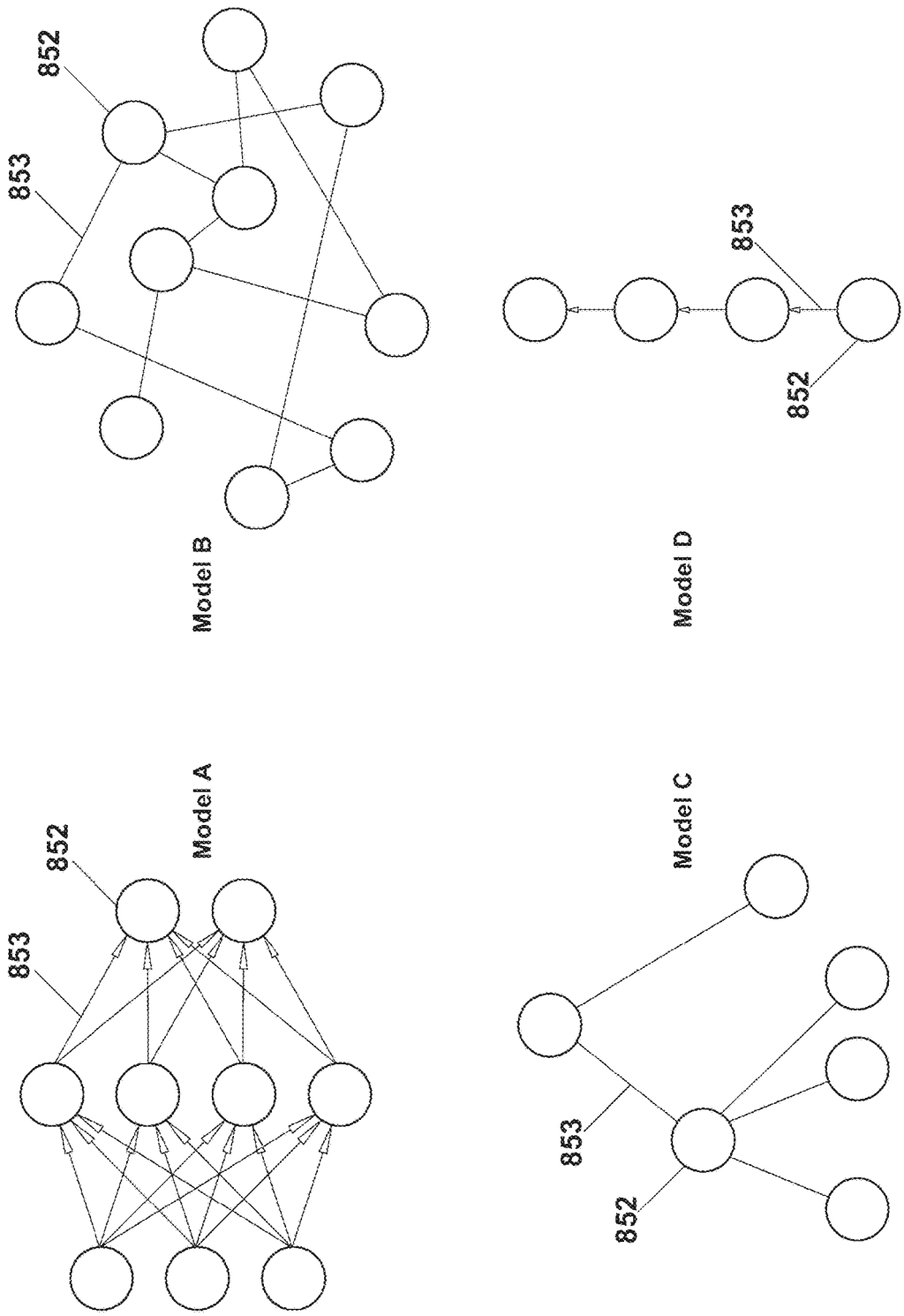

FIG. 17

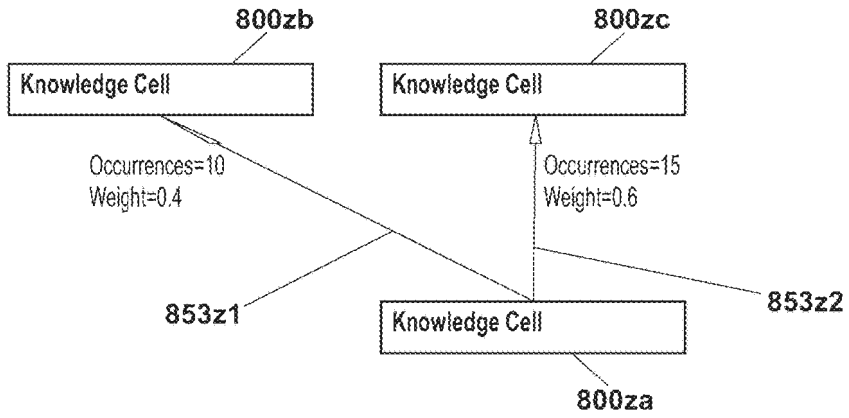

FIG. 18A

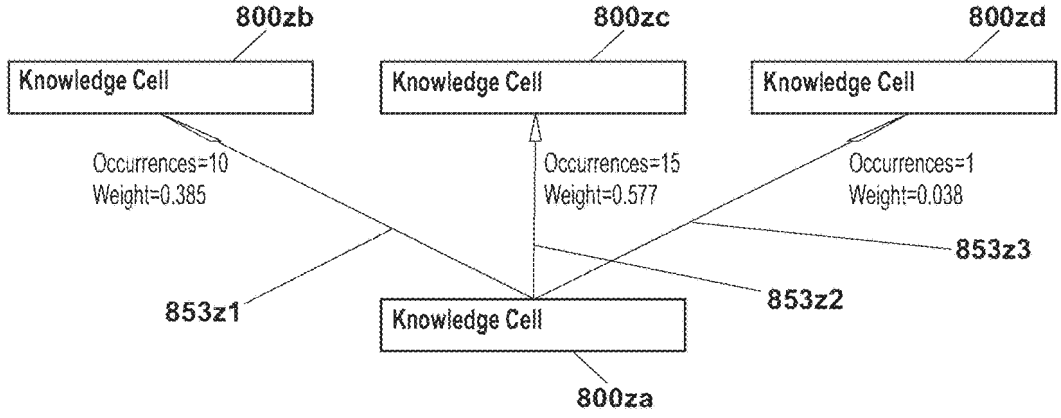

FIG. 18B

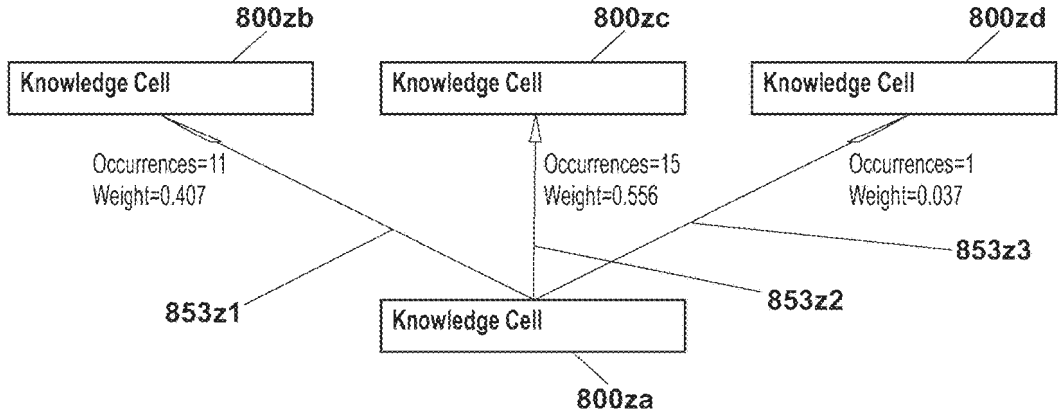

FIG. 18C

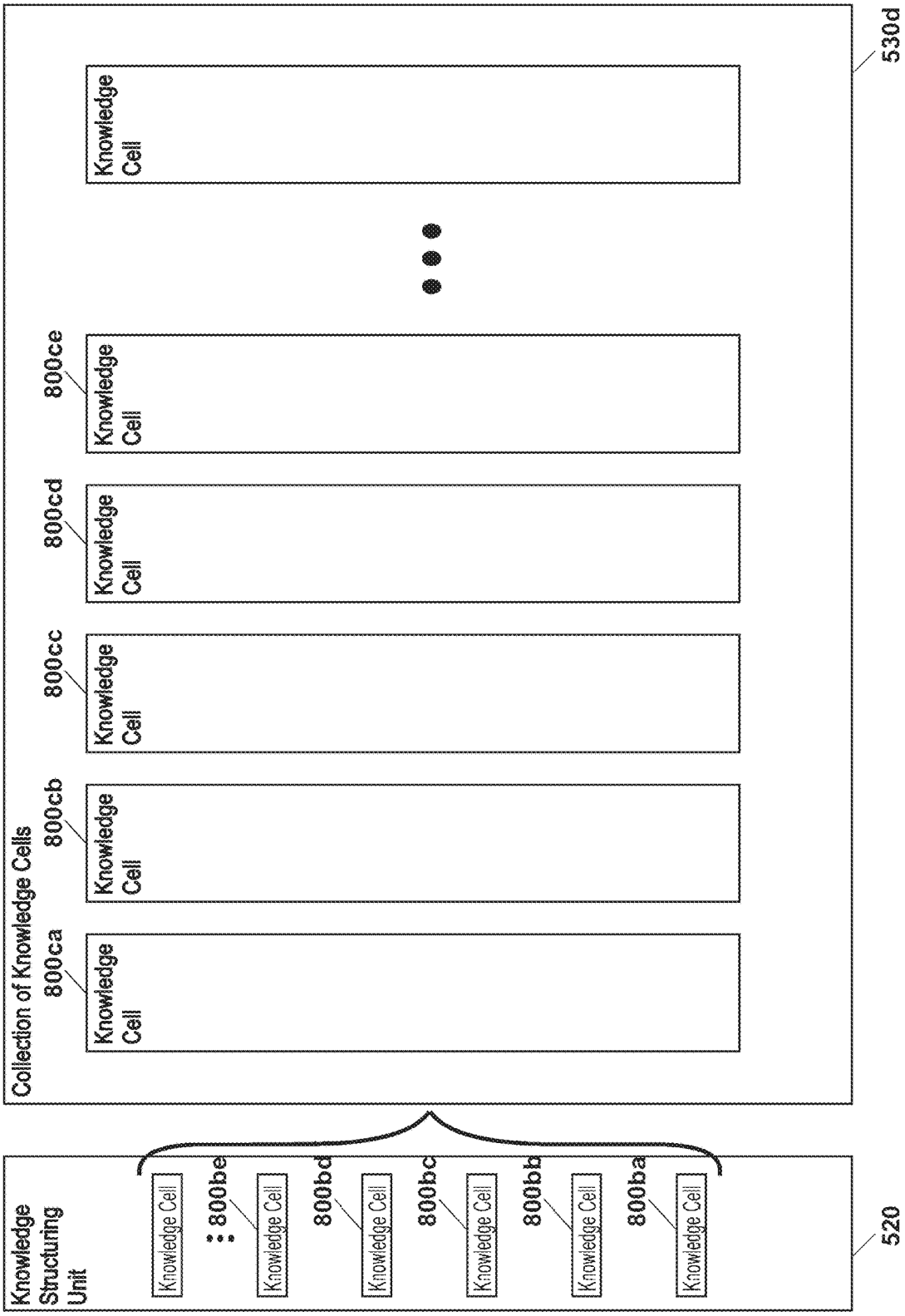
Collection of Knowledge Cells
530d
800ca
800cb
800cc
800cd
800ce
Knowledge Cell
Knowledge Cell
Knowledge Cell
Knowledge Cell
Knowledge Cell
Knowledge Cell
Knowledge Cell
Knowledge Cell
Knowledge Cell
Knowledge Structuring Unit
520
800be
800bd
800bc
800bb
800ba
Knowledge Cell
Knowledge Cell
Knowledge Cell
Knowledge Cell
Knowledge Cell
Knowledge Cell

FIG. 19

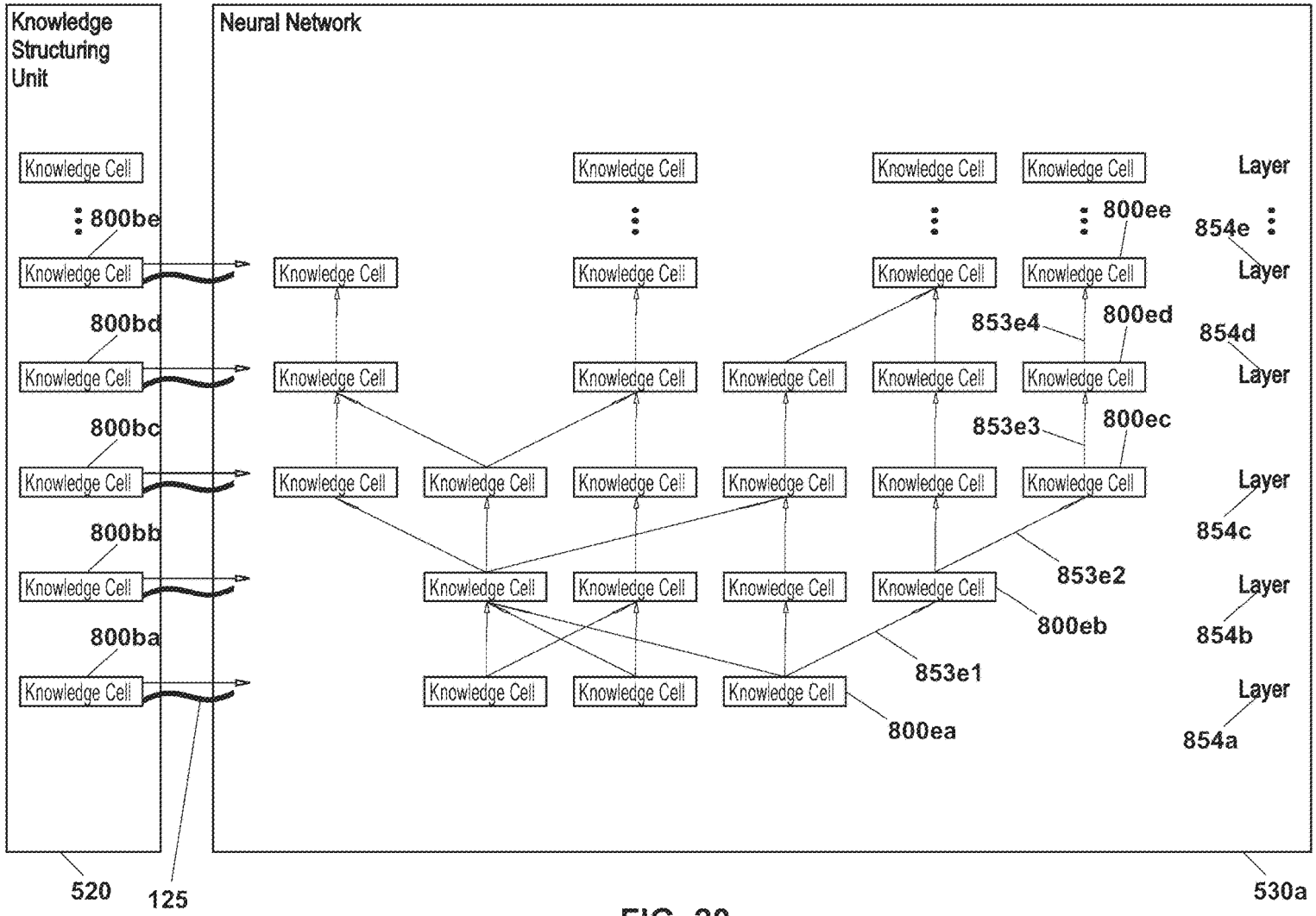
Knowledge Structuring Unit
Neural Network
Knowledge Cell
800be
800bd
800bc
800bb
800ba
800ee
800ed
800ec
800eb
800ea
853e4
853e3
853e2
853e1
Layer
854e
854d
854c
854b
854a
520
125
530a

FIG. 20

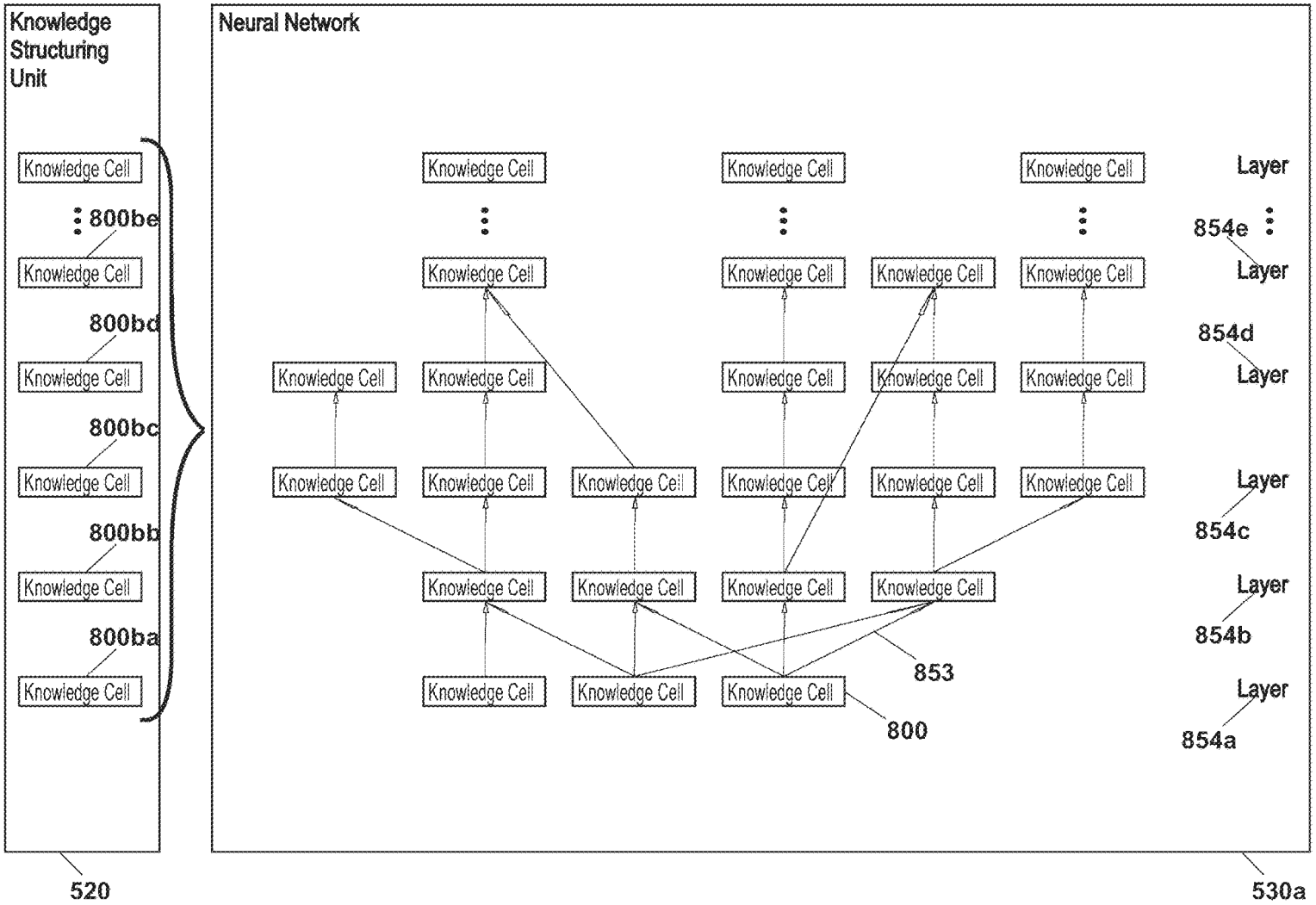
Knowledge Structuring Unit
Neural Network
Knowledge Cell
800be
800bd
800bc
800bb
800ba
Layer
854e
854d
854c
854b
854a
853
800
520
530a

FIG. 21

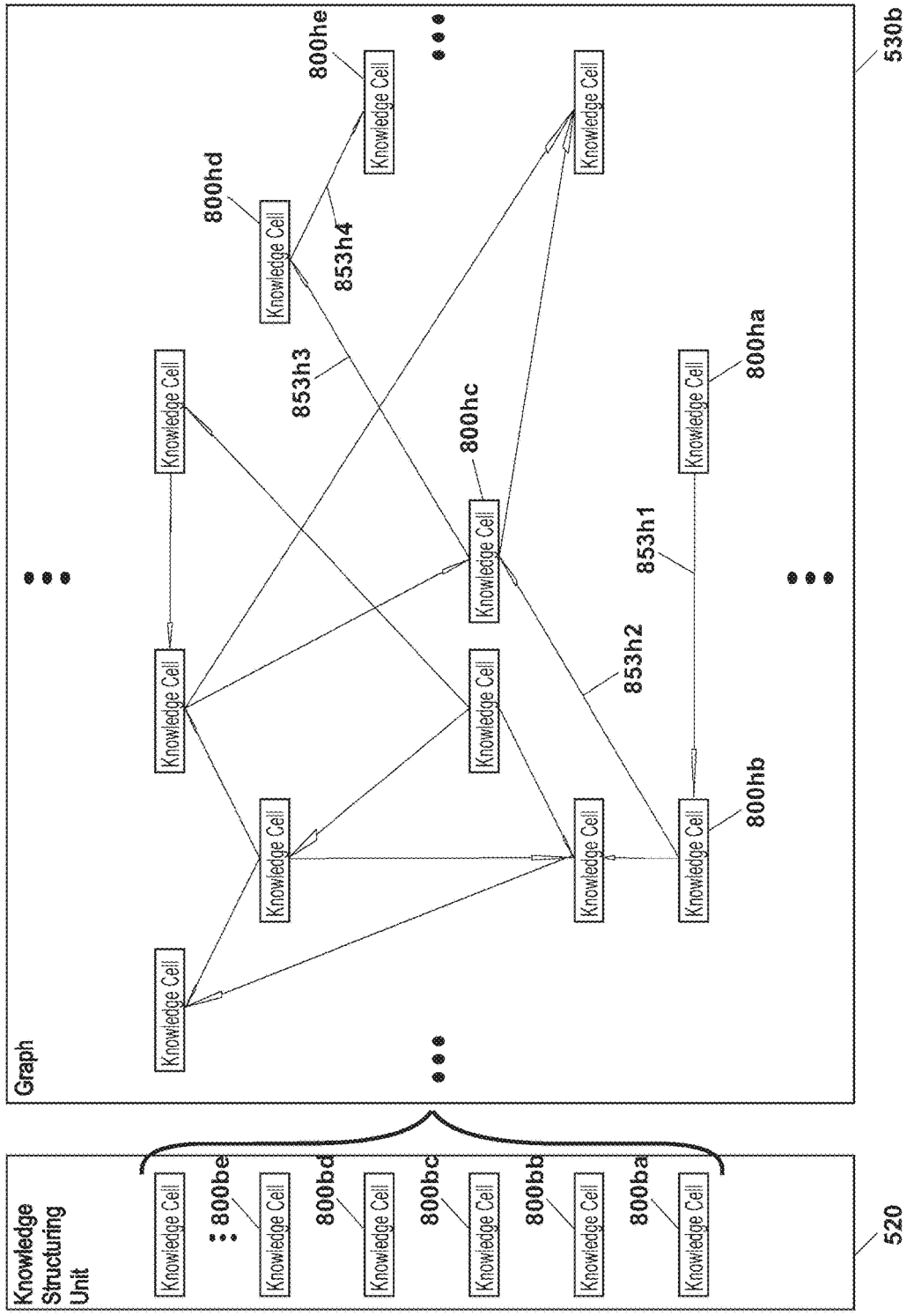
Knowledge Structuring Unit
Knowledge Cell
800be
800bd
800bc
800bb
800ba
520
Graph
530b
800he
800hd
853h4
853h3
800hc
800ha
853h1
853h2
800hb

FIG. 22

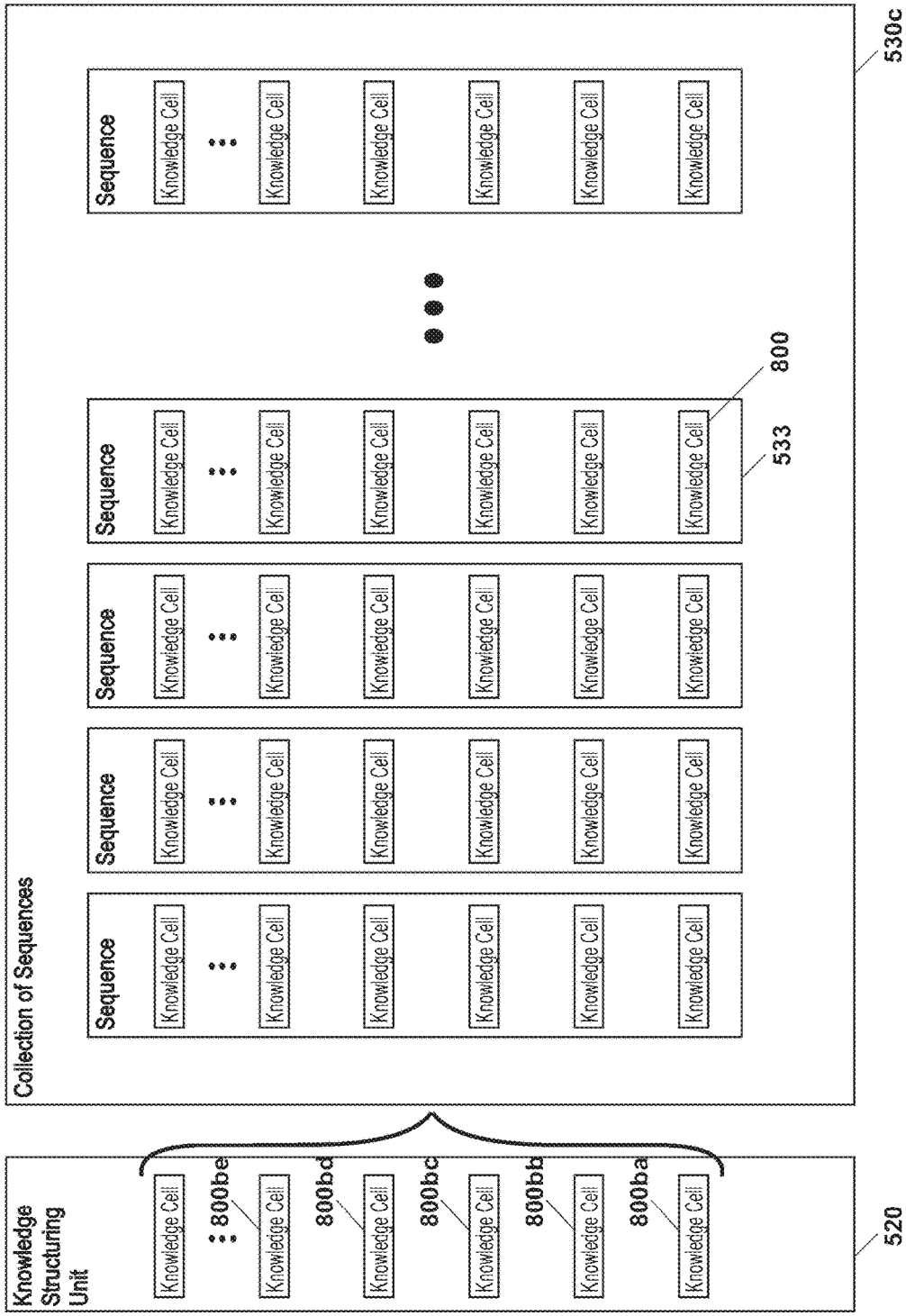
Knowledge Structuring Unit
Knowledge Cell
800be
800bd
800bc
800bb
800ba
520
Collection of Sequences
Sequence
533
800
530c

FIG. 23

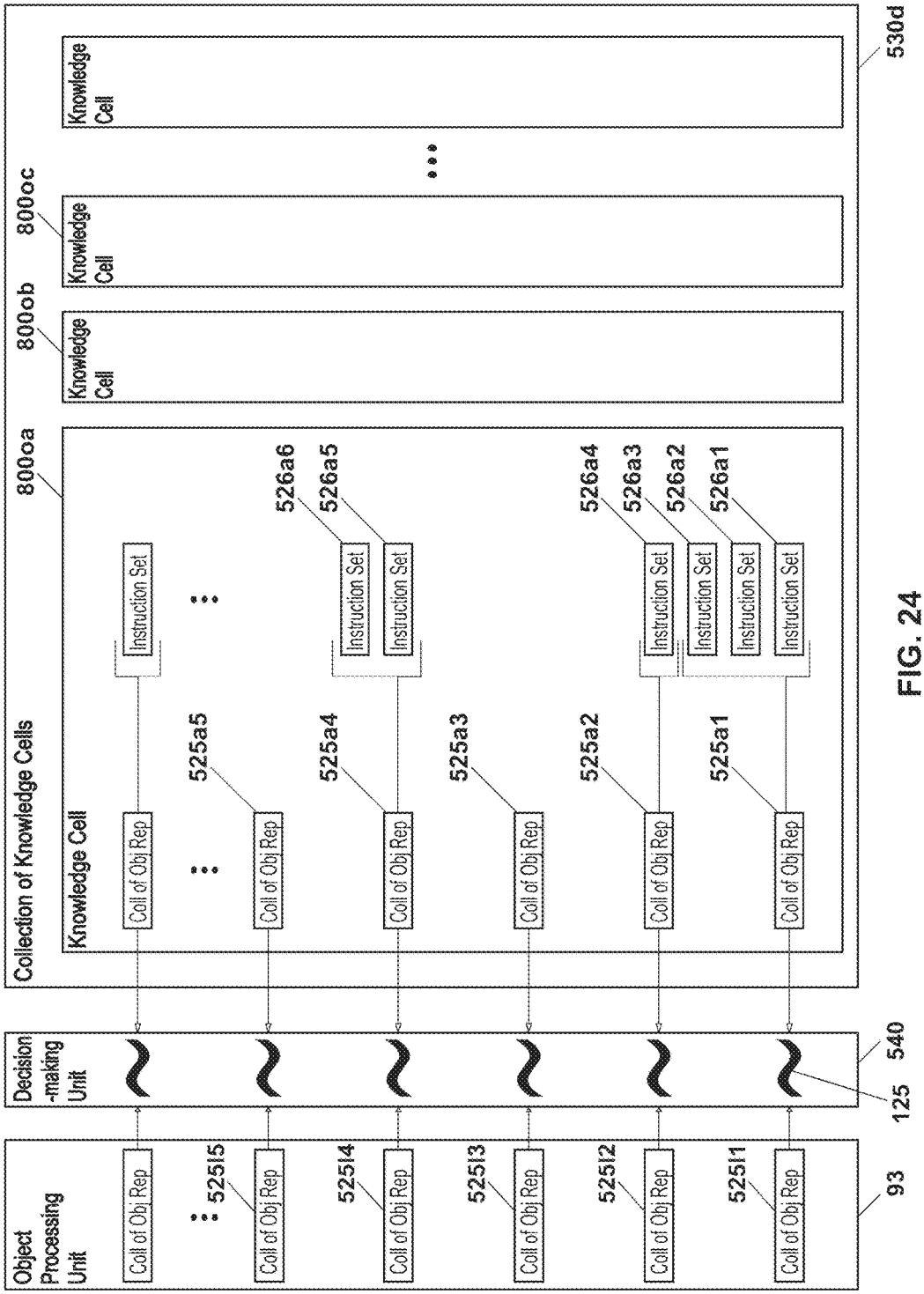
Object Processing Unit
Decision -making Unit
Collection of Knowledge Cells
800oa
800ob
800oc
530d
540
125
93
Knowledge Cell
Coll of Obj Rep
Instruction Set
525l5
525l4
525l3
525l2
525l1
525a5
525a4
525a3
525a2
525a1
526a6
526a5
526a4
526a3
526a2
526a1

FIG. 24

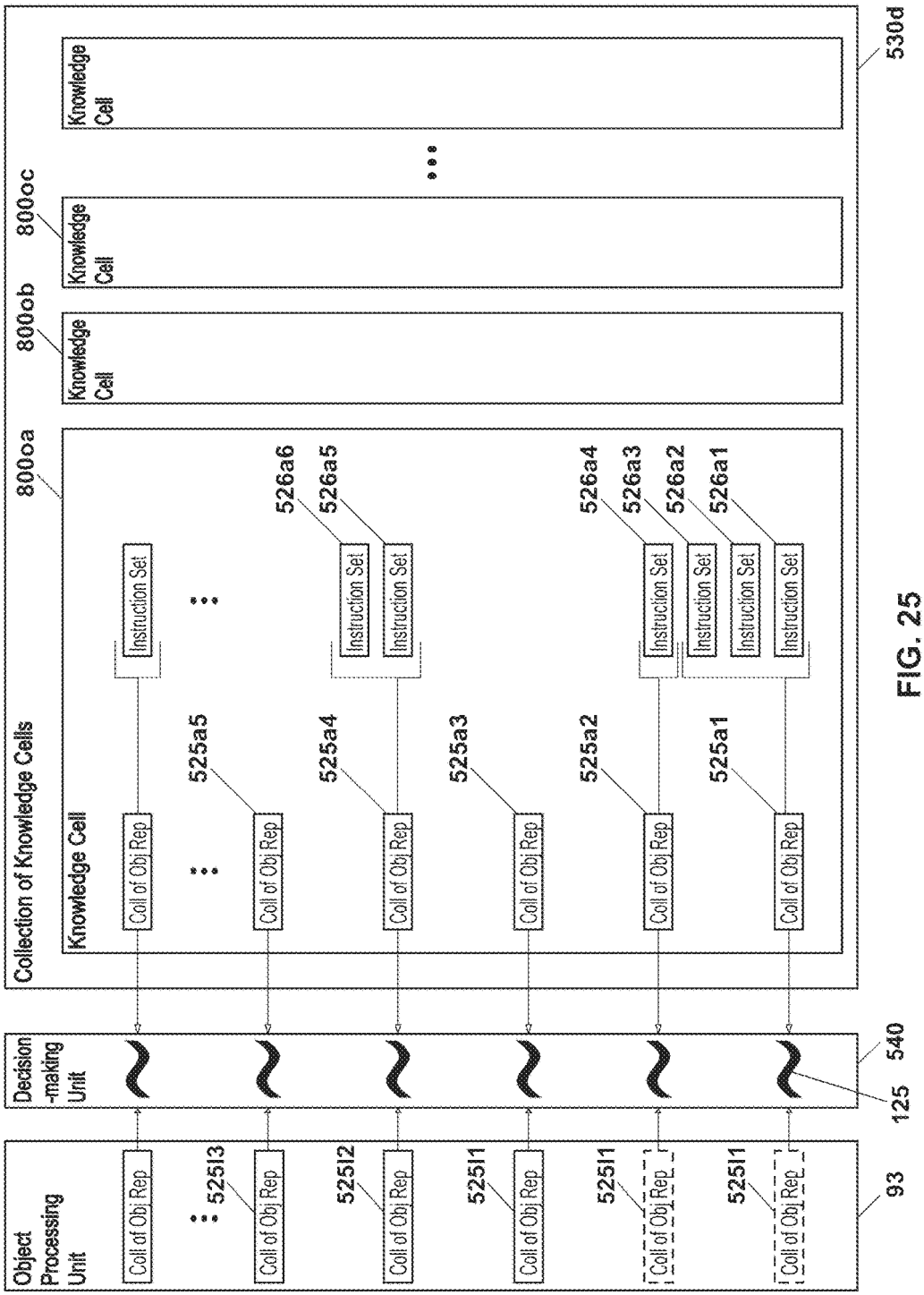
Object Processing Unit
Decision -making Unit
Collection of Knowledge Cells
Knowledge Cell
Coll of Obj Rep
Instruction Set
525I3
525I2
525I1
525a5
525a4
525a3
525a2
525a1
526a6
526a5
526a4
526a3
526a2
526a1
800oa
800ob
800oc
530d
540
125
93

FIG. 25

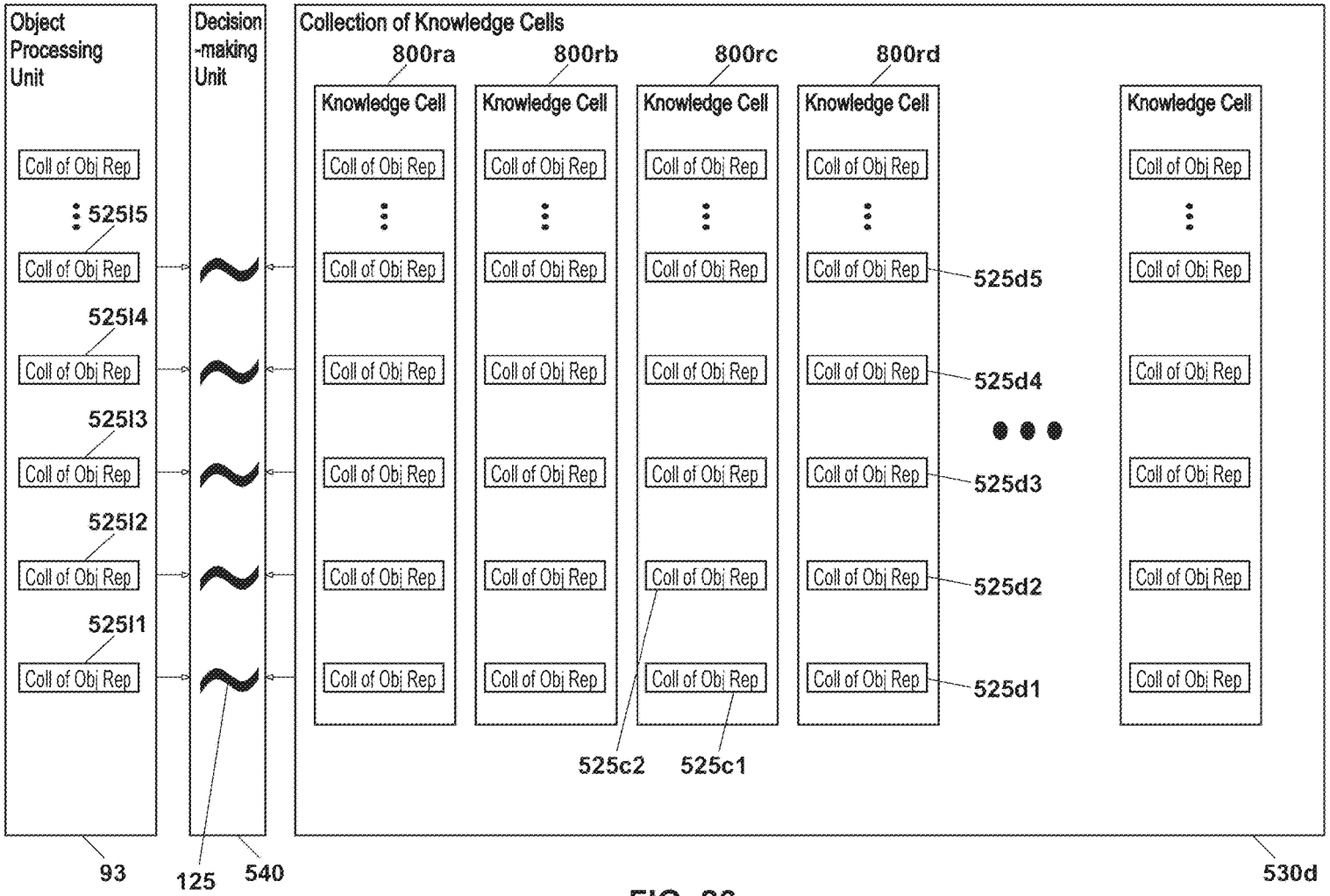
Object Processing Unit
Decision -making Unit
Collection of Knowledge Cells
800ra
800rb
800rc
800rd
Knowledge Cell
Coll of Obj Rep
525l5
525l4
525l3
525l2
525l1
525d5
525d4
525d3
525d2
525d1
525c2
525c1
93
125
540
530d

FIG. 26

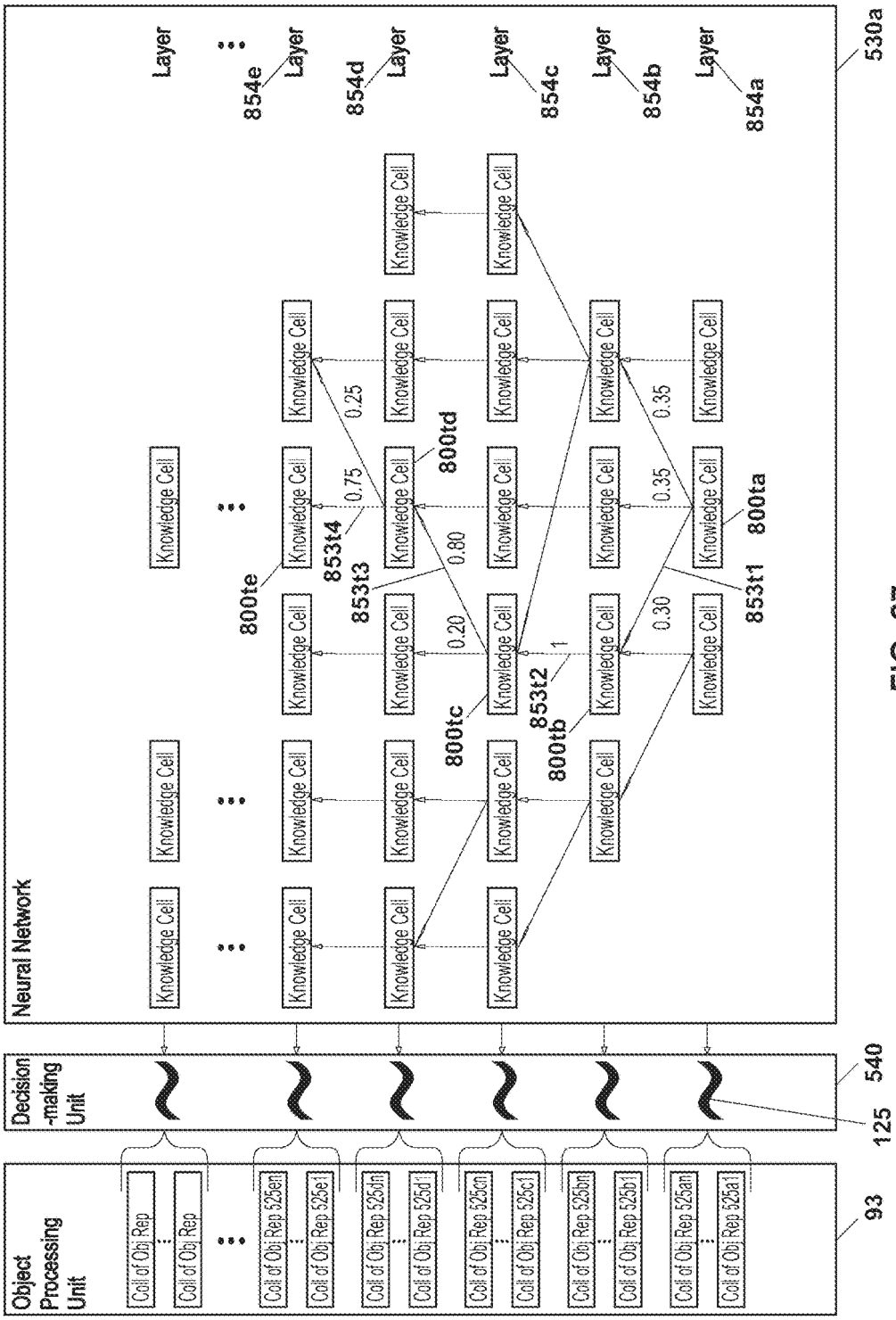
Neural Network
Layer
854e
854d
854c
854b
854a
530a
Knowledge Cell
800te
800td
800tc
800tb
800ta
853t4
853t3
853t2
853t1
0.75
0.25
0.80
0.20
1
0.35
0.35
0.30
Decision -making Unit
540
125
Object Processing Unit
Coll of Obj Rep
Coll of Obj Rep 525en
Coll of Obj Rep 525e1
Coll of Obj Rep 525dn
Coll of Obj Rep 525d1
Coll of Obj Rep 525cn
Coll of Obj Rep 525c1
Coll of Obj Rep 525bn
Coll of Obj Rep 525b1
Coll of Obj Rep 525an
Coll of Obj Rep 525a1
93

FIG. 27

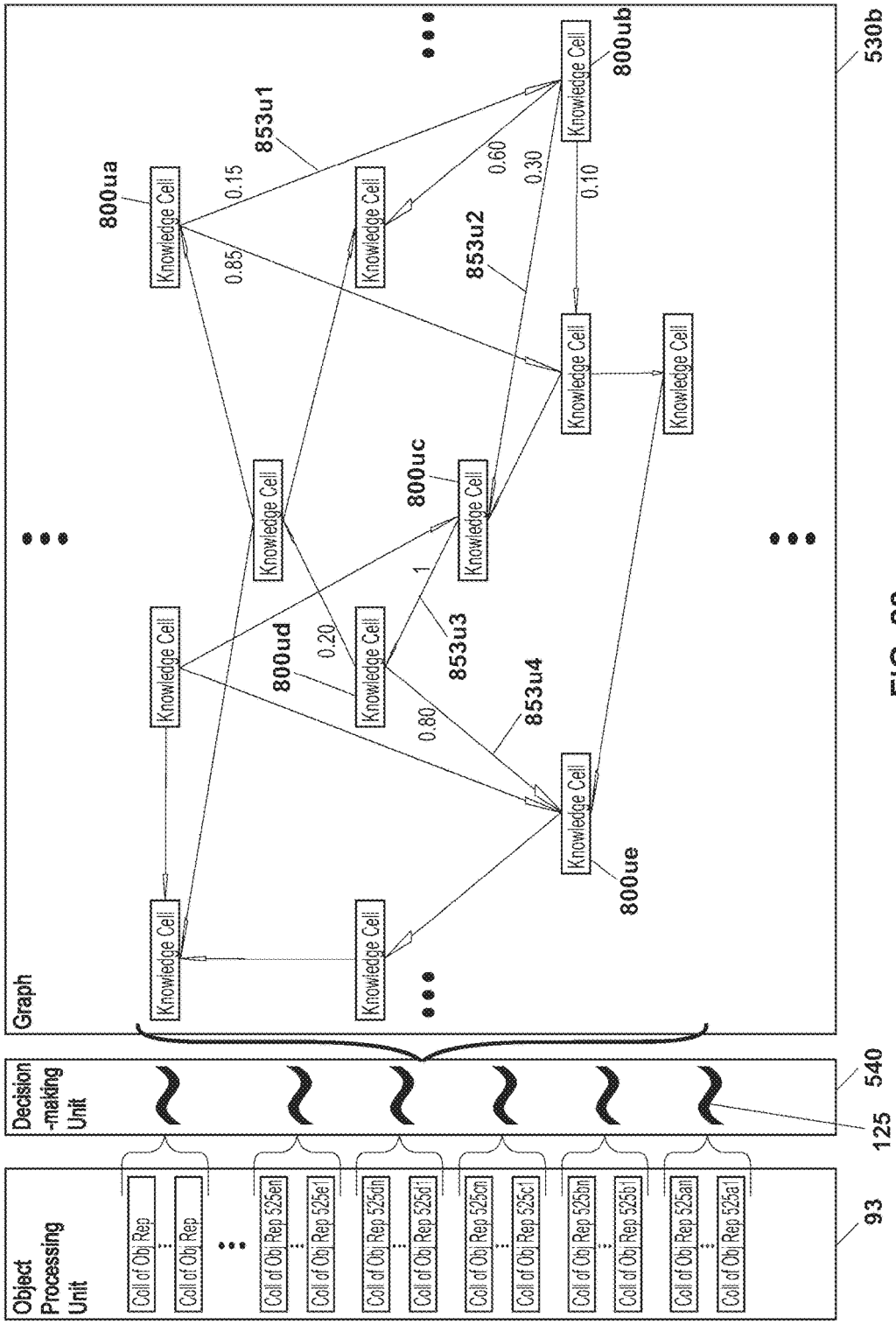
Graph
Knowledge Cell
800ua
800ub
800uc
800ud
800ue
853u1
853u2
853u3
853u4
0.15
0.85
0.60
0.30
0.10
0.20
0.80
1
530b
Decision -making Unit
540
125
Object Processing Unit
Coll of Obj Rep
Coll of Obj Rep 525en
Coll of Obj Rep 525e1
Coll of Obj Rep 525dn
Coll of Obj Rep 525d1
Coll of Obj Rep 525cn
Coll of Obj Rep 525c1
Coll of Obj Rep 525bn
Coll of Obj Rep 525b1
Coll of Obj Rep 525an
Coll of Obj Rep 525a1
93

FIG. 28

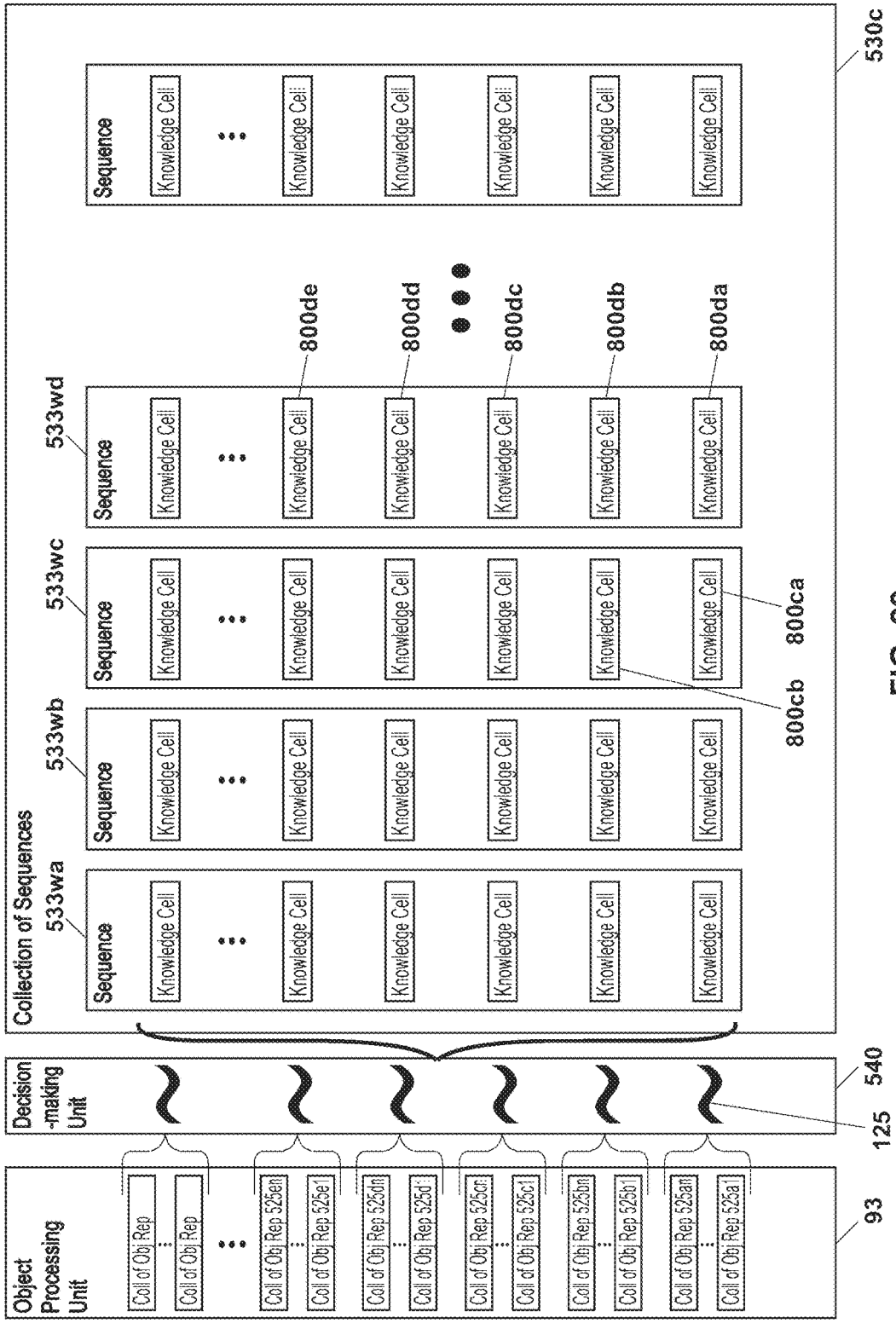
Object Processing Unit
Decision -making Unit
Collection of Sequences
533wa
533wb
533wc
533wd
Sequence
Knowledge Cell
Coll of Obj Rep
Coll of Obj Rep 525a1
Coll of Obj Rep 525a1
Coll of Obj Rep 525b1
Coll of Obj Rep 525b1
Coll of Obj Rep 525c1
Coll of Obj Rep 525c1
Coll of Obj Rep 525d1
Coll of Obj Rep 525d1
Coll of Obj Rep 525e1
Coll of Obj Rep 525e1
Coll of Obj Rep
Coll of Obj Rep
800da
800db
800dc
800dd
800de
800ca
800cb
93
125
540
530c

FIG. 29

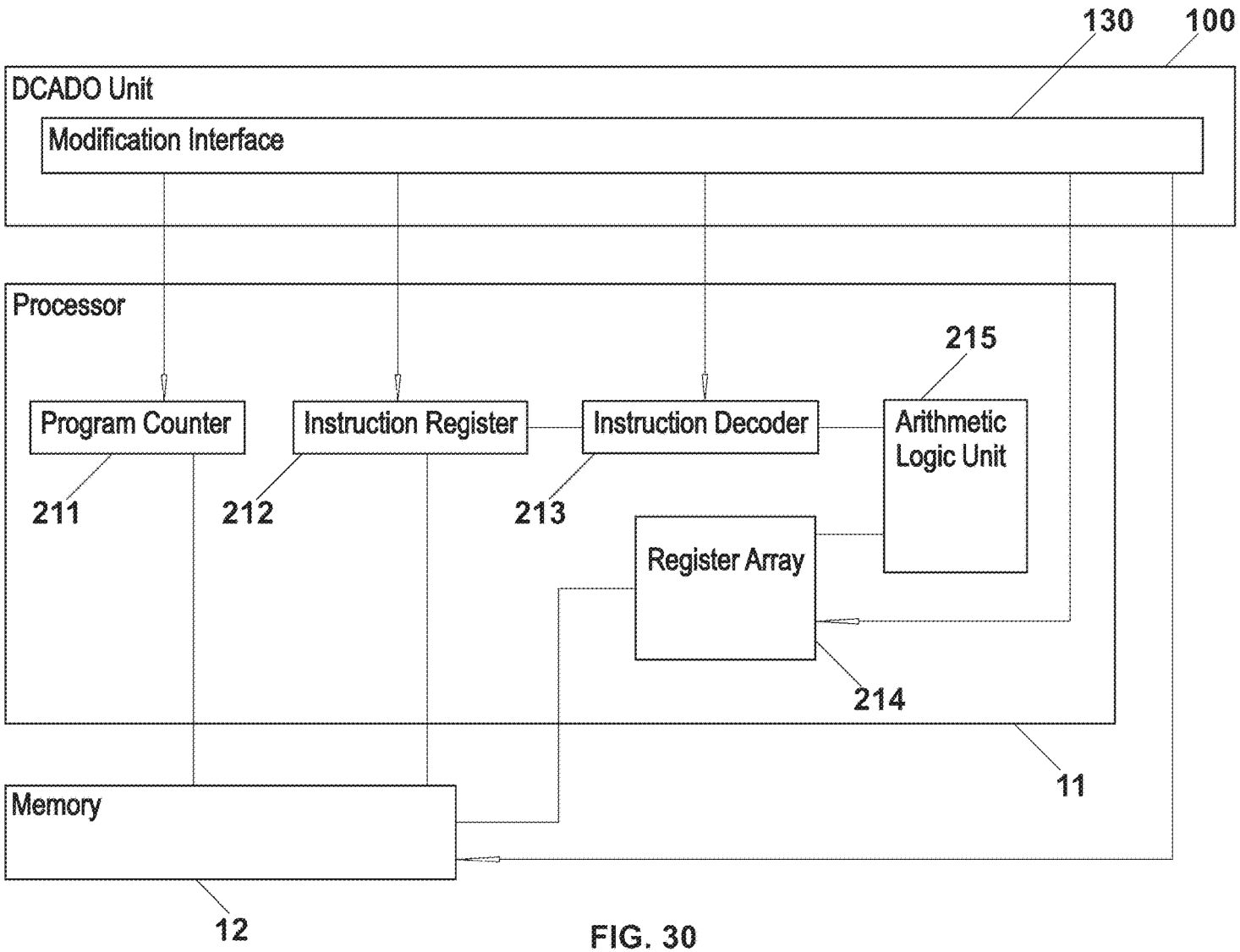
130
100
DCADO Unit
Modification Interface
Processor
215
Program Counter
Instruction Register
Instruction Decoder
Arithmetic Logic Unit
211
212
213
Register Array
214
11
Memory
12

FIG. 30

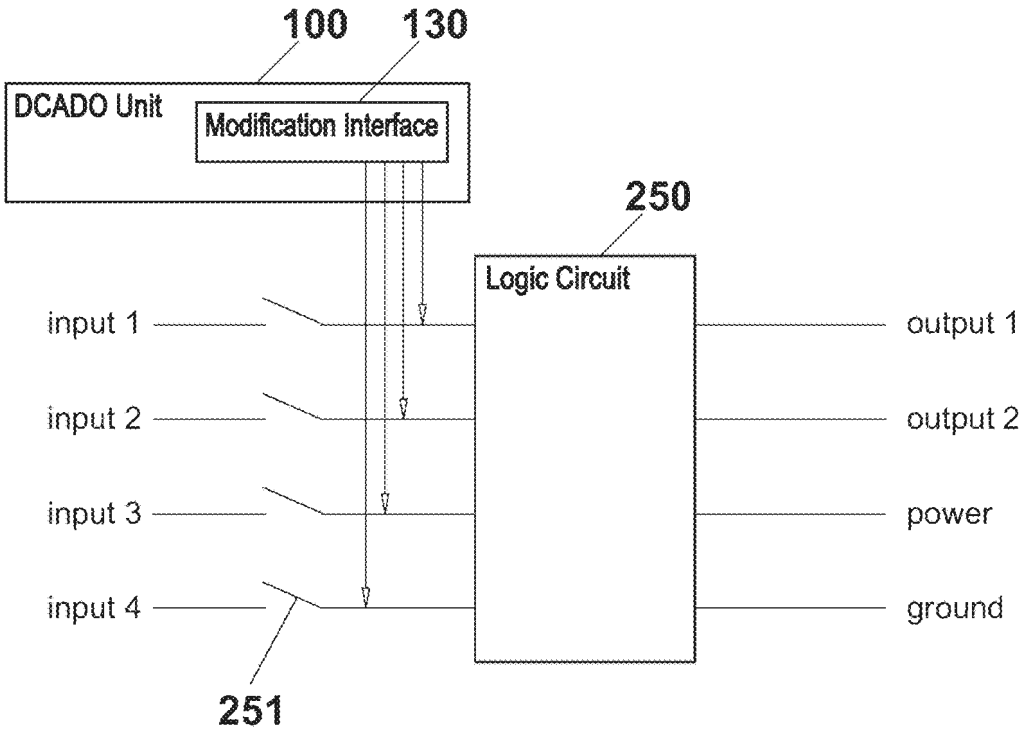

FIG. 31A

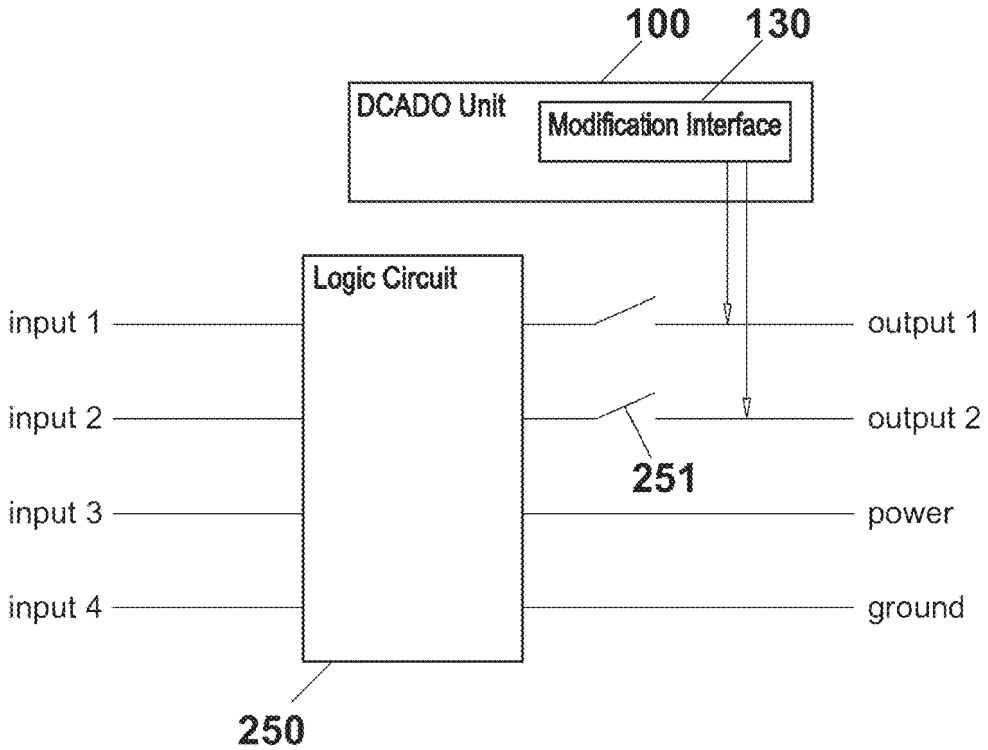

FIG. 31B

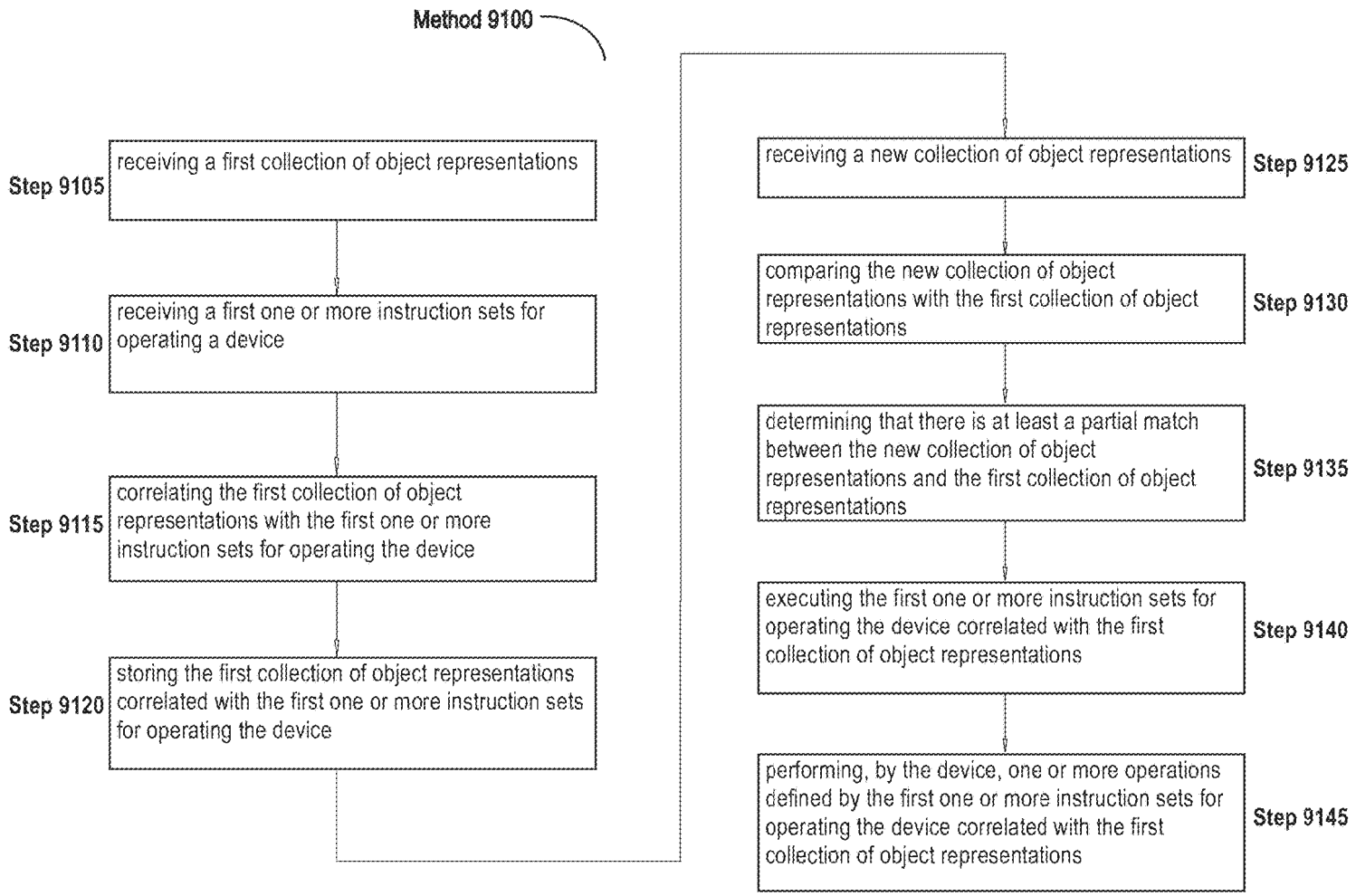
Method 9100
Step 9105
receiving a first collection of object representations
Step 9110
receiving a first one or more instruction sets for operating a device
Step 9115
correlating the first collection of object representations with the first one or more instruction sets for operating the device
Step 9120
storing the first collection of object representations correlated with the first one or more instruction sets for operating the device
Step 9125
receiving a new collection of object representations
Step 9130
comparing the new collection of object representations with the first collection of object representations
Step 9135
determining that there is at least a partial match between the new collection of object representations and the first collection of object representations
Step 9140
executing the first one or more instruction sets for operating the device correlated with the first collection of object representations
Step 9145
performing, by the device, one or more operations defined by the first one or more instruction sets for operating the device correlated with the first collection of object representations

FIG. 32

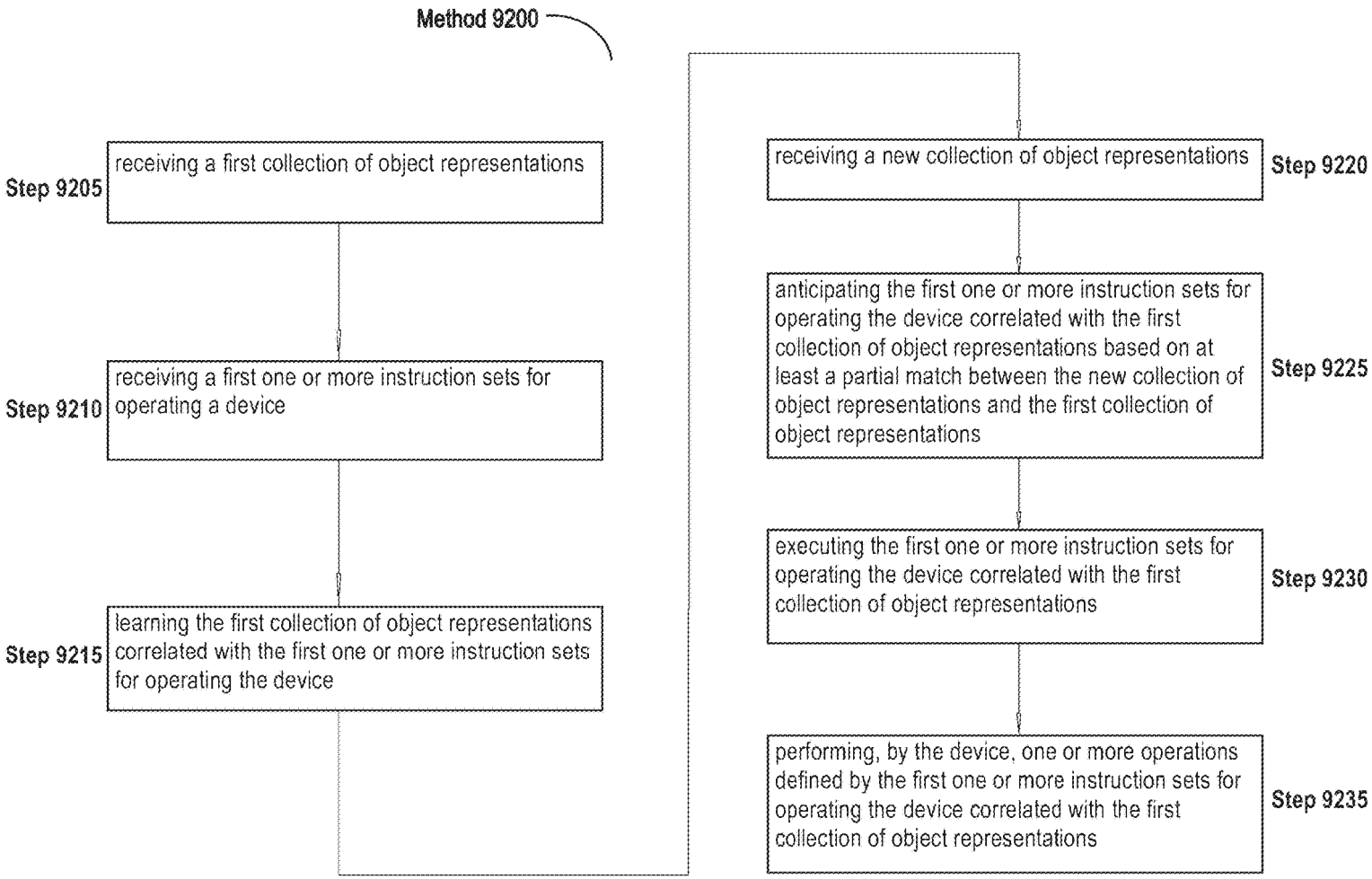
Method 9200
Step 9205
receiving a first collection of object representations
Step 9210
receiving a first one or more instruction sets for operating a device
Step 9215
learning the first collection of object representations correlated with the first one or more instruction sets for operating the device
Step 9220
receiving a new collection of object representations
Step 9225
anticipating the first one or more instruction sets for operating the device correlated with the first collection of object representations based on at least a partial match between the new collection of object representations and the first collection of object representations
Step 9230
executing the first one or more instruction sets for operating the device correlated with the first collection of object representations
Step 9235
performing, by the device, one or more operations defined by the first one or more instruction sets for operating the device correlated with the first collection of object representations

FIG. 33

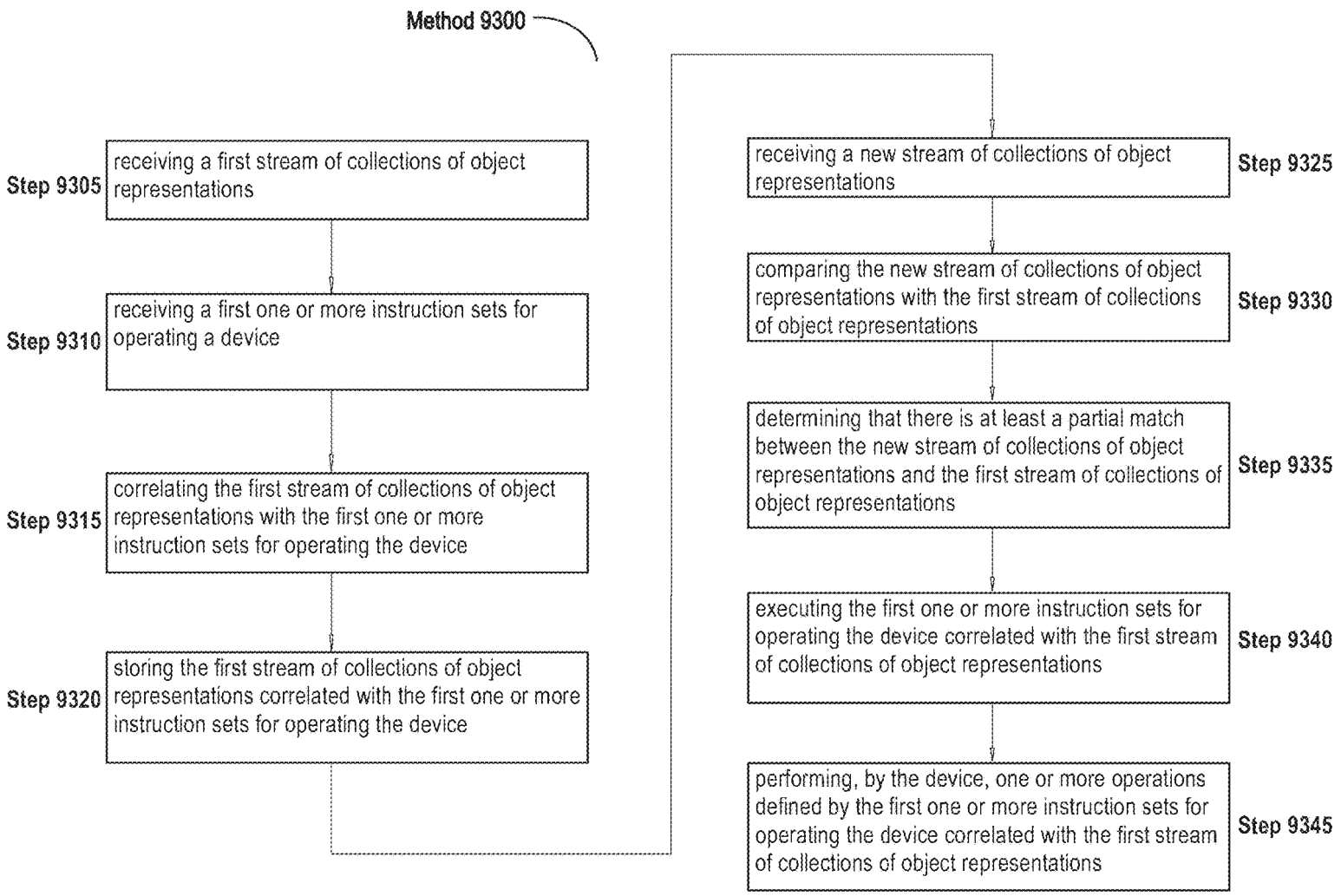
Method 9300
Step 9305
receiving a first stream of collections of object representations
Step 9310
receiving a first one or more instruction sets for operating a device
Step 9315
correlating the first stream of collections of object representations with the first one or more instruction sets for operating the device
Step 9320
storing the first stream of collections of object representations correlated with the first one or more instruction sets for operating the device
Step 9325
receiving a new stream of collections of object representations
Step 9330
comparing the new stream of collections of object representations with the first stream of collections of object representations
Step 9335
determining that there is at least a partial match between the new stream of collections of object representations and the first stream of collections of object representations
Step 9340
executing the first one or more instruction sets for operating the device correlated with the first stream of collections of object representations
Step 9345
performing, by the device, one or more operations defined by the first one or more instruction sets for operating the device correlated with the first stream of collections of object representations

FIG. 34

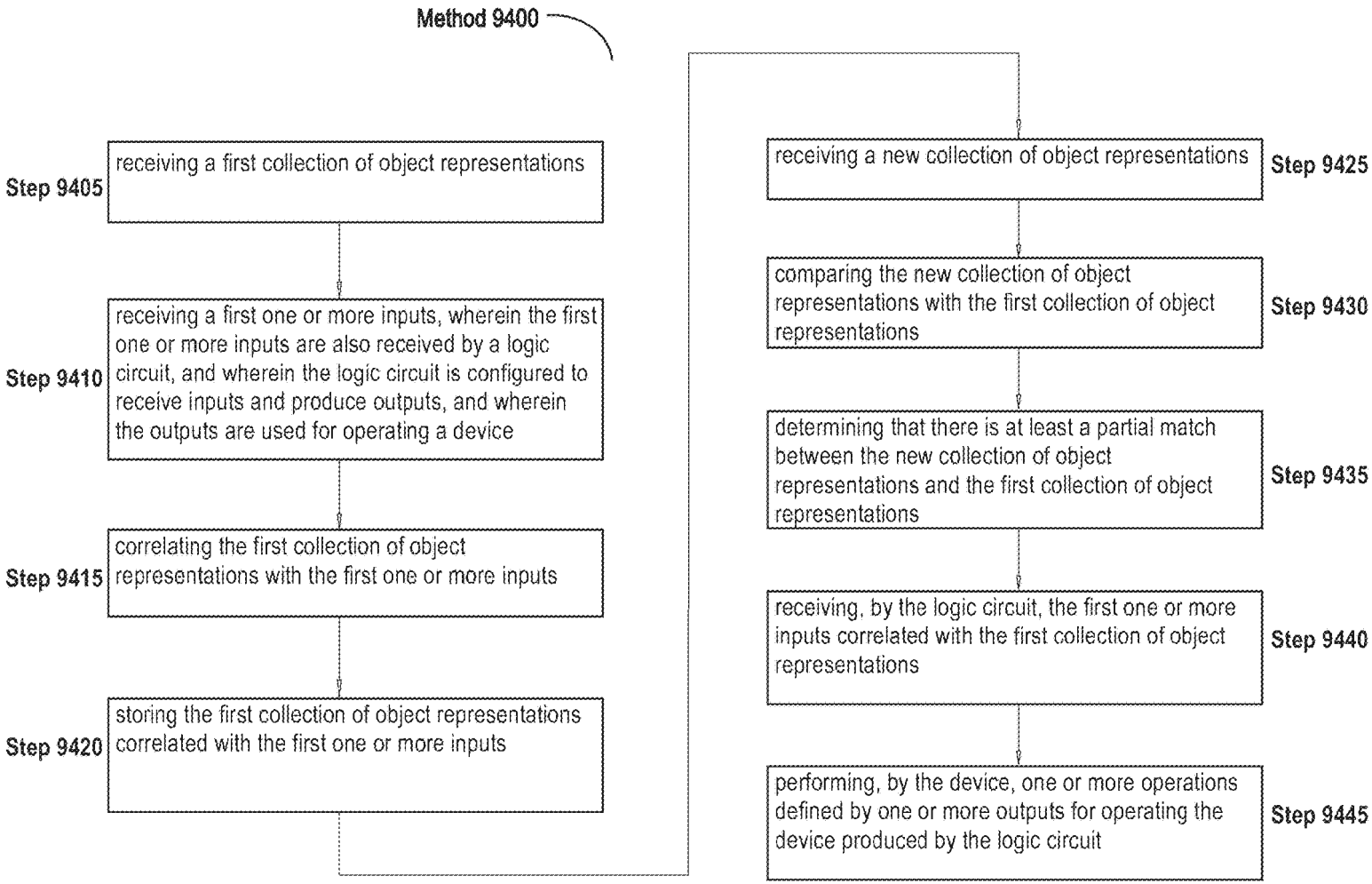
Method 9400
Step 9405
receiving a first collection of object representations
Step 9410
receiving a first one or more inputs, wherein the first one or more inputs are also received by a logic circuit, and wherein the logic circuit is configured to receive inputs and produce outputs, and wherein the outputs are used for operating a device
Step 9415
correlating the first collection of object representations with the first one or more inputs
Step 9420
storing the first collection of object representations correlated with the first one or more inputs
Step 9425
receiving a new collection of object representations
Step 9430
comparing the new collection of object representations with the first collection of object representations
Step 9435
determining that there is at least a partial match between the new collection of object representations and the first collection of object representations
Step 9440
receiving, by the logic circuit, the first one or more inputs correlated with the first collection of object representations
Step 9445
performing, by the device, one or more operations defined by one or more outputs for operating the device produced by the logic circuit

FIG. 35

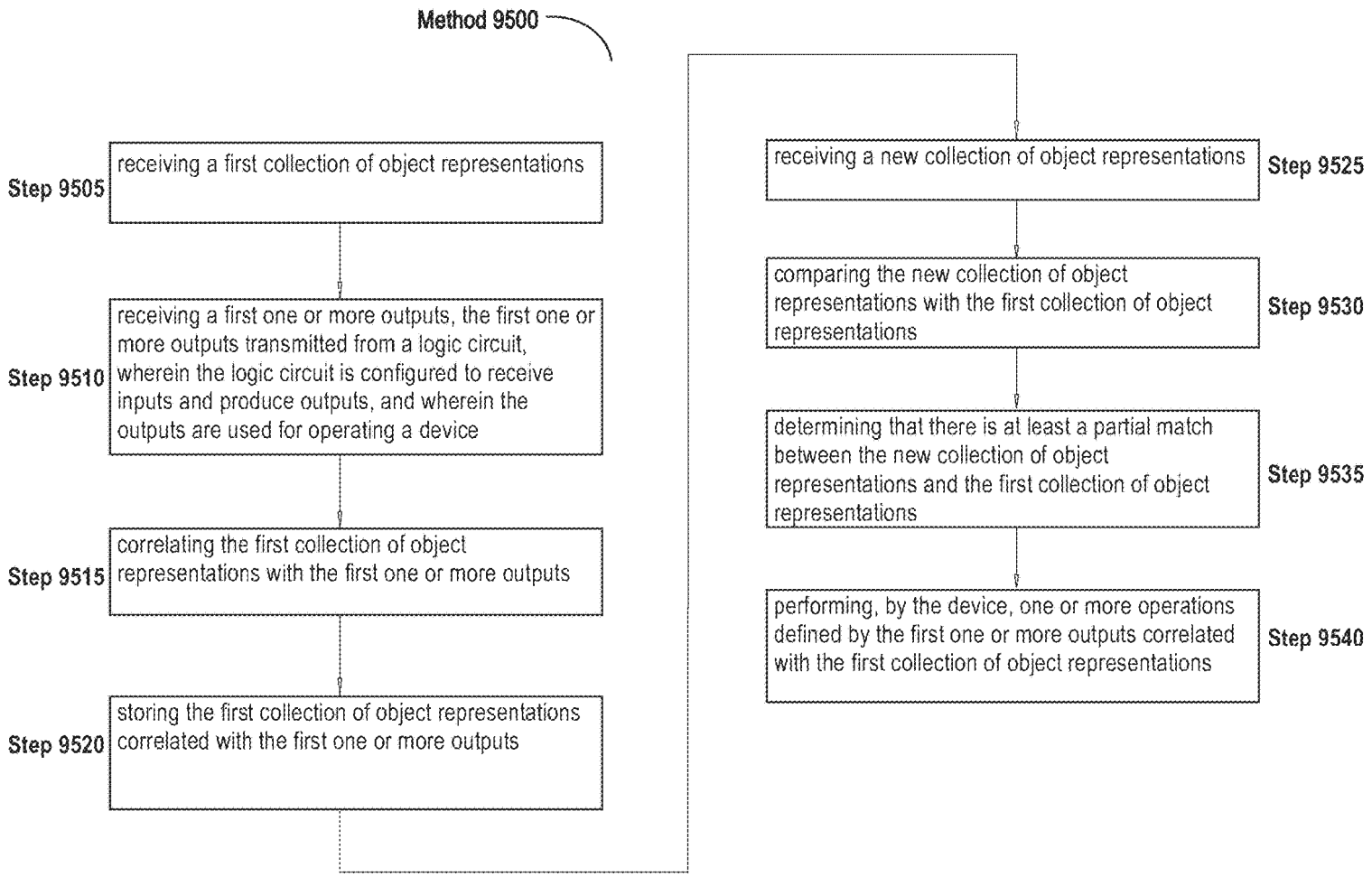
Method 9500
Step 9505
receiving a first collection of object representations
Step 9510
receiving a first one or more outputs, the first one or more outputs transmitted from a logic circuit, wherein the logic circuit is configured to receive inputs and produce outputs, and wherein the outputs are used for operating a device
Step 9515
correlating the first collection of object representations with the first one or more outputs
Step 9520
storing the first collection of object representations correlated with the first one or more outputs
Step 9525
receiving a new collection of object representations
Step 9530
comparing the new collection of object representations with the first collection of object representations
Step 9535
determining that there is at least a partial match between the new collection of object representations and the first collection of object representations
Step 9540
performing, by the device, one or more operations defined by the first one or more outputs correlated with the first collection of object representations

FIG. 36

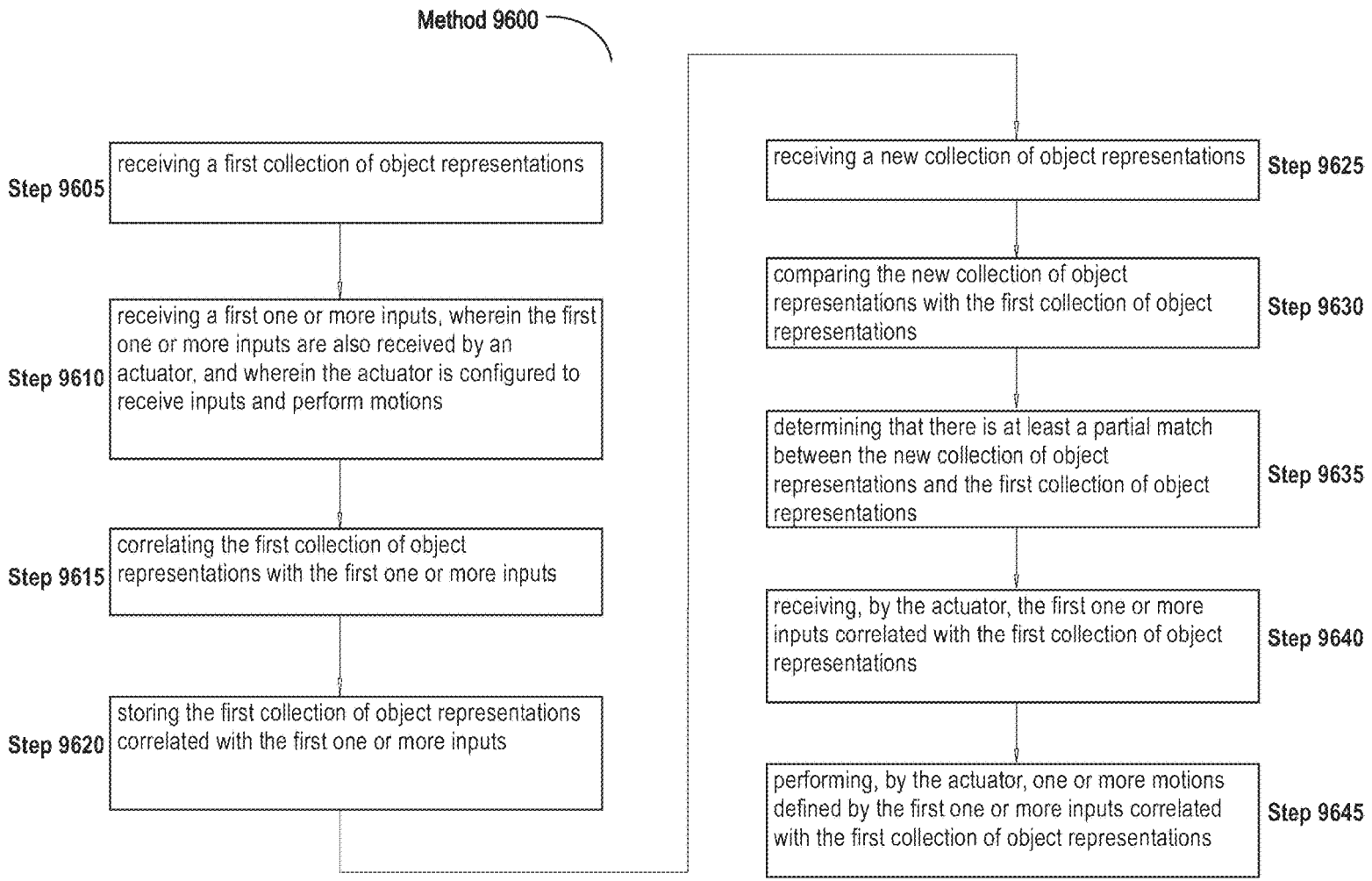
Method 9600
Step 9605
receiving a first collection of object representations
Step 9610
receiving a first one or more inputs, wherein the first one or more inputs are also received by an actuator, and wherein the actuator is configured to receive inputs and perform motions
Step 9615
correlating the first collection of object representations with the first one or more inputs
Step 9620
storing the first collection of object representations correlated with the first one or more inputs
Step 9625
receiving a new collection of object representations
Step 9630
comparing the new collection of object representations with the first collection of object representations
Step 9635
determining that there is at least a partial match between the new collection of object representations and the first collection of object representations
Step 9640
receiving, by the actuator, the first one or more inputs correlated with the first collection of object representations
Step 9645
performing, by the actuator, one or more motions defined by the first one or more inputs correlated with the first collection of object representations

FIG. 37

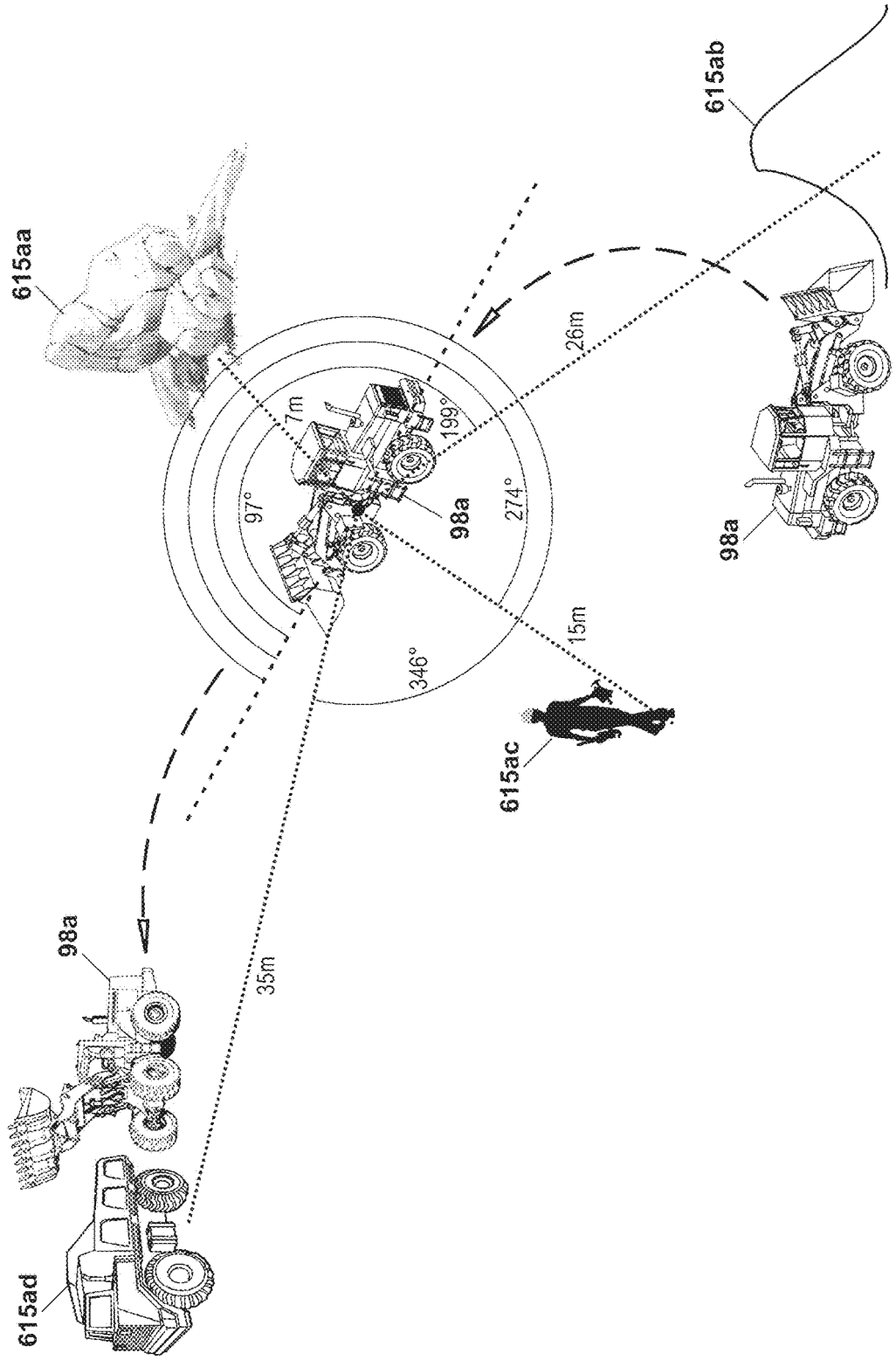
615aa
615ab
615ac
615ad
98a
98a
98a
7m
26m
15m
35m
97°
199°
274°
346°

FIG. 38

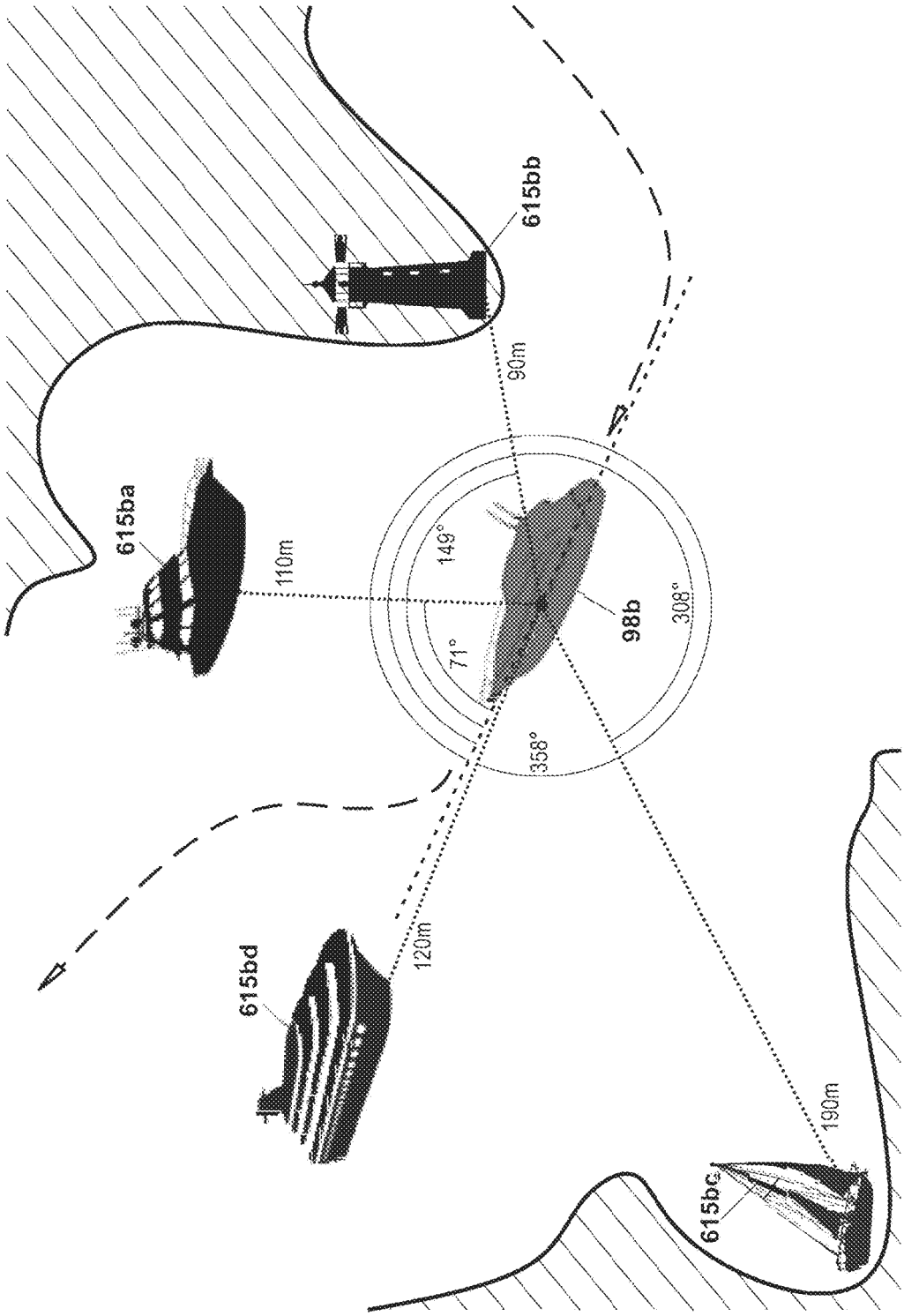

FIG. 39

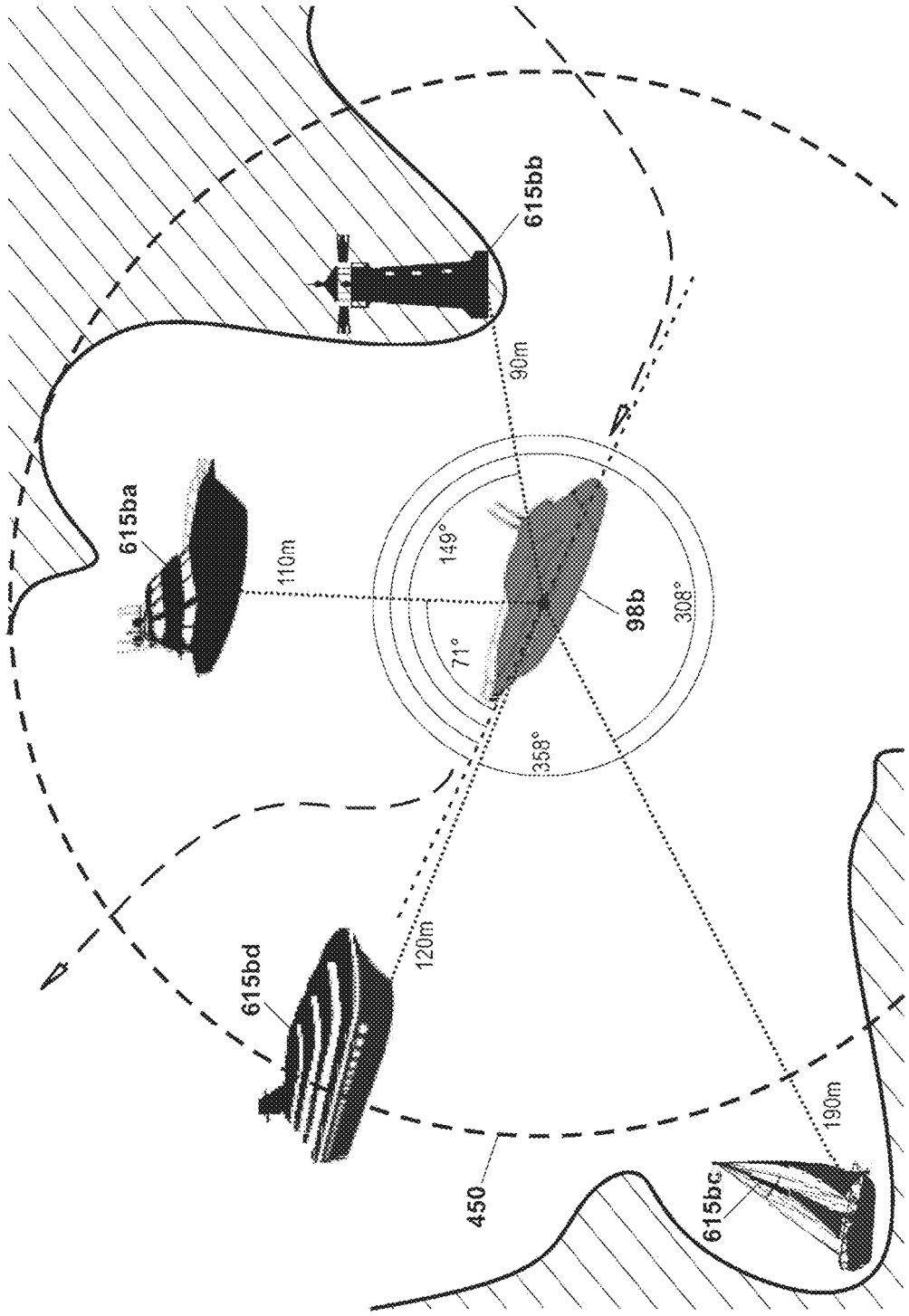
615bb
90m
615ba
110m
149°
71°
98b
308°
358°
615bd
120m
450
190m
615bc

FIG. 40

ARTIFICIALLY INTELLIGENT SYSTEMS, DEVICES, AND METHODS FOR LEARNING AND/OR USING A DEVICE'S CIRCUMSTANCES FOR AUTONOMOUS DEVICE OPERATION

FIELD

The disclosure generally relates to computing enabled devices and/or systems. The disclosure includes devices, apparatuses, systems, and related methods for providing advanced learning, anticipating, decision making, automation, and/or other functionalities.

COPYRIGHT NOTICE

A portion of the disclosure of this patent document contains material which is subject to copyright protection. The copyright owner has no objection to the facsimile reproduction by anyone of the patent document or the patent disclosure as it appears in the Patent and Trademark Office patent file or records, but otherwise reserves all copyright rights whatsoever.

BACKGROUND

Devices or systems commonly operate by receiving a user's operating directions in various circumstances. Instructions are then executed to effect the operation of a device or system based on user's operating directions. Hence, devices or systems rely on the user to direct their behaviors. Commonly employed device or system operating techniques lack a way to learn operation of a device or system and enable autonomous operation of a device or system.

SUMMARY

In some aspects, the disclosure relates to a system for learning and using a device's circumstances for autonomous device operating. The system may be implemented at least in part on one or more computing devices. In some embodiments, the system comprises a processor circuit configured to execute instruction sets for operating a device. The system may further include a memory unit configured to store data. The system may further include a sensor configured to detect objects. The system may further include an artificial intelligence unit. The artificial intelligence unit may be configured to: receive a first collection of object representations, the first collection of object representations including one or more representations of objects detected by the sensor. The artificial intelligence unit may be further configured to: receive a first one or more instruction sets for operating the device. The artificial intelligence unit may be further configured to learn the first collection of object representations correlated with the first one or more instruction sets for operating the device. The artificial intelligence unit may be further configured to: receive a new collection of object representations, the new collection of object representations including one or more representations of objects detected by the sensor. The artificial intelligence unit may be further configured to: anticipate the first one or more instruction sets for operating the device correlated with the first collection of object representations based on at least a partial match between the new collection of object representations and the first collection of object representations. The artificial intelligence unit may be further configured to: cause the processor circuit to execute the first one or more instruction sets for operating the device correlated with the first collection of object representations, the causing performed in response to the anticipating of the artificial intelligence unit, wherein the device performs one or more operations defined by the first one or more instruction sets for operating the device correlated with the first collection of object representations, the one or more operations performed in response to the executing by the processor circuit.

In some embodiments, at least one of: the processor circuit, the memory unit, the sensor, or the artificial intelligence unit are part of, operating on, or coupled to the device. In further embodiments, the device includes one or more devices. In further embodiments, the device includes a construction machine, an assembly machine, an object handling machine, an object dispensing machine, a sorting machine, a restocking machine, an industrial machine, an agricultural machine, a harvesting machine, an appliance, a toy, a robot, a ground vehicle, an aerial vehicle, an aquatic vehicle, a computer, a smartphone, a control device, or a computing enabled device. In further embodiments, the processor circuit includes one or more processor circuits. In further embodiments, the processor circuit includes a logic circuit. The logic circuit may include a microcontroller. The one or more instruction sets may include one or more inputs into or one or more outputs from the logic circuit.

In certain embodiments, the processor circuit includes a logic circuit, the instruction sets for operating the device include inputs into the logic circuit, and executing instruction sets for operating the device includes performing logic operations on the inputs into the logic circuit and producing outputs for operating the device. The logic circuit includes a microcontroller.

In some embodiments, the processor circuit includes a logic circuit, the instruction sets for operating the device include outputs from the logic circuit for operating the device, and executing instruction sets for operating the device includes performing logic operations on inputs into the logic circuit and producing the outputs from the logic circuit for operating the device.

In certain embodiments, the memory unit includes one or more memory units. In further embodiments, the memory unit resides on a remote computing device or a remote computing system, the remote computing device or the remote computing system coupled to the processor circuit via a network or an interface. The remote computing device or the remote computing system may include a server, a cloud, a computing device, or a computing system accessible over the network or the interface.

In some embodiments, the sensor includes one or more sensors. In further embodiments, the sensor includes a camera, a microphone, a lidar, a radar, a sonar, or a detector. In further embodiments, the sensor is part of a remote device. In further embodiments, the sensor is configured to detect objects in the device's surrounding.

In certain embodiments, the artificial intelligence unit is coupled to the sensor. In further embodiments, the artificial intelligence unit is coupled to the memory unit. In further embodiments, the artificial intelligence unit is part of, operating on, or coupled to the processor circuit. In further embodiments, the system further comprises: an additional processor circuit, wherein the artificial intelligence unit is part of, operating on, or coupled to the additional processor circuit. In further embodiments, the artificial intelligence unit is part of, operating on, or coupled to a remote computing device or a remote computing system, the remote computing device or the remote computing system coupled

to the processor circuit via a network or an interface. In further embodiments, the artificial intelligence unit includes a circuit, a computing apparatus, or a computing system attachable to the processor circuit. In further embodiments, the artificial intelligence unit includes a circuit, a computing apparatus, or a computing system attachable to the device. In further embodiments, the artificial intelligence unit is attachable to an application for operating the device, the application running on the processor circuit. In further embodiments, the artificial intelligence unit includes a circuit, a computing apparatus, or a computing system built into the processor circuit. In further embodiments, the artificial intelligence unit includes a circuit, a computing apparatus, or a computing system built into the device. In further embodiments, the artificial intelligence unit is built into an application for operating the device, the application running on the processor circuit. In further embodiments, the artificial intelligence unit is provided as a feature of the processor circuit. In further embodiments, the artificial intelligence unit is provided as a feature of an application running on the processor circuit. In further embodiments, the artificial intelligence unit is provided as a feature of the device. In further embodiments, the artificial intelligence unit is further configured to: take control from, share control with, or release control to the processor circuit. In further embodiments, the artificial intelligence unit is further configured to: take control from, share control with, or release control to an application or an object of the application, the application running on the processor circuit.

In some embodiments, the first collection of object representations includes one or more representations of objects detected by the sensor at a time. In further embodiments, the new collection of object representations includes one or more representations of objects detected by the sensor at a time. In further embodiments, the first collection of object representations includes a stream of collections of object representations. In further embodiments, the new collection of object representations includes a stream of collections of object representations. In further embodiments, the first or the new collection of object representations includes or is associated with a time stamp, an order, or a time related information. In further embodiments, the first or the new collection of object representations includes one or more representations of objects in the device's surrounding. In further embodiments, the first or the new collection of object representations includes one or more representations of objects in a remote device's surrounding. In further embodiments, an object representation of the one or more object representations includes one or more object properties. In further embodiments, the first or the new collection of object representations includes one or more object properties. In further embodiments, the first collection of object representations includes a comparative collection of object representations whose at least one portion can be used for comparisons with at least one portion of collections of object representations subsequent to the first collection of object representations, the collections of object representations subsequent to the first collection of object representations comprising the new collection of object representations. In further embodiments, the first collection of object representations includes a comparative collection of object representations that can be used for comparisons with the new collection of object representations. In further embodiments, the new collection of object representations includes an anticipatory collection of object representations whose correlated one or more instruction sets can be used for anticipation of one or more instruction sets to be executed by the processor circuit.

In certain embodiments, the first one or more instruction sets for operating the device include one or more instruction sets that temporally correspond to the first collection of object representations. In further embodiments, the one or more instruction sets that temporally correspond to the first collection of object representations include one or more instruction sets executed at a time of generating the first collection of object representations. In further embodiments, the one or more instruction sets that temporally correspond to the first collection of object representations include one or more instruction sets executed prior to generating the first collection of object representations. In further embodiments, the one or more instruction sets that temporally correspond to the first collection of object representations include one or more instruction sets executed within a threshold period of time prior to generating the first collection of object representations. In further embodiments, the one or more instruction sets that temporally correspond to the first collection of object representations include one or more instruction sets executed subsequent to generating the first collection of object representations. In further embodiments, the one or more instruction sets that temporally correspond to the first collection of object representations include one or more instruction sets executed within a threshold period of time subsequent to generating the first collection of object representations. In further embodiments, the one or more instruction sets that temporally correspond to the first collection of object representations include one or more instruction sets executed within a threshold period of time prior to generating the first collection of object representations or a threshold period of time subsequent to generating the first collection of object representations.

In some embodiments, the first one or more instruction sets for operating the device are executed by the processor circuit. In further embodiments, the first one or more instruction sets for operating the device are part of an application for operating the device, the application running on the processor circuit. In further embodiments, the first one or more instruction sets for operating the device include one or more inputs into or one or more outputs from the processor circuit. In further embodiments, the first one or more instruction sets for operating the device include values or states of one or more registers or elements of the processor circuit. In further embodiments, the first one or more instruction sets for operating the device include at least one of: a command, a keyword, a symbol, an instruction, an operator, a variable, a value, an object, a data structure, a function, a parameter, a state, a signal, an input, an output, a character, a digit, or a reference thereto. In further embodiments, the first one or more instruction sets for operating the device include a source code, a bytecode, an intermediate code, a compiled code, an interpreted code, a translated code, a runtime code, an assembly code, a structured query language (SQL) code, or a machine code. In further embodiments, the first one or more instruction sets for operating the device include one or more code segments, lines of code, statements, instructions, functions, routines, subroutines, or basic blocks. In further embodiments, the processor circuit includes a logic circuit. The first one or more instruction sets for operating the device may include one or more inputs into a logic circuit. The first one or more instruction sets for operating the device may include one or more outputs from a logic circuit.

In certain embodiments, the first one or more instruction sets for operating the device include one or more instruction

sets for operating an application or an object of the application, the application running on the processor circuit. In further embodiments, the receiving the first one or more instruction sets for operating the device includes obtaining the first one or more instruction sets for operating the device from the processor circuit. In further embodiments, the receiving the first one or more instruction sets for operating the device includes receiving the first one or more instruction sets for operating the device as they are executed by the processor circuit. In further embodiments, the receiving the first one or more instruction sets for operating the device includes receiving the first one or more instruction sets for operating the device from a register or an element of the processor circuit. In further embodiments, the receiving the first one or more instruction sets for operating the device includes receiving the first one or more instruction sets for operating the device from an element that is part of, operating on, or coupled to the processor circuit. In further embodiments, the receiving the first one or more instruction sets for operating the device includes receiving the first one or more instruction sets for operating the device from at least one of: the memory unit, the device, a virtual machine, a runtime engine, a hard drive, a storage device, a peripheral device, a network connected device, or a user. In further embodiments, the receiving the first one or more instruction sets for operating the device includes receiving the first one or more instruction sets for operating the device from a plurality of processor circuits, applications, memory units, devices, virtual machines, runtime engines, hard drives, storage devices, peripheral devices, network connected devices, or users.

In some embodiments, the processor circuit includes a logic circuit, and wherein the receiving the first one or more instruction sets for operating the device includes receiving the first one or more instruction sets for operating the device from the logic circuit. In further embodiments, the logic circuit includes a microcontroller. In further embodiments, the receiving the first one or more instruction sets for operating the device from the logic circuit includes receiving the first one or more instruction sets for operating the device from an element of the logic circuit. In further embodiments, the receiving the first one or more instruction sets for operating the device from the logic circuit includes receiving one or more inputs into the logic circuit. In further embodiments, the receiving the first one or more instruction sets for operating the device from the logic circuit includes receiving one or more outputs from the logic circuit.

In certain embodiments, the receiving the first one or more instruction sets for operating the device includes receiving the first one or more instruction sets for operating the device from an application for operating the device, the application running on the processor circuit.

In some embodiments, the system further comprises: an application including instruction sets for operating the device, the application running on the processor circuit, wherein the receiving the first one or more instruction sets for operating the device includes receiving the first one or more instruction sets for operating the device from the application.

In certain embodiments, the receiving the first one or more instruction sets for operating the device includes receiving the one or more instruction sets at a source code write time, a compile time, an interpretation time, a translation time, a linking time, a loading time, or a runtime. In further embodiments, the receiving the first one or more instruction sets for operating the device includes at least one of: tracing, profiling, or instrumentation of a source code, a bytecode, an intermediate code, a compiled code, an interpreted code, a translated code, a runtime code, an assembly code, a structured query language (SQL) code, or a machine code. In further embodiments, the receiving the first one or more instruction sets for operating the device includes at least one of: tracing, profiling, or instrumentation of an element that is part of, operating on, or coupled to the processor circuit. In further embodiments, the receiving the first one or more instruction sets for operating the device includes at least one of: tracing, profiling, or instrumentation of a register of the processor circuit, the memory unit, a storage, or a repository where the first one or more instruction sets for operating the device are stored. In further embodiments, the receiving the first one or more instruction sets for operating the device includes at least one of: tracing, profiling, or instrumentation of the processor circuit, the device, a virtual machine, a runtime engine, an operating system, an execution stack, a program counter, or a processing element. In further embodiments, the receiving the first one or more instruction sets for operating the device includes at least one of: tracing, profiling, or instrumentation of the processor circuit or tracing, profiling, or instrumentation of a component of the processor circuit. In further embodiments, the receiving the first one or more instruction sets for operating the device includes at least one of: tracing, profiling, or instrumentation of an application or an object of the application, the application running on the processor circuit. In further embodiments, the receiving the first one or more instruction sets for operating the device includes at least one of: tracing, profiling, or instrumentation at a source code write time, a compile time, an interpretation time, a translation time, a linking time, a loading time, or a runtime. In further embodiments, the receiving the first one or more instruction sets for operating the device includes at least one of: tracing, profiling, or instrumentation of one or more of code segments, lines of code, statements, instructions, functions, routines, subroutines, or basic blocks. In further embodiments, the receiving the first one or more instruction sets for operating the device includes at least one of: tracing, profiling, or instrumentation of a user input. In further embodiments, the receiving the first one or more instruction sets for operating the device includes at least one of: a manual, an automatic, a dynamic, or a just in time (JIT) tracing, profiling, or instrumentation. In further embodiments, the receiving the first one or more instruction sets for operating the device includes utilizing at least one of: a .NET tool, a .NET application programming interface (API), a Java tool, a Java API, a logging tool, or an independent tool for obtaining instruction sets. In further embodiments, the receiving the first one or more instruction sets for operating the device includes utilizing an assembly language. In further embodiments, the receiving the first one or more instruction sets for operating the device includes utilizing a branch or a jump. In further embodiments, the receiving the first one or more instruction sets for operating the device includes a branch tracing or a simulation tracing.

In further embodiments, the system further comprises: an interface configured to receive instruction sets, wherein the first one or more instruction sets for operating the device are received by the interface. The interface may include an acquisition interface.

In some embodiments, the first collection of object representations correlated with the first one or more instruction sets for operating the device include a knowledge of how the device operated in a circumstance. In further embodiments, the first collection of object representations correlated with the first one or more instruction sets for operating the device

are included in a neuron, a node, a vertex, or an element of a knowledgebase. In further embodiments, the knowledgebase includes a neural network, a graph, a collection of sequences, a sequence, a collection of knowledge cells, a knowledge structure, or a data structure. In further embodiments, some of the neurons, nodes, vertices, or elements are interconnected. In further embodiments, the first collection of object representations correlated with the first one or more instruction sets for operating the device are structured into a knowledge cell. In further embodiments, the knowledge cell is included in a neuron, a node, a vertex, or an element of a knowledgebase. The knowledgebase may include a neural network, a graph, a collection of sequences, a sequence, a collection of knowledge cells, a knowledge structure, or a data structure. Some of the neurons, nodes, vertices, or elements may be interconnected. In further embodiments, the learning the first collection of object representations correlated with the first one or more instruction sets for operating the device includes correlating the first collection of object representations with the first one or more instruction sets for operating the device. In further embodiments, the correlating the first collection of object representations with the first one or more instruction sets for operating the device includes generating a knowledge cell, the knowledge cell comprising the first collection of object representations correlated with the first one or more instruction sets for operating the device. In further embodiments, the correlating the first collection of object representations with the first one or more instruction sets for operating the device includes structuring a knowledge of how the device operated in a circumstance. In further embodiments, the learning the first collection of object representations correlated with the first one or more instruction sets for operating the device includes learning a user's knowledge, style, or methodology of operating the device in a circumstance.

In certain embodiments, the learning the first collection of object representations correlated with the first one or more instruction sets for operating the device includes storing the first collection of object representations correlated with the first one or more instruction sets for operating the device into the memory unit, the first collection of object representations correlated with the first one or more instruction sets for operating the device being part of a plurality of collections of object representations correlated with one or more instruction sets for operating the device stored in the memory unit. In further embodiments, the plurality of collections of object representations correlated with one or more instruction sets for operating the device include a neural network, a graph, a collection of sequences, a sequence, a collection of knowledge cells, a knowledgebase, a knowledge structure, or a data structure. In further embodiments, the plurality of collections of object representations correlated with one or more instruction sets for operating the device are organized into a neural network, a graph, a collection of sequences, a sequence, a collection of knowledge cells, a knowledgebase, a knowledge structure, or a data structure. In further embodiments, each of the plurality of collections of object representations correlated with one or more instruction sets for operating the device is included in a neuron, a node, a vertex, or an element of a knowledgebase. The knowledgebase may include a neural network, a graph, a collection of sequences, a sequence, a collection of knowledge cells, a knowledge structure, or a data structure. Some of the neurons, nodes, vertices, or elements may be interconnected. In further embodiments, the plurality of collections of object representations correlated with one or more instruction sets for operating the device include a user's knowledge, style, or methodology of operating the device in circumstances. In further embodiments, the plurality of collections of object representations correlated with one or more instruction sets for operating the device are stored on a remote computing device or a remote computing system. In further embodiments, the plurality of collections of object representations correlated with one or more instruction sets for operating the device include an artificial intelligence system for knowledge structuring, storing, or representation. The artificial intelligence system for knowledge structuring, storing, or representation may include at least one of: a deep learning system, a supervised learning system, an unsupervised learning system, a neural network, a search-based system, an optimization-based system, a logic-based system, a fuzzy logic-based system, a tree-based system, a graph-based system, a hierarchical system, a symbolic system, a sub-symbolic system, an evolutionary system, a genetic system, a multi-agent system, a deterministic system, a probabilistic system, or a statistical system.

In some embodiments, the anticipating the first one or more instruction sets for operating the device correlated with the first collection of object representations based on at least a partial match between the new collection of object representations and the first collection of object representations includes comparing at least one portion of the new collection of object representations with at least one portion of the first collection of object representations. In further embodiments, the at least one portion of the new collection of object representations include at least one object representation or at least one object property of the new collection of object representations. In further embodiments, the at least one portion of the first collection of object representations include at least one object representation or at least one object property of the first collection of object representations. In further embodiments, the anticipating the first one or more instruction sets for operating the device correlated with the first collection of object representations based on at least a partial match between the new collection of object representations and the first collection of object representations includes comparing at least one object representation from the new collection of object representations with at least one object representation from the first collection of object representations. In further embodiments, the comparing at least one object representation from the new collection of object representations with at least one object representation from the first collection of object representations includes comparing at least one object property of the at least one object representation from the new collection of object representations with at least one object property of the at least one object representation from the first collection of object representations.

In certain embodiments, the anticipating the first one or more instruction sets for operating the device correlated with the first collection of object representations based on at least a partial match between the new collection of object representations and the first collection of object representations includes determining that there is at least a partial match between the new collection of object representations and the first collection of object representations. In further embodiments, the determining that there is at least a partial match between the new collection of object representations and the first collection of object representations includes determining that there is at least a partial match between one or more portions of the new collection of object representations and one or more portions of the first collection of object representations. In further embodiments, the determining that

there is at least a partial match between the new collection of object representations and the first collection of object representations includes determining that a similarity between at least one portion of the new collection of object representations and at least one portion of the first collection of object representations exceeds a similarity threshold. In further embodiments, the determining that there is at least a partial match between the new collection of object representations and the first collection of object representations includes determining a substantial similarity between at least one portion of the new collection of object representations and at least one portion of the first collection of object representations. The substantial similarity may be achieved when a similarity between the at least one portion of the new collection of object representations and the at least one portion of the first collection of object representations exceeds a similarity threshold. The substantial similarity may be achieved when a number or a percentage of matching or partially matching portions of the new collection of object representations and portions of the first collection of object representations exceeds a threshold number or threshold percentage. In further embodiments, the determining that there is at least a partial match between the new collection of object representations and the first collection of object representations includes determining that a number or a percentage of matching or partially matching object representations from the new collection of object representations and from the first collection of object representations exceeds a threshold number or threshold percentage. The matching or partially matching object representations from the new collection of object representations and from the first collection of object representations may be determined factoring in at least one of a type of an object representation, an importance of an object representation, a threshold for a similarity in an object representation, or a threshold for a difference in an object representation. In further embodiments, the determining that there is at least a partial match between the new collection of object representations and the first collection of object representations includes determining that a number or a percentage of matching or partially matching object properties from the new collection of object representations and from the first collection of object representations exceeds a threshold number or threshold percentage. The matching or partially matching object properties from the new collection of object representations and from the first collection of object representations may be determined factoring in at least one of: an association of an object property with an object representation, a category of an object property, an importance of an object property, a threshold for a similarity in an object property, or a threshold for a difference in an object property. In further embodiments, the determining that there is at least a partial match between the new collection of object representations and the first collection of object representations includes determining that there is at least a partial match between at least one object representation from the new collection of object representations and at least one object representation from the first collection of object representations. The determining that there is at least a partial match between at least one object representation from the new collection of object representations and at least one object representation from the first collection of object representations includes determining that there is at least a partial match between at least one object property of the at least one object representation from the new collection of object representations and at least one object property of the at least one object representation from the first collection of object representations.

In certain embodiments, the causing the processor circuit to execute the first one or more instruction sets for operating the device correlated with the first collection of object representations includes causing the processor circuit to execute the first one or more instruction sets for operating the device correlated with the first collection of object representations instead of or prior to an instruction set that would have been executed next. In further embodiments, the causing the processor circuit to execute the first one or more instruction sets for operating the device correlated with the first collection of object representations includes modifying one or more instruction sets of the processor circuit. In further embodiments, the causing the processor circuit to execute the first one or more instruction sets for operating the device correlated with the first collection of object representations includes modifying a register or an element of the processor circuit. In further embodiments, the causing the processor circuit to execute the first one or more instruction sets for operating the device correlated with the first collection of object representations includes inserting the first one or more instruction sets for operating the device correlated with the first collection of object representations into a register or an element of the processor circuit. In further embodiments, the causing the processor circuit to execute the first one or more instruction sets for operating the device correlated with the first collection of object representations includes redirecting the processor circuit to the first one or more instruction sets for operating the device correlated with the first collection of object representations. In further embodiments, the causing the processor circuit to execute the first one or more instruction sets for operating the device correlated with the first collection of object representations includes redirecting the processor circuit to one or more alternate instruction sets, the alternate instruction sets comprising the first one or more instruction sets for operating the device correlated with the first collection of object representations. In further embodiments, the causing the processor circuit to execute the first one or more instruction sets for operating the device correlated with the first collection of object representations includes transmitting, to the processor circuit for execution, the first one or more instruction sets for operating the device correlated with the first collection of object representations. In further embodiments, the executing the first one or more instruction sets for operating the device correlated with the first collection of object representations includes issuing an interrupt to the processor circuit and executing the first one or more instruction sets for operating the device correlated with the first collection of object representations following the interrupt. In further embodiments, the causing the processor circuit to execute the first one or more instruction sets for operating the device correlated with the first collection of object representations includes modifying an element that is part of, operating on, or coupled to the processor circuit.

In some embodiments, the processor circuit includes a logic circuit, and wherein the causing the processor circuit to execute the first one or more instruction sets for operating the device correlated with the first collection of object representations includes causing the logic circuit to execute the first one or more instruction sets for operating the device correlated with the first collection of object representations. In further embodiments, the logic circuit includes a microcontroller. In further embodiments, the causing the logic circuit to execute the first one or more instruction sets for operating the device correlated with the first collection of object representations includes modifying an element of the logic circuit. In further embodiments, the causing the logic

circuit to execute the first one or more instruction sets for operating the device correlated with the first collection of object representations includes inserting the first one or more instruction sets for operating the device correlated with the first collection of object representations into an element of the logic circuit. In further embodiments, the causing the logic circuit to execute the first one or more instruction sets for operating the device correlated with the first collection of object representations includes redirecting the logic circuit to the first one or more instruction sets for operating the device correlated with the first collection of object representations. In further embodiments, the causing the logic circuit to execute the first one or more instruction sets for operating the device correlated with the first collection of object representations includes replacing inputs into the logic circuit with the first one or more instruction sets for operating the device correlated with the first collection of object representations. In further embodiments, the causing the logic circuit to execute the first one or more instruction sets for operating the device correlated with the first collection of object representations includes replacing outputs from the logic circuit with the first one or more instruction sets for operating the device correlated with the first collection of object representations.

In certain embodiments, the causing the processor circuit to execute the first one or more instruction sets for operating the device correlated with the first collection of object representations includes causing an application for operating the device to execute the first one or more instruction sets for operating the device correlated with the first collection of object representations, the application running on the processor circuit.

In some embodiments, the system further comprises: an application including instruction sets for operating the device, the application running on the processor circuit, wherein the causing the processor circuit to execute the first one or more instruction sets for operating the device correlated with the first collection of object representations includes modifying the application.

In further embodiments, the causing the processor circuit to execute the first one or more instruction sets for operating the device correlated with the first collection of object representations includes redirecting an application to the first one or more instruction sets for operating the device correlated with the first collection of object representations, the application running on the processor circuit. In further embodiments, the causing the processor circuit to execute the first one or more instruction sets for operating the device correlated with the first collection of object representations includes redirecting an application to one or more alternate instruction sets, the application running on the processor circuit, the alternate instruction sets comprising the first one or more instruction sets for operating the device correlated with the first collection of object representations. In further embodiments, the causing the processor circuit to execute the first one or more instruction sets for operating the device correlated with the first collection of object representations includes modifying one or more instruction sets of an application, the application running on the processor circuit. In further embodiments, the causing the processor circuit to execute the first one or more instruction sets for operating the device correlated with the first collection of object representations includes modifying a source code, a bytecode, an intermediate code, a compiled code, an interpreted code, a translated code, a runtime code, an assembly code, or a machine code. In further embodiments, the causing the processor circuit to execute the first one or more instruction sets for operating the device correlated with the first collection of object representations includes modifying at least one of: the memory unit, a register of the processor circuit, a storage, or a repository where instruction sets are stored or used. In further embodiments, the causing the processor circuit to execute the first one or more instruction sets for operating the device correlated with the first collection of object representations includes modifying one or more instruction sets for operating an application or an object of the application, the application running on the processor circuit. In further embodiments, the causing the processor circuit to execute the first one or more instruction sets for operating the device correlated with the first collection of object representations includes modifying at least one of: an element of the processor circuit, an element of the device, a virtual machine, a runtime engine, an operating system, an execution stack, a program counter, or a user input. In further embodiments, the causing the processor circuit to execute the first one or more instruction sets for operating the device correlated with the first collection of object representations includes modifying one or more instruction sets at a source code write time, a compile time, an interpretation time, a translation time, a linking time, a loading time, or a runtime. In further embodiments, the causing the processor circuit to execute the first one or more instruction sets for operating the device correlated with the first collection of object representations includes modifying one or more code segments, lines of code, statements, instructions, functions, routines, subroutines, or basic blocks. In further embodiments, the causing the processor circuit to execute the first one or more instruction sets for operating the device correlated with the first collection of object representations includes a manual, an automatic, a dynamic, or a just in time (JIT) instrumentation of an application, the application running on the processor circuit. In further embodiments, the causing the processor circuit to execute the first one or more instruction sets for operating the device correlated with the first collection of object representations includes utilizing one or more of a .NET tool, a .NET application programming interface (API), a Java tool, a Java API, an operating system tool, or an independent tool for modifying instruction sets. In further embodiments, the causing the processor circuit to execute the first one or more instruction sets for operating the device correlated with the first collection of object representations includes utilizing at least one of: a dynamic, an interpreted, or a scripting programming language. In further embodiments, the causing the processor circuit to execute the first one or more instruction sets for operating the device correlated with the first collection of object representations includes utilizing at least one of: a dynamic code, a dynamic class loading, or a reflection. In further embodiments, the causing the processor circuit to execute the first one or more instruction sets for operating the device correlated with the first collection of object representations includes utilizing an assembly language. In further embodiments, the causing the processor circuit to execute the first one or more instruction sets for operating the device correlated with the first collection of object representations includes utilizing at least one of: a metaprogramming, a self-modifying code, or an instruction set modification tool. In further embodiments, the causing the processor circuit to execute the first one or more instruction sets for operating the device correlated with the first collection of object representations includes utilizing at least one of: just in time (JIT) compiling, JIT interpretation, JIT translation, dynamic recompiling, or binary rewriting. In further embodiments, the causing the processor circuit to

execute the first one or more instruction sets for operating the device correlated with the first collection of object representations includes utilizing at least one of: a dynamic expression creation, a dynamic expression execution, a dynamic function creation, or a dynamic function execution. In further embodiments, the causing the processor circuit to execute the first one or more instruction sets for operating the device correlated with the first collection of object representations includes adding or inserting additional code into a code of an application, the application running on the processor circuit. In further embodiments, the causing the processor circuit to execute the first one or more instruction sets for operating the device correlated with the first collection of object representations includes at least one of: modifying, removing, rewriting, or overwriting a code of an application, the application running on the processor circuit. In further embodiments, the causing the processor circuit to execute the first one or more instruction sets for operating the device correlated with the first collection of object representations includes at least one of: branching, redirecting, extending, or hot swapping a code of an application, the application running on the processor circuit. The branching or redirecting the code may include inserting at least one of: a branch, a jump, or a means for redirecting an execution. In further embodiments, the executing the first one or more instruction sets for operating the device correlated with the first collection of object representations includes implementing a user's knowledge, style, or methodology of operating the device in a circumstance.

In certain embodiments, the system further comprises: an interface configured to cause execution of instruction sets, wherein the executing the first one or more instruction sets for operating the device correlated with the first collection of object representations is caused by the interface. The interface may include a modification interface.

In some embodiments, the one or more operations defined by the first one or more instruction sets for operating the device correlated with the first collection of object representations include one or more operations with or by a computing enabled device. In further embodiments, the performing the one or more operations defined by the first one or more instruction sets for operating the device correlated with the first collection of object representations includes implementing a user's knowledge, style, or methodology of operating the device in a circumstance.

In certain embodiments, the system further comprising: an application running on the processor circuit.

In some embodiments, the instruction sets for operating the device are part of an application for operating the device, the application running on the processor circuit.

In certain embodiments, the system of further comprises: an application for operating the device, the application running on the processor circuit. The application for operating the device may include the instruction sets for operating the device.

In some embodiments, the artificial intelligence unit is further configured to: receive at least one extra information. In further embodiments, the at least one extra information include one or more of: a time information, a location information, a computed information, or a contextual information. In further embodiments, the at least one extra information include one or more of: an information on an object, an information on an object representation, an information on a collection of object representations, an information on a device's circumstance, an information on an instruction set, an information on an application, an information on the processor circuit, an information on the device, or an information on an user. In further embodiments, the artificial intelligence unit is further configured to: learn the first collection of object representations correlated with the at least one extra information. The learning the first collection of object representations correlated with at least one extra information may include correlating the first collection of object representations with the at least one extra information. The learning the first collection of object representations correlated with at least one extra information may include storing the first collection of object representations correlated with the at least one extra information into the memory unit. In further embodiments, the anticipating the first one or more instruction sets for operating the device correlated with the first collection of object representations based on at least a partial match between the new collection of object representations and the first collection of object representations includes anticipating the first one or more instruction sets for operating the device correlated with the first collection of object representations based on at least a partial match between an extra information correlated with the new collection of object representations and an extra information correlated with the first collection of object representations. The anticipating the first one or more instruction sets for operating the device correlated with the first collection of object representations based on at least a partial match between an extra information correlated with the new collection of object representations and an extra information correlated with the first collection of object representations may include comparing an extra information correlated with the new collection of object representations and an extra information correlated with the first collection of object representations. The anticipating the first one or more instruction sets for operating the device correlated with the first collection of object representations based on at least a partial match between an extra information correlated with the new collection of object representations and an extra information correlated with the first collection of object representations may include determining that a similarity between an extra information correlated with the new collection of object representations and an extra information correlated with the first collection of object representations exceeds a similarity threshold.

In certain embodiments, the system further comprises: a user interface, wherein the artificial intelligence unit is further configured to: cause the user interface to present a user with an option to execute the first one or more instruction sets for operating the device correlated with the first collection of object representations.

In some embodiments, the system further comprises: a user interface, wherein the artificial intelligence unit is further configured to: receive, via the user interface, a user's selection to execute the first one or more instruction sets for operating the device correlated with the first collection of object representations.

In certain embodiments, the artificial intelligence unit is further configured to: rate the executed first one or more instruction sets for operating the device correlated with the first collection of object representations. The rating the executed first one or more instruction sets for operating the device correlated with the first collection of object representations may include causing a user interface to display the executed first one or more instruction sets for operating the device correlated with the first collection of object representations along with one or more rating values as options to be selected by a user. The rating the executed first one or more instruction sets for operating the device correlated with the first collection of object representations may

include rating the executed first one or more instruction sets for operating the device correlated with the first collection of object representations without a user input.

In some embodiments, the system further comprises: a user interface, wherein the artificial intelligence unit is further configured to: cause the user interface to present a user with an option to cancel the execution of the executed first one or more instruction sets for operating the device correlated with the first collection of object representations. In further embodiments, the canceling the execution of the executed first one or more instruction sets for operating the device correlated with the first collection of object representations includes restoring the processor circuit or the device to a prior state. The restoring the processor circuit or the device to a prior state may include saving the state of the processor circuit or the device prior to executing the first one or more instruction sets for operating the device correlated with the first collection of object representations.

In certain embodiments, the system further comprises: an input device configured to receive a user's operating directions, the user's operating directions for instructing the processor circuit on how to operate the device.

In some embodiments, the autonomous device operating includes a partially or a fully autonomous device operating. The partially autonomous device operating may include executing the first one or more instruction sets for operating the device correlated with the first collection of object representations responsive to a user confirmation. In further embodiments, the fully autonomous device operating may include executing the first one or more instruction sets for operating the device correlated with the first collection of object representations without a user confirmation.

In certain embodiments, the artificial intelligence unit is further configured to: receive a second collection of object representations, the second collection of object representations including one or more representations of objects detected by the sensor; receive a second one or more instruction sets for operating the device; and learn the second collection of object representations correlated with the second one or more instruction sets for operating the device. In further embodiments, the second collection of object representations includes one or more representations of objects detected by the sensor at a time. In further embodiments, the second collection of object representations includes a stream of collections of object representations. In further embodiments, the second collection of object representations includes or is associated with a time stamp, an order, or a time related information. In further embodiments, the learning the first collection of object representations correlated with the first one or more instruction sets for operating the device and the learning the second collection of object representations correlated with the second one or more instruction sets for operating the device include creating a connection between the first collection of object representations correlated with the first one or more instruction sets for operating the device and the second collection of object representations correlated with the second one or more instruction sets for operating the device. The connection may include or be associated with at least one of: an occurrence count, a weight, a parameter, or a data. In further embodiments, the learning the first collection of object representations correlated with the first one or more instruction sets for operating the device and the learning the second collection of object representations correlated with the second one or more instruction sets for operating the device include updating a connection between the first collection of object representations correlated with the first one or more instruction sets for operating the device and the second collection of object representations correlated with the second one or more instruction sets for operating the device. The updating the connection between the first collection of object representations correlated with the first one or more instruction sets for operating the device and the second collection of object representations correlated with the second one or more instruction sets for operating the device may include updating at least one of: an occurrence count, a weight, a parameter, or a data included in or associated with the connection. In further embodiments, the learning the first collection of object representations correlated with the first one or more instruction sets for operating the device includes storing the first collection of object representations correlated with the first one or more instruction sets for operating the device into a first node of a knowledgebase, and wherein the learning the second collection of object representations correlated with the second one or more instruction sets for operating the device includes storing the second collection of object representations correlated with the second one or more instruction sets for operating the device into a second node of the knowledgebase. The knowledgebase may include a neural network, a graph, a collection of sequences, a sequence, a collection of knowledge cells, a knowledge structure, or a data structure. The knowledgebase may be stored in the memory unit. The learning the first collection of object representations correlated with the first one or more instruction sets for operating the device and the learning the second collection of object representations correlated with the second one or more instruction sets for operating the device include creating a connection between the first node and the second node. The learning the first collection of object representations correlated with the first one or more instruction sets for operating the device and the learning the second collection of object representations correlated with the second one or more instruction sets for operating the device include updating a connection between the first node and the second node. In further embodiments, the first collection of object representations correlated with the first one or more instruction sets for operating the device is stored into a first node of a neural network and the second collection of object representations correlated with the second one or more instruction sets for operating the device is stored into a second node of the neural network. The first node and the second node may be connected by a connection. The first node may be part of a first layer of the neural network and the second node may be part of a second layer of the neural network. In further embodiments, the first collection of object representations correlated with the first one or more instruction sets for operating the device is stored into a first node of a graph and the second collection of object representations correlated with the second one or more instruction sets for operating the device is stored into a second node of the graph. The first node and the second node may be connected by a connection. In further embodiments, the first collection of object representations correlated with the first one or more instruction sets for operating the device is stored into a first node of a sequence and the second collection of object representations correlated with the second one or more instruction sets for operating the device is stored into a second node of the sequence.

In some aspects, the disclosure relates to a non-transitory computer storage medium having a computer program stored thereon, the program including instructions that when executed by one or more processor circuits cause the one or more processor circuits to perform operations comprising:

receiving a first collection of object representations, the first collection of object representations including one or more representations of objects detected by a sensor. The operations may further include: receiving a first one or more instruction sets for operating a device. The operations may further include: learning the first collection of object representations correlated with the first one or more instruction sets for operating the device. The operations may further include: receiving a new collection of object representations, the new collection of object representations including one or more representations of objects detected by the sensor. The operations may further include: anticipating the first one or more instruction sets for operating the device correlated with the first collection of object representations based on at least a partial match between the new collection of object representations and the first collection of object representations. The operations may further include: causing an execution of the first one or more instruction sets for operating the device correlated with the first collection of object representations, the causing performed in response to the anticipating the first one or more instruction sets for operating the device correlated with the first collection of object representations based on at least a partial match between the new collection of object representations and the first collection of object representations, wherein the device performs one or more operations defined by the first one or more instruction sets for operating the device correlated with the first collection of object representations, the one or more operations by the device performed in response to the execution.

In certain embodiments, the receiving the first one or more instruction sets for operating the device includes receiving the first one or more instruction sets for operating the device from the one or more processor circuits or from another one or more processor circuits. In further embodiments, the execution of the first one or more instruction sets for operating the device correlated with the first collection of object representations is performed by the one or more processor circuits or by another one or more processor circuits.

In some aspects, the disclosure relates to a method comprising: (a) receiving a first collection of object representations by a processor circuit, the first collection of object representations including one or more representations of objects detected by a sensor. The method may further include: (b) receiving a first one or more instruction sets for operating a device by the processor circuit. The method may further include: (c) learning the first collection of object representations correlated with the first one or more instruction sets for operating the device, the learning of (c) performed by the processor circuit. The method may further include: (d) receiving a new collection of object representations by the processor circuit, the new collection of object representations including one or more representations of objects detected by the sensor. The method may further include: (e) anticipating the first one or more instruction sets for operating the device correlated with the first collection of object representations based on at least a partial match between the new collection of object representations and the first collection of object representations, the anticipating of (e) performed by the processor circuit. The method may further include: (f) executing the first one or more instruction sets for operating the device correlated with the first collection of object representations, the executing of (f) performed in response to the anticipating of (e). The method may further include: (g) performing, by the device, one or more operations defined by the first one or more instruction sets for operating the device correlated with the first collection of object representations, the one or more operations by the device performed in response to the executing of (f).

In certain embodiments, the receiving of (b) includes receiving the first one or more instruction sets for operating the device from the processor circuit or from another processor circuit. In further embodiments, the executing of (f) is performed by the processor circuit or by another processor circuit.

The operations or steps of the non-transitory computer storage medium and/or the method may be performed by any of the elements of the above described systems as applicable. The non-transitory computer storage medium and/or the method may include any of the operations, steps, and embodiments of the above described systems, non-transitory computer storage media, and/or methods as applicable as well as the following embodiments.

In some embodiments, the first one or more instruction sets for operating the device are executed by a processor circuit. In further embodiments, the first one or more instruction sets for operating the device are part of an application for operating the device. In further embodiments, the first one or more instruction sets for operating the device include one or more inputs into or one or more outputs from a processor circuit. In further embodiments, the first one or more instruction sets for operating the device include values or states of one or more registers or elements of a processor circuit. In further embodiments, the first one or more instruction sets for operating the device include one or more inputs into a logic circuit. In further embodiments, the first one or more instruction sets for operating the device include one or more outputs from a logic circuit. In further embodiments, the first one or more instruction sets for operating the device include one or more instruction sets for operating an application or an object of the application.

In certain embodiments, the receiving the first one or more instruction sets for operating the device includes receiving the first one or more instruction sets for operating the device from a processor circuit. In further embodiments, the receiving the first one or more instruction sets for operating the device includes receiving the first one or more instruction sets for operating the device as they are executed by a processor circuit. In further embodiments, the receiving the first one or more instruction sets for operating the device includes receiving the first one or more instruction sets for operating the device from a register or an element of a processor circuit. In further embodiments, the receiving the first one or more instruction sets for operating the device includes receiving the first one or more instruction sets for operating the device from an element that is part of, operating on, or coupled to a processor circuit. In further embodiments, the receiving the first one or more instruction sets for operating the device includes receiving the first one or more instruction sets for operating the device from at least one of: the memory unit, the device, a virtual machine, a runtime engine, a hard drive, a storage device, a peripheral device, a network connected device, or a user. In further embodiments, the receiving the first one or more instruction sets for operating the device includes receiving the first one or more instruction sets for operating the device from a plurality of processor circuits, applications, memory units, devices, virtual machines, runtime engines, hard drives, storage devices, peripheral devices, network connected devices, or users.

In some embodiments, the receiving the first one or more instruction sets for operating the device includes receiving the first one or more instruction sets for operating the device from a logic circuit. In further embodiments, the logic circuit

includes a microcontroller. In further embodiments, the receiving the first one or more instruction sets for operating the device from the logic circuit includes receiving the first one or more instruction sets for operating the device from an element of the logic circuit. In further embodiments, the receiving the first one or more instruction sets for operating the device from the logic circuit includes receiving one or more inputs into the logic circuit. In further embodiments, the receiving the first one or more instruction sets for operating the device from the logic circuit includes receiving one or more outputs from the logic circuit.

In certain embodiments, the receiving the first one or more instruction sets for operating the device includes receiving the first one or more instruction sets for operating the device from an application for operating the device. In further embodiments, the receiving the first one or more instruction sets for operating the device includes receiving the first one or more instruction sets for operating the device from an application, the application including instruction sets for operating the device. In further embodiments, the receiving the first one or more instruction sets for operating the device includes at least one of: tracing, profiling, or instrumentation of an element that is part of, operating on, or coupled to a processor circuit. In further embodiments, the receiving the first one or more instruction sets for operating the device includes at least one of: tracing, profiling, or instrumentation of a register of a processor circuit, the memory unit, a storage, or a repository where the first one or more instruction sets for operating the device are stored. In further embodiments, the receiving the first one or more instruction sets for operating the device includes at least one of: tracing, profiling, or instrumentation of a processor circuit, the device, a virtual machine, a runtime engine, an operating system, an execution stack, a program counter, or a processing element. In further embodiments, the receiving the first one or more instruction sets for operating the device includes at least one of: tracing, profiling, or instrumentation of a processor circuit or tracing, profiling, or instrumentation of a component of a processor circuit. In further embodiments, the receiving the first one or more instruction sets for operating the device includes at least one of: tracing, profiling, or instrumentation of an application or an object of the application. In further embodiments, the receiving the first one or more instruction sets for operating the device includes receiving the first one or more instruction sets for operating the device by an interface. The interface may include an acquisition interface.

In some embodiments, the learning the first collection of object representations correlated with the first one or more instruction sets for operating the device includes storing the first collection of object representations correlated with the first one or more instruction sets for operating the device into a memory unit, the first collection of object representations correlated with the first one or more instruction sets for operating the device being part of a plurality of collections of object representations correlated with one or more instruction sets for operating the device stored in the memory unit.

In certain embodiments, the executing the first one or more instruction sets for operating the device correlated with the first collection of object representations includes executing the first one or more instruction sets for operating the device correlated with the first collection of object representations instead of or prior to an instruction set that would have been executed next. In further embodiments, the executing the first one or more instruction sets for operating the device correlated with the first collection of object representations includes modifying one or more instruction sets of a processor circuit. In further embodiments, the executing the first one or more instruction sets for operating the device correlated with the first collection of object representations includes modifying a register or an element of a processor circuit. In further embodiments, the executing the first one or more instruction sets for operating the device correlated with the first collection of object representations includes inserting the first one or more instruction sets for operating the device correlated with the first collection of object representations into a register or an element of a processor circuit. In further embodiments, the executing the first one or more instruction sets for operating the device correlated with the first collection of object representations includes redirecting a processor circuit to the first one or more instruction sets for operating the device correlated with the first collection of object representations. In further embodiments, the executing the first one or more instruction sets for operating the device correlated with the first collection of object representations includes redirecting a processor circuit to one or more alternate instruction sets, the alternate instruction sets comprising the first one or more instruction sets for operating the device correlated with the first collection of object representations. In further embodiments, the executing the first one or more instruction sets for operating the device correlated with the first collection of object representations includes transmitting, to a processor circuit for execution, the first one or more instruction sets for operating the device correlated with the first collection of object representations. In further embodiments, the executing the first one or more instruction sets for operating the device correlated with the first collection of object representations includes issuing an interrupt to a processor circuit and executing the first one or more instruction sets for operating the device correlated with the first collection of object representations following the interrupt. In further embodiments, the executing the first one or more instruction sets for operating the device correlated with the first collection of object representations includes modifying an element that is part of, operating on, or coupled to a processor circuit.

In some embodiments, the executing the first one or more instruction sets for operating the device correlated with the first collection of object representations includes executing, by a logic circuit, the first one or more instruction sets for operating the device correlated with the first collection of object representations. In further embodiments, the logic circuit includes a microcontroller. In further embodiments, the executing, by the logic circuit, the first one or more instruction sets for operating the device correlated with the first collection of object representations includes modifying an element of the logic circuit. In further embodiments, the executing, by the logic circuit, the first one or more instruction sets for operating the device correlated with the first collection of object representations includes inserting the first one or more instruction sets for operating the device correlated with the first collection of object representations into an element of the logic circuit. In further embodiments, the executing, by the logic circuit, the first one or more instruction sets for operating the device correlated with the first collection of object representations includes redirecting the logic circuit to the first one or more instruction sets for operating the device correlated with the first collection of object representations. In further embodiments, the executing, by the logic circuit, the first one or more instruction sets for operating the device correlated with the first collection of object representations includes replacing inputs into the logic circuit with the first one or more instruction sets for

operating the device correlated with the first collection of object representations. In further embodiments, the executing, by the logic circuit, the first one or more instruction sets for operating the device correlated with the first collection of object representations includes replacing outputs from the logic circuit with the first one or more instruction sets for operating the device correlated with the first collection of object representations.

In certain embodiments, the executing the first one or more instruction sets for operating the device correlated with the first collection of object representations includes executing, by an application for operating the device, the first one or more instruction sets for operating the device correlated with the first collection of object representations. In further embodiments, the executing the first one or more instruction sets for operating the device correlated with the first collection of object representations includes modifying an application, the application including instruction sets for operating the device. In further embodiments, the executing the first one or more instruction sets for operating the device correlated with the first collection of object representations includes redirecting an application to the first one or more instruction sets for operating the device correlated with the first collection of object representations. In further embodiments, the executing the first one or more instruction sets for operating the device correlated with the first collection of object representations includes redirecting an application to one or more alternate instruction sets, the alternate instruction sets comprising the first one or more instruction sets for operating the device correlated with the first collection of object representations. In further embodiments, the executing the first one or more instruction sets for operating the device correlated with the first collection of object representations includes modifying one or more instruction sets of an application. In further embodiments, the executing the first one or more instruction sets for operating the device correlated with the first collection of object representations includes modifying a source code, a bytecode, an intermediate code, a compiled code, an interpreted code, a translated code, a runtime code, an assembly code, or a machine code. In further embodiments, the executing the first one or more instruction sets for operating the device correlated with the first collection of object representations includes modifying at least one of: the memory unit, a register of a processor circuit, a storage, or a repository where instruction sets are stored or used. In further embodiments, the executing the first one or more instruction sets for operating the device correlated with the first collection of object representations includes modifying one or more instruction sets for operating an application or an object of the application. In further embodiments, the executing the first one or more instruction sets for operating the device correlated with the first collection of object representations includes modifying at least one of: an element of a processor circuit, an element of the device, a virtual machine, a runtime engine, an operating system, an execution stack, a program counter, or a user input. In further embodiments, the executing the first one or more instruction sets for operating the device correlated with the first collection of object representations includes modifying one or more instruction sets at a source code write time, a compile time, an interpretation time, a translation time, a linking time, a loading time, or a runtime. In further embodiments, the executing the first one or more instruction sets for operating the device correlated with the first collection of object representations includes modifying one or more code segments, lines of code, statements, instructions, functions, routines, subroutines, or basic blocks. In further embodiments, the executing the first one or more instruction sets for operating the device correlated with the first collection of object representations includes a manual, an automatic, a dynamic, or a just in time (JIT) instrumentation of an application. In further embodiments, the executing the first one or more instruction sets for operating the device correlated with the first collection of object representations includes utilizing one or more of a .NET tool, a .NET application programming interface (API), a Java tool, a Java API, an operating system tool, or an independent tool for modifying instruction sets. In further embodiments, the executing the first one or more instruction sets for operating the device correlated with the first collection of object representations includes utilizing at least one of: a dynamic, an interpreted, or a scripting programming language. In further embodiments, the executing the first one or more instruction sets for operating the device correlated with the first collection of object representations includes utilizing at least one of: a dynamic code, a dynamic class loading, or a reflection. In further embodiments, the executing the first one or more instruction sets for operating the device correlated with the first collection of object representations includes utilizing an assembly language. In further embodiments, the executing the first one or more instruction sets for operating the device correlated with the first collection of object representations includes utilizing at least one of: a metaprogramming, a self-modifying code, or an instruction set modification tool. In further embodiments, the executing the first one or more instruction sets for operating the device correlated with the first collection of object representations includes utilizing at least one of: just in time (JIT) compiling, JIT interpretation, JIT translation, dynamic recompiling, or binary rewriting. In further embodiments, the executing the first one or more instruction sets for operating the device correlated with the first collection of object representations includes utilizing at least one of: a dynamic expression creation, a dynamic expression execution, a dynamic function creation, or a dynamic function execution. In further embodiments, the executing the first one or more instruction sets for operating the device correlated with the first collection of object representations includes adding or inserting additional code into a code of an application. In further embodiments, the executing the first one or more instruction sets for operating the device correlated with the first collection of object representations includes at least one of: modifying, removing, rewriting, or overwriting a code of an application. In further embodiments, the executing the first one or more instruction sets for operating the device correlated with the first collection of object representations includes at least one of: branching, redirecting, extending, or hot swapping a code of an application. The branching or redirecting the code may include inserting at least one of: a branch, a jump, or a means for redirecting an execution. In further embodiments, the executing the first one or more instruction sets for operating the device correlated with the first collection of object representations includes implementing a user's knowledge, style, or methodology of operating the device in a circumstance. In further embodiments, the executing the first one or more instruction sets for operating the device correlated with the first collection of object representations includes executing the first one or more instruction sets for operating the device correlated with the first collection of object representations via an interface. The interface may include a modification interface.

In certain embodiments, the operations of the non-transitory computer storage medium and/or the method further comprise: receiving at least one extra information. In further

embodiments, the operations of the non-transitory computer storage medium and/or the method further comprise: learning the first collection of object representations correlated with the at least one extra information.

In some embodiments, the operations of the non-transitory computer storage medium and/or the method further comprise: presenting, via a user interface, a user with an option to execute the first one or more instruction sets for operating the device correlated with the first collection of object representations.

In certain embodiments, the operations of the non-transitory computer storage medium and/or the method further comprise: receiving, via a user interface, a user's selection to execute the first one or more instruction sets for operating the device correlated with the first collection of object representations.

In some embodiments, the operations of the non-transitory computer storage medium and/or the method further comprise: rating the executed first one or more instruction sets for operating the device correlated with the first collection of object representations.

In certain embodiments, the operations of the non-transitory computer storage medium and/or the method further comprise: presenting, via a user interface, a user with an option to cancel the execution of the executed first one or more instruction sets for operating the device correlated with the first collection of object representations.

In some embodiments, the operations of the non-transitory computer storage medium and/or the method further comprise: receiving, via an input device, a user's operating directions, the user's operating directions for instructing a processor circuit on how to operate the device.

In certain embodiments, the operations of the non-transitory computer storage medium and/or the method further comprise: receiving a second collection of object representations, the second collection of object representations including one or more representations of objects detected by the sensor receiving a second one or more instruction sets for operating the device; and learning the second collection of object representations correlated with the second one or more instruction sets for operating the device.

In some aspects, the disclosure relates to a non-transitory computer storage medium having a computer program stored thereon, the program including instructions that when executed by one or more processor circuits cause the one or more processor circuits to perform operations comprising: receiving, by a first processor circuit of the one or more processor circuits, a first collection of object representations, the first collection of object representations including one or more representations of objects detected by a sensor. The operations may further comprise: receiving, by the first processor circuit of the one or more processor circuits, a first one or more instruction sets for operating a device. The operations may further comprise: learning, by the first processor circuit of the one or more processor circuits, the first collection of object representations correlated with the first one or more instruction sets for operating the device. The operations may further comprise: receiving, by the first processor circuit of the one or more processor circuits, a new collection of object representations, the new collection of object representations including one or more representations of objects detected by the sensor. The operations may further comprise: anticipating, by the first processor circuit of the one or more processor circuits, the first one or more instruction sets for operating the device correlated with the first collection of object representations based on at least a partial match between the new collection of object representations and the first collection of object representations. The operations may further comprise: causing, by the first processor circuit of the one or more processor circuits, an execution, by a second processor circuit of the one or more processor circuits, of the first one or more instruction sets for operating the device correlated with the first collection of object representations, the causing performed in response to the anticipating, by the first processor circuit of the one or more processor circuits, the first one or more instruction sets for operating the device correlated with the first collection of object representations based on at least a partial match between the new collection of object representations and the first collection of object representations, wherein the device performs one or more operations defined by the first one or more instruction sets for operating the device correlated with the first collection of object representations, the one or more operations by the device performed in response to the execution.

In some aspects, the disclosure relates to a method comprising: (a) receiving a first collection of object representations by a first processor circuit, the first collection of object representations including one or more representations of objects detected by a sensor. The method may further comprise: (b) receiving a first one or more instruction sets for operating a device by the first processor circuit. The method may further comprise: (c) learning the first collection of object representations correlated with the first one or more instruction sets for operating the device, the learning of (c) performed by the first processor circuit. The method may further comprise: (d) receiving a new collection of object representations by the first processor circuit, the new collection of object representations including one or more representations of objects detected by the sensor. The method may further comprise: (e) anticipating the first one or more instruction sets for operating the device correlated with the first collection of object representations based on at least a partial match between the new collection of object representations and the first collection of object representations, the anticipating of (e) performed by the first processor circuit. The method may further comprise: (f) executing, by a second processor circuit, the first one or more instruction sets for operating the device correlated with the first collection of object representations, the executing of (f) performed in response to the anticipating of (e). The method may further comprise: (g) performing, by the device, one or more operations defined by the first one or more instruction sets for operating the device correlated with the first collection of object representations, the one or more operations by the device performed in response to the executing of (f).

The operations or steps of the non-transitory computer storage medium and/or the method may be performed by any of the elements of the above described systems as applicable. The non-transitory computer storage medium and/or the method may include any of the operations, steps, and embodiments of the above described systems, non-transitory computer storage media, and/or methods as applicable.

In some aspects, the disclosure relates to a system for learning a device's circumstances for autonomous device operating. The system may be implemented at least in part on one or more computing devices. In some embodiments, the system comprises: a processor circuit configured to execute instruction sets for operating a device. The system may further comprise: a memory unit configured to store data. The system may further comprise: a sensor configured to detect objects. The system may further comprise: an artificial intelligence unit. The artificial intelligence unit

may be configured to: receive a first collection of object representations, the first collection of object representations including one or more representations of objects detected by the sensor. The artificial intelligence unit may be further configured to: receive a first one or more instruction sets for operating the device. The artificial intelligence unit may be further configured to: learn the first collection of object representations correlated with the first one or more instruction sets for operating the device.

In some aspects, the disclosure relates to a non-transitory computer storage medium having a computer program stored thereon, the program including instructions that when executed by one or more processor circuits cause the one or more processor circuits to perform operations comprising: receiving a first collection of object representations, the first collection of object representations including one or more representations of objects detected by a sensor. The operations may further comprise: receiving a first one or more instruction sets for operating a device. The operations may further comprise: learning the first collection of object representations correlated with the first one or more instruction sets for operating the device.

In some aspects, the disclosure relates to a method comprising: (a) receiving a first collection of object representations by a processor circuit, the first collection of object representations including one or more representations of objects detected by a sensor. The method may further comprise: (b) receiving a first one or more instruction sets for operating a device by the processor circuit. The method may further comprise: (c) learning the first collection of object representations correlated with the first one or more instruction sets for operating the device, the learning of (c) performed by the processor circuit.

The operations or steps of the non-transitory computer storage medium and/or the method may be performed by any of the elements of the above described systems as applicable. The non-transitory computer storage medium and/or the method may include any of the operations, steps, and embodiments of the above described systems, non-transitory computer storage media, and/or methods as applicable.

In some aspects, the disclosure relates to a system for using a device's circumstances for autonomous device operating. The system may be implemented at least in part on one or more computing devices. In some embodiments, the system comprises: a processor circuit configured to execute instruction sets for operating a device. The system may further comprise: a memory unit configured to store data. The system may further comprise: a sensor configured to detect objects. The system may further comprise: an artificial intelligence unit. The artificial intelligence unit may be configured to: access the memory unit that comprises a plurality of collections of object representations correlated with one or more instruction sets for operating the device, the plurality of collections of object representations correlated with one or more instruction sets for operating the device including a first collection of object representations correlated with a first one or more instruction sets for operating the device. The artificial intelligence unit may be further configured to: receive a new collection of object representations, the new collection of object representations including one or more representations of objects detected by the sensor. The artificial intelligence unit may be further configured to: anticipate the first one or more instruction sets for operating the device correlated with the first collection of object representations based on at least a partial match between the new collection of object representations and the first collection of object representations. The artificial intelligence unit may be further configured to: cause the processor circuit to execute the first one or more instruction sets for operating the device correlated with the first collection of object representations, the causing performed in response to the anticipating of the artificial intelligence unit, wherein the device performs one or more operations defined by the first one or more instruction sets for operating the device correlated with the first collection of object representations, the one or more operations performed in response to the executing by the processor circuit.

In some aspects, the disclosure relates to a non-transitory computer storage medium having a computer program stored thereon, the program including instructions that when executed by one or more processor circuits cause the one or more processor circuits to perform operations comprising: accessing a memory unit that comprises a plurality of collections of object representations correlated with one or more instruction sets for operating a device, the plurality of collections of object representations correlated with one or more instruction sets for operating the device including a first collection of object representations correlated with a first one or more instruction sets for operating the device. The operations may further comprise: receiving a new collection of object representations, the new collection of object representations including one or more representations of objects detected by a sensor. The operations may further comprise: anticipating the first one or more instruction sets for operating the device correlated with the first collection of object representations based on at least a partial match between the new collection of object representations and the first collection of object representations. The operations may further comprise: causing an execution of the first one or more instruction sets for operating the device correlated with the first collection of object representations, the causing performed in response to the anticipating the first one or more instruction sets for operating the device correlated with the first collection of object representations based on at least a partial match between the new collection of object representations and the first collection of object representations, wherein the device performs one or more operations defined by the first one or more instruction sets for operating the device correlated with the first collection of object representations, the one or more operations by the device performed in response to the execution.

In some aspects, the disclosure relates to a method comprising: (a) accessing a memory unit that comprises a plurality of collections of object representations correlated with one or more instruction sets for operating a device, the plurality of collections of object representations correlated with one or more instruction sets for operating the device including a first collection of object representations correlated with a first one or more instruction sets for operating the device, the accessing of (a) performed by a processor circuit. The method may further comprise: (b) receiving a new collection of object representations by the processor circuit, the new collection of object representations including one or more representations of objects detected by a sensor. The method may further comprise: (c) anticipating the first one or more instruction sets for operating the device correlated with the first collection of object representations based on at least a partial match between the new collection of object representations and the first collection of object representations, the anticipating of (c) performed by the processor circuit. The method may further comprise: (d) executing the first one or more instruction sets for operating the device correlated with the first collection of object

representations, the executing of (d) performed in response to the anticipating of (c). The method may further comprise: (e) performing, by the device, one or more operations defined by the first one or more instruction sets for operating the device correlated with the first collection of object representations, the one or more operations by the device performed in response to the executing of (d).

The operations or steps of the non-transitory computer storage medium and/or the method may be performed by any of the elements of the above described systems as applicable. The non-transitory computer storage medium and/or the method may include any of the operations, steps, and embodiments of the above described systems, non-transitory computer storage media, and/or methods as applicable.

In some aspects, the disclosure relates to a system for learning and using a device's circumstances for autonomous device operating. The system may be implemented at least in part on one or more computing devices. In some embodiments, the system comprises: a processor circuit configured to execute instruction sets for operating a device. The system may further comprise: a memory unit configured to store data. The system may further comprise: a sensor configured to detect objects. The system may further comprise: an artificial intelligence unit. The artificial intelligence unit may be configured to: receive a first stream of collections of object representations, the first stream of collections of object representations including one or more collections of representations of objects detected by the sensor. The artificial intelligence unit may be further configured to: receive a first one or more instruction sets for operating the device. The artificial intelligence unit may be further configured to: learn the first stream of collections of object representations correlated with the first one or more instruction sets for operating the device. The artificial intelligence unit may be further configured to: receive a new stream of collections of object representations, the new stream of collections of object representations including one or more collections of representations of objects detected by the sensor. The artificial intelligence unit may be further configured to: anticipate the first one or more instruction sets for operating the device correlated with the first stream of collections of object representations based on at least a partial match between the new stream of collections of object representations and the first stream of collections of object representations. The artificial intelligence unit may be further configured to: cause the processor circuit to execute the first one or more instruction sets for operating the device correlated with the first stream of collections of object representations, the causing performed in response to the anticipating of the artificial intelligence unit, wherein the device performs one or more operations defined by the first one or more instruction sets for operating the device correlated with the first stream of collections of object representations, the one or more operations performed in response to the executing by the processor circuit.

In certain embodiments, each collection of object representations includes one or more representations of objects detected by the sensor at a time. In further embodiments, each collection of object representations includes one or more of object representations. In further embodiments, each collection of object representations includes or is associated with a time stamp, an order, or a time related information. In further embodiments, the first stream of collections of object representations includes one or more collections of representations of objects detected by the sensor over time. In further embodiments, the new stream of collections of object representations includes one or more collections of representations of objects detected by the sensor over time. In further embodiments, the first or the new stream of collections of object representations includes one or more collections of representations of objects in the device's surrounding. In further embodiments, the first or the new stream of collections of object representations includes one or more collections of representations of objects in a remote device's surrounding. In further embodiments, an object representation of a stream of collections of object representations includes one or more object properties. In further embodiments, the first or the new stream of collections of object representations includes one or more object properties. In further embodiments, the first stream of collections of object representations includes a comparative stream of collections of object representations whose at least one portion can be used for comparisons with at least one portion of streams of collections of object representations subsequent to the first stream of collections of object representations, the streams of collections of object representations subsequent to the first stream of collections of object representations comprising the new stream of collections of object representations. In further embodiments, the first stream of collections of object representations includes a comparative stream of collections of object representations that can be used for comparisons with the new stream of collections of object representations. In further embodiments, the new stream of collections of object representations includes an anticipatory stream of collections of object representations whose correlated one or more instruction sets can be used for anticipation of one or more instruction sets to be executed by the processor circuit.

In some embodiments, the first one or more instruction sets for operating the device include one or more instruction sets that temporally correspond to the first stream of collections of object representations. In further embodiments, the one or more instruction sets that temporally correspond to the first stream of collections of object representations include one or more instruction sets executed at a time of generating the first stream of collections of object representations. In further embodiments, the one or more instruction sets that temporally correspond to the first stream of collections of object representations include one or more instruction sets executed prior to generating the first stream of collections of object representations. In further embodiments, the one or more instruction sets that temporally correspond to the first stream of collections of object representations include one or more instruction sets executed within a threshold period of time prior to generating the first stream of collections of object representations. In further embodiments, the one or more instruction sets that temporally correspond to the first stream of collections of object representations include one or more instruction sets executed subsequent to generating the first stream of collections of object representations. In further embodiments, the one or more instruction sets that temporally correspond to the first stream of collections of object representations include one or more instruction sets executed within a threshold period of time subsequent to generating the first stream of collections of object representations. In further embodiments, the one or more instruction sets that temporally correspond to the first stream of collections of object representations include one or more instruction sets executed within a threshold period of time prior to generating the first stream of collections of object representations or a threshold period of time subsequent to generating the first stream of collections of object representations.

In certain embodiments, the first stream of collections of object representations correlated with the first one or more instruction sets for operating the device include a knowledge of how the device operated in a circumstance. In further embodiments, the first stream of collections of object representations correlated with the first one or more instruction sets for operating the device are included in a neuron, a node, a vertex, or an element of a knowledgebase. In further embodiments, the knowledgebase includes a neural network, a graph, a collection of sequences, a sequence, a collection of knowledge cells, a knowledge structure, or a data structure. In further embodiments, some of the neurons, nodes, vertices, or elements are interconnected. In further embodiments, the first stream of collections of object representations correlated with the first one or more instruction sets for operating the device are structured into a knowledge cell. In further embodiments, the knowledge cell is included in a neuron, a node, a vertex, or an element of a knowledgebase. The knowledgebase may include a neural network, a graph, a collection of sequences, a sequence, a collection of knowledge cells, a knowledge structure, or a data structure. Some of the neurons, nodes, vertices, or elements may be interconnected. In further embodiments, the learning the first stream of collections of object representations correlated with the first one or more instruction sets for operating the device includes correlating the first stream of collections of object representations with the first one or more instruction sets for operating the device. In further embodiments, the correlating the first stream of collections of object representations with the first one or more instruction sets for operating the device includes generating a knowledge cell, the knowledge cell comprising the first stream of collections of object representations correlated with the first one or more instruction sets for operating the device. In further embodiments, the correlating the first stream of collections of object representations with the first one or more instruction sets for operating the device includes structuring a knowledge of how the device operated in a circumstance. In further embodiments, the learning the first stream of collections of object representations correlated with the first one or more instruction sets for operating the device includes learning a user's knowledge, style, or methodology of operating the device in a circumstance.

In some embodiments, the learning the first stream of collections of object representations correlated with the first one or more instruction sets for operating the device includes storing the first stream of collections of object representations correlated with the first one or more instruction sets for operating the device into the memory unit, the first stream of collections of object representations correlated with the first one or more instruction sets for operating the device being part of a plurality of streams of collections of object representations correlated with one or more instruction sets for operating the device stored in the memory unit. In further embodiments, the plurality of streams of collections of object representations correlated with one or more instruction sets for operating the device include a neural network, a graph, a collection of sequences, a sequence, a collection of knowledge cells, a knowledgebase, a knowledge structure, or a data structure. In further embodiments, the plurality of streams of collections of object representations correlated with one or more instruction sets for operating the device are organized into a neural network, a graph, a collection of sequences, a sequence, a collection of knowledge cells, a knowledgebase, a knowledge structure, or a data structure. In further embodiments, each stream of collections of object representations correlated with one or more instruction sets for operating the device of the plurality of streams of collections of object representations correlated with one or more instruction sets for operating the device is included in a neuron, a node, a vertex, or an element of a knowledgebase. The knowledgebase may include a neural network, a graph, a collection of sequences, a sequence, a collection of knowledge cells, a knowledge structure, or a data structure. Some of the neurons, nodes, vertices, or elements may be interconnected. In further embodiments, the plurality of streams of collections of object representations correlated with one or more instruction sets for operating the device include a user's knowledge, style, or methodology of operating the device in circumstances. In further embodiments, the plurality of streams of collections of object representations correlated with one or more instruction sets for operating the device are stored on a remote computing device or a remote computing system. In further embodiments, the plurality of streams of collections of object representations correlated with one or more instruction sets for operating the device include an artificial intelligence system for knowledge structuring, storing, or representation. The artificial intelligence system for knowledge structuring, storing, or representation may include at least one of: a deep learning system, a supervised learning system, an unsupervised learning system, a neural network, a search-based system, an optimization-based system, a logic-based system, a fuzzy logic-based system, a tree-based system, a graph-based system, a hierarchical system, a symbolic system, a sub-symbolic system, an evolutionary system, a genetic system, a multi-agent system, a deterministic system, a probabilistic system, or a statistical system.

In certain embodiments, the anticipating the first one or more instruction sets for operating the device correlated with the first stream of collections of object representations based on at least a partial match between the new stream of collections of object representations and the first stream of collections of object representations includes comparing at least one portion of the new stream of collections of object representations with at least one portion of the first stream of collections of object representations. In further embodiments, the at least one portion of the new stream of collections of object representations include at least one collection of object representations, at least one object representation, or at least one object property of the new stream of collections of object representations. In further embodiments, the at least one portion of the first stream of collections of object representations include at least one collection of object representations, at least one object representation, or at least one object property of the first stream of collections of object representations. In further embodiments, the anticipating the first one or more instruction sets for operating the device correlated with the first stream of collections of object representations based on at least a partial match between the new stream of collections of object representations and the first stream of collections of object representations includes comparing at least one collection of object representations from the new stream of collections of object representations with at least one collection of object representations from the first stream of collections of object representations. In further embodiments, the comparing at least one collection of object representations from the new stream of collections of object representations with at least one collection of object representations from the first stream of collections of object representations includes comparing at least one object representation of the at least one collection of object representations from the new stream of collections of object

representations with at least one object representation of the at least one collection of object representations from the first stream of collections of object representations. The comparing at least one object representation of the at least one collection of object representations from the new stream of collections of object representations with at least one object representation of the at least one collection of object representations from the first stream of collections of object representations may include comparing at least one object property of the at least one object representation of the at least one collection of object representations from the new stream of collections of object representations with at least one object property of the at least one object representation of the at least one collection of object representations from the first stream of collections of object representations.

In some embodiments, the anticipating the first one or more instruction sets for operating the device correlated with the first stream of collections of object representations based on at least a partial match between the new stream of collections of object representations and the first stream of collections of object representations includes determining that there is at least a partial match between the new stream of collections of object representations and the first stream of collections of object representations. In further embodiments, the determining that there is at least a partial match between the new stream of collections of object representations and the first stream of collections of object representations includes determining that there is at least a partial match between one or more portions of the new stream of collections of object representations and one or more portions of the first stream of collections of object representations. In further embodiments, the determining that there is at least a partial match between the new stream of collections of object representations and the first stream of collections of object representations includes determining that a similarity between at least one portion of the new stream of collections of object representations and at least one portion of the first stream of collections of object representations exceeds a similarity threshold. In further embodiments, the determining that there is at least a partial match between the new stream of collections of object representations and the first stream of collections of object representations includes determining a substantial similarity between at least one portion of the new stream of collections of object representations and at least one portion of the first stream of collections of object representations. The substantial similarity may be achieved when a similarity between the at least one portion of the new stream of collections of object representations and the at least one portion of the first stream of collections of object representations exceeds a similarity threshold. The substantial similarity may be achieved when a number or a percentage of matching or partially matching portions of the new stream of collections of object representations and portions of the first stream of collections of object representations exceeds a threshold number or threshold percentage. In further embodiments, the determining that there is at least a partial match between the new stream of collections of object representations and the first stream of collections of object representations includes determining that a number or a percentage of matching or partially matching collections of object representations from the new stream of collections of object representations and from the first stream of collections of object representations exceeds a threshold number or threshold percentage. The matching or partially matching collections of object representations from the new stream of collections of object representations and from the first stream of collections of object representations may be determined factoring in at least one of: an importance of a collection of object representations, an order of a collection of object representations, a threshold for a similarity in a collection of object representations, or a threshold for a difference in a collection of object representations. In further embodiments, the determining that there is at least a partial match between the new stream of collections of object representations and the first stream of collections of object representations includes determining that a number or a percentage of matching or partially matching object representations from the new stream of collections of object representations and from the first stream of collections of object representations exceeds a threshold number or threshold percentage. The matching or partially matching object representations from the new stream of collections of object representations and from the first stream of collections of object representations may be determined factoring in at least one of: an association of an object representation with a collection of object representations, a type of an object representation, an importance of an object representation, a threshold for a similarity in an object representation, or a threshold for a difference in an object representation. In further embodiments, the determining that there is at least a partial match between the new stream of collections of object representations and the first stream of collections of object representations includes determining that a number or a percentage of matching or partially matching object properties from the new stream of collections of object representations and from the first stream of collections of object representations exceeds a threshold number or threshold percentage. The matching or partially matching object properties from the new stream of collections of object representations and from the first stream of collections of object representations may be determined factoring in at least one of: an association of an object property with an object representation, an association of an object property with a collection of object representations, a category of an object property, an importance of an object property, a threshold for a similarity in an object property, or a threshold for a difference in an object property. In further embodiments, determining that there is at least a partial match between the new stream of collections of object representations and the first stream of collections of object representations includes determining that there is at least a partial match between at least one collection of object representations from the new stream of collections of object representations and at least one collection of object representations from the first stream of collections of object representations. The determining that there is at least a partial match between at least one collection of object representations from the new stream of collections of object representations and at least one collection of object representations from the first stream of collections of object representations may include determining that there is at least a partial match between at least one object representation of the at least one collection of object representations from the new stream of collections of object representations and at least one object representation of the at least one collection of object representations from the first stream of collections of object representations. The determining that there is at least a partial match between at least one object representation of the at least one collection of object representations from the new stream of collections of object representations and at least one object representation of the at least one collection of object representations from the first stream of collections of object representations may include determining that there is at least a partial match between at least one

object property of the at least one object representation of the at least one collection of object representations from the new stream of collections of object representations and at least one object property of the at least one object representation of the at least one collection of object representations from the first stream of collections of object representations.

In some embodiments, the causing the processor circuit to execute the first one or more instruction sets for operating the device correlated with the first stream of collections of object representations includes causing the processor circuit to execute the first one or more instruction sets for operating the device correlated with the first stream of collections of object representations instead of or prior to an instruction set that would have been executed next. In further embodiments, the causing the processor circuit to execute the first one or more instruction sets for operating the device correlated with the first stream of collections of object representations includes modifying one or more instruction sets of the processor circuit. In further embodiments, the causing the processor circuit to execute the first one or more instruction sets for operating the device correlated with the first stream of collections of object representations includes modifying a register or an element of the processor circuit. In further embodiments, the causing the processor circuit to execute the first one or more instruction sets for operating the device correlated with the first stream of collections of object representations includes inserting the first one or more instruction sets for operating the device correlated with the first stream of collections of object representations into a register or an element of the processor circuit. In further embodiments, the causing the processor circuit to execute the first one or more instruction sets for operating the device correlated with the first stream of collections of object representations includes redirecting the processor circuit to the first one or more instruction sets for operating the device correlated with the first stream of collections of object representations. In further embodiments, the causing the processor circuit to execute the first one or more instruction sets for operating the device correlated with the first stream of collections of object representations includes redirecting the processor circuit to one or more alternate instruction sets, the alternate instruction sets comprising the first one or more instruction sets for operating the device correlated with the first stream of collections of object representations. In further embodiments, the causing the processor circuit to execute the first one or more instruction sets for operating the device correlated with the first stream of collections of object representations includes transmitting, to the processor circuit for execution, the first one or more instruction sets for operating the device correlated with the first stream of collections of object representations. In further embodiments, the executing the first one or more instruction sets for operating the device correlated with the first stream of collections of object representations includes issuing an interrupt to the processor circuit and executing the first one or more instruction sets for operating the device correlated with the first stream of collections of object representations following the interrupt. In further embodiments, the causing the processor circuit to execute the first one or more instruction sets for operating the device correlated with the first stream of collections of object representations includes modifying an element that is part of, operating on, or coupled to the processor circuit.

In certain embodiments, the processor circuit includes a logic circuit, and wherein the causing the processor circuit to execute the first one or more instruction sets for operating the device correlated with the first stream of collections of object representations includes causing the logic circuit to execute the first one or more instruction sets for operating the device correlated with the first stream of collections of object representations. In further embodiments, the logic circuit includes a microcontroller. In further embodiments, the causing the logic circuit to execute the first one or more instruction sets for operating the device correlated with the first stream of collections of object representations includes modifying an element of the logic circuit. In further embodiments, the causing the logic circuit to execute the first one or more instruction sets for operating the device correlated with the first stream of collections of object representations includes inserting the first one or more instruction sets for operating the device correlated with the first stream of collections of object representations into an element of the logic circuit. In further embodiments, the causing the logic circuit to execute the first one or more instruction sets for operating the device correlated with the first stream of collections of object representations includes redirecting the logic circuit to the first one or more instruction sets for operating the device correlated with the first stream of collections of object representations. In further embodiments, the causing the logic circuit to execute the first one or more instruction sets for operating the device correlated with the first stream of collections of object representations includes replacing inputs into the logic circuit with the first one or more instruction sets for operating the device correlated with the first stream of collections of object representations. In further embodiments, the causing the logic circuit to execute the first one or more instruction sets for operating the device correlated with the first stream of collections of object representations includes replacing outputs from the logic circuit with the first one or more instruction sets for operating the device correlated with the first stream of collections of object representations.

In some embodiments, the causing the processor circuit to execute the first one or more instruction sets for operating the device correlated with the first stream of collections of object representations includes causing an application for operating the device to execute the first one or more instruction sets for operating the device correlated with the first stream of collections of object representations, the application running on the processor circuit.

In certain embodiments, the system further comprises: an application including instruction sets for operating the device, the application running on the processor circuit, wherein the causing the processor circuit to execute the first one or more instruction sets for operating the device correlated with the first stream of collections of object representations includes modifying the application.

In some embodiments, the causing the processor circuit to execute the first one or more instruction sets for operating the device correlated with the first stream of collections of object representations includes redirecting an application to the first one or more instruction sets for operating the device correlated with the first stream of collections of object representations, the application running on the processor circuit. In further embodiments, the causing the processor circuit to execute the first one or more instruction sets for operating the device correlated with the first stream of collections of object representations includes redirecting an application to one or more alternate instruction sets, the application running on the processor circuit, the alternate instruction sets comprising the first one or more instruction sets for operating the device correlated with the first stream of collections of object representations. In further embodi-

ments, the causing the processor circuit to execute the first one or more instruction sets for operating the device correlated with the first stream of collections of object representations includes modifying one or more instruction sets of an application, the application running on the processor circuit. In further embodiments, the causing the processor circuit to execute the first one or more instruction sets for operating the device correlated with the first stream of collections of object representations includes modifying a source code, a bytecode, an intermediate code, a compiled code, an interpreted code, a translated code, a runtime code, an assembly code, or a machine code. In further embodiments, the causing the processor circuit to execute the first one or more instruction sets for operating the device correlated with the first stream of collections of object representations includes modifying at least one of: the memory unit, a register of the processor circuit, a storage, or a repository where instruction sets are stored or used. In further embodiments, the causing the processor circuit to execute the first one or more instruction sets for operating the device correlated with the first stream of collections of object representations includes modifying one or more instruction sets for operating an application or an object of the application, the application running on the processor circuit. In further embodiments, the causing the processor circuit to execute the first one or more instruction sets for operating the device correlated with the first stream of collections of object representations includes modifying at least one of: an element of the processor circuit, an element of the device, a virtual machine, a runtime engine, an operating system, an execution stack, a program counter, or a user input. In further embodiments, the causing the processor circuit to execute the first one or more instruction sets for operating the device correlated with the first stream of collections of object representations includes modifying one or more instruction sets at a source code write time, a compile time, an interpretation time, a translation time, a linking time, a loading time, or a runtime. In further embodiments, the causing the processor circuit to execute the first one or more instruction sets for operating the device correlated with the first stream of collections of object representations includes modifying one or more code segments, lines of code, statements, instructions, functions, routines, subroutines, or basic blocks. In further embodiments, the causing the processor circuit to execute the first one or more instruction sets for operating the device correlated with the first stream of collections of object representations includes a manual, an automatic, a dynamic, or a just in time (JIT) instrumentation of an application, the application running on the processor circuit. In further embodiments, the causing the processor circuit to execute the first one or more instruction sets for operating the device correlated with the first stream of collections of object representations includes utilizing one or more of a .NET tool, a .NET application programming interface (API), a Java tool, a Java API, an operating system tool, or an independent tool for modifying instruction sets. In further embodiments, the causing the processor circuit to execute the first one or more instruction sets for operating the device correlated with the first stream of collections of object representations includes utilizing at least one of: a dynamic, an interpreted, or a scripting programming language. In further embodiments, the causing the processor circuit to execute the first one or more instruction sets for operating the device correlated with the first stream of collections of object representations includes utilizing at least one of: a dynamic code, a dynamic class loading, or a reflection. In further embodiments, the causing the processor circuit to execute the first one or more instruction sets for operating the device correlated with the first stream of collections of object representations includes utilizing an assembly language. In further embodiments, the causing the processor circuit to execute the first one or more instruction sets for operating the device correlated with the first stream of collections of object representations includes utilizing at least one of: a metaprogramming, a self-modifying code, or an instruction set modification tool. In further embodiments, the causing the processor circuit to execute the first one or more instruction sets for operating the device correlated with the first stream of collections of object representations includes utilizing at least one of: just in time (JIT) compiling, JIT interpretation, JIT translation, dynamic recompiling, or binary rewriting. In further embodiments, the causing the processor circuit to execute the first one or more instruction sets for operating the device correlated with the first stream of collections of object representations includes utilizing at least one of: a dynamic expression creation, a dynamic expression execution, a dynamic function creation, or a dynamic function execution. In further embodiments, the causing the processor circuit to execute the first one or more instruction sets for operating the device correlated with the first stream of collections of object representations includes adding or inserting additional code into a code of an application, the application running on the processor circuit. In further embodiments, the causing the processor circuit to execute the first one or more instruction sets for operating the device correlated with the first stream of collections of object representations includes at least one of: modifying, removing, rewriting, or overwriting a code of an application, the application running on the processor circuit. In further embodiments, the causing the processor circuit to execute the first one or more instruction sets for operating the device correlated with the first stream of collections of object representations includes at least one of: branching, redirecting, extending, or hot swapping a code of an application, the application running on the processor circuit. The branching or redirecting the code may include inserting at least one of: a branch, a jump, or a means for redirecting an execution. In further embodiments, the executing the first one or more instruction sets for operating the device correlated with the first stream of collections of object representations includes implementing a user's knowledge, style, or methodology of operating the device in a circumstance.

In certain embodiments, the system further comprises: an interface configured to cause execution of instruction sets, wherein the executing the first one or more instruction sets for operating the device correlated with the first stream of collections of object representations is caused by the interface. The interface may include a modification interface.

In some embodiments, the performing the one or more operations defined by the first one or more instruction sets for operating the device correlated with the first stream of collections of object representations includes implementing a user's knowledge, style, or methodology of operating the device in a circumstance.

In certain embodiments, the system further comprises: an application running on the processor circuit.

In some embodiments, the instruction sets for operating the device are part of an application for operating the device, the application running on the processor circuit.

In certain embodiments, the system further comprises: an application for operating the device, the application running on the processor circuit. The application for operating the device may include the instruction sets for operating the device.

In some embodiments, the artificial intelligence unit is further configured to: receive at least one extra information. In further embodiments, the at least one extra information include one or more of: a time information, a location information, a computed information, or a contextual information. In further embodiments, the at least one extra information include one or more of: an information on an object, an information on an object representation, an information on a collection of object representations, an information on a stream of collections of object representations, an information on a device's circumstance, an information on an instruction set, an information on an application, an information on the processor circuit, an information on the device, or an information on an user. In further embodiments, the artificial intelligence unit is further configured to: learn the first stream of collections of object representations correlated with the at least one extra information. The learning the first stream of collections of object representations correlated with at least one extra information may include correlating the first stream of collections of object representations with the at least one extra information. The learning the first stream of collections of object representations correlated with at least one extra information may include storing the first stream of collections of object representations correlated with the at least one extra information into the memory unit. In further embodiments, the anticipating the first one or more instruction sets for operating the device correlated with the first stream of collections of object representations based on at least a partial match between the new stream of collections of object representations and the first stream of collections of object representations includes anticipating the first one or more instruction sets for operating the device correlated with the first stream of collections of object representations based on at least a partial match between an extra information correlated with the new stream of collections of object representations and an extra information correlated with the first stream of collections of object representations. The anticipating the first one or more instruction sets for operating the device correlated with the first stream of collections of object representations based on at least a partial match between an extra information correlated with the new stream of collections of object representations and an extra information correlated with the first stream of collections of object representations may include comparing an extra information correlated with the new stream of collections of object representations and an extra information correlated with the first stream of collections of object representations. The anticipating the first one or more instruction sets for operating the device correlated with the first stream of collections of object representations based on at least a partial match between an extra information correlated with the new stream of collections of object representations and an extra information correlated with the first stream of collections of object representations may include determining that a similarity between an extra information correlated with the new stream of collections of object representations and an extra information correlated with the first stream of collections of object representations exceeds a similarity threshold.

In certain embodiments, the system further comprises: a user interface, wherein the artificial intelligence unit is further configured to: cause the user interface to present a user with an option to execute the first one or more instruction sets for operating the device correlated with the first stream of collections of object representations.

In some embodiments, the system further comprises: a user interface, wherein the artificial intelligence unit is further configured to: receive, via the user interface, a user's selection to execute the first one or more instruction sets for operating the device correlated with the first stream of collections of object representations.

In certain embodiments, the artificial intelligence unit is further configured to: rate the executed first one or more instruction sets for operating the device correlated with the first stream of collections of object representations. The rating the executed first one or more instruction sets for operating the device correlated with the first stream of collections of object representations may include causing a user interface to display the executed first one or more instruction sets for operating the device correlated with the first stream of collections of object representations along with one or more rating values as options to be selected by a user. The rating the executed first one or more instruction sets for operating the device correlated with the first stream of collections of object representations may include rating the executed first one or more instruction sets for operating the device correlated with the first stream of collections of object representations without a user input.

In some embodiments, the system further comprises: a user interface, wherein the artificial intelligence unit is further configured to: cause the user interface to present a user with an option to cancel the execution of the executed first one or more instruction sets for operating the device correlated with the first stream of collections of object representations. In further embodiments, the canceling the execution of the executed first one or more instruction sets for operating the device correlated with the first stream of collections of object representations includes restoring the processor circuit or the device to a prior state. The restoring the processor circuit or the device to a prior state may include saving the state of the processor circuit or the device prior to executing the first one or more instruction sets for operating the device correlated with the first stream of collections of object representations.

In certain embodiments, the system further comprises: an input device configured to receive a user's operating directions, the user's operating directions for instructing the processor circuit on how to operate the device.

In some embodiments, the autonomous device operating includes a partially or a fully autonomous device operating. The partially autonomous device operating may include executing the first one or more instruction sets for operating the device correlated with the first stream of collections of object representations responsive to a user confirmation. The fully autonomous device operating may include executing the first one or more instruction sets for operating the device correlated with the first stream of collections of object representations without a user confirmation.

In certain embodiments, the artificial intelligence unit is further configured to: receive a second stream of collections of object representations, the second stream of collections of object representations including one or more collections of representations of objects detected by the sensor; receive a second one or more instruction sets for operating the device; and learn the second stream of collections of object representations correlated with the second one or more instruction sets for operating the device. In further embodiments, the second stream of collections of object representations includes one or more collections of representations of objects detected by the sensor over time. In further embodiments, the second stream of collections of object representations includes or is associated with a time stamp, an order,

or a time related information. In further embodiments, the learning the first stream of collections of object representations correlated with the first one or more instruction sets for operating the device and the learning the second stream of collections of object representations correlated with the second one or more instruction sets for operating the device include creating a connection between the first stream of collections of object representations correlated with the first one or more instruction sets for operating the device and the second stream of collections of object representations correlated with the second one or more instruction sets for operating the device. The connection may include or is associated with at least one of: an occurrence count, a weight, a parameter, or a data. In further embodiments, the learning the first stream of collections of object representations correlated with the first one or more instruction sets for operating the device and the learning the second stream of collections of object representations correlated with the second one or more instruction sets for operating the device include updating a connection between the first stream of collections of object representations correlated with the first one or more instruction sets for operating the device and the second stream of collections of object representations correlated with the second one or more instruction sets for operating the device. In further embodiments, the updating the connection between the first stream of collections of object representations correlated with the first one or more instruction sets for operating the device and the second stream of collections of object representations correlated with the second one or more instruction sets for operating the device includes updating at least one of: an occurrence count, a weight, a parameter, or a data included in or associated with the connection. In further embodiments, the learning the first stream of collections of object representations correlated with the first one or more instruction sets for operating the device includes storing the first stream of collections of object representations correlated with the first one or more instruction sets for operating the device into a first node of a knowledgebase, and wherein the learning the second stream of collections of object representations correlated with the second one or more instruction sets for operating the device includes storing the second stream of collections of object representations correlated with the second one or more instruction sets for operating the device into a second node of the knowledgebase. The knowledgebase may include a neural network, a graph, a collection of sequences, a sequence, a collection of knowledge cells, a knowledge structure, or a data structure. In further embodiments, the knowledgebase may be stored in the memory unit. The learning the first stream of collections of object representations correlated with the first one or more instruction sets for operating the device and the learning the second stream of collections of object representations correlated with the second one or more instruction sets for operating the device may include creating a connection between the first node and the second node. The learning the first stream of collections of object representations correlated with the first one or more instruction sets for operating the device and the learning the second stream of collections of object representations correlated with the second one or more instruction sets for operating the device may include updating a connection between the first node and the second node. In further embodiments, the first stream of collections of object representations correlated with the first one or more instruction sets for operating the device is stored into a first node of a neural network and the second stream of collections of object representations correlated with the second one or more instruction sets for operating the device is stored into a second node of the neural network. The first node and the second node may be connected by a connection. The first node may be part of a first layer of the neural network and the second node may be part of a second layer of the neural network. In further embodiments, the first stream of collections of object representations correlated with the first one or more instruction sets for operating the device is stored into a first node of a graph and the second stream of collections of object representations correlated with the second one or more instruction sets for operating the device is stored into a second node of the graph. The first node and the second node may be connected by a connection. In further embodiments, the first stream of collections of object representations correlated with the first one or more instruction sets for operating the device is stored into a first node of a sequence and the second stream of collections of object representations correlated with the second one or more instruction sets for operating the device is stored into a second node of the sequence.

In some aspects, the disclosure relates to a non-transitory computer storage medium having a computer program stored thereon, the program including instructions that when executed by one or more processor circuits cause the one or more processor circuits to perform operations comprising: receiving a first stream of collections of object representations, the first stream of collections of object representations including one or more collections of representations of objects detected by a sensor. The operations may further comprise: receiving a first one or more instruction sets for operating a device. The operations may further comprise: learning the first stream of collections of object representations correlated with the first one or more instruction sets for operating the device. The operations may further comprise: receiving a new stream of collections of object representations, the new stream of collections of object representations including one or more collections of representations of objects detected by the sensor. The operations may further comprise: anticipating the first one or more instruction sets for operating the device correlated with the first stream of collections of object representations based on at least a partial match between the new stream of collections of object representations and the first stream of collections of object representations. The operations may further comprise: causing an execution of the first one or more instruction sets for operating the device correlated with the first stream of collections of object representations, the causing performed in response to the anticipating the first one or more instruction sets for operating the device correlated with the first stream of collections of object representations based on at least a partial match between the new stream of collections of object representations and the first stream of collections of object representations, wherein the device performs one or more operations defined by the first one or more instruction sets for operating the device correlated with the first stream of collections of object representations, the one or more operations by the device performed in response to the execution.

In certain embodiments, the receiving the first one or more instruction sets for operating the device includes receiving the first one or more instruction sets for operating the device from the one or more processor circuits or from another one or more processor circuits. In further embodiments, the execution of the first one or more instruction sets for operating the device correlated with the first stream of

collections of object representations is performed by the one or more processor circuits or by another one or more processor circuits.

In some aspects, the disclosure relates to a method comprising: (a) receiving a first stream of collections of object representations by a processor circuit, the first stream of collections of object representations including one or more collections of representations of objects detected by a sensor. The method may further comprise: (b) receiving a first one or more instruction sets for operating a device by the processor circuit. The method may further comprise: (c) learning the first stream of collections of object representations correlated with the first one or more instruction sets for operating the device, the learning of (c) performed by the processor circuit. The method may further comprise: (d) receiving a new stream of collections of object representations by the processor circuit, the new stream of collections of object representations including one or more collections of representations of objects detected by the sensor. The method may further comprise: (e) anticipating the first one or more instruction sets for operating the device correlated with the first stream of collections of object representations based on at least a partial match between the new stream of collections of object representations and the first stream of collections of object representations, the anticipating of (e) performed by the processor circuit. The method may further comprise: (f) executing the first one or more instruction sets for operating the device correlated with the first stream of collections of object representations, the executing of (f) performed in response to the anticipating of (e). The method may further comprise: (g) performing, by the device, one or more operations defined by the first one or more instruction sets for operating the device correlated with the first stream of collections of object representations, the one or more operations by the device performed in response to the executing of (f).

In some embodiments, the receiving of (b) includes receiving the first one or more instruction sets for operating the device from the processor circuit or from another processor circuit. In further embodiments, the executing of (f) is performed by the processor circuit or by another processor circuit.

The operations or steps of the non-transitory computer storage medium and/or the method may be performed by any of the elements of the above described systems as applicable. The non-transitory computer storage medium and/or the method may include any of the operations, steps, and embodiments of the above described systems, non-transitory computer storage media, and/or methods as applicable as well as the following embodiments.

In certain embodiments, the learning the first stream of collections of object representations correlated with the first one or more instruction sets for operating the device includes storing the first stream of collections of object representations correlated with the first one or more instruction sets for operating the device into a memory unit, the first stream of collections of object representations correlated with the first one or more instruction sets for operating the device being part of a plurality of streams of collections of object representations correlated with one or more instruction sets for operating the device stored in the memory unit.

In some embodiments, the executing the first one or more instruction sets for operating the device correlated with the first stream of collections of object representations includes executing the first one or more instruction sets for operating the device correlated with the first stream of collections of object representations instead of or prior to an instruction set that would have been executed next. In further embodiments, the executing the first one or more instruction sets for operating the device correlated with the first stream of collections of object representations includes modifying one or more instruction sets of a processor circuit. In further embodiments, the executing the first one or more instruction sets for operating the device correlated with the first stream of collections of object representations includes modifying a register or an element of a processor circuit. In further embodiments, the executing the first one or more instruction sets for operating the device correlated with the first stream of collections of object representations includes inserting the first one or more instruction sets for operating the device correlated with the first stream of collections of object representations into a register or an element of a processor circuit. In further embodiments, the executing the first one or more instruction sets for operating the device correlated with the first stream of collections of object representations includes redirecting a processor circuit to the first one or more instruction sets for operating the device correlated with the first stream of collections of object representations. In further embodiments, the executing the first one or more instruction sets for operating the device correlated with the first stream of collections of object representations includes redirecting a processor circuit to one or more alternate instruction sets, the alternate instruction sets comprising the first one or more instruction sets for operating the device correlated with the first stream of collections of object representations. In further embodiments, the executing the first one or more instruction sets for operating the device correlated with the first stream of collections of object representations includes transmitting, to a processor circuit for execution, the first one or more instruction sets for operating the device correlated with the first stream of collections of object representations. In further embodiments, the executing the first one or more instruction sets for operating the device correlated with the first stream of collections of object representations includes issuing an interrupt to a processor circuit and executing the first one or more instruction sets for operating the device correlated with the first stream of collections of object representations following the interrupt. In further embodiments, the executing the first one or more instruction sets for operating the device correlated with the first stream of collections of object representations includes modifying an element that is part of, operating on, or coupled to a processor circuit.

In certain embodiments, the executing the first one or more instruction sets for operating the device correlated with the first stream of collections of object representations includes executing, by a logic circuit, the first one or more instruction sets for operating the device correlated with the first stream of collections of object representations. In further embodiments, the logic circuit includes a microcontroller. In further embodiments, the executing, by the logic circuit, the first one or more instruction sets for operating the device correlated with the first stream of collections of object representations includes modifying an element of the logic circuit. In further embodiments, the executing, by the logic circuit, the first one or more instruction sets for operating the device correlated with the first stream of collections of object representations includes inserting the first one or more instruction sets for operating the device correlated with the first stream of collections of object representations into an element of the logic circuit. In further embodiments, the executing, by the logic circuit, the first one or more instruction sets for operating the device correlated with the first stream of collections of object represen-

tations includes redirecting the logic circuit to the first one or more instruction sets for operating the device correlated with the first stream of collections of object representations. In further embodiments, the executing, by the logic circuit, the first one or more instruction sets for operating the device correlated with the first stream of collections of object representations includes replacing inputs into the logic circuit with the first one or more instruction sets for operating the device correlated with the first stream of collections of object representations. In further embodiments, the executing, by the logic circuit, the first one or more instruction sets for operating the device correlated with the first stream of collections of object representations includes replacing outputs from the logic circuit with the first one or more instruction sets for operating the device correlated with the first stream of collections of object representations.

In some embodiments, the executing the first one or more instruction sets for operating the device correlated with the first stream of collections of object representations includes executing, by an application for operating the device, the first one or more instruction sets for operating the device correlated with the first stream of collections of object representations. In further embodiments, the executing the first one or more instruction sets for operating the device correlated with the first stream of collections of object representations includes modifying an application, the application including instruction sets for operating the device. In further embodiments, the executing the first one or more instruction sets for operating the device correlated with the first stream of collections of object representations includes redirecting an application to the first one or more instruction sets for operating the device correlated with the first stream of collections of object representations. In further embodiments, the executing the first one or more instruction sets for operating the device correlated with the first stream of collections of object representations includes redirecting an application to one or more alternate instruction sets, the alternate instruction sets comprising the first one or more instruction sets for operating the device correlated with the first stream of collections of object representations. In further embodiments, the executing the first one or more instruction sets for operating the device correlated with the first stream of collections of object representations includes modifying one or more instruction sets of an application. In further embodiments, the executing the first one or more instruction sets for operating the device correlated with the first stream of collections of object representations includes modifying a source code, a bytecode, an intermediate code, a compiled code, an interpreted code, a translated code, a runtime code, an assembly code, or a machine code. In further embodiments, the executing the first one or more instruction sets for operating the device correlated with the first stream of collections of object representations includes modifying at least one of: the memory unit, a register of a processor circuit, a storage, or a repository where instruction sets are stored or used. In further embodiments, the executing the first one or more instruction sets for operating the device correlated with the first stream of collections of object representations includes modifying one or more instruction sets for operating an application or an object of the application. In further embodiments, the executing the first one or more instruction sets for operating the device correlated with the first stream of collections of object representations includes modifying at least one of: an element of a processor circuit, an element of the device, a virtual machine, a runtime engine, an operating system, an execution stack, a program counter, or a user input. In further embodiments, the executing the first one or more instruction sets for operating the device correlated with the first stream of collections of object representations includes modifying one or more instruction sets at a source code write time, a compile time, an interpretation time, a translation time, a linking time, a loading time, or a runtime. In further embodiments, the executing the first one or more instruction sets for operating the device correlated with the first stream of collections of object representations includes modifying one or more code segments, lines of code, statements, instructions, functions, routines, subroutines, or basic blocks. In further embodiments, the executing the first one or more instruction sets for operating the device correlated with the first stream of collections of object representations includes a manual, an automatic, a dynamic, or a just in time (JIT) instrumentation of an application. In further embodiments, the executing the first one or more instruction sets for operating the device correlated with the first stream of collections of object representations includes utilizing one or more of a .NET tool, a .NET application programming interface (API), a Java tool, a Java API, an operating system tool, or an independent tool for modifying instruction sets. In further embodiments, the executing the first one or more instruction sets for operating the device correlated with the first stream of collections of object representations includes utilizing at least one of: a dynamic, an interpreted, or a scripting programming language. In further embodiments, the executing the first one or more instruction sets for operating the device correlated with the first stream of collections of object representations includes utilizing at least one of: a dynamic code, a dynamic class loading, or a reflection. In further embodiments, the executing the first one or more instruction sets for operating the device correlated with the first stream of collections of object representations includes utilizing an assembly language. In further embodiments, the executing the first one or more instruction sets for operating the device correlated with the first stream of collections of object representations includes utilizing at least one of: a metaprogramming, a self-modifying code, or an instruction set modification tool. In further embodiments, the executing the first one or more instruction sets for operating the device correlated with the first stream of collections of object representations includes utilizing at least one of: just in time (JIT) compiling, JIT interpretation, JIT translation, dynamic recompiling, or binary rewriting. In further embodiments, the executing the first one or more instruction sets for operating the device correlated with the first stream of collections of object representations includes utilizing at least one of: a dynamic expression creation, a dynamic expression execution, a dynamic function creation, or a dynamic function execution. In further embodiments, the executing the first one or more instruction sets for operating the device correlated with the first stream of collections of object representations includes adding or inserting additional code into a code of an application. In further embodiments, the executing the first one or more instruction sets for operating the device correlated with the first stream of collections of object representations includes at least one of: modifying, removing, rewriting, or overwriting a code of an application. In further embodiments, the executing the first one or more instruction sets for operating the device correlated with the first stream of collections of object representations includes at least one of: branching, redirecting, extending, or hot swapping a code of an application. The branching or redirecting the code may include inserting at least one of: a branch, a jump, or a means for redirecting an execution. In further embodiments, the

executing the first one or more instruction sets for operating the device correlated with the first stream of collections of object representations includes implementing a user's knowledge, style, or methodology of operating the device in a circumstance. In further embodiments, the executing the first one or more instruction sets for operating the device correlated with the first stream of collections of object representations includes executing the first one or more instruction sets for operating the device correlated with the first stream of collections of object representations via an interface. The interface may include a modification interface.

In certain embodiments, the operations of the non-transitory computer storage medium and/or the method further comprise: receiving at least one extra information. In further embodiments, the operations of the non-transitory computer storage medium and/or the method further comprise: learning the first stream of collections of object representations correlated with the at least one extra information.

In some embodiments, the operations of the non-transitory computer storage medium and/or the method further comprise: presenting, via a user interface, a user with an option to execute the first one or more instruction sets for operating the device correlated with the first stream of collections of object representations.

In certain embodiments, the operations of the non-transitory computer storage medium and/or the method further comprise: receiving, via a user interface, a user's selection to execute the first one or more instruction sets for operating the device correlated with the first stream of collections of object representations.

In some embodiments, the operations of the non-transitory computer storage medium and/or the method further comprise: rating the executed first one or more instruction sets for operating the device correlated with the first stream of collections of object representations.

In certain embodiments, the operations of the non-transitory computer storage medium and/or the method further comprise: presenting, via a user interface, a user with an option to cancel the execution of the executed first one or more instruction sets for operating the device correlated with the first stream of collections of object representations.

In some embodiments, the operations of the non-transitory computer storage medium and/or the method further comprise: receiving, via an input device, a user's operating directions, the user's operating directions for instructing a processor circuit on how to operate the device.

In certain embodiments, the operations of the non-transitory computer storage medium and/or the method further comprise: receiving a second stream of collections of object representations, the second stream of collections of object representations including one or more collections of representations of objects detected by the sensor; receiving a second one or more instruction sets for operating the device; and learning the second stream of collections of object representations correlated with the second one or more instruction sets for operating the device.

In some aspects, the disclosure relates to a non-transitory computer storage medium having a computer program stored thereon, the program including instructions that when executed by one or more processor circuits cause the one or more processor circuits to perform operations comprising: receiving, by a first processor circuit of the one or more processor circuits, a first stream of collections of object representations, the first stream of collections of object representations including one or more collections of representations of objects detected by a sensor. The operations may further comprise: receiving, by the first processor circuit of the one or more processor circuits, a first one or more instruction sets for operating a device. The operations may further comprise: learning, by the first processor circuit of the one or more processor circuits, the first stream of collections of object representations correlated with the first one or more instruction sets for operating the device. The operations may further comprise: receiving, by the first processor circuit of the one or more processor circuits, a new stream of collections of object representations, the new stream of collections of object representations including one or more collections of representations of objects detected by the sensor. The operations may further comprise: anticipating, by the first processor circuit of the one or more processor circuits, the first one or more instruction sets for operating the device correlated with the first stream of collections of object representations based on at least a partial match between the new stream of collections of object representations and the first stream of collections of object representations. The operations may further comprise: causing, by the first processor circuit of the one or more processor circuits, an execution, by a second processor circuit of the one or more processor circuits, of the first one or more instruction sets for operating the device correlated with the first stream of collections of object representations, the causing performed in response to the anticipating, by the first processor circuit of the one or more processor circuits, the first one or more instruction sets for operating the device correlated with the first stream of collections of object representations based on at least a partial match between the new stream of collections of object representations and the first stream of collections of object representations, wherein the device performs one or more operations defined by the first one or more instruction sets for operating the device correlated with the first stream of collections of object representations, the one or more operations by the device performed in response to the execution.

In some aspects, the disclosure relates to a method comprising: (a) receiving a first stream of collections of object representations by a first processor circuit, the first stream of collections of object representations including one or more collections of representations of objects detected by a sensor. The method may further comprise: (b) receiving a first one or more instruction sets for operating a device by the first processor circuit. The method may further comprise: (c) learning the first stream of collections of object representations correlated with the first one or more instruction sets for operating the device, the learning of (c) performed by the first processor circuit. The method may further comprise: (d) receiving a new stream of collections of object representations by the first processor circuit, the new stream of collections of object representations including one or more collections of representations of objects detected by the sensor. The method may further comprise: (e) anticipating the first one or more instruction sets for operating the device correlated with the first stream of collections of object representations based on at least a partial match between the new stream of collections of object representations and the first stream of collections of object representations, the anticipating of (e) performed by the first processor circuit. The method may further comprise: (f) executing, by a second processor circuit, the first one or more instruction sets for operating the device correlated with the first stream of collections of object representations, the executing of (f) performed in response to the anticipating of (e). The method may further comprise: (g) performing, by the device, one or more operations defined by the first one or more instruction

sets for operating the device correlated with the first stream of collections of object representations, the one or more operations by the device performed in response to the executing of (f).

The operations or steps of the non-transitory computer storage medium and/or the method may be performed by any of the elements of the above described systems as applicable. The non-transitory computer storage medium and/or the method may include any of the operations, steps, and embodiments of the above described systems, non-transitory computer storage media, and/or methods as applicable.

In some aspects, the disclosure relates to a system for learning a device's circumstances for autonomous device operating. The system may be implemented at least in part on one or more computing devices. In some embodiments, the system comprises: a processor circuit configured to execute instruction sets for operating a device. The system may further comprise: a memory unit configured to store data. The system may further comprise: a sensor configured to detect objects. The system may further comprise: an artificial intelligence unit. The artificial intelligence unit may be configured to: receive a first stream of collections of object representations, the first stream of collections of object representations including one or more collections of representations of objects detected by the sensor. The artificial intelligence unit may be further configured to: receive a first one or more instruction sets for operating the device. The artificial intelligence unit may be further configured to: learn the first stream of collections of object representations correlated with the first one or more instruction sets for operating the device.

In some aspects, the disclosure relates to a non-transitory computer storage medium having a computer program stored thereon, the program including instructions that when executed by one or more processor circuits cause the one or more processor circuits to perform operations comprising: receiving a first stream of collections of object representations, the first stream of collections of object representations including one or more collections of representations of objects detected by a sensor. The operations may further comprise: receiving a first one or more instruction sets for operating a device. The operations may further comprise: learning the first stream of collections of object representations correlated with the first one or more instruction sets for operating the device.

In some aspects, the disclosure relates to a non method comprising: (a) receiving a first stream of collections of object representations by a processor circuit, the first stream of collections of object representations including one or more collections of representations of objects detected by a sensor. The method may further comprise: (b) receiving a first one or more instruction sets for operating a device by the processor circuit. The method may further comprise: (c) learning the first stream of collections of object representations correlated with the first one or more instruction sets for operating the device, the learning of (c) performed by the processor circuit.

The operations or steps of the non-transitory computer storage medium and/or the method may be performed by any of the elements of the above described systems as applicable. The non-transitory computer storage medium and/or the method may include any of the operations, steps, and embodiments of the above described systems, non-transitory computer storage media, and/or methods as applicable.

In some aspects, the disclosure relates to a system for using a device's circumstances for autonomous device operating. The system may be implemented at least in part on one or more computing devices. In some embodiments, the system comprises: a processor circuit configured to execute instruction sets for operating a device. The system may further comprise: a memory unit configured to store data. The system may further comprise: a sensor configured to detect objects. The system may further comprise: an artificial intelligence unit. The artificial intelligence unit may be configured to: access the memory unit that comprises a plurality of streams of collections of object representations correlated with one or more instruction sets for operating the device, the plurality of streams of collections of object representations correlated with one or more instruction sets for operating the device including a first stream of collections of object representations correlated with a first one or more instruction sets for operating the device. The artificial intelligence unit may be further configured to: receive a new stream of collections of object representations, the new stream of collections of object representations including one or more collections of representations of objects detected by the sensor. The artificial intelligence unit may be further configured to: anticipate the first one or more instruction sets for operating the device correlated with the first stream of collections of object representations based on at least a partial match between the new stream of collections of object representations and the first stream of collections of object representations. The artificial intelligence unit may be further configured to: cause the processor circuit to execute the first one or more instruction sets for operating the device correlated with the first stream of collections of object representations, the causing performed in response to the anticipating of the artificial intelligence unit, wherein the device performs one or more operations defined by the first one or more instruction sets for operating the device correlated with the first stream of collections of object representations, the one or more operations performed in response to the executing by the processor circuit.

In some aspects, the disclosure relates to a non-transitory computer storage medium having a computer program stored thereon, the program including instructions that when executed by one or more processor circuits cause the one or more processor circuits to perform operations comprising: accessing a memory unit that comprises a plurality of streams of collections of object representations correlated with one or more instruction sets for operating a device, the plurality of streams of collections of object representations correlated with one or more instruction sets for operating the device including a first stream of collections of object representations correlated with a first one or more instruction sets for operating the device. The operations may further comprise: receiving a new stream of collections of object representations, the new stream of collections of object representations including one or more collections of representations of objects detected by a sensor. The operations may further comprise: anticipating the first one or more instruction sets for operating the device correlated with the first stream of collections of object representations based on at least a partial match between the new stream of collections of object representations and the first stream of collections of object representations. The operations may further comprise: causing an execution of the first one or more instruction sets for operating the device correlated with the first stream of collections of object representations, the causing performed in response to the anticipating the first one or more instruction sets for operating the device corre-

lated with the first stream of collections of object representations based on at least a partial match between the new stream of collections of object representations and the first stream of collections of object representations, wherein the device performs one or more operations defined by the first one or more instruction sets for operating the device correlated with the first stream of collections of object representations, the one or more operations by the device performed in response to the execution.

In some aspects, the disclosure relates to a method comprising: (a) accessing a memory unit that comprises a plurality of streams of collections of object representations correlated with one or more instruction sets for operating a device, the plurality of streams of collections of object representations correlated with one or more instruction sets for operating the device including a first stream of collections of object representations correlated with a first one or more instruction sets for operating the device, the accessing of (a) performed by a processor circuit. The method may further comprise: (b) receiving a new stream of collections of object representations by the processor circuit, the new stream of collections of object representations including one or more collections of representations of objects detected by a sensor. The method may further comprise: (c) anticipating the first one or more instruction sets for operating the device correlated with the first stream of collections of object representations based on at least a partial match between the new stream of collections of object representations and the first stream of collections of object representations, the anticipating of (c) performed by the processor circuit. The method may further comprise: (d) executing the first one or more instruction sets for operating the device correlated with the first stream of collections of object representations, the executing of (d) performed in response to the anticipating of (c). The method may further comprise: (e) performing, by the device, one or more operations defined by the first one or more instruction sets for operating the device correlated with the first stream of collections of object representations, the one or more operations by the device performed in response to the executing of (d).

The operations or steps of the non-transitory computer storage medium and/or the method may be performed by any of the elements of the above described systems as applicable. The non-transitory computer storage medium and/or the method may include any of the operations, steps, and embodiments of the above described systems, non-transitory computer storage media, and/or methods as applicable.

In some aspects, the disclosure relates to a system for learning and using a device's circumstances for autonomous device operating. The system may be implemented at least in part on one or more computing devices. In some embodiments, the system comprises: a logic circuit configured to receive inputs and produce outputs, wherein the outputs are used for operating a device. The system may further comprise: a memory unit configured to store data. The system may further comprise: a sensor configured to detect objects. The system may further comprise: an artificial intelligence unit. The artificial intelligence unit may be configured to: receive a first collection of object representations, the first collection of object representations including one or more representations of objects detected by the sensor. The artificial intelligence unit may be further configured to: receive a first one or more inputs, wherein the first one or more inputs are also received by the logic circuit. The artificial intelligence unit may be further configured to: learn the first collection of object representations correlated with the first one or more inputs. The artificial intelligence unit may be further configured to: receive a new collection of object representations, the new collection of object representations including one or more representations of objects detected by the sensor. The artificial intelligence unit may be further configured to: anticipate the first one or more inputs correlated with the first collection of object representations based on at least a partial match between the new collection of object representations and the first collection of object representations. The artificial intelligence unit may be further configured to: cause the logic circuit to receive the first one or more inputs correlated with the first collection of object representations, the causing performed in response to the anticipating of the artificial intelligence unit, wherein the device performs one or more operations defined by one or more outputs for operating the device produced by the logic circuit.

In some embodiments, the logic circuit configured to receive inputs and produce outputs includes a logic circuit configured to produce outputs based at least in part on logic operations performed on the inputs. In further embodiments, the learning the first collection of object representations correlated with the first one or more inputs includes correlating the first collection of object representations with the first one or more inputs. In further embodiments, the learning the first collection of object representations correlated with the first one or more inputs includes storing the first collection of object representations correlated with the first one or more inputs into the memory unit, the first collection of object representations correlated with the first one or more inputs being part of a plurality of collections of object representations correlated with one or more inputs stored in the memory unit. In further embodiments, the anticipating the first one or more inputs correlated with the first collection of object representations based on at least a partial match between the new collection of object representations and the first collection of object representations includes comparing at least one portion of the new collection of object representations with at least one portion of the first collection of object representations. In further embodiments, the anticipating the first one or more inputs correlated with the first collection of object representations based on at least a partial match between the new collection of object representations and the first collection of object representations includes determining that there is at least a partial match between the new collection of object representations and the first collection of object representations. In further embodiments, the causing the logic circuit to receive the first one or more inputs correlated with the first collection of object representations includes transmitting, to the logic circuit, the first one or more inputs correlated with the first collection of object representations. In further embodiments, the causing the logic circuit to receive the first one or more inputs correlated with the first collection of object representations includes replacing one or more inputs into the logic circuit with the first one or more inputs correlated with the first collection of object representations.

In some aspects, the disclosure relates to a non-transitory computer storage medium having a computer program stored thereon, the program including instructions that when executed by one or more processor circuits cause the one or more processor circuits to perform operations comprising: receiving a first collection of object representations, the first collection of object representations including one or more representations of objects detected by a sensor. The operations may further comprise: receiving a first one or more inputs, wherein the first one or more inputs are also received

by a logic circuit, and wherein the logic circuit is configured to receive inputs and produce outputs, and wherein the outputs are used for operating a device. The operations may further comprise: learning the first collection of object representations correlated with the first one or more inputs. The operations may further comprise: receiving a new collection of object representations, the new collection of object representations including one or more representations of objects detected by the sensor. The operations may further comprise: anticipating the first one or more inputs correlated with the first collection of object representations based on at least a partial match between the new collection of object representations and the first collection of object representations. The operations may further comprise: causing the logic circuit to receive the first one or more inputs correlated with the first collection of object representations, the causing performed in response to the anticipating the first one or more inputs correlated with the first collection of object representations based on at least a partial match between the new collection of object representations and the first collection of object representations, wherein the device performs one or more operations defined by one or more outputs for operating the device produced by the logic circuit.

In some aspects, the disclosure relates to a method comprising: (a) receiving a first collection of object representations by a processor circuit, the first collection of object representations including one or more representations of objects detected by a sensor. The method may further comprise: (b) receiving a first one or more inputs by the processor circuit, wherein the first one or more inputs are also received by a logic circuit, and wherein the logic circuit is configured to receive inputs and produce outputs, and wherein the outputs are used for operating a device. The method may further comprise: (c) learning the first collection of object representations correlated with the first one or more inputs, the learning of (c) performed by the processor circuit. The method may further comprise: (d) receiving a new collection of object representations by the processor circuit, the new collection of object representations including one or more representations of objects detected by the sensor. The method may further comprise: (e) anticipating the first one or more inputs correlated with the first collection of object representations based on at least a partial match between the new collection of object representations and the first collection of object representations, the anticipating of (e) performed by the processor circuit. The method may further comprise: (f) receiving, by the logic circuit, the first one or more inputs correlated with the first collection of object representations, the receiving of (f) performed in response to the anticipating of (e). The method may further comprise: (g) performing, by the device, one or more operations defined by one or more outputs for operating the device produced by the logic circuit.

The operations or steps of the non-transitory computer storage medium and/or the method may be performed by any of the elements of the above described systems as applicable. The non-transitory computer storage medium and/or the method may include any of the operations, steps, and embodiments of the above described systems, non-transitory computer storage media, and/or methods as applicable.

In some aspects, the disclosure relates to a system for learning and using a device's circumstances for autonomous device operating. The system may be implemented at least in part on one or more computing devices. In some embodiments, the system comprises: a logic circuit configured to receive inputs and produce outputs, wherein the outputs are used for operating a device. The system may further comprise: a memory unit configured to store data. The system may further comprise: a sensor configured to detect objects. The system may further comprise: an artificial intelligence. The artificial intelligence unit may be configured to: receive a first collection of object representations, the first collection of object representations including one or more representations of objects detected by the sensor. The artificial intelligence unit may be further configured to: receive a first one or more outputs, the first one or more outputs transmitted from the logic circuit. The artificial intelligence unit may be further configured to: learn the first collection of object representations correlated with the first one or more outputs. The artificial intelligence unit may be further configured to: receive a new collection of object representations, the new collection of object representations including one or more representations of objects detected by the sensor. The artificial intelligence unit may be further configured to: anticipate the first one or more outputs correlated with the first collection of object representations based on at least a partial match between the new collection of object representations and the first collection of object representations. The artificial intelligence unit may be further configured to: cause the device to perform one or more operations defined by the first one or more outputs correlated with the first collection of object representations, the causing performed in response to the anticipating of the artificial intelligence unit.

In some embodiments, the learning the first collection of object representations correlated with the first one or more outputs includes correlating the first collection of object representations with the first one or more outputs. In further embodiments, the learning the first collection of object representations correlated with the first one or more outputs includes storing the first collection of object representations correlated with the first one or more outputs into the memory unit, the first collection of object representations correlated with the first one or more outputs being part of a plurality of collections of object representations correlated with one or more outputs stored in the memory unit. In further embodiments, the anticipating the first one or more outputs correlated with the first collection of object representations based on at least a partial match between the new collection of object representations and the first collection of object representations includes comparing at least one portion of the new collection of object representations with at least one portion of the first collection of object representations. In further embodiments, the anticipating the first one or more outputs correlated with the first collection of object representations based on at least a partial match between the new collection of object representations and the first collection of object representations includes determining that there is at least a partial match between the new collection of object representations and the first collection of object representations. In further embodiments, the causing the device to perform one or more operations defined by the first one or more outputs correlated with the first collection of object representations includes replacing one or more outputs from the logic circuit with the first one or more outputs correlated with the first collection of object representations.

In some aspects, the disclosure relates to a non-transitory computer storage medium having a computer program stored thereon, the program including instructions that when executed by one or more processor circuits cause the one or more processor circuits to perform operations comprising: receiving a first collection of object representations, the first collection of object representations including one or more representations of objects detected by a sensor. The opera-

tions may further comprise: receiving a first one or more outputs, the first one or more outputs transmitted from a logic circuit, wherein the logic circuit is configured to receive inputs and produce outputs, and wherein the outputs are used for operating a device. The operations may further comprise: learning the first collection of object representations correlated with the first one or more outputs. The operations may further comprise: receiving a new collection of object representations, the new collection of object representations including one or more representations of objects detected by the sensor. The operations may further comprise: anticipating the first one or more outputs correlated with the first collection of object representations based on at least a partial match between the new collection of object representations and the first collection of object representations. The operations may further comprise: causing the device to perform one or more operations defined by the first one or more outputs correlated with the first collection of object representations, the causing performed in response to the anticipating the first one or more outputs correlated with the first collection of object representations based on at least a partial match between the new collection of object representations and the first collection of object representations.

In some aspects, the disclosure relates to a method comprising: (a) receiving a first collection of object representations by a processor circuit, the first collection of object representations including one or more representations of objects detected by a sensor. The method may further comprise: (b) receiving a first one or more outputs by the processor circuit, the first one or more outputs transmitted from a logic circuit, wherein the logic circuit is configured to receive inputs and produce outputs, and wherein the outputs are used for operating a device. The method may further comprise: (c) learning the first collection of object representations correlated with the first one or more outputs, the learning of (c) performed by the processor circuit. The method may further comprise: (d) receiving a new collection of object representations by the processor circuit, the new collection of object representations including one or more representations of objects detected by the sensor. The method may further comprise: (e) anticipating the first one or more outputs correlated with the first collection of object representations based on at least a partial match between the new collection of object representations and the first collection of object representations, the anticipating of (e) performed by the processor circuit. The method may further comprise: (f) performing, by the device, one or more operations defined by the first one or more outputs correlated with the first collection of object representations, the one or more operations by the device performed in response to the anticipating of (e).

The operations or steps of the non-transitory computer storage medium and/or the method may be performed by any of the elements of the above described systems as applicable. The non-transitory computer storage medium and/or the method may include any of the operations, steps, and embodiments of the above described systems, non-transitory computer storage media, and/or methods as applicable.

In some aspects, the disclosure relates to a system for learning and using a device's circumstances for autonomous device operating. The system may be implemented at least in part on one or more computing devices. In some embodiments, the system comprises: an actuator configured to receive inputs and perform motions. The system may further comprise: a memory unit configured to store data. The system may further comprise: a sensor configured to detect objects. The system may further comprise: an artificial intelligence unit. The artificial intelligence unit may be configured to: receive a first collection of object representations, the first collection of object representations including one or more representations of objects detected by the sensor. The artificial intelligence unit may be further configured to: receive a first one or more inputs, wherein the first one or more inputs are also received by the actuator. The artificial intelligence unit may be further configured to: learn the first collection of object representations correlated with the first one or more inputs. The artificial intelligence unit may be further configured to: receive a new collection of object representations, the new collection of object representations including one or more representations of objects detected by the sensor. The artificial intelligence unit may be further configured to: anticipate the first one or more inputs correlated with the first collection of object representations based on at least a partial match between the new collection of object representations and the first collection of object representations. The artificial intelligence unit may be further configured to: cause the actuator to receive the first one or more inputs correlated with the first collection of object representations, the causing performed in response to the anticipating of the artificial intelligence unit, wherein the actuator performs one or more motions defined by the first one or more inputs correlated with the first collection of object representations.

In some aspects, the disclosure relates to a non-transitory computer storage medium having a computer program stored thereon, the program including instructions that when executed by one or more processor circuits cause the one or more processor circuits to perform operations comprising: receiving a first collection of object representations, the first collection of object representations including one or more representations of objects detected by a sensor. The operations may further comprise: receiving a first one or more inputs, wherein the first one or more inputs are also received by an actuator, and wherein the actuator is configured to receive inputs and perform motions. The operations may further comprise: learning the first collection of object representations correlated with the first one or more inputs. The operations may further comprise: receiving a new collection of object representations, the new collection of object representations including one or more representations of objects detected by the sensor. The operations may further comprise: anticipating the first one or more inputs correlated with the first collection of object representations based on at least a partial match between the new collection of object representations and the first collection of object representations. The operations may further comprise: causing the actuator to receive the first one or more inputs correlated with the first collection of object representations, the causing performed in response to the anticipating the first one or more inputs correlated with the first collection of object representations based on at least a partial match between the new collection of object representations and the first collection of object representations, wherein the actuator performs one or more motions defined by the first one or more inputs correlated with the first collection of object representations.

In some aspects, the disclosure relates to a method comprising: (a) receiving a first collection of object representations by a processor circuit, the first collection of object representations including one or more representations of objects detected by a sensor. The method may further comprise: (b) receiving a first one or more inputs by the processor circuit, wherein the first one or more inputs are also received by an actuator, and wherein the actuator is

configured to receive inputs and perform motions. The method may further comprise: (c) learning the first collection of object representations correlated with the first one or more inputs, the learning of (c) performed by the processor circuit. The method may further comprise: (d) receiving a new collection of object representations by the processor circuit, the new collection of object representations including one or more representations of objects detected by the sensor. The method may further comprise: (e) anticipating the first one or more inputs correlated with the first collection of object representations based on at least a partial match between the new collection of object representations and the first collection of object representations, the anticipating of (e) performed by the processor circuit. The method may further comprise: (f) receiving, by the actuator, the first one or more inputs correlated with the first collection of object representations, the receiving of (f) performed in response to the anticipating of (e). The method may further comprise: (g) performing, by the actuator, one or more motions defined by the first one or more inputs correlated with the first collection of object representations.

The operations or steps of the non-transitory computer storage medium and/or the method may be performed by any of the elements of the above described systems as applicable. The non-transitory computer storage medium and/or the method may include any of the operations, steps, and embodiments of the above described systems, non-transitory computer storage media, and/or methods as applicable.

Other features and advantages of the disclosure will become apparent from the following description, including the claims and drawings.

BRIEF DESCRIPTION OF THE DRAWINGS

FIG. **1** illustrates a block diagram of Computing Device **70** that can provide processing capabilities used in some of the disclosed embodiments.

FIG. **2** illustrates an embodiment of Device **98** comprising Unit for Learning and/or Using a Device's Circumstances for Autonomous Device Operation (DCADO Unit **100**).

FIGS. **3**A-**3**E illustrate various embodiments of Sensors **92** and elements of Object Processing Unit **93**.

FIGS. **4**A-**4**B, illustrate an exemplary embodiment of Objects **615** detected in Device's **98** surrounding, and resulting Collection of Object Representations **525**.

FIG. **5** illustrates some embodiments of obtaining instruction sets, data, and/or other information through tracing, profiling, or sampling of Processor **11** registers, memory, or other computing system components.

FIGS. **6**A-**6**B illustrate some embodiments of obtaining instruction sets, data, and/or other information through tracing, profiling, or sampling of Logic Circuit **250**.

FIGS. **7**A-**7**E illustrate some embodiments of Instruction Sets **526**.

FIGS. **8**A-**8**B illustrate some embodiments of Extra Information **527**.

FIG. **9** illustrates an embodiment where DCADO Unit **100** is part of or operating on Processor **11**.

FIG. **10** illustrates an embodiment where DCADO Unit **100** resides on Server **96** accessible over Network **95**.

FIG. **11** illustrates an embodiment of learning and/or using Remote Device's **97** circumstances for autonomous Remote Device **97** operation.

FIG. **12** illustrates an embodiment of Artificial Intelligence Unit **110**.

FIG. **13** illustrates an embodiment of Knowledge Structuring Unit **520** correlating individual Collections of Object Representations **525** with any Instruction Sets **526** and/or Extra Info **527**.

FIG. **14** illustrates another embodiment of Knowledge Structuring Unit **520** correlating individual Collections of Object Representations **525** with any Instruction Sets **526** and/or Extra Info **527**.

FIG. **15** illustrates an embodiment of Knowledge Structuring Unit **520** correlating streams of Collections of Object Representations **525** with any Instruction Sets **526** and/or Extra Info **527**.

FIG. **16** illustrates another embodiment of Knowledge Structuring Unit **520** correlating streams of Collections of Object Representations **525** with any Instruction Sets **526** and/or Extra Info **527**.

FIG. **17** illustrates various artificial intelligence methods, systems, and/or models that can be utilized in DCADO Unit **100** embodiments.

FIG. **18**A-**18**C illustrate embodiments of interconnected Knowledge Cells **800** and updating weights of Connections **853**.

FIG. **19** illustrates an embodiment of learning Knowledge Cells **800** comprising one or more Collections of Object Representations **525** correlated with any Instruction Sets **526** and/or Extra Info **527** using Collection of Knowledge Cells **530***d*.

FIG. **20** illustrates an embodiment of learning Knowledge Cells **800** comprising one or more Collections of Object Representations **525** correlated with any Instruction Sets **526** and/or Extra Info **527** using Neural Network **530***a*.

FIG. **21** illustrates an embodiment of learning Knowledge Cells **800** comprising one or more Collections of Object Representations **525** correlated with any Instruction Sets **526** and/or Extra Info **527** using Neural Network **530***a* comprising shortcut Connections **853**.

FIG. **22** illustrates an embodiment of learning Knowledge Cells **800** comprising one or more Collections of Object Representations **525** correlated with any Instruction Sets **526** and/or Extra Info **527** using Graph **530***b*.

FIG. **23** illustrates an embodiment of learning Knowledge Cells **800** comprising one or more Collections of Object Representations **525** correlated with any Instruction Sets **526** and/or Extra Info **527** using Collection of Sequences **530***c*.

FIG. **24** illustrates an embodiment of determining anticipatory Instruction Sets **526** from a single Knowledge Cell **800**.

FIG. **25** illustrates an embodiment of determining anticipatory Instruction Sets **526** by traversing a single Knowledge Cell **800**.

FIG. **26** illustrates an embodiment of determining anticipatory Instruction Sets **526** using collective similarity comparisons.

FIG. **27** illustrates an embodiment of determining anticipatory Instruction Sets **526** using Neural Network **530***a*.

FIG. **28** illustrates an embodiment of determining anticipatory Instruction Sets **526** using Graph **530***b*.

FIG. **29** illustrates an embodiment of determining anticipatory Instruction Sets **526** using Collection of Sequences **530***c*.

FIG. **30** illustrates some embodiments of modifying execution and/or functionality of Processor **11** through modification of Processor **11** registers, memory, or other computing system components.

FIGS. **31**A-**31**B illustrate some embodiments of modifying execution and/or functionality of Logic Circuit **250** through modification of inputs and/or outputs of Logic Circuit **250**.

FIG. **32** illustrates a flow chart diagram of an embodiment of method **9100** for learning and/or using a device's circumstances for autonomous device operation.

FIG. **33** illustrates a flow chart diagram of an embodiment of method **9200** for learning and/or using a device's circumstances for autonomous device operation.

FIG. **34** illustrates a flow chart diagram of an embodiment of method **9300** for learning and/or using a device's circumstances for autonomous device operation.

FIG. **35** illustrates a flow chart diagram of an embodiment of method **9400** for learning and/or using a device's circumstances for autonomous device operation.

FIG. **36** illustrates a flow chart diagram of an embodiment of method **9500** for learning and/or using a device's circumstances for autonomous device operation.

FIG. **37** illustrates a flow chart diagram of an embodiment of method **9600** for learning and/or using a device's circumstances for autonomous device operation.

FIG. **38** illustrates an exemplary embodiment of Loader **98***a*.

FIG. **39** illustrates an exemplary embodiment of Boat **98***b*.

FIG. **40** illustrates an exemplary embodiment of utilizing Area of Interest **450** around Boat **98***b*.

Like reference numerals in different figures indicate like elements. Horizontal or vertical " . . . " or other such indicia may be used to indicate additional instances of the same type of element. n, m, x, or other such letters or indicia represent integers or other sequential numbers that follow the sequence where they are indicated. It should be noted that n, m, x, or other such letters or indicia may represent different numbers in different elements even where the elements are depicted in the same figure. In general, n, m, x, or other such letters or indicia may follow the sequence and/or context where they are indicated. Any of these or other such letters or indicia may be used interchangeably depending on context and space available. The drawings are not necessarily to scale, with emphasis instead being placed upon illustrating the embodiments, principles, and concepts of the disclosure. A line or arrow between any of the disclosed elements comprises an interface that enables the coupling, connection, and/or interaction between the elements.

DETAILED DESCRIPTION

The disclosed artificially intelligent devices, systems, and methods for learning and/or using a device's circumstances for autonomous device operation comprise apparatuses, systems, methods, features, functionalities, and/or applications that enable learning a device's circumstances including objects with various properties along with correlated instruction sets for operating the device, storing this knowledge in a knowledgebase (i.e. neural network, graph, sequences, etc.), and operating a device autonomously. The disclosed artificially intelligent devices, systems, and methods for learning and/or using a device's circumstances for autonomous device operation, any of their elements, any of their embodiments, or a combination thereof can generally be referred to as DCADO, DCADO Unit, or as other suitable name or reference.

Referring now to FIG. **1**, an embodiment is illustrated of Computing Device **70** (also referred to simply as computing device, computing system, or other suitable name or reference, etc.) that can provide processing capabilities used in some embodiments of the forthcoming disclosure. Later described devices, systems, and methods, in combination with processing capabilities of Computing Device **70**, enable learning and/or using a device's circumstances for autonomous device operation and/or other functionalities described herein. Various embodiments of the disclosed devices, systems, and methods include hardware, functions, logic, programs, and/or a combination thereof that can be implemented using any type or form of computing, computing enabled, or other device or system such as a mobile device, a computer, a computing enabled telephone, a server, a gaming device, a television device, a digital camera, a GPS receiver, a media player, an embedded device, a supercomputer, a wearable device, an implantable device, a cloud, or any other type or form of computing, computing enabled, or other device or system capable of performing the operations described herein.

In some designs, Computing Device **70** comprises hardware, processing techniques or capabilities, programs, or a combination thereof. Computing Device **70** includes one or more central processing units, which may also be referred to as processors **11**. Processor **11** includes one or more memory ports **10** and/or one or more input-output ports, also referred to as I/O ports **15**, such as I/O ports **15**A and **15**B. Processor **11** may be special or general purpose. Computing Device **70** may further include memory **12**, which can be connected to the remainder of the components of Computing Device **70** via bus **5**. Memory **12** can be connected to processor **11** via memory port **10**. Computing Device **70** may also include display device **21** such as a monitor, projector, glasses, and/or other display device. Computing Device **70** may also include Human-machine Interface **23** such as a keyboard, a pointing device, a mouse, a touchscreen, a joystick, a remote controller, and/or other input device. In some implementations, Human-machine Interface **23** can be connected with bus **5** or directly connected with specific elements of Computing Device **70**. Computing Device **70** may include additional elements such as one or more input/output devices **13**. Processor **11** may include or be interfaced with cache memory **14**. Storage **27** may include memory, which provides an operating system **17** (i.e. also referred to as OS **17**, etc.), additional application programs **18**, and/or data space **19** in which additional data or information can be stored. Alternative memory device **16** can be connected to the remaining components of Computing Device **70** via bus **5**. Network interface **25** can also be connected with bus **5** and be used to communicate with external computing devices via a network. Some or all described elements of Computing Device **70** can be directly or operatively connected or coupled with each other using any other connection means known in art. Other additional elements may be included as needed, or some of the disclosed ones may be excluded, or a combination thereof may be utilized in alternate implementations of Computing Device **70**.

Processor **11** includes one or more circuits or devices that can execute instructions fetched from memory **12** and/or other element. Processor **11** may include any combination of hardware and/or processing techniques or capabilities for executing or implementing logic functions or programs. Processor **11** may include a single core or a multi core processor. Processor **11** includes the functionality for loading operating system **17** and operating any application programs **18** thereon. In some embodiments, Processor **11** can be provided in a microprocessing or a processing unit, such as, for example, Snapdragon processor produced by Qualcomm Inc., processor by Intel Corporation of Mountain View, Calif., processor manufactured by Motorola Corpo-

ration of Schaumburg, Ill.; processor manufactured by Transmeta Corporation of Santa Clara, Calif.; processor manufactured by International Business Machines of White Plains, N.Y.; processor manufactured by Advanced Micro Devices of Sunnyvale, Calif., or any computing circuit or device for performing similar functions. In other embodiments, processor **11** can be provided in a graphics processing unit (GPU), visual processing unit (VPU), or other highly parallel processing circuit or device such as, for example, nVidia GeForce line of GPUs, AMD Radeon line of GPUs, and/or others. Such GPUs or other highly parallel processing circuits or devices may provide superior performance in processing operations on neural networks, graphs, and/or other data structures. In further embodiments, processor **11** can be provided in a micro controller such as, for example, Texas instruments, Atmel, Microchip Technology, ARM, Silicon Labs, Intel, and/or other lines of micro controllers. In further embodiments, processor **11** can be provided in a quantum processor such as, for example, D-Wave Systems, Microsoft, Intel, IBM, Google, Toshiba, and/or other lines of quantum processors. In further embodiments, processor **11** can be provided in a biocomputer such as DNA-based computer, protein-based computer, molecule-based computer, and/or others. In further embodiments, processor **11** includes any circuit or device for performing logic operations. Processor **11** can be based on any of the aforementioned or other available processors capable of operating as described herein. Computing Device **70** may include one or more of the aforementioned or other processors. In some designs, processor **11** can communicate with memory **12** via a system bus **5**. In other designs, processor **11** can communicate directly with memory **12** via a memory port **10**.

Memory **12** includes one or more circuits or devices capable of storing data. In some embodiments, Memory **12** can be provided in a semiconductor or electronic memory chip such as static random access memory (SRAM), Flash memory, Burst SRAM or SynchBurst SRAM (BSRAM), Dynamic random access memory (DRAM), Fast Page Mode DRAM (FPM DRAM), Enhanced DRAM (EDRAM), Extended Data Output RAM (EDO RAM), Extended Data Output DRAM (EDO DRAM), Burst Extended Data Output DRAM (BEDO DRAM), Enhanced DRAM (EDRAM), synchronous DRAM (SDRAM), JEDEC SRAM, PC100 SDRAM, Double Data Rate SDRAM (DDR SDRAM), Enhanced SDRAM (ESDRAM), SyncLink DRAM (SLDRAM), Direct Rambus DRAM (DRDRAM), Ferroelectric RAM (FRAM), and/or others. In other embodiments, Memory **12** includes any volatile memory. In general, Memory **12** can be based on any of the aforementioned or other available memories capable of operating as described herein.

Storage **27** includes one or more devices or mediums capable of storing data. In some embodiments, Storage **27** can be provided in a device or medium such as a hard drive, flash drive, optical disk, and/or others. In other embodiments, Storage **27** can be provided in a biological storage device such as DNA-based storage device, protein-based storage device, molecule-based storage device, and/or others. In further embodiments, Storage **27** can be provided in an optical storage device such as holographic storage, and/or others. In further embodiments, Storage **27** may include any non-volatile memory. In general, Storage **27** can be based on any of the aforementioned or other available storage devices or mediums capable of operating as described herein. In some aspects, Storage **27** may include any features, functionalities, and embodiments of Memory **12**, and vice versa, as applicable.

Processor **11** can communicate directly with cache memory **14** via a connection means such as a secondary bus which may also sometimes be referred to as a backside bus. In some embodiments, processor **11** can communicate with cache memory **14** using the system bus **5**. Cache memory **14** may typically have a faster response time than main memory **12** and can include a type of memory which is considered faster than main memory **12** such as, for example, SRAM, BSRAM, or EDRAM. Cache memory includes any structure such as multilevel caches, for example. In some embodiments, processor **11** can communicate with one or more I/O devices **13** via a system bus **5**. Various busses can be used to connect processor **11** to any of the I/O devices **13** such as a VESA VL bus, an ISA bus, an EISA bus, a MicroChannel Architecture (MCA) bus, a PCI bus, a PCI-X bus, a PCI-Express bus, a NuBus, and/or others. In some embodiments, processor **11** can communicate directly with I/O device **13** via HyperTransport, Rapid I/O, or InfiniBand. In further embodiments, local busses and direct communication can be mixed. For example, processor **11** can communicate with an I/O device **13** using a local interconnect bus and communicate with another I/O device **13** directly. Similar configurations can be used for any other components described herein.

Computing Device **70** may further include alternative memory such as a SD memory slot, a USB memory stick, an optical drive such as a CD-ROM drive, a CD-R/RW drive, a DVD-ROM drive or a BlueRay disc, a hard-drive, and/or any other device comprising non-volatile memory suitable for storing data or installing application programs. Computing Device **70** may further include a storage device **27** comprising any type or form of non-volatile memory for storing an operating system (OS) such as any type or form of Windows OS, Mac OS, Unix OS, Linux OS, Android OS, iPhone OS, mobile version of Windows OS, an embedded OS, or any other OS that can operate on Computing Device **70**. Computing Device **70** may also include application programs **18**, and/or data space **19** for storing additional data or information. In some embodiments, alternative memory **16** can be used as or similar to storage device **27**. Additionally, OS **17** and/or application programs **18** can be operable from a bootable medium such as, for example, a flash drive, a micro SD card, a bootable CD or DVD, and/or other bootable medium.

Application Program **18** (also referred to as program, computer program, application, script, code, or other suitable name or reference) comprises instructions that can provide functionality when executed by processor **11**. As such, Application Program **18** may be used to operate (i.e. perform operations on/with) or control a device or system. Application program **18** can be implemented in a high-level procedural or object-oriented programming language, or in a low-level machine or assembly language. Any language used can be compiled, interpreted, or otherwise translated into machine language. Application program **18** can be deployed in any form including as a stand-alone program or as a module, component, subroutine, or other unit suitable for use in a computing system. Application program **18** does not necessarily correspond to a file in a file system. A program can be stored in a portion of a file that may hold other programs or data, in a single file dedicated to the program, or in multiple files (i.e. files that store one or more modules, sub programs, or portions of code, etc.). Application Program **18** can be delivered in various forms such as, for example, executable file, library, script, plugin, addon, applet, interface, console application, web application, application service provider (ASP)-type application, operating system, and/or other forms. Application program **18**

can be deployed to be executed on one computing device or on multiple computing devices (i.e. cloud, distributed, or parallel computing, etc.), or at one site or distributed across multiple sites interconnected by a communication network or an interface.

Network interface **25** can be utilized for interfacing Computing Device **70** with other devices via a network through a variety of connections including telephone lines, wired or wireless connections, LAN or WAN links (i.e. 802.11, T1, T3, 56 kb, X.25, etc.), broadband connections (i.e. ISDN, Frame Relay, ATM, etc.), or a combination thereof. Examples of networks include the Internet, an intranet, an extranet, a local area network (LAN), a wide area network (WAN), a personal area network (PAN), a home area network (HAN), a campus area network (CAN), a metropolitan area network (MAN), a global area network (GAN), a storage area network (SAN), virtual network, a virtual private network (VPN), a Bluetooth network, a wireless network, a wireless LAN, a radio network, a HomePNA, a power line communication network, a G.hn network, an optical fiber network, an Ethernet network, an active networking network, a client-server network, a peer-to-peer network, a bus network, a star network, a ring network, a mesh network, a star-bus network, a tree network, a hierarchical topology network, and/or other networks. Network interface **25** may include a built-in network adapter, network interface card, PCMCIA network card, card bus network adapter, wireless network adapter, Bluetooth network adapter, WiFi network adapter, USB network adapter, modem, and/or any other device suitable for interfacing Computing Device **70** with any type of network capable of communication and/or operations described herein.

I/O devices **13** may be present in various shapes or forms in Computing Device **70**. Examples of I/O device **13** capable of input include a joystick, a keyboard, a mouse, a trackpad, a trackpoint, a touchscreen, a trackball, a microphone, a drawing tablet, a glove, a tactile input device, a still or video camera, and/or other input device. Examples of I/O device **13** capable of output include a video display, a touchscreen, a projector, a glasses, a speaker, a tactile output device, and/or other output device. Examples of I/O device **13** capable of input and output include a disk drive, an optical storage device, a modem, a network card, and/or other input/output device. I/O device **13** can be interfaced with processor **11** via an I/O port **15**, for example. In some aspects, I/O device **13** can be a bridge between system bus **5** and an external communication bus such as a USB bus, an Apple Desktop Bus, an RS-232 serial connection, a SCSI bus, a FireWire bus, a FireWire 800 bus, an Ethernet bus, an AppleTalk bus, a Gigabit Ethernet bus, an Asynchronous Transfer Mode bus, a HIPPI bus, a Super HIPPI bus, a SerialPlus bus, a SCI/LAMP bus, a FibreChannel bus, a Serial Attached small computer system interface bus, and/or other bus.

An output interface (not shown) such as a graphical user interface, an acoustic output interface, a tactile output interface, any device driver (i.e. audio, video, or other driver), and/or other output interface or system can be utilized to process output from elements of Computing Device **70** for conveyance on an output device such as Display **21**. In some aspects, Display **21** or other output device itself may include an output interface for processing output from elements of Computing Device **70**. Further, an input interface (not shown) such as a keyboard listener, a touchscreen listener, a mouse listener, any device driver (i.e. audio, video, keyboard, mouse, touchscreen, or other driver), and/or other input interface or system can be utilized to process input from Human-machine Interface **23** or other input device for use by elements of Computing Device **70**. In some aspects, Human-machine Interface **23** or other input device itself may include an input interface for processing input for use by elements of Computing Device **70**.

Computing Device **70** may include or be connected to multiple display devices **21**. Display devices **21** can each be of the same or different type or form. Computing Device **70** and/or its elements comprise any type or form of suitable hardware, programs, or a combination thereof to support, enable, or provide for the connection and use of multiple display devices **21**. In one example, Computing Device **70** includes any type or form of video adapter, video card, driver, and/or library to interface, communicate, connect, or otherwise use display devices **21**. In some aspects, a video adapter may include multiple connectors to interface to multiple display devices **21**. In other aspects, Computing Device **70** includes multiple video adapters, with each video adapter connected to one or more display devices **21**. In some embodiments, Computing Device's **70** operating system can be configured for using multiple displays **21**. In other embodiments, one or more display devices **21** can be provided by one or more other computing devices such as remote computing devices connected to Computing Device **70** via a network or an interface.

Computing Device **70** can operate under the control of operating system **17**, which may support Computing Device's **70** basic functions, interface with and manage hardware resources, interface with and manage peripherals, provide common services for application programs, schedule tasks, and/or perform other functionalities. A modern operating system enables features and functionalities such as a high resolution display, graphical user interface (GUI), touchscreen, cellular network connectivity (i.e. mobile operating system, etc.), Bluetooth connectivity, WiFi connectivity, global positioning system (GPS) capabilities, mobile navigation, microphone, speaker, still picture camera, video camera, voice recorder, speech recognition, music player, video player, near field communication, personal digital assistant (PDA), and/or other features, functionalities, or applications. For example, Computing Device **70** can use any conventional operating system, any embedded operating system, any real-time operating system, any open source operating system, any video gaming operating system, any proprietary operating system, any online operating system, any operating system for mobile computing devices, or any other operating system capable of running on Computing Device **70** and performing operations described herein. Example of operating systems include Windows XP, Windows 7, Windows 8, Windows 10, etc. manufactured by Microsoft Corporation of Redmond, Wash.; Mac OS, iPhone OS, etc. manufactured by Apple Computer of Cupertino, Calif.; OS/2 manufactured by International Business Machines of Armonk, N.Y.; Linux, a freely-available operating system distributed by Caldera Corp. of Salt Lake City, Utah; or any type or form of a Unix operating system, and/or others. Any operating systems such as the ones for Android devices can similarly be utilized.

Computing Device **70** can be implemented as or be part of various model architectures such as web services, distributed computing, grid computing, cloud computing, and/or other architectures. For example, in addition to the traditional desktop, server, or mobile operating system architectures, a cloud-based operating system can be utilized to provide the structure on which embodiments of the disclosure can be implemented. Other aspects of Computing

Device **70** can also be implemented in the cloud without departing from the spirit and scope of the disclosure. For example, memory, storage, processing, and/or other elements can be hosted in the cloud. In some embodiments, Computing Device **70** can be implemented on multiple devices. For example, a portion of Computing Device **70** can be implemented on a mobile device and another portion can be implemented on wearable electronics.

Computing Device **70** can be or include any mobile device, a mobile phone, a smartphone (i.e. iPhone, Windows phone, Blackberry phone, Android phone, etc.), a tablet, a personal digital assistant (PDA), wearable electronics, implantable electronics, and/or other mobile device capable of implementing the functionalities described herein. Computing Device **70** can also be or include an embedded device, which can be any device or system with a dedicated function within another device or system. Embedded systems range from the simplest ones dedicated to one task with no user interface to complex ones with advanced user interface that may resemble modern desktop computer systems. Examples of devices comprising an embedded device include a mobile telephone, a personal digital assistant (PDA), a gaming device, a media player, a digital still or video camera, a pager, a television device, a set-top box, a personal navigation device, a global positioning system (GPS) receiver, a portable storage device (i.e. a USB flash drive, etc.), a digital watch, a DVD player, a printer, a microwave oven, a washing machine, a dishwasher, a gateway, a router, a hub, an automobile entertainment system, an automobile navigation system, a refrigerator, a washing machine, a factory automation device, an assembly line device, a factory floor monitoring device, a thermostat, an automobile, a factory controller, a telephone, a network bridge, and/or other devices. An embedded device can operate under the control of an operating system for embedded devices such as MicroC/OS-II, QNX, VxWorks, eCos, TinyOS, Windows Embedded, Embedded Linux, and/or other embedded device operating systems.

Various implementations of the disclosed devices, systems, and methods can be realized in digital electronic circuitry, integrated circuitry, logic gates, application specific integrated circuits (ASICs), field programmable gate arrays (FPGAs), computer hardware, firmware, programs, virtual machines, and/or combinations thereof including their structural, logical, and/or physical equivalents.

The disclosed devices, systems, and methods may include clients and servers. A client and server are generally, but not always, remote from each other and typically, but not always, interact via a network or an interface. The relationship of a client and server may arise by virtue of computer programs running on their respective computers and having a client-server relationship to each other, for example.

The disclosed devices, systems, and methods can be implemented in a computing system that includes a back end component, a middleware component, a front end component, or any combination thereof. The components of the system can be interconnected by any form or medium of digital data communication such as, for example, a network.

Computing Device **70** may include or be interfaced with a computer program product comprising instructions or logic encoded on a computer-readable medium. Such instructions or logic, when executed, may configure or cause one or more processors to perform the operations and/or functionalities disclosed herein. For example, a computer program can be provided or encoded on a computer-readable medium such as an optical medium (i.e. DVD-ROM, etc.), flash drive, hard drive, any memory, firmware, or other medium. Computer program can be installed onto a computing device to cause the computing device to perform the operations and/or functionalities disclosed herein. Machine-readable medium, computer-readable medium, or other such terms may refer to any computer program product, apparatus, and/or device for providing instructions and/or data to one or more programmable processors. As such, machine-readable medium includes any medium that can send and/or receive machine instructions as a machine-readable signal. Examples of a machine-readable medium include a volatile and/or non-volatile medium, a removable and/or non-removable medium, a communication medium, a storage medium, and/or other medium. A communication medium, for example, can transmit computer readable instructions and/or data in a modulated data signal such as a carrier wave or other transport technique, and may include any other form of information delivery medium known in art. A non-transitory machine-readable medium comprises all machine-readable media except for a transitory, propagating signal.

In some embodiments, the disclosed artificially intelligent devices, systems, and methods for learning and/or using a device's circumstances for autonomous device operation, or elements thereof, can be implemented entirely or in part in a device (i.e. microchip, circuitry, logic gates, electronic device, computing device, special or general purpose processor, etc.) or system that comprises (i.e. hard coded, internally stored, etc.) or is provided with (i.e. externally stored, etc.) instructions for implementing DCADO functionalities. As such, the disclosed artificially intelligent devices, systems, and methods for learning and/or using a device's circumstances for autonomous device operation, or elements thereof, may include the processing, memory, storage, and/or other features, functionalities, and embodiments of Computing Device **70** or elements thereof. Such device or system can operate on its own (i.e. standalone device or system, etc.), be embedded in another device or system (i.e. an industrial machine, a robot, a vehicle, a toy, a smartphone, a television device, an appliance, and/or any other device or system capable of housing the elements needed for DCADO functionalities), work in combination with other devices or systems, or be available in any other configuration. In other embodiments, the disclosed artificially intelligent devices, systems, and methods for learning and/or using a device's circumstances for autonomous device operation, or elements thereof, may include Alternative Memory **16** that provides instructions for implementing DCADO functionalities to one or more Processors **11**. In further embodiments, the disclosed artificially intelligent devices, systems, and methods for learning and/or using a device's circumstances for autonomous device operation, or elements thereof, can be implemented entirely or in part as a computer program and executed by one or more Processors **11**. Such program can be implemented in one or more modules or units of a single or multiple computer programs. Such program may be able to attach to or interface with, inspect, and/or take control of another application program to implement DCADO functionalities. In further embodiments, the disclosed artificially intelligent devices, systems, and methods for learning and/or using a device's circumstances for autonomous device operation, or elements thereof, can be implemented as a network, web, distributed, cloud, or other such application accessed on one or more remote computing devices (i.e. servers, cloud, etc.) via Network Interface **25**, such remote computing devices including processing capabilities and instructions for implementing DCADO functionalities. In further embodiments, the disclosed artificially intelligent devices, systems, and

methods for learning and/or using a device's circumstances for autonomous device operation, or elements thereof, can be (1) attached to or interfaced with any computing device or application program, (2) included as a feature of an operating system, (3) built (i.e. hard coded, etc.) into any computing device or application program, and/or (4) available in any other configuration to provide its functionalities.

In some embodiments, the disclosed artificially intelligent devices, systems, and methods for learning and/or using a device's circumstances for autonomous device operation, or elements thereof, can be implemented at least in part in a computer program such as Java application or program. Java provides a robust and flexible environment for application programs including flexible user interfaces, robust security, built-in network protocols, powerful application programming interfaces, database or DBMS connectivity and interfacing functionalities, file manipulation capabilities, support for networked applications, and/or other features or functionalities. Application programs based on Java can be portable across many devices, yet leverage each device's native capabilities. Java supports the feature sets of most smartphones and a broad range of connected devices while still fitting within their resource constraints. Various Java platforms include virtual machine features comprising a runtime environment for application programs. Java platforms provide a wide range of user-level functionalities that can be implemented in application programs such as displaying text and graphics, playing and recording audio content, displaying and recording visual content, communicating with another computing device, and/or other functionalities. It should be understood that the disclosed artificially intelligent devices, systems, and methods for learning and/or using a device's circumstances for autonomous device operation, or elements thereof, are programming language, platform, and operating system independent. Examples of programming languages that can be used instead of or in addition to Java include C, C++, Cobol, Python, Java Script, Tcl, Visual Basic, Pascal, VB Script, Perl, PHP, Ruby, and/or other programming languages capable of implementing the functionalities described herein.

Where a reference to a specific file or file type is used herein, other files or file types can be substituted.

Where a reference to a data structure is used herein, it should be understood that any variety of data structures can be used such as, for example, array, list, linked list, doubly linked list, queue, tree, heap, graph, map, grid, matrix, multi-dimensional matrix, table, database, database management system (DBMS), file, neural network, and/or any other type or form of a data structure including a custom one. A data structure may include one or more fields or data fields that are part of or associated with the data structure. A field or data field may include a data, an object, a data structure, and/or any other element or a reference/pointer thereto. A data structure can be stored in one or more memories, files, or other repositories. A data structure and/or elements thereof, when stored in a memory, file, or other repository, may be stored in a different arrangement than the arrangement of the data structure and/or elements thereof. For example, a sequence of elements can be stored in an arrangement other than a sequence in a memory, file, or other repository.

Where a reference to a repository is used herein, it should be understood that a repository may be or include one or more files or file systems, one or more storage locations or structures, one or more storage systems, one or more memory locations or structures, and/or other file, storage, memory, or data arrangements.

Where a reference to an interface is used herein, it should be understood that the interface comprises any hardware, device, system, program, method, and/or combination thereof that enable direct or operative coupling, connection, and/or interaction of the elements between which the interface is indicated. A line or arrow shown in the figures between any of the depicted elements comprises such interface. Examples of an interface include a direct connection, an operative connection, a wired connection (i.e. wire, cable, etc.), a wireless connection, a device, a network, a bus, a circuit, a firmware, a driver, a bridge, a program, a combination thereof, and/or others.

Where a reference to an element coupled or connected to another element is used herein, it should be understood that the element may be in communication or other interactive relationship with the other element. Furthermore, an element coupled or connected to another element can be coupled or connected to any other element in alternate implementations. Terms coupled, connected, interfaced, or other such terms may be used interchangeably herein depending on context.

Where a reference to an element matching another element is used herein, it should be understood that the element may be equivalent or similar to the other element. Therefore, the term match or matching can refer to total equivalence or similarity depending on context.

Where a reference to a device is used herein, it should be understood that the device may include or be referred to as a system, and vice versa depending on context, since a device may include a system of elements and a system may be embodied in a device.

Where a reference to a collection of elements is used herein, it should be understood that the collection of elements may include one or more elements. In some aspects or contexts, a reference to a collection of elements does not imply that the collection is an element itself.

Where a reference to an object is used herein, it should be understood that the object may be a physical object (i.e. object detected in a device's surrounding, etc.), an electronic object (i.e. object in an object oriented application program, etc.), and/or other object depending on context.

Where a mention of a function, method, routine, subroutine, or other such procedure is used herein, it should be understood that the function, method, routine, subroutine, or other such procedure comprises a call, reference, or pointer to the function, method, routine, subroutine, or other such procedure.

Where a mention of data, object, data structure, item, element, or thing is used herein, it should be understood that the data, object, data structure, item, element, or thing comprises a reference or pointer to the data, object, data structure, item, element, or thing.

Referring to FIG. **2**, an embodiment of Device **98** comprising Unit for Learning and/or Using a Device's Circumstances for Autonomous Device Operation (DCADO Unit **100**) is illustrated. Device **98** also comprises interconnected Processor **11**, Human-machine Interface **23**, Sensor **92**, Object Processing Unit **93**, Memory **12**, and Storage **27**. Processor **11** includes or executes Application Program **18**. DCADO Unit **100** comprises interconnected Artificial Intelligence Unit **110**, Acquisition Interface **120**, and Modification Interface **130**. Other additional elements can be included as needed, or some of the disclosed ones can be excluded, or a combination thereof can be utilized in alternate embodiments.

In one example, the teaching presented by the disclosure can be implemented in a device or system for learning and/or using a device's circumstances for autonomous device operation. The device or system may include a processor circuit (i.e. Processor **11**, etc.) configured to execute instruction sets (i.e. Instruction Sets **526**, etc.) for operating a device. The device or system may further include a memory unit (i.e. Memory **12**, etc.) configured to store data. The device or system may further include a sensor (i.e. Sensor **92**, etc.) configured to detect objects (i.e. Objects **615**, etc.). The device or system may further include an artificial intelligence unit (i.e. Artificial Intelligence Unit **110**, etc.). The artificial intelligence unit may be configured to receive a first collection of object representations (i.e. Collection of Object Representations **525**, etc.), the first collection of object representations including one or more representations of objects detected by the sensor. The artificial intelligence unit may also be configured to receive a first one or more instruction sets for operating the device. The artificial intelligence unit may also be configured to learn the first collection of object representations correlated with the first one or more instruction sets for operating the device. The artificial intelligence unit may also be configured to receive a new collection of object representations, the new collection of object representations including one or more representations of objects detected by the sensor. The artificial intelligence unit may also be configured to anticipate the first one or more instruction sets for operating the device correlated with the first collection of object representations based on at least a partial match between the new collection of object representations and the first collection of object representations. The artificial intelligence unit may also be configured to cause the processor circuit to execute the first one or more instruction sets for operating the device correlated with the first collection of object representations, the causing performed in response to the anticipating of the artificial intelligence unit, wherein the device performs one or more operations defined by the first one or more instruction sets for operating the device correlated with the first collection of object representations, the one or more operations performed in response to the executing by the processor circuit. Any of the operations of the aforementioned elements can be performed repeatedly and/or in different orders in alternate embodiments. In some embodiments, a stream of collections of object representations can be used instead of or in addition to any collection of object representations such as, for example, using a first stream of collections of object representations instead of the first collection of object representations. In other embodiments, a logic circuit (i.e. Logic Circuit **250**, etc.) may be used instead of the processor circuit. In such embodiments, one or more instruction sets for operating the device (i.e. first one or more instruction sets for operating the device, etc.) may include or be substituted with one or more inputs into or one or more outputs from the logic circuit. In further embodiments, an actuator may be included instead of or in addition to the processor circuit. In such embodiments, one or more instruction sets for operating the device (i.e. first one or more instruction sets for operating the device, etc.) may include or be substituted with one or more inputs into the actuator. Other additional elements can be included as needed, or some of the disclosed ones can be excluded, or a combination thereof can be utilized in alternate embodiments. The device or system for learning and/or using a device's circumstances for autonomous device operation may include any actions or operations of any of the disclosed methods such as methods **9100**, **9200**, **9300**, **9400**, **9500**, **9600**, and/or others (all later described).

Device **98** comprises any hardware, programs, or a combination thereof. Although, Device **98** is referred to as a device herein, Device **98** may be or include a system as a system may be embodied in Device **98**. Device **98** may include any features, functionalities, and embodiments of Computing Device **70**, or elements thereof. In some embodiments, Device **98** includes a computing enabled device for performing mechanical or physical operations (i.e. via actuators, etc.). In other embodiments, Device **98** includes a computing enabled device for performing non-mechanical and/or other operations. Examples of Device **98** include an industrial machine, a toy, a robot, a vehicle, an appliance, a control device, a smartphone or other mobile computer, any computer, and/or other computing enabled device or machine. Such device or machine may be built for any function or purpose some examples of which are described later.

User **50** (also referred to simply as user or other suitable name or reference) comprises a human user or non-human user. A non-human User **50** includes any device, system, program, and/or other mechanism for operating or controlling Device **98** and/or elements thereof. In one example, User **50** may issue an operating direction to Application Program **18** responsive to which Application Program's **18** instructions or instruction sets may be executed by Processor **11** to perform a desired operation on Device **98**. In another example, User **50** may issue an operating direction to Processor **11**, Logic Circuit **250** (later described), and/or other processing element responsive to which Processor **11**, Logic Circuit **250**, and/or other processing element may implement logic to perform a desired operation on Device **98**. User's **50** operating directions comprise any user inputted data (i.e. values, text, symbols, etc.), directions (i.e. move right, move up, move forward, copy an item, click on a link, etc.), instructions or instruction sets (i.e. manually inputted instructions or instruction sets, etc.), and/or other inputs or information. A non-human User **50** can utilize more suitable interfaces instead of, or in addition to, Human-machine Interface **23** and/or Display **21** for controlling Device **98** and/or elements thereof. Examples of such interfaces include an application programming interface (API), bridge (i.e. bridge between applications, devices, or systems, etc.), driver, socket, direct or operative connection, handle, function/routine/subroutine, and/or other interfaces.

In some embodiments, Processor **11**, Logic Circuit **250**, Application Program **18**, and/or other processing element may control or affect an actuator (not shown). Actuator comprises the functionality for implementing motion, actions, behaviors, maneuvers, and/or other mechanical or physical operations. Device **98** may include one or more actuators to enable Device **98** to perform mechanical, physical, or other operations and/or to interact with its environment. For example, an actuator may include or be coupled to an element such as a wheel, arm, or other element to act upon the environment. Examples of an actuator include a motor, a linear motor, a servomotor, a hydraulic element, a pneumatic element, an electro-magnetic element, a spring element, and/or other actuators. Examples of types of actuators include a rotary actuator, a linear actuator, and/or other types of actuators. In other embodiments, Processor **11**, Logic Circuit **250**, Application Program **18**, and/or other processing element may control or affect any other device or element instead of or in addition to an actuator.

Referring to FIGS. **3**A-**3**E, various embodiments of Sensors **92** and elements of Object Processing Unit **93** are illustrated.

Sensor **92** (also referred to simply as sensor or other suitable name or reference) comprises the functionality for obtaining or detecting information about its environment, and/or other functionalities. As such, one or more Sensors **92** can be used to detect objects and/or their properties in Device's **98** surrounding. In some aspects, Device's **98** surrounding may include exterior of Device **98**. In other aspects, Device's **98** surrounding may include interior of Device **98** in case of hollow Device **98**, Device **98** comprising compartments or openings, and/or other variously shaped Device **98**. Examples of aspects of an environment that Sensor **92** can measure or be sensitive to include light (i.e. camera, lidar, etc.), electromagnetism/electromagnetic field (i.e. radar, etc.), sound (i.e. microphone, sonar, etc.), physical contact (i.e. tactile sensor, etc.), magnetism/magnetic field (i.e. compass, etc.), electricity/electric field, temperature, gravity, vibration, pressure, and/or others. In some aspects, a passive sensor (i.e. camera, microphone, etc.) measures signals or radiation emitted or reflected by an object. In other aspects, an active sensor (i.e. lidar, radar, sonar, etc.) emits signals or radiation and measures the signals or radiation reflected or backscattered from an object. A reference to a Sensor **92** herein includes a reference to one or more Sensors **92** as applicable. In some designs, a plurality of Sensors **92** may be used to detect objects and/or their properties from different angles or sides of Device **98**. For example, four Cameras **92***a* can be placed on four corners of Device **98** to cover 360 degrees of view of Device's **98** surrounding. In other designs, a plurality of different types of Sensors **92** may be used to detect different types of objects and/or their properties. For example, one or more Cameras **92***a* can be used to detect and identify an object, whereas, Radar **92***d* can be used to determine distance and bearing/angle of the object relative to Device **98**. In further designs, a signal-emitting element can be placed within or onto an object and Sensor **92** can detect the signal from the signal-emitting element, thereby detecting the object and/or its properties. For example, a radio-frequency identification (RFID) emitter may be placed within an object to help Sensor **92** detect, identify, and/or obtain other information about the object.

In some embodiments, Sensor **92** may be or include Camera **92***a* as shown in FIG. **3**A. Camera **92***a* comprises the functionality for capturing one or more pictures, and/or other functionalities. As such, Camera **92***a* can be used to capture pictures of Device's **98** surrounding. Camera **92***a* may be useful in detecting existence of an object, type of an object, identity of an object, distance of an object, bearing/angle of an object, location of an object, shape/size of an object, activity of an object, and/or other properties of an object. In some aspects, Camera **92***a* may be or comprises a motion picture camera that can capture streams of pictures (i.e. motion pictures, videos, etc.). In other aspects, Camera **92***a* may be or comprises a still picture camera that can capture still pictures (i.e. photographs, etc.). In further aspects, Camera **92***a* may be or comprises a stereo camera (i.e. camera with multiple lenses, etc.) that can capture stereoscopic or range pictures. In further aspects, Camera **92***a* may be or comprises any other Camera **92***a*. In general, Camera **92***a* may capture any light (i.e. visible light, infrared light, ultraviolet light, x-ray light, etc.) across the electromagnetic spectrum onto a light-sensitive material. Any other technique known in art can be utilized to facilitate Camera **92***a* functionalities. In one example, a digital Camera **92***a* can utilize a charge coupled device (CCD), a complementary metal-oxide-semiconductor (CMOS) sensor, and/or other electronic image sensor to capture digital pictures that can then be stored in a memory or storage, or transmitted to any of the disclosed or other elements for further processing. In another example, analog Camera **92***a* can utilize an analog-to-digital converter to produce digital pictures. In some embodiments, Camera **92***a* can be built, embedded, or integrated in Device **98** and/or other disclosed element. In other embodiments, Camera **92***a* can be an external Camera **92***a* connected with Device **98** and/or other disclosed element. In further embodiments, Camera **92***a* comprises Computing Device **70** or elements thereof. In general, Camera **92***a* can be implemented in any suitable configuration to provide its functionalities. Camera **92***a* may capture one or more digital pictures. A digital picture may include a collection of color encoded pixels or dots. Examples of file formats that can be utilized to store a digital picture include JPEG, GIF, TIFF, PNG, PDF, and/or other digitally encoded picture formats. A stream of digital pictures (i.e. motion picture, video, etc.) may include one or more digital pictures. Examples of file formats that can be utilized to store a stream of digital pictures include MPEG, AVI, FLV, MOV, RM, SWF, WMV, DivX, and/or other digitally encoded motion picture formats.

In other embodiments, Sensor **92** may be or include Microphone **92***b* as shown in FIG. **3**B. Microphone **92***b* comprises the functionality for capturing one or more sounds, and/or other functionalities. As such, Microphone **92***b* can be used to capture sounds from Device's **98** surrounding. Microphone **92***b* may be useful in detecting existence of an object, type of an object, identity of an object, bearing/angle of an object, activity (i.e. motion, sounding, etc.) of an object, and/or other properties of an object. In some aspects, Microphone **92***b* may be omnidirectional microphone that enables capturing sounds from any direction. In other aspects, Microphone **92***b* may be a directional (i.e. unidirectional, bidirectional, etc.) microphone that enables capturing sounds from one or more directions while ignoring or being insensitive to sounds from other directions. In general, Microphone **92***b* may utilize a membrane sensitive to air pressure and may produce electrical signal from air pressure variations. Samples of the electrical signal can then be read to produce a stream of digital sound samples. Any other technique known in art can be utilized to facilitate Microphone **92***b* functionalities. In one example, a digital Microphone **92***b* may include an integrated analog-to-digital converter to capture a stream of digital sound samples that can then be stored in a memory or storage, or transmitted to any of the disclosed or other elements for further processing. In another example, analog Microphone **92***b* may utilize an external analog-to-digital converter to produce a stream of digital sound samples. In some embodiments, Microphone **92***b* can be built, embedded, or integrated in Device **98**. In other embodiments, Microphone **92***b* can be an external Microphone **92***b* connected with Device **98**. In further embodiments where used in water, Microphone **92***b* may be or include a hydrophone. In further embodiments, Microphone **92***b* comprises Computing Device **70** or elements thereof. In general, Microphone **92***b* can be implemented in any suitable configuration to provide its functionalities. Examples of file formats that can be utilized to store a stream of digital sound samples include WAV, WMA, AIFF, MP3, RA, OGG, and/or other digitally encoded sound formats.

In further embodiments, Sensor **92** may be or include Lidar **92***c* as shown in FIG. **3**C. Lidar **92***c* may be useful in

detecting existence of an object, type of an object, identity of an object, distance of an object, bearing/angle of an object, location of an object, shape/size of an object, activity of an object, and/or other properties of an object. In some aspects, Lidar **92***c* may emit a light signal (i.e. laser beam, etc.) and listen for a signal that is reflected or backscattered from an object. Any other technique known in art can be utilized to facilitate Lidar **92***c* functionalities.

In further embodiments, Sensor **92** may be or include a Radar **92***d* as shown in FIG. **3**D. Radar **92***d* may be useful in detecting existence of an object, type of an object, distance of an object, bearing/angle of an object, location of an object, shape/size of an object, activity of an object, and/or other properties of an object. In some aspects, Radar **92***d* may emit a radio signal (i.e. radio wave, etc.) and listen for a signal that is reflected or backscattered from an object. Any other technique known in art can be utilized to facilitate Radar **92***d* functionalities.

In further embodiments, Sensor **92** may be or include Sonar **92***e* as shown in FIG. **3**E. Sonar **92***e* may be useful in detecting existence of an object, type of an object, distance of an object, bearing/angle of an object, location of an object, shape/size of an object, activity of an object, and/or other properties of an object. In some aspects, Sonar **92***e* may emit a sound signal (i.e. sound pulse, etc.) and listen for a signal that is reflected or backscattered from an object. Any other technique known in art can be utilized to facilitate Sonar **92***e* functionalities.

One of ordinary skill in art will understand that the aforementioned sensors are described merely as examples of a variety of possible implementations, and that while all possible sensors are too voluminous to describe, other sensors known in art that can facilitate detecting of objects and/or their properties in Device's **98** surrounding are within the scope of this disclosure. Any combination of the aforementioned and/or other sensors can be used in various embodiments.

Object Processing Unit **93** comprises the functionality for processing output from Sensor **92** to obtain information of interest, and/or other functionalities. As such, Object Processing Unit **93** can be used to process output from Sensor **92** to detect objects and/or their properties in Device's **98** surrounding. In some embodiments, Object Processing Unit **93** comprises the functionality for creating or generating Collection of Object Representations **525** (also referred to as Coll of Obj Rep or other suitable name or reference) and storing one or more Object Representations **625** (also referred to simply as object representations, representations of objects, or other suitable name or reference), Object Properties **630** (also referred to simply as object properties or other suitable name or reference), and/or other elements or information into the Collection of Object Representations **525**. As such, Collection of Object Representations **525** comprises the functionality for storing one or more Object Representations **625**, Object Properties **630**, and/or other elements or information. Object Representation **625** may include an electronic representation of an object (i.e. Object **615** [later described], etc.) detected in Device's **98** surrounding. In some aspects, Collection of Object Representations **525** includes one or more Object Representations **625**, Object Properties **630**, and/or other elements or information related to objects detected in Device's **98** surrounding at a particular time. Collection of Object Representations **525** may, therefore, include knowledge (i.e. unit of knowledge, etc.) of Device's **98** circumstances including objects with various properties at a particular time. In some designs, a Collection of Object Representations **525** may include or be associated with a time stamp (not shown), order (not shown), or other time related information. For example, one Collection of Object Representations **525** may be associated with time stamp t**1**, another Collection of Object Representations **525** may be associated with time stamp t**2**, and so on. Time stamps t**1**, t**2**, etc. may indicate the times of generating Collections of Object Representations **525**, for instance. In other embodiments, Object Processing Unit **93** comprises the functionality for creating or generating a stream of Collections of Object Representations **525**. A stream of Collections of Object Representations **525** may include one Collection of Object Representations **525** or a group, sequence, or other plurality of Collections of Object Representations **525**. In some aspects, a stream of Collections of Object Representations **525** includes one or more Collections of Object Representations **525**, and/or other elements or information related to objects detected in Device's **98** surrounding over time. A stream of Collections of Object Representations **525** may, therefore, include knowledge (i.e. unit of knowledge, etc.) of Device's **98** circumstances including objects with various properties over time. As circumstances including objects with various properties in Device's **98** surrounding change (i.e. objects and/or their properties change, move, act, transform, etc.) over time, this change may be captured in a stream of Collections of Object Representations **525**. In some designs, each Collection of Object Representations **525** in a stream may include or be associated with the aforementioned time stamp, order, or other time related information. For example, one Collection of Object Representations **525** in a stream may be associated with order **1**, a next Collection of Object Representations **525** in the stream may be associated with order **2**, and so on. Orders **1**, **2**, etc. may indicate the orders or places of Collections of Object Representations **525** within a stream (i.e. sequence, etc.), for instance. Examples of objects include biological objects (i.e. persons, animals, vegetation, etc.), nature objects (i.e. rocks, bodies of water, etc.), manmade objects (i.e. buildings, streets, ground/aerial/aquatic vehicles, etc.), and/or others. In some aspects, any part of an object may be detected as an object itself. For instance, instead of or in addition to detecting a vehicle as an object, a wheel and/or other parts of the vehicle may be detected as objects. In general, object may include any object or part thereof that can be detected. Examples of object properties include existence of an object, type of an object (i.e. person, cat, vehicle, building, street, tree, rock, etc.), identity of an object (i.e. name, identifier, etc.), distance of an object, bearing/angle of an object, location of an object (i.e. distance and bearing/angle from a known point, coordinates, etc.), shape/size of an object (i.e. height, width, depth, computer model, point cloud, etc.), activity of an object (i.e. motion, gestures, etc.), and/or other properties of an object. Type of an object, for example, may include any classification of objects ranging from detailed such as person, cat, vehicle, building, street, tree, rock, etc. to generalized such as biological object, nature object, manmade object, etc., and/or others including their sub-types. Location of an object, for example, can include a relative location such as one defined by distance and bearing/angle from a known point or location (i.e. Device **98** location, etc.). Location of an object, for example, can also include absolute location such as one defined by object coordinates. In general, an object property may include any attribute of an object (i.e. existence of an object, type of an object, identity of an object, shape/size of an object, etc.), any relationship of an object with Device **98**, other objects, or the environment (i.e. distance of an object, bearing/angle of an object, friend/foe relationship, etc.),

and/or other information related to an object. In some implementations, Object Processing Unit **93** and/or any of its elements or functionalities can be included in Sensor **92**. In other implementations, Object Processing Unit **93** and/or any of its elements or functionalities can be embedded into or operate on Processor **11**. In further implementations, Object Processing Unit **93** and/or any of its elements or functionalities can be embedded into or operate in DCADO Unit **100**, and/or other disclosed elements. Object Processing Unit **93** may be provided in any suitable configuration. Object Processing Unit **93** may include any signal processing techniques or elements known in art as applicable.

In some embodiments, Object Processing Unit **93** may include Picture Recognizer **94***a* as shown in FIG. **3**A. Picture Recognizer **94***a* comprises the functionality for detecting or recognizing objects and/or their properties in visual data, and/or other disclosed functionalities. Visual data includes digital motion pictures, digital still pictures, and/or other visual data. Examples of file formats that can be utilized to store visual data include AVI, DivX, MPEG, JPEG, GIF, TIFF, PNG, PDF, and/or other file formats. For example, Picture Recognizer **94***a* can be used for detecting or recognizing objects and/or their properties in one or more digital pictures captured by one or more Cameras **92***a*. Picture Recognizer **94***a* can be utilized in detecting or recognizing existence of an object, type of an object, identity of an object, distance of an object, bearing/angle of an object, location of an object, shape/size of an object, activity of an object, and/or other properties of an object. In general, Picture Recognizer **94***a* can be used for any operation supported by Picture Recognizer **94***a*. Picture Recognizer **94***a* may detect or recognize an object and/or its properties as well as track the object and/or its properties in one or more digital pictures or streams of digital pictures (i.e. motion pictures, video, etc.). In the case of a person, Picture Recognizer **94***a* may detect or recognize a human head or face, upper body, full body, or portions/combinations thereof. In some aspects, Picture Recognizer **94***a* may detect or recognize objects and/or their properties from a digital picture by comparing regions of pixels from the digital picture with collections of pixels comprising known objects and/or their properties. The collections of pixels comprising known objects and/or their properties can be learned or manually, programmatically, or otherwise defined. The collections of pixels comprising known objects and/or their properties can be stored in any data structure or repository (i.e. one or more files, database, etc.) that resides locally on Device **98**, or remotely on a remote computing device (i.e. server, cloud, etc.) accessible over a network or an interface. In other aspects, Picture Recognizer **94***a* may detect or recognize objects and/or their properties from a digital picture by comparing features (i.e. lines, edges, ridges, corners, blobs, regions, etc.) of the digital picture with features of known objects and/or their properties. The features of known objects and/or their properties can be learned or manually, programmatically, or otherwise defined. The features of known objects and/or their properties can be stored in any data structure or repository (i.e. neural network, one or more files, database, etc.) that resides locally on Device **98**, or remotely on a remote computing device (i.e. server, cloud, etc.) accessible over a network or an interface. Typical steps or elements in a feature oriented picture recognition include pre-processing, feature extraction, detection/segmentation, decision-making, and/or others, or a combination thereof, each of which may include its own sub-steps or sub-elements depending on the application. In further aspects, Picture Recognizer **94***a* may detect or recognize multiple objects and/or their properties from a digital picture using the aforementioned pixel or feature comparisons, and/or other detection or recognition techniques. For example, a picture may depict two objects in two of its regions both of which Picture Recognizer **94***a* can detect simultaneously. In further aspects, where objects and/or their properties span multiple pictures, Picture Recognizer **94***a* may detect or recognize objects and/or their properties by applying the aforementioned pixel or feature comparisons and/or other detection or recognition techniques over a stream of digital pictures (i.e. motion picture, video, etc.). For example, once an object is detected in a digital picture (i.e. frame, etc.) of a stream of digital pictures (i.e. motion picture, video, etc.), the region of pixels comprising the detected object or the object's features can be searched in other pictures of the stream of digital pictures, thereby tracking the object through the stream of digital pictures. In further aspects, Picture Recognizer **94***a* may detect or recognize an object's activities by identifying and/or analyzing differences between a detected region of pixels of one picture (i.e. frame, etc.) and detected regions of pixels of other pictures in a stream of digital pictures. For example, a region of pixels comprising a person's face can be detected in multiple consecutive pictures of a stream of digital pictures (i.e. motion picture, video, etc.). Differences among the detected regions of the consecutive pictures may be identified in the mouth part of the person's face to indicate smiling or speaking activity. In further aspects, Picture Recognizer **94***a* may detect or recognize objects and/or their properties using one or more artificial neural networks, which may include statistical techniques. Examples of artificial neural networks that can be used in Picture Recognizer **94***a* include convolutional neural networks (CNNs), time delay neural networks (TDNNs), deep neural networks, and/or others. In one example, picture recognition techniques and/or tools involving convolutional neural networks may include identifying and/or analyzing tiled and/or overlapping regions or features of a digital picture, which may then be used to search for pictures with matching regions or features. In another example, features of different convolutional neural networks responsible for spatial and temporal streams can be fused to detect objects and/or their properties in streams of digital pictures (i.e. motion pictures, videos, etc.). In general, Picture Recognizer **94***a* may include any machine learning, deep learning, and/or other artificial intelligence techniques. In further aspects, Picture Recognizer **94***a* can detect distance of a recognized object in a picture captured by a camera using structured light, sheet of light, or other lighting schemes, and/or by using phase shift analysis, time of flight, interferometry, or other techniques. In further aspects, Picture Recognizer **94***a* may detect distance of a recognized object in a picture captured by a stereo camera by using triangulation and/or other techniques. In further aspects, Picture Recognizer **94***a* may detect bearing/angle of a recognized object relative to the camera-facing direction by measuring the distance from the vertical centerline of the picture to a pixel in the recognized object based on known picture resolution and camera's angle of view. Any other techniques known in art can be utilized in Picture Recognizer **94***a*. For example, thresholds for similarity, statistical techniques, and/or optimization techniques can be utilized to determine a match in any of the above-described detection or recognition techniques. In some exemplary embodiments, object recognition techniques and/or tools such as OpenCV (Open Source Computer Vision) library, CamFind API, Kooaba, 6px API, Dextro API, and/or others can be utilized for detecting or recognizing objects and/or their properties in

digital pictures. In some aspects, picture recognition techniques and/or tools involve identifying and/or analyzing features such as lines, edges, ridges, corners, blobs, regions, and/or their relative positions, sizes, shapes, etc., which may then be used to search for pictures with matching features. For example, OpenCV library can detect an object (i.e. person, animal, vehicle, rock, etc.) and/or its properties in one or more digital pictures captured by Camera **92***a* or stored in an electronic repository, which can then be utilized in DCADO Unit **100**, Artificial Intelligence Unit **110**, and/or other elements. In other exemplary embodiments, facial recognition techniques and/or tools such as OpenCV (Open Source Computer Vision) library, Animetrics FaceR API, Lambda Labs Facial Recognition API, Face++ SDK, Neven Vision (also known as N-Vision) Engine, and/or others can be utilized for detecting or recognizing faces in digital pictures. In some aspects, facial recognition techniques and/or tools involve identifying and/or analyzing facial features such as the relative position, size, and/or shape of the eyes, nose, cheekbones, jaw, etc., which may then be used to search for pictures with matching features. For example, FaceR API can detect a person's face in one or more digital pictures captured by Camera **92***a* or stored in an electronic repository, which can then be utilized in DCADO Unit **100**, Artificial Intelligence Unit **110**, and/or other elements.

Various aspects or properties of digital pictures or pixels can be taken into account by Picture Recognizer **94***a* in any of the recognizing or comparisons. Examples of such aspects or properties include color adjustment, size adjustment, content manipulation, transparency (i.e. alpha channel, etc.), use of mask, and/or others. In some implementations, as digital pictures can be captured by various picture taking equipment, in various environments, and under various lighting conditions, Picture Recognizer **94***a* can adjust lighting or color of pixels or otherwise manipulate pixels before or during comparison. Lighting or color adjustment (also referred to as gray balance, neutral balance, white balance, etc.) may generally include manipulating or rebalancing the intensities of the colors (i.e. red, green, and/or blue if RGB color model is used, etc.) of one or more pixels. For example, Picture Recognizer **94***a* can adjust lighting or color of some or all pixels of one picture to make it more comparable to another picture. Picture Recognizer **94***a* can also incrementally adjust the pixels such as increasing or decreasing the red, green, and/or blue pixel values by a certain amount in each cycle of comparisons in order to find a substantially similar match at one of the incremental adjustment levels. Any of the publically available, custom, or other lighting or color adjustment techniques or programs can be utilized such as color filters, color balancing, color correction, and/or others. In other implementations, Picture Recognizer **94***a* can resize or otherwise transform a digital picture before or during comparison. Such resizing or transformation may include increasing or decreasing the number of pixels of a digital picture. For example, Picture Recognizer **94***a* can increase or decrease the size of a digital picture proportionally (i.e. increase or decrease length and/or width keeping aspect ratio constant, etc.) to equate its size with the size of another digital picture. Picture Recognizer **94***a* can also incrementally resize a digital picture such as increasing or decreasing the size of the digital picture proportionally by a certain amount in each cycle of comparisons in order to find a substantially similar match at one of the incremental sizes. Any of the publically available, custom, or other digital picture resizing techniques or programs can be utilized such as nearest-neighbor interpolation, bilinear interpolation, bicubic interpolation, and/or others. In further implementations, Picture Recognizer **94***a* can manipulate content (i.e. all pixels, one or more regions, one or more depicted objects, etc.) of a digital picture before or during comparison. Such content manipulation may include moving, centering, aligning, resizing, transforming, and/or otherwise manipulating content of a digital picture. For example, Picture Recognizer **94***a* can move, center, or align content of one picture to make it more comparable to another picture. Any of the publically available, custom, or other digital picture manipulation techniques or programs can be utilized such as pixel moving, warping, distorting, aforementioned interpolations, and/or others. In further implementations, in digital pictures comprising transparency features or functionalities, Picture Recognizer **94***a* can utilize a threshold for acceptable number or percentage transparency difference. Alternatively, transparency can be applied to one or more pixels of a digital picture and color difference may then be determined between compared pixels taking into account the transparency related color effect. Alternatively, transparent pixels can be excluded from comparison. In further implementations, certain regions or subsets of pixels can be ignored or excluded during comparison using a mask. In general, any region or subset of a picture determined to contain no content of interest can be excluded from comparison using a mask. Examples of such regions or subsets include background, transparent or partially transparent regions, regions comprising insignificant content, or any arbitrary region or subset. Picture Recognizer **94***a* can perform any other pre-processing or manipulation of digital pictures or pixels before or during recognizing or comparison.

In other embodiments, Object Processing Unit **93** may include Sound Recognizer **94***b* as shown in FIG. **3**B. Sound Recognizer **94***b* comprises the functionality for detecting or recognizing objects and/or their properties in audio data, and/or other disclosed functionalities. Audio data includes digital sound, and/or other audio data. Examples of file formats that can be utilized to store audio data include WAV, WMA, AIFF, MP3, RA, OGG, and/or other file formats. For example, Sound Recognizer **94***b* can be used for detecting or recognizing objects and/or their properties in a stream of digital sound samples captured by one or more Microphones **92***b*. In the case of a person, Sound Recognizer **94***b* may detect or recognize human voice. Sound Recognizer **94***b* can be utilized in detecting or recognizing existence of an object, type of an object, identity of an object, bearing/angle of an object, activity (i.e. motion, sounding, etc.) of an object, and/or other properties of an object. In general, Sound Recognizer **94***b* can be used for any operation supported by Sound Recognizer **94***b*. In some aspects, Sound Recognizer **94***b* may detect or recognize an object and/or its properties from a stream of digital sound samples by comparing collections of sound samples from the stream of digital sound samples with collections of sound samples of known objects and/or their properties. The collections of sound samples of known objects and/or their properties can be learned, or manually, programmatically, or otherwise defined. The collections of sound samples of known objects and/or their properties can be stored in any data structure or repository (i.e. one or more files, database, etc.) that resides locally on Device **98**, or remotely on a remote computing device (i.e. server, cloud, etc.) accessible over a network or an interface. In other aspects, Sound Recognizer **94***b* may detect or recognize an object and/or its properties from a stream of digital sound samples by comparing features from the stream of digital sound samples with features of sounds

of known objects and/or their properties. The features of sounds of known objects and/or their properties can be learned, or manually, programmatically, or otherwise defined. The features of sounds of known objects and/or their properties can be stored in any data structure or repository (i.e. one or more files, database, neural network, etc.) that resides locally on Device **98**, or remotely on a remote computing device (i.e. server, cloud, etc.) accessible over a network or an interface. Typical steps or elements in a feature oriented sound recognition include pre-processing, feature extraction, acoustic modeling, language modeling, and/or others, or a combination thereof, each of which may include its own sub-steps or sub-elements depending on the application. In further aspects, Sound Recognizer **94***b* may detect or recognize a variety of sounds from a stream of digital sound samples using the aforementioned sound sample or feature comparisons, and/or other detection or recognition techniques. For example, sound of a person, animal, vehicle, and/or other sounds can be detected by Sound Recognizer **94***b*. In further aspects, Sound Recognizer **94***b* may detect or recognize sounds using Hidden Markov Models (HMM), Artificial Neural Networks, Dynamic Time Warping (DTW), Gaussian Mixture Models (GMM), and/or other models or techniques, or a combination thereof. Some or all of these models or techniques may include statistical techniques. Examples of artificial neural networks that can be used in Sound Recognizer **94***b* include recurrent neural networks, time delay neural networks (TDNNs), deep neural networks, convolutional neural networks, and/or others. In general, Sound Recognizer **94***b* may include any machine learning, deep learning, and/or other artificial intelligence techniques. In further aspects, Sound Recognizer **94***b* may detect bearing/angle of a recognized object by measuring the direction in which Microphone **92***b* is pointing when sound of maximum strength is received, by analyzing amplitude of the sound, by performing phase analysis (i.e. with microphone array, etc.) of the sound, and/or by utilizing other techniques. Any other techniques known in art can be utilized in Sound Recognizer **94***b*. For example, thresholds for similarity, statistical techniques, and/or optimization techniques can be utilized to determine a match in any of the above-described detection or recognition techniques. In some exemplary embodiments, operating system's Sound recognition functionalities such as iOS's Voice Services, Siri, and/or others can be utilized in Sound Recognizer **94***b*. For example, iOS Voice Services can detect an object (i.e. person, etc.) and/or its properties in a stream of digital sound samples captured by Microphone **92***b* or stored in an electronic repository, which can then be utilized in DCADO Unit **100**, Artificial Intelligence Unit **110**, and/or other elements. In other exemplary embodiments, Java Speech API (JSAPI) implementation such as The Cloud Garden, Sphinx, and/or others can be utilized in Sound Recognizer **94***b*. For example, Cloud Garden JSAPI can detect an object (i.e. person, animal, vehicle, etc.) and/or its properties in a stream of digital sound samples captured by Microphone **92***b* or stored in an electronic repository, which can then be utilized in DCADO Unit **100**, Artificial Intelligence Unit **110**, and/or other elements. Any other programming language's or platform's speech or sound processing API can similarly be utilized. In further exemplary embodiments, applications or engines providing Sound recognition functionalities such as HTK (Hidden Markov Model Toolkit), Kaldi, OpenEars, Dragon Mobile, Julius, iSpeech, CeedVocal, and/or others can be utilized in Sound Recognizer **94***b*. For example, Kaldi SDK can detect an object (i.e. person, animal, vehicle, etc.) and/or its properties in a stream of digital sound samples captured by Microphone **92***b* or stored in an electronic repository, which can then be utilized in DCADO Unit **100**, Artificial Intelligence Unit **110**, and/or other elements.

In further embodiments, Object Processing Unit **93** may include Lidar Processing Unit **94***c* as shown in FIG. **3**C. Lidar Processing Unit **94***c* comprises the functionality for detecting or recognizing objects and/or their properties using light, and/or other disclosed functionalities. As such, Lidar Processing Unit **94***c* can be utilized in detecting existence of an object, type of an object, identity of an object, distance of an object, bearing/angle of an object, location of an object, shape/size of an object, activity of an object, and/or other properties of an object. In general, Lidar Processing Unit **94***c* can be used for any operation supported by Lidar Processing Unit **94***c*. In one example, Lidar Processing Unit **94***c* may detect distance of an object by measuring time delay between emission of a light signal (i.e. laser beam, etc.) and return of the light signal reflected from the object based on known speed of light. In another example, Lidar Processing Unit **94***c* may detect bearing/angle of an object by analyzing the amplitudes of a light signal received by an array of detectors (i.e. detectors arranged into a quadrant or other arrangement, etc.). In a further example, Lidar Processing Unit **94***c* may detect existence, type, identity, shape/size, activity, and/or other properties of an object by illuminating the object with light and acquiring an image of the object, which can then be processed using some of the previously described or other picture recognition techniques. In a further example, Lidar Processing Unit **94***c* may detect existence, type, identity, shape/size, activity, and/or other properties of an object by illuminating the object with light and acquiring a point cloud representation of the object. Lidar Processing Unit **94***c* may detect objects and/or their properties by utilizing any lidar or light-related techniques known in art.

In further embodiments, Object Processing Unit **93** may include Radar Processing Unit **94***d* as shown in FIG. **3**D. Radar Processing Unit **94***d* comprises the functionality for detecting or recognizing objects and/or their properties using radio waves, and/or other disclosed functionalities. As such, Radar Processing Unit **94***d* can be utilized in detecting existence of an object, type of an object, distance of an object, bearing/angle of an object, location of an object, shape/size of an object, activity of an object, and/or other properties of an object. In general, Radar Processing Unit **94***d* can be used for any operation supported by Radar Processing Unit **94***d*. In one example, Radar Processing Unit **94***d* may detect existence of an object by emitting a radio signal and listening for the radio signal reflected from the object. In another example, Radar Processing Unit **94***d* may detect distance of an object by measuring time delay between emission of a radio signal and return of the radio signal reflected from the object based on known speed of the radio signal. In a further example, Radar Processing Unit **94***d* may detect bearing/angle of an object by measuring the direction in which the antenna is pointing when the return signal of maximum strength is received, by analyzing amplitude of the return signal, by performing phase analysis (i.e. with antenna array, etc.) of the return signal, and/or by utilizing any amplitude, phase, or other techniques. In a further example, Radar Processing Unit **94***d* may detect existence, type, identity, shape/size, activity, and/or other properties of an object by illuminating the object with radio waves and acquiring an image of the object, which can then be processed using some of the previously described or other picture recognition techniques. Radar Processing Unit **94***d*

may detect objects and/or their properties by utilizing any radar or radio-related techniques known in art.

In further embodiments, Object Processing Unit **93** may include Sonar Processing Unit **94***e* as shown in FIG. **3**E. Sonar Processing Unit **94***e* comprises the functionality for detecting or recognizing objects and/or their properties using sound, and/or other disclosed functionalities. As such, Sonar Processing Unit **94***e* can be utilized in detecting existence of an object, type of an object, distance of an object, bearing/angle of an object, location of an object, shape/size of an object, activity of an object, and/or other properties of an object. In general, Sonar Processing Unit **94***e* can be used for any operation supported by Sonar Processing Unit **94***e*. In one example, Sonar Processing Unit **94***e* may detect existence of an object by emitting a sound signal and listening for the sound signal reflected from the object. In another example, Sonar Processing Unit **94***e* may detect distance of an object by measuring time delay between emission of a sound signal and return of the sound signal reflected from the object based on known speed of the sound signal. In a further example, Sonar Processing Unit **94***e* may detect bearing/angle of an object by measuring the direction in which the microphone is pointing when the return signal of maximum strength is received, by analyzing amplitude of the return signal, by performing phase analysis (i.e. with microphone array, etc.) of the return signal, and/or by utilizing any amplitude, phase, or other techniques. In a further example, Sonar Processing Unit **94***e* may detect existence, type, identity, shape/size, activity, and/or other properties of an object by illuminating the object with sound pulses and acquiring an image of the object, which can then be processed using some of the previously described or other picture recognition techniques. Sonar Processing Unit **94***e* may detect objects and/or their properties by utilizing any sonar or sound-related techniques known in art.

One of ordinary skill in art will understand that the aforementioned techniques for detecting or recognizing objects and/or their properties are described merely as examples of a variety of possible implementations, and that while all possible techniques for detecting or recognizing objects and/or their properties are too voluminous to describe, other techniques for detecting or recognizing objects and/or their properties known in art are within the scope of this disclosure. Also, any signal processing technique known in art that can facilitate the disclosed functionalities can be utilized in various embodiments. Any combination of the aforementioned and/or other sensors, object detecting or recognizing techniques, signal processing techniques, and/or other elements or techniques can be used in various embodiments.

Referring to FIGS. **4**A-**4**B, an exemplary embodiment of Objects **615** (also referred to simply as objects or other suitable name or reference) detected in Device's **98** surrounding, and resulting Collection of Object Representations **525** are illustrated.

As shown for example in FIG. **4**A, Object **615***a* is detected. Object **615***a* may be recognized as a cat. Object **615***a* may be detected at a distance of 6 m from Device **98**. Object **615***a* may be detected at a bearing/angle of 56° from Device's **98** centerline. Furthermore, Object **615***b* is also detected. Object **615***b* may be recognized as a tree. Object **615***b* may be detected at a distance of 10 m from Device **98**. Object **615***b* may be detected at a bearing/angle of **131** from Device's **98** centerline. Furthermore, Object **615***c* is also detected. Object **615***c* may be recognized as a person. Object **615***c* may be identified as John Doe. Object **615***c* may be detected at a distance of 8 m from Device **98**. Object **615***c* may be detected at a bearing/angle of 287° from Device's **98** centerline. Any other Objects **615** instead of or in addition to Object **615***a*, Object **615***b*, and Object **615***c* may be detected. In some aspects, any features, functionalities, and embodiments of Camera **92***a*/Picture Recognizer **94***a*, Microphone **92***b*/Sound Recognizer **94***b*, and/or other sensors or techniques can be utilized for recognizing and/or identifying a person, a cat, a tree, and/or other Objects **615**. In further aspects, any features, functionalities, and embodiments of Camera **92***a*/Picture Recognizer **94***a*, Microphone **92***b*/Sound Recognizer **94***b*, Lidar **92***c*/Lidar Processing Unit **94***c*, Radar **92***d*/Radar Processing Unit **94***d*, Sonar **92***e*/Sonar Processing Unit **94***e*, and/or other sensors or techniques can be utilized for detecting distance, bearing/angle, and/or other object properties.

As shown for example in FIG. **4**B, Object Processing Unit **93** may create or generate Collection of Object Representations **525** including Object Representation **625***a* representing Object **615***a*, Object Representation **625***b* representing Object **615***b*, Object Representation **625***c* representing Object **615***c*, etc. For instance, Object Representation **625***a* may include Object Property **630***aa* "Cat" in Category **635***aa* "Type", Object Property **630***ab* "6 m" in Category **635***ab* "Distance", Object Property **630***ac* "56°" in Category **635***ac* "Bearing", etc. Also, Object Representation **625***b* may include Object Property **630***ba* "Tree" in Category **635***ba* "Type", Object Property **630***bb* "10 m" in Category **635***bb* "Distance", Object Property **630***bc* "131°" in Category **635***bc* "Bearing", etc. Also, Object Representation **625***c* may include Object Property **630***ca* "Person" in Category **635***ca* "Type", Object Property **630***cb* "John Doe" in Category **635***cb* "Identity", Object Property **630***cc* "8 m" in Category **635***cc* "Distance", Object Property **630***cd* "287°" in Category **635***cd* "Bearing", etc. Any number of Object Representations **625**, and/or other elements or information can be included in Collection of Object Representations **525**. Any number of Object Properties **630** (also referred to simply as object properties or other suitable name or reference), and/or other elements or information can be included in an Object Representation **625**. In some aspects, a reference to Collection of Object Representations **525** comprises a reference to a collection of Object Properties **630** and/or other elements or information related to one or more Objects **615**. Other additional Object Representations **625**, Object Properties **630**, elements, and/or information can be included as needed, or some of the disclosed ones can be excluded, or a combination thereof can be utilized in alternate embodiments of Collection of Object Representations **525**.

Referring now to DCADO Unit **100**, DCADO Unit **100** comprises any hardware, programs, or a combination thereof. DCADO Unit **100** comprises the functionality for learning the operation of Device **98** in circumstances including objects with various properties. DCADO Unit **100** comprises the functionality for structuring and/or storing this knowledge in a knowledgebase (i.e. neural network, graph, sequences, other repository, etc.). DCADO Unit **100** comprises the functionality for enabling autonomous operation of Device **98** in circumstances including objects with various properties. DCADO Unit **100** comprises the functionality for interfacing with or attaching to Application Program **18**, Processor **11**, Logic Circuit **250** (later described), and/or other processing element. DCADO Unit **100** comprises the functionality for obtaining instruction sets, data, and/or other information used, implemented, and/or executed by Application Program **18**, Processor **11**, Logic Circuit **250**, and/or other processing element.

DCADO Unit **100** comprises the functionality for modifying instruction sets, data, and/or other information used, implemented, and/or executed by Application Program **18**, Processor **11**, Logic Circuit **250**, and/or other processing element. DCADO Unit **100** comprises learning, anticipating, decision making, automation, and/or other functionalities disclosed herein. Statistical, artificial intelligence, machine learning, and/or other models or techniques are utilized to implement the disclosed devices, systems, and methods.

When DCADO Unit **100** functionalities are applied on Application Program **18**, Processor **11**, Logic Circuit **250** (later described), and/or other processing element of Device **98**, Device **98** may become autonomous. DCADO Unit **100** may take control from, share control with, and/or release control to Application Program **18**, Processor **11**, Logic Circuit **250**, and/or other processing element to implement autonomous operation of Device **98**. DCADO Unit **100** may take control from, share control with, and/or release control to Application Program **18**, Processor **11**, Logic Circuit **250**, and/or other processing element automatically or after prompting User **50** to allow it. In some aspects, Application Program **18**, Processor **11**, Logic Circuit **250**, and/or other processing element of an autonomous Device **98** may include or be provided with anticipatory (also referred to as alternate or other suitable name or reference) instructions or instruction sets that User **50** did not issue or cause to be executed. Such anticipatory instructions or instruction sets include instruction sets that User **50** may want or is likely to issue or cause to be executed. Anticipatory instructions or instruction sets can be generated by DCADO Unit **100** or elements thereof based on Device's **98** circumstances including objects with various properties. As such, Application Program **18**, Processor **11**, Logic Circuit **250**, and/or other processing element of an autonomous Device **98** may include or be provided with some or all original instructions or instruction sets and/or any anticipatory instructions or instruction sets generated by DCADO Unit **100**. Therefore, autonomous Device **98** operating may include executing some or all original instructions or instruction sets and/or any anticipatory instructions or instruction sets generated by DCADO Unit **100**. In one example, DCADO Unit **100** can overwrite or rewrite the original instructions or instruction sets of Application Program **18**, Processor **11**, Logic Circuit **250**, and/or other processing element with DCADO Unit **100**-generated instructions or instruction sets. In another example, DCADO Unit **100** can insert or embed DCADO Unit **100**-generated instructions or instruction sets among the original instructions or instruction sets of Application Program **18**, Processor **11**, Logic Circuit **250**, and/or other processing element. In a further example, DCADO Unit **100** can branch, redirect, or jump to DCADO Unit **100**-generated instructions or instruction sets from the original instructions or instruction sets of Application Program **18**, Processor **11**, Logic Circuit **250**, and/or other processing element.

In some embodiments, autonomous Device **98** operating comprises determining, by DCADO Unit **100**, a next instruction or instruction set to be executed based on Device's **98** circumstances including objects with various properties prior to the user issuing or causing to be executed the next instruction or instruction set. In yet other embodiments, autonomous application operating comprises determining, by DCADO Unit **100**, a next instruction or instruction set to be executed based on Device's **98** circumstances including objects with various properties prior to the system receiving the next instruction or instruction set.

In some embodiments, autonomous Device **98** operating includes a partially or fully autonomous operating. In an example involving partially autonomous Device **98** operating, a user confirms DCADO Unit **100**-generated instructions or instruction sets prior to their execution. In an example involving fully autonomous application operating, DCADO Unit **100**-generated instructions or instruction sets are executed without user or other system confirmation (i.e. automatically, etc.).

In some embodiments, a combination of DCADO Unit **100** and other systems and/or techniques can be utilized to implement Device's **98** operation. In one example, DCADO Unit **100** may be a primary or preferred system for implementing Device's **98** operation. While operating autonomously under the control of DCADO Unit **100**, Device **98** may encounter a circumstance including objects with various properties that has not been encountered or learned before. In such situations, User **50** and/or non-DCADO system may take control of Device's **98** operation. DCADO Unit **100** may take control again when Device **98** encounters a previously learned circumstance including objects with various properties. Naturally, DCADO Unit **100** can learn Device's **98** operation in circumstances while User **50** and/or non-DCADO system is in control of Device **98**, thereby reducing or eliminating the need for future involvement of User **50** and/or non-DCADO system. In another example, User **50** and/or non-DCADO system may be a primary or preferred system for implementing Device's **98** operation. While operating under the control of User **50** and/or non-DCADO system, User **50** and/or non-DCADO system may release control to DCADO Unit **100** for any reason (i.e. User **50** gets tired or distracted, non-DCADO system gets stuck or cannot make a decision, etc.), at which point Device **98** can be controlled by DCADO Unit **100**. In some designs, DCADO Unit **100** may take control in certain special circumstances including objects with various properties where DCADO Unit **100** may offer superior performance even though User **50** and/or non-DCADO system may generally be preferred. Once Device **98** leaves such special circumstances, DCADO Unit **100** may release control to User **50** and/or non-DCADO system. In general, DCADO Unit **100** can take control from, share control with, or release control to User **50**, non-DCADO system, and/or other system or process at any time, in any circumstances, and remain in control for any period of time as needed.

In some embodiments, DCADO Unit **100** may control one or more sub-devices, sub-systems, or elements of Device **98** while User **50** and/or non-DCADO system may control other one or more sub-devices, sub-systems, or elements of Device **98**.

It should be understood that a reference to autonomous operating of Device **98** may include autonomous operating of Application Program **18**, Processor **11**, Logic Circuit **250**, and/or other processing element depending on context.

Referring now to Acquisition Interface **120**, Acquisition Interface **120** comprises the functionality for obtaining and/or receiving instruction sets, data, and/or other information. Acquisition Interface **120** comprises the functionality for obtaining and/or receiving instruction sets, data, and/or other information from Processor **11**, Application Program **18**, Logic Circuit **250** (later described), and/or other processing element. Acquisition Interface **120** comprises the functionality for obtaining and/or receiving instruction sets, data, and/or other information at runtime. In some aspects, an instruction set may include any computer command, instruction, signal, or input used in Application Program **18**, Processor **11**, Logic Circuit **250**, and/or other processing element. Therefore, the terms instruction set, command, instruction, signal, input, or other such terms may be used

interchangeably herein depending on context. Acquisition Interface **120** also comprises the functionality for attaching to or interfacing with Application Program **18**, Processor **11**, Logic Circuit **250**, and/or other processing element. In one example, Acquisition Interface **120** comprises the functionality to access and/or read runtime engine/environment, virtual machine, operating system, compiler, just-in-time (JIT) compiler, interpreter, translator, execution stack, file, object, data structure, and/or other computing system elements. In another example, Acquisition Interface **120** comprises the functionality to access and/or read memory, storage, bus, interfaces, and/or other computing system elements. In a further example, Acquisition Interface **120** comprises the functionality to access and/or read Processor **11** registers and/or other Processor **11** elements. In a further example, Acquisition Interface **120** comprises the functionality to access and/or read inputs and/or outputs of Application Program **18**, Processor **11**, Logic Circuit **250**, and/or other processing element. In a further example, Acquisition Interface **120** comprises the functionality to access and/or read functions, methods, procedures, routines, subroutines, and/or other elements of Application Program **18**. In a further example, Acquisition Interface **120** comprises the functionality to access and/or read source code, bytecode, compiled, interpreted, or otherwise translated code, machine code, and/or other code. In a further example, Acquisition Interface **120** comprises the functionality to access and/or read values, variables, parameters, and/or other data or information. Acquisition Interface **120** also comprises the functionality for transmitting the obtained instruction sets, data, and/or other information to Artificial Intelligence Unit **110** and/or other element. As such, Acquisition Interface **120** provides input into Artificial Intelligence Unit **110** for knowledge structuring, anticipating, decision making, and/or other functionalities later in the process. Acquisition Interface **120** also comprises other disclosed functionalities.

Acquisition Interface **120** can employ various techniques for obtaining instruction sets, data, and/or other information. In one example, Acquisition Interface **120** can attach to and/or obtain Processor's **11**, Application Program's **18**, Logic Circuits **250**, and/or other processing element's instruction sets, data, and/or other information through tracing or profiling techniques. Tracing or profiling may be used for outputting Processor's **11**, Application Program's **18**, Logic Circuits **250**, and/or other processing element's instruction sets, data, and/or other information at runtime. For instance, tracing or profiling may include adding trace code (i.e. instrumentation, etc.) to an application and/or outputting trace information to a specific target. The outputted trace information (i.e. instruction sets, data, and/or other information, etc.) can then be provided to or recorded into a file, data structure, repository, an application, and/or other system or target that may receive such trace information. As such, Acquisition Interface **120** can utilize tracing or profiling to obtain instruction sets, data, and/or other information and provide them as input into Artificial Intelligence Unit **110**. In some aspects, instrumentation can be performed in source code, bytecode, compiled, interpreted, or otherwise translated code, machine code, and/or other code. In other aspects, instrumentation can be performed in various elements of a computing system such as memory, virtual machine, runtime engine/environment, operating system, compiler, interpreter, translator, processor registers, execution stack, program counter, and/or other elements. In yet other aspects, instrumentation can be performed in various abstraction layers of a computing system such as in software layer (i.e. Application Program **18**, etc.), in virtual machine (if VM is used), in operating system, in Processor **11**, and/or in other layers or areas that may exist in a particular computing system implementation. In yet other aspects, instrumentation can be performed at various time periods in an application's execution such as source code write time, compile time, interpretation time, translation time, linking time, loading time, runtime, and/or other time periods. In yet other aspects, instrumentation can be performed at various granularities or code segments such as some or all lines of code, some or all statements, some or all instructions or instruction sets, some or all basic blocks, some or all functions/routines/subroutines, and/or some or all other code segments.

In some embodiments, Application Program **18** can be automatically instrumented. For example, Acquisition Interface **120** can access Application Program's **18** source code, bytecode, or machine code and select instrumentation points of interest. Selecting instrumentation points may include finding locations in the source code, bytecode, or machine code corresponding to function calls, function entries, function exits, object creations, object destructions, event handler calls, new lines (i.e. to instrument all lines of code, etc.), thread creations, throws, and/or other points of interest. Instrumentation code can then be inserted at the instrumentation points of interest to output Application Program's **18** instruction sets, data, and/or other information. In response to executing instrumentation code, Application Program's **18** instruction sets, data, and/or other information may be received by Acquisition Interface **120**. In some aspects, Application Program's **18** source code, bytecode, or machine code can be dynamically instrumented. For example, instrumentation code can be dynamically inserted into Application Program **18** at runtime.

In other embodiments, Application Program **18** can be manually instrumented. In one example, a programmer can instrument a function call by placing an instrumenting instruction immediately after the function call as in the following example.

```
Device1.moveForward(12);
traceApplication('Device1.moveForward(12);');
```

In another example, an instrumenting instruction can be placed immediately before the function call, or at the beginning, end, or anywhere within the function itself. A programmer may instrument all function calls or only function calls of interest. In a further example, a programmer can instrument all lines of code or only code lines of interest. In a further example, a programmer can instrument other elements utilized or implemented within Application Program **18** such as objects and/or any of their functions, data structures and/or any of their functions, event handlers and/or any of their functions, threads and/or any of their functions, and/or other elements or functions. Similar instrumentation as in the preceding examples can be performed automatically or dynamically. In some designs where manual code instrumentation is utilized, Acquisition Interface **120** can optionally be omitted and Application Program's **18** instruction sets, data, and/or other information may be transmitted directly to Artificial Intelligence Unit **110**.

In some embodiments, DCADO Unit **100** can be selective in learning instruction sets, data, and/or other information to those implemented, utilized, or related to an object, data structure, repository, thread, function, and/or other element of Application Program **18**. In some aspects, Acquisition Interface **120** can obtain Application Program's **18** instruc-

tion sets, data, and/or other information implemented, utilized, or related to a certain object in an object oriented Application Program **18**.

In some embodiments, various computing systems and/or platforms may provide native tools for obtaining instruction sets, data, and/or other information. Also, independent vendors may provide portable tools with similar functionalities that can be utilized across different computing systems and/or platforms. These native and portable tools may provide a wide range of functionalities to obtain runtime and other information such as instrumentation, tracing or profiling, logging application or system messages, outputting custom text messages, outputting objects or data structures, outputting functions/routines/subroutines or their invocations, outputting variable or parameter values, outputting thread or process behaviors, outputting call or other stacks, outputting processor registers, providing runtime memory access, providing inputs and/or outputs, performing live application monitoring, and/or other capabilities. One of ordinary skill in art will understand that, while all possible variations of the techniques to obtain instruction sets, data, and/or other information are too voluminous to describe, these techniques are within the scope of this disclosure.

In one example, obtaining instruction sets, data, and/or other information can be implemented through the .NET platform's native tools for application tracing or profiling such as System.Diagnostics.Trace, System.Diagnostics.Debug, and System.Diagnostics.TraceSource classes for tracing execution flow, and System.Diagnostics.Process, System.Diagnostics.EventLog, and System.Diagnostics.PerformanceCounter classes for profiling code, accessing local and remote processes, starting and stopping system processes, and interacting with Windows event logs, etc. For instance, a set of trace switches can be created that output an application's information. The switches can be configured using the .config file. For a Web application, this may typically be Web.config file associated with the project. In a Windows application, this file may typically be named applicationName.exe.config. Trace code can be added to application code automatically or manually as previously described. Appropriate listener can be created where the trace output is received. Trace code may output trace messages to a specific target such as a file, a log, a database, an object, a data structure, and/or other repository or system. Acquisition Interface **120** or Artificial Intelligence Unit **110** can then read or obtain the trace information from these targets. In some aspects, trace code may output trace messages directly to Acquisition Interface **120**. In other aspects, trace code may output trace messages directly to Artificial Intelligence Unit **110**. In the case of outputting trace messages to Acquisition Interface **120** or directly to Artificial Intelligence Unit **110**, custom listeners can be built to accommodate these specific targets. Other platforms, tools, and/or techniques can provide equivalent or similar functionalities as the above described ones.

In another example, obtaining instruction sets, data, and/or other information can be implemented through the .NET platform's Profiling API that can be used to create a custom profiler application for tracing, monitoring, interfacing with, and/or managing a profiled application. The Profiling API provides an interface that includes methods to notify the profiler of events in the profiled application. The Profiling API may also provide an interface to enable the profiler to call back into the profiled application to obtain information about the state of the profiled application. The Profiling API may further provide call stack profiling functionalities. Call stack (also referred to as execution stack, control stack, runtime stack, machine stack, the stack, etc.) includes a data structure that can store information about active subroutines of an application. The Profiling API may provide a stack snapshot method, which enables a trace of the stack at a particular point in time. The Profiling API may also provide a shadow stack method, which tracks the call stack at every instant. A shadow stack can obtain function arguments, return values, and information about generic instantiations. A function such as FunctionEnter can be utilized to notify the profiler that control is being passed to a function and can provide information about the stack frame and function arguments. A function such as FunctionLeave can be utilized to notify the profiler that a function is about to return to the caller and can provide information about the stack frame and function return value. An alternative to call stack profiling includes call stack sampling in which the profiler can periodically examine the stack. In some aspects, the Profiling API enables the profiler to change the in-memory code stream for a routine before it is just-in-time (JIT) compiled where the profiler can dynamically add instrumentation code to all or particular routines of interest. Other platforms, tools, and/or techniques may provide equivalent or similar functionalities as the above described ones.

In a further example, obtaining instruction sets, data, and/or other information can be implemented through Java platform's APIs for application tracing or profiling such as Java Virtual Machine Profiling Interface (JVMPI), Java Virtual Machine Tool Interface (JVMTI), and/or other APIs or tools. These APIs can be used for instrumentation of an application, for notification of Java Virtual Machine (VM) events, and/or other functionalities. One of the tracing or profiling techniques that can be utilized includes bytecode instrumentation. The profiler can insert bytecodes into all or some of the classes. In application execution profiling, for example, these bytecodes may include methodEntry and methodExit calls. In memory profiling, for example, the bytecodes may be inserted after each new or after each constructor. In some aspects, insertion of instrumentation bytecode can be performed either by a post-compiler or a custom class loader. An alternative to bytecode instrumentation includes monitoring events generated by the JVMPI or JVMTI interfaces. Both APIs can generate events for method entry/exit, object allocation, and/or other events. In some aspects, JVMTI can be utilized for dynamic bytecode instrumentation where insertion of instrumentation bytecodes is performed at runtime. The profiler may insert the necessary instrumentation when a selected class is invoked in an application. This can be accomplished using the JVMTI's redefineClasses method, for example. This approach also enables changing of the level of profiling as the application is running. If needed, these changes can be made adaptively without restarting the application. Other platforms, tools, and/or techniques may provide equivalent or similar functionalities as the above described ones.

In a further example, obtaining instruction sets, data, and/or other information can be implemented through JVMTI's programming interface that enables creation of software agents that can monitor and control a Java application. An agent may use the functionality of the interface to register for notification of events as they occur in the application, and to query and control the application. A JVMTI agent may use JVMTI functions to extract information from a Java application. A JVMTI agent can be utilized to obtain an application's runtime information such as method calls, memory allocation, CPU utilization, lock contention, and/or other information. JVMTI may include functions to obtain information about variables, fields, methods, classes, and/or

other information. JVMTI may also provide notification for numerous events such as method entry and exit, exception, field access and modification, thread start and end, and/or other events. Examples of JVMTI built-in methods include GetMethodName to obtain the name of an invoked method, GetThreadInfo to obtain information for a specific thread, GetClassSignature to obtain information about the class of an object, GetStackTrace to obtain information about the stack including information about stack frames, and/or other methods. Other platforms, tools, and/or techniques may provide equivalent or similar functionalities as the above described ones.

In a further example, obtaining instruction sets, data, and/or other information can be implemented through java.lang.Runtime class that provides an interface for application tracing or profiling. Examples of methods provided in java.lang.Runtime that can be used to obtain an application's instruction sets, data, and/or other information include tracemethodcalls, traceinstructions, and/or other methods. These methods prompt the Java Virtual Machine to output trace information for a method or instruction in the virtual machine as it is executed. The destination of trace output may be system dependent and include a file, a listener, and/or other destinations where Acquisition Interface **120**, Artificial Intelligence Unit **110**, and/or other disclosed elements can access needed information. In addition to tracing or profiling tools native to their respective computing systems and/or platforms, many independent tools exist that provide tracing or profiling functionalities on more than one computing system and/or platform. Examples of these tools include Pin, DynamoRIO, KernInst, DynInst, Kprobes, OpenPAT, DTrace, SystemTap, and/or others. Other platforms, tools, and/or techniques may provide equivalent or similar functionalities as the above described ones.

In a further example, obtaining instruction sets, data, and/or other information can be implemented through logging tools of the platform and/or operating system on which an application runs. Some logging tools may include nearly full feature sets of the tracing or profiling tools previously described. In one example, Visual Basic enables logging of runtime messages through its Microsoft.VisualBasic.Logging namespace that provides a log listener where the log listener may direct logging output to a file and/or other target. In another example, Java enables logging through its java.util.logging class. In some aspects, obtaining an application's instruction sets, data, and/or other information can be implemented through logging capabilities of the operating system on which an application runs. For example, Windows NT features centralized log service that applications and operating-system components can utilize to report their events including any messages. Windows NT provides functionalities for system, application, security, and/or other logging. An application log may include events logged by applications. Windows NT, for example, may include support for defining an event source (i.e. application that created the event, etc.). Windows Vista, for example, supports a structured XML log-format and designated log types to allow applications to more precisely log events and to help interpret the events. Examples of different types of event logs include administrative, operational, analytic, debug, and/or other log types including any of their subcategories. Examples of event attributes that can be utilized include eventID, level, task, opcode, keywords, and/or other event attributes. Windows wevtutil tool enables access to events, their structures, registered event publishers, and/or their configuration even before the events are fired. Wevtutil supports capabilities such as retrieval of the names of all logs on a computing device; retrieval of configuration information for a specific log; retrieval of event publishers on a computing device; reading events from an event log, from a log file, or using a structured query; exporting events from an event log, from a log file, or using a structured query to a specific target; and/or other capabilities. Operating system logs can be utilized solely if they contain sufficient information on an application's instruction sets, data, and/or other information. Alternatively, operating system logs can be utilized in combination with another source of information (i.e. trace information, call stack, processor registers, memory, etc.) to reconstruct the application's instruction sets, data, and/or other information needed for Artificial Intelligence Unit **110** and/or other elements. In addition to logging capabilities native to their respective platforms and/or operating systems, many independent tools exist that provide logging on different platforms and/or operating systems. Examples of these tools include Log 4j, Logback, SmartInspect, N Log, log 4net, Microsoft Enterprise Library, ObjectGuy Framework, and/or others. Other platforms, tools, and/or techniques may provide equivalent or similar functionalities as the above described ones.

In a further example, obtaining instruction sets, data, and/or other information can be implemented through tracing or profiling the operating system on which an application runs. As in tracing or profiling an application, one of the techniques that can be utilized includes adding instrumentation code to the operating system's source code. Such instrumentation code can be added to the operating system's source code before kernel compilation or recompilation, for instance. This type of instrumentation may involve defining or finding locations in the operating system's source code where instrumentation code may be inserted. Kernel instrumentation can also be performed without the need for kernel recompilation or rebooting. In some aspects, instrumentation code can be added at locations of interest through binary rewriting of compiled kernel code. In other aspects, kernel instrumentation can be performed dynamically where instrumentation code is added and/or removed where needed at runtime. For instance, dynamic instrumentation may overwrite kernel code with a branch instruction that redirects execution to instrumentation code or instrumentation routine. In yet other aspects, kernel instrumentation can be performed using just-in-time (JIT) dynamic instrumentation where execution may be redirected to a copy of kernel's code segment that includes instrumentation code. This type of instrumentation may include a JIT compiler and creation of a copy of the original code segment having instrumentation code or calls to instrumentation routines embedded into the original code segment. Instrumentation of the operating system may enable total system visibility including visibility into an application's behavior by enabling generation of low level trace information. Other platforms, tools, and/or techniques may provide equivalent or similar functionalities as the above described ones.

In a further example, obtaining instruction sets, data, and/or other information can be implemented through tracing or profiling the processor on which an application runs. For example, some Intel processors provide Intel Processor Trace (i.e. Intel PT, etc.), a low-level tracing feature that enables recording executed instruction sets, and/or other data or information of one or more applications. Intel PT is facilitated by the Processor Trace Decoder Library along with its related tools. Intel PT is a low-overhead execution tracing feature that records information about application execution on each hardware thread using dedicated hardware facilities. The recorded execution/trace information is

collected in data packets that can be buffered internally before being sent to a memory subsystem or another system or element (i.e. Acquisition Interface **120**, Artificial Intelligence Unit **110**, etc.). Intel PT also enables navigating the recorded execution/trace information via reverse stepping commands. Intel PT can be included in an operating system's core files and provided as a feature of the operating system. Intel PT can trace globally some or all applications running on an operating system. Acquisition Interface **120** or Artificial Intelligence Unit **110** can read or obtain the recorded execution/trace information from Intel PT. Other platforms, tools, and/or techniques may provide equivalent or similar functionalities as the above described ones.

In a further example, obtaining instruction sets, data, and/or other information can be implemented through branch tracing or profiling. Branch tracing may include an abbreviated instruction trace in which only the successful branch instruction sets are traced or recorded. Branch tracing can be implemented through utilizing dedicated processor commands, for example. Executed branches may be saved into special branch trace store area of memory. With the availability and reference to a compiler listing of the application together with branch trace information, a full path of executed instruction sets can be reconstructed. The full path can also be reconstructed with a memory dump (containing the program storage) and branch trace information. In some aspects, branch tracing can be utilized for pre-learning or automated learning of an application's instruction sets, data, and/or other information where a number of application simulations (i.e. simulations of likely/common operations, etc.) are performed. As such, the application's operation can be learned automatically saving the time that would be needed to learn the application's operation directed by a user. Other platforms, tools, and/or techniques may provide equivalent or similar functionalities as the above described ones.

In a further example, obtaining instruction sets, data, and/or other information can be implemented through assembly language. Assembly language is a low-level programming language for a computer or other programmable device in which there is a strong correlation between the language and the architecture's machine instruction sets. Syntax, addressing modes, operands, and/or other elements of an assembly language instruction set may translate directly into numeric (i.e. binary, etc.) representations of that particular instruction set. Because of this direct relationship with the architecture's machine instruction sets, assembly language can be a powerful tool for tracing or profiling an application's execution in processor registers, memory, and/or other computing system components. For example, using assembly language, memory locations of a loaded application can be accessed, instrumented, and/or otherwise manipulated. In some aspects, assembly language can be used to rewrite or overwrite original in-memory instruction sets of an application with instrumentation instruction sets. In other aspects, assembly language can be used to redirect application's execution to instrumentation routine/subroutine or other code segment elsewhere in memory by inserting a jump into the application's in-memory code, by redirecting program counter, or by other techniques. Some operating systems may implement protection from changes to applications loaded into memory. Operating system, processor, or other low level commands such as Linux mprotect command or similar commands in other operating systems may be used to unprotect the protected locations in memory before the change. In yet other aspects, assembly language can be used to obtain instruction sets, data, and/or other information through accessing and/or reading instruction register, program counter, other processor registers, memory locations, and/or other components of a computing system. In yet other aspects, high-level programming languages may call or execute an external assembly language program to facilitate obtaining instruction sets, data, and/or other information as previously described. In yet other aspects, relatively low-level programming languages such as C may allow embedding assembly language directly in their source code such as, for example, using asm keyword of C. Other platforms, tools, and/or techniques may provide equivalent or similar functionalities as the above described ones.

In a further example, it may be sufficient to obtain user or other inputs, variables, parameters, and/or other data in some procedural, simple object oriented, or other applications. In one instance, a simple procedural application executes a sequence of instruction sets until the end of the program. During its execution, the application may receive user or other input, store the input in a variable, and perform calculations using the variable to reach a result. The value of the variable can be obtained or traced. In another instance, a more complex procedural application comprises one or more functions/routines/subroutines each of which may include a sequence of instruction sets. The application may execute a main sequence of instruction sets with a branch to a function/routine/subroutine. During its execution, the application may receive user or other input, store the input in a variable, and pass the variable as a parameter to the function/routine/subroutine. The function/routine/subroutine may perform calculations using the parameter and return a value that the rest of the application can use to reach a result. The value of the variable or parameter passed to the function/routine/subroutine, and/or return value can be obtained or traced. Values of user or other inputs, variables, parameters, and/or other items of interest can be obtained through previously described tracing, instrumentation, and/or other techniques. Other platforms, tools, and/or techniques may provide equivalent or similar functionalities as the above described ones.

Referring to FIG. **5**, in yet another example, obtaining instruction sets, data, and/or other information may be implemented through tracing, profiling, or sampling of instruction sets or data in processor registers, memory, or other computing system components where instruction sets, data, and/or other information may be stored or utilized. For example, Instruction Register **212** may be part of Processor **11** and it may store the instruction set currently being executed or decoded. In some processors, Program Counter **211** (also referred to as instruction pointer, instruction address register, instruction counter, or part of instruction sequencer) may be incremented after fetching an instruction set, and it may hold or point to the memory address of the next instruction set to be executed. In a processor where the incrementation precedes the fetch, Program Counter **211** may point to the current instruction set being executed. In the instruction cycle, an instruction set may be loaded into Instruction Register **212** after Processor **11** fetches it from location in Memory **12** pointed to by Program Counter **211**. Instruction Register **212** may hold the instruction set while it is decoded by Instruction Decoder **213**, prepared, and executed. In some aspects, data (i.e. operands, etc.) needed for instruction set execution may be loaded from Memory **12** into a register within Register Array **214**. In other aspects, the data may be loaded directly into Arithmetic Logic Unit **215**. For instance, as instruction sets pass through Instruction Register **212** during application execution, they may be transmitted to Acquisition Interface **120** as shown. Examples

of the steps in execution of a machine instruction set may include decoding the opcode (i.e. portion of a machine instruction set that may specify the operation to be performed), determining where the operands may be located (depending on architecture, operands may be in registers, the stack, memory, I/O ports, etc.), retrieving the operands, allocating processor resources to execute the instruction set (needed in some types of processors), performing the operation indicated by the instruction set, saving the results of execution, and/or other execution steps. Examples of the types of machine instruction sets that can be utilized include arithmetic, data handling, logical, program control, as well as special and/or other instruction set types. In addition to the ones described or shown, examples of other computing system or processor components that can be used during an instruction cycle include memory address register (MAR) that may hold the address of a memory block to be read from or written to; memory data register (MDR) that may hold data fetched from memory or data waiting to be stored in memory; data registers that may hold numeric values, characters, small bit arrays, or other data; address registers that may hold addresses used by instruction sets that indirectly access memory; general purpose registers (GPRs) that may store both data and addresses; conditional registers that may hold truth values often used to determine whether some instruction set should or should not be executed; floating point registers (FPRs) that may store floating point numbers; constant registers that may hold read-only values such as zero, one, or pi; special purpose registers (SPRs) such as status register, program counter, or stack pointer that may hold information on program state; machine-specific registers that may store data and settings related to a particular processor; Register Array **214** that may include an array of any number of processor registers; Arithmetic Logic Unit **215** that may perform arithmetic and logic operations; control unit that may direct processor's operation; and/or other circuits or components. Tracing, profiling, or sampling of processor registers, memory, or other computing system components can be implemented in a program, combination of hardware and program, or purely hardware system. Dedicated hardware may be built to perform tracing, profiling, or sampling of processor registers or any computing system components with marginal or no impact to computing overhead.

One of ordinary skill in art will recognize that FIG. **5** depicts one of many implementations of processor or computing system components, and that various additional components can be included, or some of the disclosed ones can be excluded, or a combination thereof can be utilized in alternate implementations. Processor or computing system components may be arranged or connected differently in alternate implementations. Processor or computing system components may also be connected with external elements using various connections. For instance, the connection between Instruction Register **212** and Acquisition Interface **120** may include any number or types of connections such as, for example, a dedicated connection for each bit of Instruction Register **212** (i.e. 32 connections for a 32 bit Instruction Register **212**, etc.). Any of the described or other connections or interfaces may be implemented among any processor or computing system components and Acquisition Interface **120** or other elements.

Referring to FIGS. **6**A-**6**B, in yet another example, obtaining instruction sets, data, and/or other information may be implemented through tracing, profiling, or sampling of Logic Circuit **250**. While Processor **11** includes any type or embodiment of logic circuit, Logic Circuit **250** is described separately here to offer additional detail on its functioning. Some Devices **98** may not need the processing capabilities of an entire Processor **11**, but instead a more tailored Logic Circuit **250**. Examples of such Devices **98** include home appliances, audio or video electronics, vehicle systems, toys, industrial machines, robots, and/or others. Logic Circuit **250** comprises the functionality for performing logic operations. Logic Circuit **250** comprises the functionality for performing logic operations using the circuit's inputs and producing outputs based on the logic operations performed on the inputs. Logic Circuit **250** may generally be implemented using transistors, diodes, and/or other electronic switches, but can also be constructed using vacuum tubes, electromagnetic relays (relay logic), fluidic logic, pneumatic logic, optics, molecules, or even mechanical elements. In some aspects, Logic Circuit **250** may be or include a microcontroller, field-programmable gate array (FPGA), application-specific integrated circuit (ASIC), and/or other computing circuit or device. In other aspects, Logic Circuit **250** may be or include any circuit or device comprising one or more logic gates, one or more transistors, one or more switches, and/or one or more other logic components. In further aspects, Logic Circuit **250** may be or include any integrated or other circuit or device that can perform logic operations. Logic may generally refer to Boolean logic utilized in binary operations, but other logics can also be used. Input into Logic Circuit **250** may include or refer to a value inputted into the Logic Circuit **250**, therefore, these terms may be used interchangeably herein depending on context. In one example, Logic Circuit **250** may perform some logic operations using four input values and produce two output values. As the four input values are delivered to or received by Logic Circuit **250**, they may be obtained by Acquisition Interface **120** through the four hardwired connections as shown in FIG. **6**A. In another example, Logic Circuit **250** may perform some logic operations using four input values and produce two output values. As the two output values are generated by or transmitted out of Logic Circuit **250**, they may be obtained by Acquisition Interface **120** through the two hardwired connections as shown in FIG. **6**B. In a further example, instead of or in addition to obtaining input and/or output values of Logic Circuit **250**, the state of Logic Circuit **250** may be obtained by reading or accessing values from one or more Logic Circuit's **250** internal components such as registers, memories, buses, and/or others (i.e. similar to the previously described tracing, profiling, and/or sampling of Processor **11** components, etc.). Tracing, profiling, or sampling of Logic Circuit **250** can be implemented in a program, combination of hardware and program, or purely hardware system. Dedicated hardware may be built to perform tracing, profiling, or sampling of Logic Circuit **250** with marginal or no impact to computing overhead. Any of the elements and/or techniques for tracing, profiling, or sampling of Logic Circuit **250** can similarly be implemented with Processor **11** and/or other processing elements. In some designs, DCADO Unit **100** may include clamps and/or other elements to attach DCADO Unit **100** to inputs (i.e. input wires, etc.) into and/or outputs (i.e. output wires, etc.) from Logic Circuit **250**. Such clamps and/or attachment elements enable seamless attachment of DCADO Unit **100** to any circuit or computing device without the need to redesign or alter the circuit or computing device.

In some embodiments, DCADO Unit **100** may learn input values directly from an actuator (previously described, not shown). For example, Logic Circuit **250** or other processing element may control an actuator that enables Device **98** to

perform mechanical, physical, and/or other operations. An actuator may receive one or more input values or control signals from Logic Circuit **250** or other processing element directing the actuator to perform specific operations. As one or more input values or control signals are delivered to or received by the actuator, they may be obtained by Acquisition Interface **120** as previously described with respect to obtaining input values of Logic Circuit **250**. Specifically, for instance, one or more input values or control signals of an actuator may be obtained by Acquisition Interface **120** via hardwired or other connections.

One of ordinary skill in art will recognize that FIGS. **6**A-**6**B depict one of many implementations of Logic Circuit **250** and that any number of input and/or output values can be utilized in alternate implementations. One of ordinary skill in art will also recognize that Logic Circuit **250** may include any number and/or combination of logic components to implement any logic operations.

Other additional techniques or elements may be utilized as needed for obtaining instruction sets, data, and/or other information, or some of the disclosed techniques or elements may be excluded, or a combination thereof may be utilized in alternate embodiments.

Referring to FIGS. **7**A-**7**E, some embodiments of Instruction Sets **526** are illustrated. In some aspects, Instruction Set **526** includes one or more instructions or commands of Application Program **18**. For example, Instruction Set **526** may include one or more instructions or commands of a high-level programming language such as Java or SQL, a low-level language such as assembly or machine language, an intermediate language or construct such as bytecode, and/or any other language or construct. In other aspects, Instruction Set **526** includes one or more inputs into and/or outputs from Logic Circuit **250**, Processor **11**, Application Program **18**, and/or other processing element. In further aspects, Instruction Set **526** includes one or more values or states of registers and/or other components of Logic Circuit **250**, Processor **11**, and/or other processing element. In general, Instruction Set **526** may include one or more instructions, commands, keywords, symbols (i.e. parentheses, brackets, commas, semicolons, etc.), operators (i.e. =, <, >, etc.), variables, values, objects, data structures, functions (i.e. Function1( ), FIRST( ), MIN( ), SQRT( ), etc.), parameters, states, signals, inputs, outputs, characters, digits, references thereto, and/or other components for performing an operation.

In an embodiment shown in FIG. **7**A, Instruction Set **526** includes code of a high-level programming language (i.e. Java, C++, etc.) comprising the following function call construct: Function1 (Parameter1, Parameter2, Parameter3, . . .). An example of a function cal applying the above construct includes the following Instruction Set **526**: moveTo(Device1, 14, 8). The function or reference thereto "moveTo(Device1, 14, 8)" may be an Instruction Set **526** directing Device1 to move to a location with coordinates 14 and 8, for example. In another embodiment shown in FIG. **7**B, Instruction Set **526** includes structured query language (SQL). In a further embodiment shown in FIG. **7**C, Instruction Set **526** includes bytecode (i.e. Java bytecode, Python bytecode, CLR bytecode, etc.). In a further embodiment shown in FIG. **7**D, Instruction Set **526** includes assembly code. In a further embodiment shown in FIG. **7**E, Instruction Set **526** includes machine code.

Referring to FIGS. **8**A-**8**B, some embodiments of Extra Information **527** (also referred to as Extra Info **527**) are illustrated. In an embodiment shown in FIG. **8**A, Collection of Object Representations **525** may include or be associated with Extra Info **527**. In an embodiment shown in FIG. **8**B, Instruction Set **526** may include or be associated with Extra Info **527**.

Extra Info **527** comprises the functionality for storing any information useful in comparisons or decision making performed in autonomous device operation, and/or other functionalities. One or more Extra Infos **527** can be stored in, appended to, or associated with a Collection of Object Representations **525**, Instruction Set **526**, and/or other element. In some embodiments, the system can obtain Extra Info **527** at a time of creating or generating Collection of Object Representations **525**. In other embodiments, the system can obtain Extra Info **527** at a time of acquiring Instruction Set **526**. In general, Extra Info **527** can be obtained at any time. Examples of Extra Info **527** include time information, location information, computed information, contextual information, and/or other information. Any information can be utilized that can provide information for enhanced comparisons or decision making performed in autonomous device operation. Which information is utilized and/or stored in Extra Info **527** can be set by a user, by DCADO system administrator, or automatically by the system. Extra Info **527** may include or be referred to as contextual information, and vice versa. Therefore, these terms may be used interchangeably herein depending on context.

In some aspects, time information (i.e. time stamp, etc.) can be utilized and/or stored in Extra Info **527**. Time information can be useful in comparisons or decision making performed in autonomous device operation related to a specific time period as Device **98** may be required to perform specific operations at certain parts of day, month, year, and/or other time periods. Time information can be obtained from the system clock, online clock, oscillator, or other time source. In general, Extra Info **527** may include time information related to when Device **98** performed an operation. In other aspects, location information (i.e. coordinates, distance/angle from a known point, address, etc.) can be utilized and/or stored in Extra Info **527**. Location information can be useful in comparisons or decision making performed in autonomous device operation related to a specific place as Device **98** may be required to perform specific operations at certain places. Location information can be obtained from a positioning system (i.e. radio signal triangulation, GPS capabilities, etc.), sensors, and/or other location system. In general, Extra Info **527** may include location information related to where Device **98** performed an operation. In further aspects, computed information can be utilized and/or stored in Extra Info **527**. Computed information can be useful in comparisons or decision making performed in autonomous device operation where information can be calculated, inferred, or derived from other available information. DCADO Unit **100** and/or other disclosed elements may include computational functionalities to create Extra Info **527** by performing calculations or inferences using other information. In one example, Device's **98** speed can be computed or estimated from Device's **98** location and/or time information. In another example, Device's **98** bearing (i.e. angle or direction of movement, etc.) can be computed or estimated from Device's **98** location information by utilizing Pythagorean theorem, trigonometry, and/or other theorems, formulas, or disciplines. In a further example, speeds, bearings, distances, and/or other properties of objects around Device **98** can similarly be computed or inferred using known information. In further aspects, observed information can be utilized and/or stored in Extra Info **527**. In further aspects,

other information can be utilized and/or stored in Extra Info **527**. Examples of such other information include user specific information (i.e. skill level, age, gender, etc.), group user information (i.e. access level, etc.), version of Application Program **18**, type of Application Program **18**, type of Processor **11**, type of Logic Circuit **250**, type of Device **98**, and/or other information.

Referring to FIG. **9**, an embodiment where DCADO Unit **100** is part of or operating on Processor **11** is illustrated. In one example, DCADO Unit **100** may be a hardware element or circuit embedded or built into Processor **11**. In another example, DCADO Unit **100** may be a program operating on Processor **11**.

Referring to FIG. **10**, an embodiment where DCADO Unit **100** resides on Server **96** accessible over Network **95** is illustrated. Any number of Devices **98** may connect to such remote DCADO Unit **100** and the remote DCADO Unit **100** may learn their operations in circumstances including objects with various properties. In turn, any number of Devices **98** can utilize the remote DCADO Unit **100** for autonomous operation in circumstances including objects with various properties. A remote DCADO Unit **100** can be offered as a network service (i.e. online application, etc.). In some aspects, a remote DCADO Unit **100** (i.e. global DCADO Unit **100**, etc.) may reside on the Internet and be available to all the world's Devices **98** configured to transmit their operations in circumstances including objects with various properties and/or configured to utilize the remote DCADO Unit **100** for autonomous operation in circumstances including objects with various properties. For example, multiple operators (i.e. Users **50**, etc.) may operate their Devices **98** where the Devices **98** may be configured to transmit their operations in circumstances including objects with various properties to a remote DCADO Unit **100**. Such remote DCADO Unit **100** enables learning of the operators' collective knowledge of operating Device **98** in circumstances including objects with various properties. Server **96** may be or include any type or form of a remote computing device such as an application server, a network service server, a cloud server, a cloud, and/or other remote computing device. Server **96** may include any features, functionalities, and embodiments of the previously described Computing Device **70**. It should be understood that Server **96** does not have to be a separate computing device and that Server **96**, its elements, or its functionalities can be implemented on Device **98**. Network **95** may include various networks, connection types, protocols, interfaces, APIs, and/or other elements or techniques known in art all of which are within the scope of this disclosure. Any of the previously described networks, network or connection types, networking interfaces, and/or other networking elements or techniques can similarly be utilized. Any of the disclosed elements may reside on Server **96** in alternate implementations. In one example, Artificial Intelligence Unit **110** can reside on Server **96** and Acquisition Interface **120** and/or Modification Interface **130** can reside on Device **98**. In another example, Knowledgebase **530** can reside on Server **96** and the rest of the elements of DCADO Unit **100** can reside on Device **98**. Any other combination of local and remote elements can be implemented.

Referring to FIG. **11**, an embodiment of learning and/or using Remote Device's **97** circumstances for autonomous Remote Device **97** operation is illustrated. In such embodiments, in addition to providing input into Object Processing Unit **93** for learning functionalities herein, Sensor **92** (i.e. Camera **92***a*, Radar **92***d*, Sonar **92***e*, etc.) can provide input into Display **21** or other device for User's **50** perception of Remote Device's **97** surrounding. As User **50** operates Remote Device **97**, DCADO Unit **100** may learn Remote Device's **97** operation in circumstances including objects with various properties. Such embodiments can be utilized in any situation where one device controls (i.e. remote controls, etc.) another device, any situation where some or all of the processing is on one device and sensor capabilities are on another device, and/or other situations. In one example, a drone controlling device (i.e. Device **98**, etc.) may send control signals to operate a drone (i.e. Remote Device **97**, etc.) and receive information on the drone's surrounding from Sensor **92** on the drone. In another example, a robot controlling device (i.e. Device **98**, etc.) may send control signals to operate a robot (i.e. Remote Device **97**, etc.) and receive information on the robot's surrounding from Sensor **92** on the robot. Any of the disclosed elements in addition to Sensor **92** may reside on Remote Device **97** in alternate implementations.

Referring to FIG. **12**, an embodiment of Artificial Intelligence Unit **110** is illustrated. Artificial Intelligence Unit **110** comprises interconnected Knowledge Structuring Unit **520**, Knowledgebase **530**, Decision-making Unit **540**, and Confirmation Unit **550**. Other additional elements can be included as needed, or some of the disclosed ones can be excluded, or a combination thereof can be utilized in alternate embodiments.

Artificial Intelligence Unit **110** comprises the functionality for learning Device's **98** operation in circumstances including objects with various properties. Artificial Intelligence Unit **110** comprises the functionality for learning one or more collections of object representations correlated with any instruction sets, data, and/or other information. In some aspects, Artificial Intelligence Unit **110** comprises the functionality for learning one or more Collections of Object Representations **525** correlated with any Instruction Sets **526** and/or Extra Info **527**. In other aspects, Artificial Intelligence Unit **110** comprises the functionality for learning one or more Collections of Object Representations **525** some of which may not be correlated with any Instruction Sets **526** and/or Extra Info **527**. Further, Artificial Intelligence Unit **110** comprises the functionality for anticipating Device's **98** operation in circumstances including objects with various properties. Artificial Intelligence Unit **110** comprises the functionality for anticipating one or more instruction sets, data, and/or other information. Artificial Intelligence Unit **110** comprises the functionality for anticipating one or more Instruction Sets **526** based on one or more incoming Collections of Object Representations **525**. Artificial Intelligence Unit **110** comprises the functionality for anticipating one or more Instruction Sets **526** to be used or executed in Device's **98** autonomous operation. Artificial Intelligence Unit **110** also comprises other disclosed functionalities.

Knowledge Structuring Unit **520**, Knowledgebase **530**, and Decision-making Unit **540** are described later.

Confirmation Unit **550** comprises the functionality for confirming, modifying, evaluating (i.e. rating, etc.), and/or canceling one or more anticipatory Instruction Sets **526**, and/or other functionalities. Confirmation Unit **550** is an optional element that can be omitted depending on implementation. In some embodiments, Confirmation Unit **550** can serve as a means of confirming anticipatory Instruction Sets **526**. For example, Decision-making Unit **540** may determine one or more anticipatory Instruction Sets **526** and provide them to User **50** for confirmation. User **50** may be provided with an interface (i.e. graphical user interface, selectable list of anticipatory Instruction Sets **526**, etc.) to approve or confirm execution of the anticipatory Instruction

Sets **526**. In some aspects, Confirmation Unit **550** can automate User **50** confirmation. In one example, if one or more incoming Collections of Object Representations **525** from Object Processing Unit **93** and one or more Collections of Object Representations **525** from a Knowledge Cell **800** were found to be a perfect or highly similar match, anticipatory Instruction Sets **526** correlated with the one or more Collections of Object Representations **525** from the Knowledge Cell **800** can be automatically executed without User's **50** confirmation. Conversely, if one or more incoming Collections of Object Representations **525** from Object Processing Unit **93** and one or more Collections of Object Representations **525** from a Knowledge Cell **800** were found to be less than a highly similar match, anticipatory Instruction Sets **526** correlated with the one or more Collections of Object Representations **525** from the Knowledge Cell **800** can be presented to User **50** for confirmation and/or modifying. Any features, functionalities, and/or embodiments of Similarity Comparison **125** (later described) can be utilized for such similarity determination. In other embodiments, Confirmation Unit **550** can serve as a means of modifying or editing anticipatory Instruction Sets **526**. For example, Decision-making Unit **540** may determine one or more anticipatory Instruction Sets **526** and provide them to User **50** for modification. User **50** may be provided with an interface (i.e. graphical user interface, etc.) to modify the anticipatory Instruction Sets **526** before their execution. In further embodiments, Confirmation Unit **550** can serve as a means of evaluating or rating anticipatory Instruction Sets **526** if they matched User's **50** intended operation. For example, Decision-making Unit **540** may determine one or more anticipatory Instruction Sets **526**, which the system may automatically execute. User **50** may be provided with an interface (i.e. graphical user interface, etc.) to rate (i.e. on a scale from 0 to 1, etc.) how well Decision-making Unit **540** predicted the executed anticipatory Instruction Sets **526**. In some aspects, rating can be automatic and based on a particular function or method that rates how well the anticipatory Instruction Sets **526** matched the desired operation. In one example, a rating function or method can assign a higher rating to anticipatory Instruction Sets **526** that were least modified in the confirmation process. In another example, a rating function or method can assign a higher rating to anticipatory Instruction Sets **526** that were canceled least number of times by User **50**. Any other automatic rating function or method can be utilized. In yet other embodiments, Confirmation Unit **550** can serve as a means of canceling anticipatory Instruction Sets **526** if they did not match User's **50** intended operation. For example, Decision-making Unit **540** may determine one or more anticipatory Instruction Sets **526**, which the system may automatically execute. The system may save the state of Device **98**, Processor **11** (save its register values, etc.), Logic Circuit **250**, Application Program **18** (i.e. save its variables, data structures, objects, location of its current instruction, etc.), and/or other processing elements before executing anticipatory Instruction Sets **526**. User **50** may be provided with an interface (i.e. graphical user interface, selectable list of prior executed anticipatory Instruction Sets **526**, etc.) to cancel one or more of the prior executed anticipatory Instruction Sets **526**, and restore Device **98**, Processor **11**, Logic Circuit **250**, Application Program **18**, and/or other processing elements to a prior state. In some aspects, Confirmation Unit **550** can optionally be disabled or omitted in order to provide an uninterrupted operation of Device **98**, Processor **11**, Logic Circuit **250**, and/or Application Program **18**. For example, a thermostat may be suitable for implementing the user confirmation step, whereas, a vehicle may be less suitable for implementing such interrupting step due to the real time nature of vehicle operation.

Referring to FIG. **13**, an embodiment of Knowledge Structuring Unit **520** correlating individual Collections of Object Representations **525** with any Instruction Sets **526** and/or Extra Info **527** is illustrated. Knowledge Structuring Unit **520** comprises the functionality for structuring the knowledge of a device's operation in circumstances including objects with various properties, and/or other functionalities. Knowledge Structuring Unit **520** comprises the functionality for correlating one or more Collections of Object Representations **525** with any Instruction Sets **526** and/or Extra Info **527**. Knowledge Structuring Unit **520** comprises the functionality for creating or generating Knowledge Cell **800** and storing one or more Collections of Object Representations **525** correlated with any Instruction Sets **526** and/or Extra Info **527** into the Knowledge Cell **800**. As such, Knowledge Cell **800** comprises the functionality for storing one or more Collections of Object Representations **525** correlated with any Instruction Sets **526** and/or Extra Info **527**. Knowledge Cell **800** includes knowledge (i.e. unit of knowledge, etc.) of how Device **98** operated in a circumstance including objects with various properties. Once created or generated, Knowledge Cells **800** can be used in/as neurons, nodes, vertices, or other elements in any of the data structures or arrangements (i.e. neural networks, graphs, sequences, etc.) used for storing the knowledge of Device's **98** operation in circumstances including objects with various properties, thereby facilitating learning functionalities herein. It should be noted that Extra Info **527** may be optionally used in some implementations to enable enhanced comparisons or decision making in autonomous device operation where applicable, and that Extra Info **527** can be omitted in alternate implementations.

In some embodiments, Knowledge Structuring Unit **520** receives one or more Collections of Object Representations **525** from Object Processing Unit **93**. Knowledge Structuring Unit **520** may also receive one or more Instruction Sets **526** from Acquisition Interface **120**. Knowledge Structuring Unit **520** may further receive any Extra Info **527**. Although, Extra Info **527** is not shown in this and/or other figures for clarity of illustration, it should be noted that any Collection of Object Representations **525**, Instruction Set **526**, and/or other element may include or be associated with Extra Info **527**. Knowledge Structuring Unit **520** may correlate one or more Collections of Object Representations **525** with any Instruction Sets **526** and/or Extra Info **527**. Knowledge Structuring Unit **520** may then create Knowledge Cell **800** and store the one or more Collections of Object Representations **525** correlated with Instruction Sets **526** and/or Extra Info **527** into the Knowledge Cell **800**. Knowledge Cell **800** may include any data structure or arrangement that can facilitate such storing. For example, Knowledge Structuring Unit **520** may create Knowledge Cell **800***ax* and structure within it Collection of Object Representations **525***a***1** correlated with Instruction Sets **526***a***1**-**526***a***3** and/or any Extra Info **527** (not shown). Knowledge Structuring Unit **520** may further structure within Knowledge Cell **800***ax* a Collection of Object Representations **525***a***2** correlated with Instruction Set **526***a***4** and/or any Extra Info **527** (not shown). Knowledge Structuring Unit **520** may further structure within Knowledge Cell **800***ax* a Collection of Object Representations **525***a***3** without a correlated Instruction Set **526** and/or Extra Info **527**. Knowledge Structuring Unit **520** may further structure within Knowledge Cell **800***ax* a Collection of Object Representations **525***a***4** correlated with Instruction

Sets **526***a***5**-**526***a***6** and/or any Extra Info **527** (not shown). Knowledge Structuring Unit **520** may further structure within Knowledge Cell **800***ax* a Collection of Object Representations **525***a***5** without a correlated Instruction Set **526** and/or Extra Info **527**. Knowledge Structuring Unit **520** may structure within Knowledge Cell **800***ax* additional Collections of Object Representations **525** correlated with any number (including zero [i.e. uncorrelated]) of Instruction Sets **526** and/or Extra Info **527** by following similar logic as described above.

In some embodiments, Knowledge Structuring Unit **520** may correlate a Collection of Object Representations **525** with one or more temporally corresponding Instruction Sets **526** and/or Extra Info **527**. This way, Knowledge Structuring Unit **520** can structure the knowledge of Device's **98** operation at or around the time of generating Collections of Object Representations **525**. Such functionality enables spontaneous or seamless learning of Device's **98** operation in circumstances including objects with various properties as Device **98** is operated in real life situations. In some designs, Knowledge Structuring Unit **520** may receive a stream of Instruction Sets **526** used or executed to effect Device's **98** operations as well as a stream of Collections of Object Representations **525** as the operations are performed. Knowledge Structuring Unit **520** can then correlate Collections of Object Representations **525** from the stream of Collections of Object Representations **525** with temporally corresponding Instruction Sets **526** from the stream of Instruction Sets **526** and/or any Extra Info **527**. Collections of Object Representations **525** without a temporally corresponding Instruction Set **526** may be uncorrelated, for instance. In some aspects, Instruction Sets **526** and/or Extra Info **527** that temporally correspond to a Collection of Object Representations **525** may include Instruction Sets **526** used and/or Extra Info **527** obtained at the time of generating the Collection of Object Representations **525**. In other aspects, Instruction Sets **526** and/or Extra Info **527** that temporally correspond to a Collection of Object Representations **525** may include Instruction Sets **526** used and/or Extra Info **527** obtained within a certain time period before and/or after generating the Collection of Object Representations **525**. For example, Instruction Sets **526** and/or Extra Info **527** that temporally correspond to a Collection of Object Representations **525** may include Instruction Sets **526** used and/or Extra Info **527** obtained within 50 milliseconds, 1 second, 3 seconds, 20 seconds, 1 minute, 41 minutes, 2 hours, or any other time period before and/or after generating the Collection of Object Representations **525**. Such time periods can be defined by a user, by DCADO system administrator, or automatically by the system based on experience, testing, inquiry, analysis, synthesis, or other techniques, knowledge, or input. In other aspects, Instruction Sets **526** and/or Extra Info **527** that temporally correspond to a Collection of Object Representations **525** may include Instruction Sets **526** used and/or Extra Info **527** obtained from the time of generating the Collection of Object Representations **525** to the time of generating a next Collection of Object Representations **525**. In further aspects, Instruction Sets **526** and/or Extra Info **527** that temporally correspond to a Collection of Object Representations **525** may include Instruction Sets **526** used and/or Extra Info **527** obtained from the time of generating a previous Collection of Object Representations **525** to the time of generating the Collection of Object Representations **525**. Any other temporal relationship or correspondence between Collections of Object Representations **525** and correlated Instruction Sets **526** and/or Extra Info **527** can be implemented.

In some embodiments, Knowledge Structuring Unit **520** can structure the knowledge of Device's **98** operation in a circumstance including objects with various properties into any number of Knowledge Cells **800**. In some aspects, Knowledge Structuring Unit **520** can structure into a Knowledge Cell **800** a single Collection of Object Representations **525** correlated with any Instruction Sets **526** and/or Extra Info **527**. In other aspects, Knowledge Structuring Unit **520** can structure into a Knowledge Cell **800** any number (i.e. 2, 4, 7, 17, 29, 87, 1415, 23891, 323674, 8132401, etc.) of Collections of Object Representations **525** correlated with any Instruction Sets **526** and/or Extra Info **527**. In a special case, Knowledge Structuring Unit **520** can structure all Collections of Object Representations **525** correlated with any Instruction Sets **526** and/or Extra Info **527** into a single long Knowledge Cell **800**. In further aspects, Knowledge Structuring Unit **520** can structure Collections of Object Representations **525** correlated with any Instruction Sets **526** and/or Extra Info **527** into a plurality of Knowledge Cells **800**. In a special case, Knowledge Structuring Unit **520** can store periodic streams of Collections of Object Representations **525** correlated with any Instruction Sets **526** and/or Extra Info **527** into a plurality of Knowledge Cells **800** such as hourly, daily, weekly, monthly, yearly, or other periodic Knowledge Cells **800**.

In some embodiments, Device **98** may include a plurality of Sensors **92** and/or their corresponding Object Processing Units **93**. In one example, multiple Sensors **92** may detect objects and/or their properties from different angles or on different sides of Device **98**. In another example, one or more Sensors **92** may be placed on different sub-devices, sub-systems, or elements of Device **98**. Using multiple Sensors **92** and/or their corresponding Object Processing Units **93** may provide additional detail in learning and/or using Device's **98** circumstances for autonomous Device **98** operation. In some designs where multiple Sensors **92** and/or their corresponding Object Processing Units **93** are utilized, multiple DCADO Units **100** can also be utilized (i.e. one DCADO Unit **100** for each Sensor **92** and its corresponding Object Processing Unit **93**, etc.). In such designs, Collections of Object Representations **525** can be correlated with any Instruction Sets **526** and/or Extra Info **527** as previously described. In other designs where multiple Sensors **92** and/or their corresponding Object Processing Units **93** are utilized, collective Collections of Object Representations **525** from multiple Sensors **92** and their corresponding Object Processing Units **93** can be correlated with any Instruction Sets **526** and/or Extra Info **527**.

In some embodiments, Device **98** may include a plurality of Logic Circuits **250**, Processors **11**, Application Programs **18**, and/or other processing elements. For example, each processing element may control a sub-device, sub-system, or an element of Device **98**. Using multiple processing elements may provide enhanced control over Device's **98** operation. In some designs where multiple processing elements are utilized, multiple DCADO Units **100** can also be utilized (i.e. one DCADO Unit **100** for each processing element, etc.). In such designs, Collections of Object Representations **525** can be correlated with any Instruction Sets **526** and/or Extra Info **527** as previously described. In other designs where multiple processing elements are utilized, Collections of Object Representations **525** can be correlated with any collective Instruction Sets **526** and/or Extra Info **527** used or executed by a plurality of processing elements.

Any combination of the aforementioned multiple Sensors **92** and/or their corresponding Object Processing Units **93**,

multiple processing elements, and/or other elements can be implemented in alternate embodiments.

Referring to FIG. **14**, another embodiment of Knowledge Structuring Unit **520** correlating individual Collections of Object Representations **525** with any Instruction Sets **526** and/or Extra Info **527** is illustrated. In such embodiments, Knowledge Structuring Unit **520** may generate Knowledge Cells **800** each comprising a single Collection of Object Representations **525** correlated with any Instruction Sets **526** and/or Extra Info **527**.

Referring to FIG. **15**, an embodiment of Knowledge Structuring Unit **520** correlating streams of Collections of Object Representations **525** with any Instruction Sets **526** and/or Extra Info **527** is illustrated. For example, Knowledge Structuring Unit **520** may create Knowledge Cell **800***ax* and structure within it a stream of Collections of Object Representations **525***a***1**-**525***an* correlated with Instruction Set **526***a***1** and/or any Extra Info **527** (not shown). Knowledge Structuring Unit **520** may further structure within Knowledge Cell **800***ax* a stream of Collections of Object Representations **525***b***1**-**525***bn* correlated with Instruction Sets **526***a***2**-**526***a***4** and/or and Extra Info **527** (not shown). Knowledge Structuring Unit **520** may further structure within Knowledge Cell **800***ax* a stream of Collections of Object Representations **525***c***1**-**525***cn* without correlated Instruction Sets **526** and/or Extra Info **527**. Knowledge Structuring Unit **520** may further structure within Knowledge Cell **800***ax* a stream of Collections of Object Representations **525***d***1**-**525***dn* correlated with Instruction Sets **526***a***5**-**526***a***6** and/or any Extra Info **527** (not shown). Knowledge Structuring Unit **520** may further structure within Knowledge Cell **800***ax* additional streams of Collections of Object Representations **525** correlated with any number (including zero [i.e. uncorrelated]) of Instruction Sets **526** and/or Extra Info **527** by following similar logic as described above. The number of Collections of Object Representations **525** in some or all streams of Collections of Object Representations **525***a***1**-**525***an*, **525***b***1**-**525***bn*, etc. may be equal or different. It should be noted that n or other such letters or indicia may follow the sequence and/or context where they are indicated. Also, a same letter or indicia such as n may represent a different number in different elements of a drawing.

Referring to FIG. **16**, another embodiment of Knowledge Structuring Unit **520** correlating streams of Collections of Object Representations **525** with any Instruction Sets **526** and/or Extra Info **527** is illustrated. In such embodiments, Knowledge Structuring Unit **520** may generate Knowledge Cells **800** each comprising a single stream of Collections of Object Representations **525** correlated with any Instruction Sets **526** and/or Extra Info **527**.

Knowledgebase **530** comprises the functionality for storing the knowledge of a device's operation in circumstances including objects with various properties, and/or other functionalities. Knowledgebase **530** comprises the functionality for storing one or more Collections of Object Representations **525** correlated with any Instruction Sets **526** and/or Extra Info **527**. Knowledgebase **530** comprises the functionality for storing one or more Knowledge Cells **800** each including one or more Collections of Object Representations **525** correlated with any Instruction Sets **526** and/or Extra Info **527**. In some aspects, Collections of Object Representations **525** correlated with Instruction Sets **526** and/or Extra Info **527** can be stored directly within Knowledgebase **530** without using Knowledge Cells **800** as the intermediary data structures. In some embodiments, Knowledgebase **530** may be or include Neural Network **530***a* (later described). In other embodiments, Knowledgebase **530** may be or include Graph **530***b* (later described).

In further embodiments, Knowledgebase **530** may be or include Collection of Sequences **530***c* (later described). In further embodiments, Knowledgebase **530** may be or include Sequence **533** (later described). In further embodiments, Knowledgebase **530** may be or include Collection of Knowledge Cells **530***d* (later described). In general, Knowledgebase **530** may be or include any data structure or arrangement capable of storing the knowledge of a device's operation in circumstances including objects with various properties. Knowledgebase **530** may reside locally on Device **98**, or remotely (i.e. remote Knowledgebase **530**, etc.) on a remote computing device (i.e. server, cloud, etc.) accessible over a network or an interface.

In some embodiments, Knowledgebase **530** from one Device **98** or DCADO Unit **100** can be transferred to one or more other Devices **98** or DCADO Units **100**. Therefore, the knowledge of Device's **98** operation in circumstances including objects with various properties learned on one Device **98** or DCADO Unit **100** can be transferred to one or more other Devices **98** or DCADO Units **100**. In one example, Knowledgebase **530** can be copied or downloaded to a file or other repository from one Device **98** or DCADO Unit **100** and loaded or inserted into another Device **98** or DCADO Unit **100**. In another example, Knowledgebase **530** from one Device **98** or DCADO Unit **100** can be available on a server accessible by other Devices **98** or DCADO Units **100** over a network or an interface. Once loaded into or accessed by a receiving Device **98** or DCADO Unit **100**, the receiving Device **98** or DCADO Unit **100** can then implement the knowledge of Device's **98** operation in circumstances including objects with various properties learned on the originating Device **98** or DCADO Unit **100**.

In some embodiments, multiple Knowledgebases **530** (i.e. Knowledgebases **530** from different Devices **98** or DCADO Units **100**, etc.) can be combined to accumulate collective knowledge of operating Device **98** in circumstances including objects with various properties. In one example, one Knowledgebase **530** can be appended to another Knowledgebase **530** such as appending one Collection of Sequences **530***c* (later described) to another Collection of Sequences **530***c*, appending one Sequence **533** (later described) to another Sequence **533**, appending one Collection of Knowledge Cells **530***d* (later described) to another Collection of Knowledge Cells **530***d*, and/or appending other data structures or elements thereof. In another example, one Knowledgebase **530** can be copied into another Knowledgebase **530** such as copying one Collection of Sequences **530***c* into another Collection of Sequences **530***c*, copying one Collection of Knowledge Cells **530***d* into another Collection of Knowledge Cells **530***d*, and/or copying other data structures or elements thereof. In a further example, in the case of Knowledgebase **530** being or including Graph **530***b* or graph-like data structure (i.e. Neural Network **530***a*, tree, etc.), a union can be utilized to combine two or more Graphs **530***b* or graph-like data structures. For instance, a union of two Graphs **530***b* or graph-like data structures may include a union of their vertex (i.e. node, etc.) sets and their edge (i.e. connection, etc.) sets. Any other operations or combination thereof on graphs or graph-like data structures can be utilized to combine Graphs **530***b* or graph-like data structures. In a further example, one Knowledgebase **530** can be combined with another Knowledgebase **530** through later described learning processes where Knowledge Cells **800** may be applied one at a time and connected with prior and/or subsequent Knowledge Cells

800 such as in Graph 530*b* or Neural Network 530*a*. In such embodiments, instead of Knowledge Cells 800 generated by Knowledge Structuring Unit 520, the learning process may utilize Knowledge Cells 800 from one Knowledgebase 530 to apply them onto another Knowledgebase 530. Any other techniques known in art including custom techniques for combining data structures can be utilized for combining Knowledgebases 530 in alternate implementations. In any of the aforementioned and/or other combining techniques, similarity of elements (i.e. nodes/vertices, edges/connections, etc.) can be utilized in determining whether an element from one Knowledgebase 530 matches an element from another Knowledgebase 530, and substantially or otherwise similar elements may be considered a match for combining purposes in some designs. Any features, functionalities, and embodiments of Similarity Comparison 125 (later described) can be used in such similarity determinations. A combined Knowledgebase 530 can be offered as a network service (i.e. online application, etc.), downloadable file, or other repository to all DCADO Units 100 configured to utilize the combined Knowledgebase 530. For example, a Device 98 including or interfaced with DCADO Unit 100 having access to a combined Knowledgebase 530 can use the collective knowledge learned from multiple Devices 98 for the Device's 98 autonomous operation.

Referring to FIG. 17, the disclosed artificially intelligent devices, systems, and methods for learning and/or using a device's circumstances for autonomous device operation may include various artificial intelligence models and/or techniques. The disclosed systems, devices, and methods are independent of the artificial intelligence model and/or technique used and any model and/or technique can be utilized to facilitate the functionalities described herein. Examples of these models and/or techniques include deep learning, supervised learning, unsupervised learning, neural networks (i.e. convolutional neural network, recurrent neural network, deep neural network, etc.), search-based, logic and/or fuzzy logic-based, optimization-based, tree/graph/other data structure-based, hierarchical, symbolic and/or sub-symbolic, evolutionary, genetic, multi-agent, deterministic, probabilistic, statistical, and/or other models and/or techniques.

In one example shown in Model A, the disclosed artificially intelligent devices, systems, and methods for learning and/or using a device's circumstances for autonomous device operation may include a neural network (also referred to as artificial neural network, etc.). As such, machine learning, knowledge structuring or representation, decision making, pattern recognition, and/or other artificial intelligence functionalities may include a network of Nodes 852 (also referred to as neurons, etc.) and Connections 853 similar to that of a brain. Node 852 can store any data, object, data structure, and/or other item, or reference thereto. Node 852 may also include a function for transforming or manipulating any data, object, data structure, and/or other item. Examples of such transformation functions include mathematical functions (i.e. addition, subtraction, multiplication, division, sin, cos, log, derivative, integral, etc.), object manipulation functions (i.e. creating an object, modifying an object, deleting an object, appending objects, etc.), data structure manipulation functions (i.e. creating a data structure, modifying a data structure, deleting a data structure, creating a data field, modifying a data field, deleting a data field, etc.), and/or other transformation functions. Connection 853 may include or be associated with a value such as a symbolic label or numeric attribute (i.e. weight, cost, capacity, length, etc.). A computational model can be utilized to compute values from inputs based on a pre-programmed or learned function or method. For example, a neural network may include one or more input neurons that can be activated by inputs. Activations of these neurons can then be passed on, weighted, and transformed by a function to other neurons. Neural networks may range from those with only one layer of single direction logic to multi-layer of multi-directional feedback loops. A neural network can use weights to change the parameters of the network's throughput. A neural network can learn by input from its environment or from self-teaching using written-in rules. A neural network can be utilized as a predictive modeling approach in machine learning. An exemplary embodiment of a neural network (i.e. Neural Network 530*a*, etc.) is described later.

In another example shown in Model B, the disclosed artificially intelligent devices, systems, and methods for learning and/or using a device's circumstances for autonomous device operation may include a graph or graph-like data structure. As such, machine learning, knowledge structuring or representation, decision making, pattern recognition, and/or other artificial intelligence functionalities may include Nodes 852 (also referred to as vertices or points, etc.) and Connections 853 (also referred to as edges, arrows, lines, arcs, etc.) organized as a graph. In general, any Node 852 in a graph can be connected to any other Node 852. A Connection 853 may include unordered pair of Nodes 852 in an undirected graph or ordered pair of Nodes 852 in a directed graph. Nodes 852 can be part of the graph structure or external entities represented by indices or references. A graph can be utilized as a predictive modeling approach in machine learning. Nodes 852, Connections 853, and/or other elements or operations of a graph may include any features, functionalities, and embodiments of the aforementioned Nodes 852, Connections 853, and/or other elements or operations of a neural network, and vice versa. An exemplary embodiment of a graph (i.e. Graph 530*b*, etc.) is described later.

In a further example shown in Model C, the disclosed artificially intelligent devices, systems, and methods for learning and/or using a device's circumstances for autonomous device operation may include a tree or tree-like data structure. As such, machine learning, knowledge structuring or representation, decision making, pattern recognition, and/or other artificial intelligence functionalities may include Nodes 852 and Connections 853 (also referred to as references, edges, etc.) organized as a tree. In general, a Node 852 in a tree can be connected to any number (i.e. including zero, etc.) of children Nodes 852. A tree can be utilized as a predictive modeling approach in machine learning. Nodes 852, Connections 853, and/or other elements or operations of a tree may include any features, functionalities, and embodiments of the aforementioned Nodes 852, Connections 853, and/or other elements or operations of a neural network and/or graph, and vice versa.

In a further example shown in Model D, the disclosed artificially intelligent devices, systems, and methods for learning and/or using a device's circumstances for autonomous device operation may include a sequence or sequence-like data structure. As such, machine learning, knowledge structuring or representation, decision making, pattern recognition, and/or other artificial intelligence functionalities may include a structure of Nodes 852 and/or Connections 853 organized as a sequence. In some aspects, Connections 853 may be optionally omitted from a sequence as the sequential order of Nodes 852 in a sequence may be implied in the structure. A sequence can be utilized as a predictive modeling approach in machine learning. Nodes 852, Connections 853, and/or other elements or operations of a

sequence may include any features, functionalities, and embodiments of the aforementioned Nodes **852**, Connections **853**, and/or other elements or operations of a neural network, graph, and/or tree, and vice versa. An exemplary embodiment of a sequence (i.e. Collection of Sequences **530***c*, Sequence **533**, etc.) is described later.

In yet another example, the disclosed artificially intelligent devices, systems, and methods for learning and/or using a device's circumstances for autonomous device operation may include a search-based model and/or technique. As such, machine learning, knowledge structuring or representation, decision making, pattern recognition, and/or other artificial intelligence functionalities may include searching through a collection of possible solutions. For example, a search method can search through a neural network, graph, tree, sequence, or other data structure that includes data elements of interest. A search may use heuristics to limit the search for solutions by eliminating choices that are unlikely to lead to the goal. Heuristic techniques may provide a best guess solution. A search can also include optimization. For example, a search may begin with a guess and then refine the guess incrementally until no more refinements can be made. In a further example, the disclosed systems, devices, and methods may include logic-based model and/or technique. As such, machine learning, knowledge structuring or representation, decision making, pattern recognition, and/or other artificial intelligence functionalities can use formal or other type of logic. Logic based models may involve making inferences or deriving conclusions from a set of premises. As such, a logic based system can extend existing knowledge or create new knowledge automatically using inferences. Examples of the types of logic that can be utilized include propositional or sentential logic that comprises logic of statements which can be true or false; first-order logic that allows the use of quantifiers and predicates and that can express facts about objects, their properties, and their relations with each other; fuzzy logic that allows degrees of truth to be represented as a value between 0 and 1 rather than simply 0 (false) or 1 (true), which can be used for uncertain reasoning; subjective logic that comprises a type of probabilistic logic that may take uncertainty and belief into account, which can be suitable for modeling and analyzing situations involving uncertainty, incomplete knowledge and different world views; and/or other types of logic. In a further example, the disclosed systems, devices, and methods may include a probabilistic model and/or technique. As such, machine learning, knowledge structuring or representation, decision making, pattern recognition, and/or other artificial intelligence functionalities can be implemented to operate with incomplete or uncertain information where probabilities may affect outcomes. Bayesian network, among other models, is an example of a probabilistic tool used for purposes such as reasoning, learning, planning, perception, and/or others. One of ordinary skill in art will understand that the aforementioned artificial intelligence models and/or techniques are described merely as examples of a variety of possible implementations, and that while all possible artificial intelligence models and/or techniques are too voluminous to describe, other artificial intelligence models and/or techniques known in art are within the scope of this disclosure. One of ordinary skill in art will also recognize that an intelligent system may solve a specific problem by using any model and/or technique that works such as, for example, some systems can be symbolic and logical, some can be sub-symbolic neural networks, some can be deterministic or probabilistic, some can be hierarchical, some may include searching techniques, some may include optimization techniques, while others may use other or a combination of models and/or techniques. In general, any artificial intelligence model and/or technique can be utilized that can facilitate the functionalities described herein.

Referring to FIGS. **18**A-**18**C, embodiments of interconnected Knowledge Cells **800** and updating weights of Connections **853** are illustrated. As shown for example in FIG. **18**A, Knowledge Cell **800***za* is connected to Knowledge Cell **800***zb* and Knowledge Cell **800***zc* by Connection **853***z***1** and Connection **853***z***2**, respectively. Each of Connection **853***z***1** and Connection **853***z***2** may include or be associated with occurrence count, weight, and/or other parameter or data. The number of occurrences may track or store the number of observations that a Knowledge Cell **800** was followed by another Knowledge Cell **800** indicating a connection or relationship between them. For example, Knowledge Cell **800***za* was followed by Knowledge Cell **800***zb* 10 times as indicated by the number of occurrences of Connection **853***z***1**. Also, Knowledge Cell **800***za* was followed by Knowledge Cell **800***zc* 15 times as indicated by the number of occurrences of Connection **853***z***2**. The weight of Connection **853***z***1** can be calculated or determined as the number of occurrences of Connection **853***z***1** divided by the sum of occurrences of all connections (i.e. Connection **853***z***1** and Connection **853***z***2**, etc.) originating from Knowledge Cell **800***za*. Therefore, the weight of Connection **853***z***1** can be calculated or determined as 10/(10+15)=0.4, for example. Also, the weight of Connection **853***z***2** can be calculated or determined as 15/(10+15)=0.6, for example. Therefore, the sum of weights of Connection **853***z***1**, Connection **853***z***2**, and/or any other Connections **853** originating from Knowledge Cell **800***za* may equal to 1 or 100%. As shown for example in FIG. **18**B, in the case that Knowledge Cell **800***zd* is inserted and an observation is made that Knowledge Cell **800***zd* follows Knowledge Cell **800***za*, Connection **853***z***3** can be created between Knowledge Cell **800***za* and Knowledge Cell **800***zd*. The occurrence count of Connection **853***z***3** can be set to 1 and weight determined as 1/(10+15+1)=0.038. The weights of all other connections (i.e. Connection **853***z***1**, Connection **853***z***2**, etc.) originating from Knowledge Cell **800***za* may be updated to account for the creation of Connection **853***z***3**. Therefore, the weight of Connection **853***z***1** can be updated as 10/(10+15+1)=0.385. The weight of Connection **853***z***2** can also be updated as 15/(10+15+1)=0.577. As shown for example in FIG. **18**C, in the case that an additional occurrence of Connection **853***z***1** is observed (i.e. Knowledge Cell **800***zb* followed Knowledge Cell **800***za*, etc.), occurrence count of Connection **853***z***1** and weights of all connections (i.e. Connection **853***z***1**, Connection **853***z***2**, and Connection **853***z***3**, etc.) originating from Knowledge Cell **800***za* may be updated to account for this observation. The occurrence count of Connection **853***z***1** can be increased by 1 and its weight updated as 11/(11+15+1)=0.407. The weight of Connection **853***z***2** can also be updated as 15/(11+15+1)=0.556. The weight of Connection **853***z***3** can also be updated as 1/(11+15+1)=0.037.

Referring to FIG. **19**, an embodiment of learning Knowledge Cells **800** comprising one or more Collections of Object Representations **525** correlated with any Instruction Sets **526** and/or Extra Info **527** using Collection of Knowledge Cells **530***d* is illustrated. Collection of Knowledge Cells **530***d* comprises the functionality for storing any number of Knowledge Cells **800**. In some aspects, Knowledge Cells **800** may be stored into or applied onto Collection of Knowledge Cells **530***d* in a learning or training process. In effect, Collection of Knowledge Cells **530***d* may store

Knowledge Cells **800** that can later be used to enable autonomous Device **98** operation. In some embodiments, Knowledge Structuring Unit **520** structures or generates Knowledge Cells **800** as previously described and the system applies them onto Collection of Knowledge Cells **530***d*, thereby implementing learning Device's **98** operation in circumstances including objects with various properties. The term apply or applying may refer to storing, copying, inserting, updating, or other similar action, therefore, these terms may be used interchangeably herein depending on context. The system can perform Similarity Comparisons **125** (later described) of a newly structured Knowledge Cell **800** from Knowledge Structuring Unit **520** with Knowledge Cells **800** in Collection of Knowledge Cells **530***d*. If a substantially similar Knowledge Cell **800** is not found in Collection of Knowledge Cells **530***d*, the system may insert (i.e. copy, store, etc.) the Knowledge Cell **800** from Knowledge Structuring Unit **520** into Collection of Knowledge Cells **530***d*, for example. On the other hand, if a substantially similar Knowledge Cell **800** is found in Collection of Knowledge Cells **530***d*, the system may optionally omit inserting the Knowledge Cell **800** from Knowledge Structuring Unit **520** as inserting a substantially similar Knowledge Cell **800** may not add much or any additional knowledge to the Collection of Knowledge Cells **530***d*, for example. Also, inserting a substantially similar Knowledge Cell **800** can optionally be omitted to save storage resources and limit the number of Knowledge Cells **800** that may later need to be processed or compared. Any features, functionalities, and embodiments of Similarity Comparison **125**, importance index (later described), similarity index (later described), and/or other disclosed elements can be utilized to facilitate determination of substantial or other similarity and whether to insert a newly structured Knowledge Cell **800** into Collection of Knowledge Cells **530***d*.

For example, the system can perform Similarity Comparisons **125** (later described) of Knowledge Cell **800***ba* from Knowledge Structuring Unit **520** with Knowledge Cells **800** in Collection of Knowledge Cells **530***d*. In the case that a substantially similar match is found between Knowledge Cell **800***ba* and any of the Knowledge Cells **800** in Collection of Knowledge Cells **530***d*, the system may perform no action. The system can then perform Similarity Comparisons **125** of Knowledge Cell **800***bb* from Knowledge Structuring Unit **520** with Knowledge Cells **800** in Collection of Knowledge Cells **530***d*. In the case that a substantially similar match is not found, the system may insert a new Knowledge Cell **800** into Collection of Knowledge Cells **530***d* and copy Knowledge Cell **800***bb* into the inserted new Knowledge Cell **800**. The system can then perform Similarity Comparisons **125** of Knowledge Cell **800***bc* from Knowledge Structuring Unit **520** with Knowledge Cells **800** in Collection of Knowledge Cells **530***d*. In the case that a substantially similar match is found between Knowledge Cell **800***bc* and any of the Knowledge Cells **800** in Collection of Knowledge Cells **530***d*, the system may perform no action. The system can then perform Similarity Comparisons **125** of Knowledge Cell **800***bd* from Knowledge Structuring Unit **520** with Knowledge Cells **800** in Collection of Knowledge Cells **530***d*. In the case that a substantially similar match is not found, the system may insert a new Knowledge Cell **800** into Collection of Knowledge Cells **530***d* and copy Knowledge Cell **800***bd* into the inserted new Knowledge Cell **800**. The system can then perform Similarity Comparisons **125** of Knowledge Cell **800***be* from Knowledge Structuring Unit **520** with Knowledge Cells **800** in Collection of Knowledge Cells **530***d*. In the case that a substantially similar match is not found, the system may insert a new Knowledge Cell **800** into Collection of Knowledge Cells **530***d* and copy Knowledge Cell **800***be* into the inserted new Knowledge Cell **800**. Applying any additional Knowledge Cells **800** from Knowledge Structuring Unit **520** onto Collection of Knowledge Cells **530***d* follows similar logic or process as the above-described.

Referring to FIG. **20**, an embodiment of learning Knowledge Cells **800** comprising one or more Collections of Object Representations **525** correlated with any Instruction Sets **526** and/or Extra Info **527** using Neural Network **530***a* is illustrated. Neural Network **530***a* includes a number of neurons or Nodes **852** interconnected by Connections **853** as previously described. Knowledge Cells **800** are shown instead of Nodes **852** to simplify the illustration as Node **852** includes a Knowledge Cell **800**, for example. Therefore, Knowledge Cells **800** and Nodes **852** can be used interchangeably herein depending on context. It should be noted that Node **852** may include other elements and/or functionalities instead of or in addition to Knowledge Cell **800**. In some aspects, Knowledge Cells **800** may be stored into or applied onto Neural Network **530***a* individually or collectively in a learning or training process. In some designs, Neural Network **530***a* comprises a number of Layers **854** each of which may include one or more Knowledge Cells **800**. Knowledge Cells **800** in successive Layers **854** can be connected by Connections **853**. Connection **853** may include or be associated with occurrence count, weight, and/or other parameter or data as previously described. Neural Network **530***a* may include any number of Layers **854** comprising any number of Knowledge Cells **800**. In some aspects, Neural Network **530***a* may store Knowledge Cells **800** interconnected by Connections **853** where following a path through the Neural Network **530***a* can later be used to enable autonomous Device **98** operation. It should be understood that, in some embodiments, Knowledge Cells **800** in one Layer **854** of Neural Network **530***a* need not be connected only with Knowledge Cells **800** in a successive Layer **854**, but also in any other Layer **854**, thereby creating shortcuts (i.e. shortcut Connections **853**, etc.) through Neural Network **530***a*. A Knowledge Cell **800** can also be connected to itself such as, for example, in recurrent neural networks. In general, any Knowledge Cell **800** can be connected with any other Knowledge Cell **800** anywhere else in Neural Network **530***a*. In further embodiments, back-propagation of any data or information can be implemented. In one example, back-propagation of similarity (i.e. similarity index, etc.) of compared Knowledge Cells **800** in a path through Neural Network **530***a* can be implemented. In another example, back-propagation of errors can be implemented. Such back-propagations can then be used to adjust occurrence counts and/or weights of Connections **853** for better future predictions, for example. Any other back-propagation can be implemented for other purposes. Any combination of Nodes **852** (i.e. Nodes **852** comprising Knowledge Cells **800**, etc.), Connections **853**, Layers **854**, and/or other elements or techniques can be implemented in alternate embodiments. Neural Network **530***a* may include any type or form of a neural network known in art such as a feed-forward neural network, a back-propagating neural network, a recurrent neural network, a convolutional neural network, deep neural network, and/or others including a custom neural network.

In some embodiments, Knowledge Structuring Unit **520** structures or generates Knowledge Cells **800** and the system applies them onto Neural Network **530***a*, thereby implementing learning Device's **98** operation in circumstances including objects with various properties. The system can

perform Similarity Comparisons **125** (later described) of a Knowledge Cell **800** from Knowledge Structuring Unit **520** with Knowledge Cells **800** in a Layer **854** of Neural Network **530***a*. If a substantially similar Knowledge Cell **800** is not found in the Layer **854** of Neural Network **530***a*, the system may insert (i.e. copy, store, etc.) the Knowledge Cell **800** from Knowledge Structuring Unit **520** into the Layer **854** of Neural Network **530***a*, and create a Connection **853** to the inserted Knowledge Cell **800** from a Knowledge Cell **800** in a prior Layer **854** including assigning an occurrence count to the new Connection **853**, calculating a weight of the new Connection **853**, and updating any other Connections **853** originating from the Knowledge Cell **800** in the prior Layer **854**. On the other hand, if a substantially similar Knowledge Cell **800** is found in the Layer **854** of Neural Network **530***a*, the system may update occurrence count and weight of Connection **853** to that Knowledge Cell **800** from a Knowledge Cell **800** in a prior Layer **854**, and update any other Connections **853** originating from the Knowledge Cell **800** in the prior Layer **854**.

For example, the system can perform Similarity Comparisons **125** (later described) of Knowledge Cell **800***ba* from Knowledge Structuring Unit **520** with Knowledge Cells **800** in Layer **854***a* of Neural Network **530***a*. In the case that a substantially similar match is found between Knowledge Cell **800***ba* and Knowledge Cell **800***ea*, the system may perform no action since Knowledge Cell **800***ea* is the initial Knowledge Cell **800**. The system can then perform Similarity Comparisons **125** of Knowledge Cell **800***bb* from Knowledge Structuring Unit **520** with Knowledge Cells **800** in Layer **854***b* of Neural Network **530***a*. In the case that a substantially similar match is found between Knowledge Cell **800***bb* and Knowledge Cell **800***eb*, the system may update occurrence count and weight of Connection **853***e***1** between Knowledge Cell **800***ea* and Knowledge Cell **800***eb*, and update weights of other Connections **853** originating from Knowledge Cell **800***ea* as previously described. The system can then perform Similarity Comparisons **125** of Knowledge Cell **800***bc* from Knowledge Structuring Unit **520** with Knowledge Cells **800** in Layer **854***c* of Neural Network **530***a*. In the case that a substantially similar match is not found, the system may insert Knowledge Cell **800***ec* into Layer **854***c* and copy Knowledge Cell **800***bc* into the inserted Knowledge Cell **800***ec*. The system may also create Connection **853***e***2** between Knowledge Cell **800***eb* and Knowledge Cell **800***ec* with occurrence count of 1 and weight calculated based on the occurrence count as previously described. The system may also update weights of other Connections **853** (one in this example) originating from Knowledge Cell **800***eb* as previously described. The system can then perform Similarity Comparisons **125** of Knowledge Cell **800***bd* from Knowledge Structuring Unit **520** with Knowledge Cells **800** in Layer **854***d* of Neural Network **530***a*. In the case that a substantially similar match is not found, the system may insert Knowledge Cell **800***ed* into Layer **854***d* and copy Knowledge Cell **800***bd* into the inserted Knowledge Cell **800***ed*. The system may also create Connection **853***e***3** between Knowledge Cell **800***ec* and Knowledge Cell **800***ed* with occurrence count of 1 and weight of 1. The system can then perform Similarity Comparisons **125** of Knowledge Cell **800***be* from Knowledge Structuring Unit **520** with Knowledge Cells **800** in Layer **854***e* of Neural Network **530***a*. In the case that a substantially similar match is not found, the system may insert Knowledge Cell **800***ee* into Layer **854***e* and copy Knowledge Cell **800***be* into the inserted Knowledge Cell **800***ee*. The system may also create Connection **853***e***4** between Knowledge Cell **800***ed* and Knowledge Cell **800***ee* with occurrence count of 1 and weight of 1. Applying any additional Knowledge Cells **800** from Knowledge Structuring Unit **520** onto Neural Network **530***a* follows similar logic or process as the above-described.

Referring now to Similarity Comparison **125**, Similarity Comparison **125** comprises the functionality for comparing or matching Knowledge Cells **800** or portions thereof, and/or other functionalities. Similarity Comparison **125** comprises the functionality for comparing or matching Collections of Object Representations **525** or portions thereof. Similarity Comparison **125** comprises the functionality for comparing or matching streams of Collections of Object Representations **525** or portions thereof. Similarity Comparison **125** comprises the functionality for comparing or matching Object Representations **625** or portions thereof. Similarity Comparison **125** comprises the functionality for comparing or matching Object Properties **630** or portions thereof. Similarity Comparison **125** comprises the functionality for comparing or matching Instruction Sets **526**, Extra Info **527**, text (i.e. characters, words, phrases, etc.), numbers, and/or other elements or portions thereof. Similarity Comparison **125** may include functions, rules, and/or logic for performing matching or comparisons and for determining that while a perfect match is not found, a partial or similar match has been found. In some aspects, a partial match may include a substantially or otherwise similar match, and vice versa. Therefore, these terms may be used interchangeably herein depending on context. As such, Similarity Comparison **125** may include determining substantial similarity or substantial match of compared elements. Although, substantial similarity or substantial match is frequently used herein, it should be understood that any level of similarity, however high or low, may be utilized as defined by the rules (i.e. thresholds, etc.) for similarity. The rules for similarity or similar match can be defined by a user, by DCADO system administrator, or automatically by the system based on experience, testing, inquiry, analysis, synthesis, or other techniques, knowledge, or input. In some designs, Similarity Comparison **125** comprises the functionality to automatically define appropriately strict rules for determining similarity of the compared elements. Similarity Comparison **125** can therefore set, reset, and/or adjust the strictness of the rules for finding or determining similarity of the compared elements, thereby fine tuning Similarity Comparison **125** so that the rules for determining similarity are appropriately strict. In some aspects, the rules for determining similarity may include a similarity threshold. As such, Similarity Comparison **125** can determine similarity of compared elements if their similarity exceeds a similarity threshold. In other aspects, the rules for determining similarity may include a difference threshold. As such, Similarity Comparison **125** can determine similarity of compared elements if their difference is lower than a difference threshold. In further aspects, the rules for determining similarity may include other thresholds. Similarity Comparison **125** enables comparing circumstances including objects with various properties and determining their similarity or match. In one example, a circumstance including an object detected at a distance of 8 m and an angle/bearing of 64° relative to Device **98** may be found similar or matching by Similarity Comparison **125** to a circumstance including the same or similar object detected at a distance of 8.6 m and an angle/bearing of 59° relative to Device **98**. In another example, a circumstance including an object detected as a passenger vehicle may be found similar or matching by Similarity Comparison **125** to a circumstance including an

object detected as a sport utility vehicle. In general, any one or more properties (i.e. existence, type, identity, distance, bearing/angle, location, shape/size, activity, etc.) of one or more objects can be utilized for determining similarity or match of circumstances including objects with various properties. Therefore, Similarity Comparison **125** provides flexibility in comparing and determining similarity of a variety of possible circumstances of Device **98**.

In some embodiments where compared Knowledge Cells **800** include a single Collection of Object Representations **525**, in determining similarity of Knowledge Cells **800**, Similarity Comparison **125** can perform comparison of individual Collections of Object Representations **525** or portions (i.e. Object Representations **625**, Object Properties **630**, etc.) thereof such as comparison of Collection of Object Representations **525** or portions thereof from one Knowledge Cell **800** with Collection of Object Representations **525** or portions thereof from another Knowledge Cell **800**. In some aspects, total equivalence is achieved when Collection of Object Representations **525** or portions thereof from one Knowledge Cell **800** matches Collection of Object Representations **525** or portions thereof from another Knowledge Cell **800**. If total equivalence is not found, Similarity Comparison **125** may attempt to determine substantial or other similarity of compared Knowledge Cells **800**.

In some embodiments, in determining substantial similarity of individually compared Collections of Object Representations **525** (i.e. Collections of Object Representations **525** from the compared Knowledge Cells **800**, etc.), Similarity Comparison **125** can compare one or more Object Representations **625** or portions (i.e. Object Properties **630**, etc.) thereof from one Collection of Object Representations **525** with one or more Object Representations **625** or portions thereof from another Collection of Object Representations **525**. In some aspects, total equivalence is found when all Object Representations **625** or portions thereof from one Collection of Object Representations **525** match all Object Representations **625** or portions thereof from another Collection of Object Representations **525**. In other aspects, if total equivalence is not found, Similarity Comparison **125** may attempt to determine substantial similarity of compared Collections of Object Representations **525**. In one example, substantial similarity can be achieved when most of the Object Representations **625** or portions thereof from the compared Collections of Object Representations **525** match or substantially match. In another example, substantial similarity can be achieved when at least a threshold number (i.e. 1, 2, 4, 7, 18, etc.) or percentage (i.e. 41%, 62%, 79%, 85%, 93%, etc.) of Object Representations **625** or portions thereof from the compared Collections of Object Representations **525** match or substantially match. Similarly, substantial similarity can be achieved when the number or percentage of matching or substantially matching Object Representations **625** or portions thereof from the compared Collections of Object Representations **525** exceeds a threshold number (i.e. 1, 2, 4, 7, 18, etc.) or a threshold percentage (i.e. 41%, 62%, 79%, 85%, 93%, etc.). In a further example, substantial similarity can be achieved when all but a threshold number or percentage of Object Representations **625** or portions thereof from the compared Collections of Object Representations **525** match or substantially match. Such thresholds can be defined by a user, by DCADO system administrator, or automatically by the system based on experience, testing, inquiry, analysis, synthesis, and/or other techniques, knowledge, or input. In some aspects, Similarity Comparison **125** can utilize the importance (i.e. as indicated by importance index [later described], etc.) of Object Representations **625** or portions thereof for determining substantial similarity of Collections of Object Representations **525**. For example, substantial similarity can be achieved when matches or substantial matches are found with respect to more important Object Representations **625** or portions thereof such as Object Representations **625** representing near Objects **615**, Object Representations **625** representing large Objects **615**, etc., thereby tolerating mismatches in less important Object Representations **625** or portions thereof such as Object Representations **625** representing distant Objects **615**, Object Representations **625** representing small Objects **615**, etc. In general, any Object Representation **625** or portion thereof can be assigned higher or lower importance. In further aspects, Similarity Comparison **125** can omit some of the Object Representations **625** or portions thereof from the comparison in determining substantial similarity of Collections of Object Representations **525**. In one example, Object Representations **625** representing distant Objects **615** can be omitted from comparison. In another example, Object Representations **625** representing small Objects **615** can be omitted from comparison. In general, any Object Representation **625** or portion thereof can be omitted from comparison depending on implementation.

Similarity Comparison **125** can automatically adjust (i.e. increase or decrease) the strictness of the rules for determining substantial similarity of Collections of Object Representations **525**. In some aspects, such adjustment in strictness can be done by Similarity Comparison **125** in response to determining that total equivalence of compared Collections of Object Representations **525** had not been found. Similarity Comparison **125** can keep adjusting the strictness rules until a substantial similarity is found. All the rules or settings of substantial similarity can be set, reset, or adjusted by Similarity Comparison **125** in response to another strictness level determination. For example, Similarity Comparison **125** may attempt to find a match or substantial match in a certain percentage (i.e. 81%, etc.) of Object Representations **625** or portions thereof from the compared Collections of Object Representations **525**. If the comparison does not determine substantial similarity of compared Collections of Object Representations **525**, Similarity Comparison **125** may decide to decrease the strictness of the rules. In response, Similarity Comparison **125** may attempt to find fewer matching or substantially matching Object Representations **625** or portions thereof than in the previous attempt using stricter rules. If the comparison still does not determine substantial similarity of compared Collections of Object Representations **525**, Similarity Comparison **125** may further decrease the strictness (i.e. down to a certain minimum strictness or threshold, etc.) by requiring fewer Object Representations **625** or portions thereof to match or substantially match, thereby further increasing a chance of finding substantial similarity in compared Collections of Object Representations **525**.

Where a reference to Object Representation **625** is used herein it should be understood that a portion of Object Representation **625** (i.e. Object Property **630**, etc.) or a plurality of Object Representations **625** can be used instead of or in addition to the Object Representation **625**. In one example, instead of or in addition to Object Representation **625**, Object Properties **630** and/or other portions that constitute an Object Representation **625** can be compared. In another example, instead of or in addition to Object Representation **625**, plurality of Object Representations **625** can be compared. As such, any operations, rules, logic, and/or functions operating on Object Representation **625** may similarly apply to any portion of Object Representation **625**

and/or a plurality of Object Representations **625** as applicable. In general, whole Object Representations **625**, portions of Object Representations **625**, and/or pluralities of Object Representations **625**, including any operations thereon, can be combined to arrive at desired results. Some or all of the above-described rules, logic, and/or techniques can be utilized alone or in combination with each other or with other rules, logic, and/or techniques. One of ordinary skill in art will recognize that other techniques known in art for determining similarity of Object Representations **625** and/or other data that would be too voluminous to describe are within the scope of this disclosure.

In some embodiments, in determining substantial similarity of Object Representations **625** (i.e. Object Representations **625** from the compared Collections of Object Representations **525**, etc.), Similarity Comparison **125** can compare Object Properties **630** or portions (i.e. characters, words, numbers, etc.) thereof from one Object Representation **625** with Object Properties **630** or portions thereof from another Object Representation **625**. In some aspects, total equivalence is found when all Object Properties **630** or portions thereof of one Object Representation **625** match all Object Properties **630** or portions thereof of another Object Representation **625**. In other aspects, if total equivalence is not found, Similarity Comparison **125** may attempt to determine substantial similarity of compared Object Representations **625**. In one example, substantial similarity can be achieved when most of the Object Properties **630** or portions thereof from the compared Object Representations **625** match or substantially match. In another example, substantial similarity can be achieved when at least a threshold number (i.e. 1, 2, 3, 6, 11, etc.) or percentage (i.e. 55%, 61%, 78%, 82%, 99%, etc.) of Object Properties **630** or portions thereof from the compared Object Representations **625** match or substantially match. Similarly, substantial similarity can be achieved when the number or percentage of matching or substantially matching Object Properties **630** or portions thereof from the compared Object Representations **625** exceeds a threshold number (i.e. 1, 2, 3, 6, 11, etc.) or a threshold percentage (i.e. 55%, 61%, 78%, 82%, 99%, etc.). In a further example, substantial similarity can be achieved when all but a threshold number or percentage of Object Properties **630** or portions thereof from the compared Object Representations **625** match or substantially match. Such thresholds can be defined by a user, by DCADO system administrator, or automatically by the system based on experience, testing, inquiry, analysis, synthesis, and/or other techniques, knowledge, or input. In further aspects, Similarity Comparison **125** can utilize Categories **635** associated with Object Properties **630** for determining substantial similarity of Object Representations **625**. In one example, Object Properties **630** or portions thereof from the compared Object Representations **625** in a same Category **635** may be compared. This way, Object Properties **630** or portions thereof can be compared with their own peers. In one instance, Object Properties **630** or portions thereof from the compared Object Representations **625** in Category **635** "Type" may be compared. Any text comparison technique can be utilized in such comparing. In another instance, Object Properties **630** or portions thereof from the compared Object Representations **625** in Category **635** "Distance" or "Bearing" may be compared. Any number comparison technique can be utilized in such comparing. In a further instance, Object Properties **630** or portions thereof from the compared Object Representations **625** in Category **635** "Shape" may be compared. Any model, point cloud, or other computer construct comparison technique can be utilized in such comparing. In further aspects, Similarity Comparison **125** can utilize the importance (i.e. as indicated by importance index [later described], etc.) of Object Properties **630** or portions thereof for determining substantial similarity of Object Representations **625**. For example, substantial similarity can be achieved when matches or substantial matches are found with respect to more important Object Properties **630** or portions thereof such as Object Properties **630** or portions thereof in Categories **635** "Type", "Distance", "Bearing", etc., thereby tolerating mismatches in less important Object Properties **630** or portions thereof such as Object Properties **630** or portions thereof in Categories **635** "Identity", "Shape", etc. In general, any Object Property **630** or portion thereof can be assigned higher or lower importance. In further aspects, Similarity Comparison **125** can omit some of the Object Properties **630** or portions thereof from the comparison in determining substantial similarity of Object Representations **625**. In one example, Object Properties **630** or portions thereof in Category **635** "Identity" can be omitted from comparison. In another example, Object Properties **630** or portions thereof in Category **635** "Shape" can be omitted from comparison. In general, any Object Property **630** or portion thereof can be omitted from comparison depending on implementation.

Similarity Comparison **125** can automatically adjust (i.e. increase or decrease) the strictness of the rules for determining substantial similarity of Object Representations **625**. In some aspects, such adjustment in strictness can be done by Similarity Comparison **125** in response to determining that total equivalence of compared Object Representations **625** had not been found. Similarity Comparison **125** can keep adjusting the strictness rules until a substantial similarity is found. All the rules or settings of substantial similarity can be set, reset, or adjusted by Similarity Comparison **125** in response to another strictness level determination. For example, Similarity Comparison **125** may attempt to find a match or substantial match in a certain percentage (i.e. 87%, etc.) of Object Properties **630** or portions thereof from the compared Object Representations **625**. If the comparison does not determine substantial similarity of compared Object Representations **625**, Similarity Comparison **125** may decide to decrease the strictness of the rules. In response, Similarity Comparison **125** may attempt to find fewer matching or substantially matching Object Properties **630** or portions thereof than in the previous attempt using stricter rules. If the comparison still does not determine substantial similarity of compared Object Representations **625**, Similarity Comparison **125** may further decrease the strictness (i.e. down to a certain minimum strictness or threshold, etc.) by requiring fewer Object Properties **630** or portions thereof to match or substantially match, thereby further increasing a chance of finding substantial similarity in compared Object Representations **625**. In further aspects, an adjustment in strictness can be done by Similarity Comparison **125** in response to determining that multiple substantially similar Object Representations **625** had been found. Similarity Comparison **125** can keep adjusting the strictness of the rules until a best of the substantially similar Object Representations **625** is found. For example, Similarity Comparison **125** may attempt to find a match or substantial match in a certain percentage (i.e. 65%, etc.) of Object Properties **630** or portions thereof from the compared Object Representations **625**. If the comparison determines a number of substantially similar Object Representations **625**, Similarity Comparison **125** may decide to increase the strictness of the rules to decrease the number of substantially similar Object Representations **625**. In response, Similarity

Comparison **125** may attempt to find more matching or substantially matching Object Properties **630** or portions thereof in addition to the earlier found Object Properties **630** or portions thereof to limit the number of substantially similar Object Representations **625**. If the comparison still provides more than one substantially similar Object Representation **625**, Similarity Comparison **125** may further increase the strictness by requiring additional Object Properties **630** or portions thereof to match or substantially match, thereby further narrowing the number of substantially similar Object Representations **625** until a best substantially similar Object Representation **625** is found.

Where a reference to Object Property **630** is used herein it should be understood that a portion of Object Property **630** or a plurality of Object Properties **630** can be used instead of or in addition to the Object Property **630**. In one example, instead of or in addition to Object Property **630**, characters, words, numbers, and/or other portions that constitute an Object Property **630** can be compared. In another example, instead of or in addition to Object Property **630**, a plurality of Object Properties **630** can be compared. As such, any operations, rules, logic, and/or functions operating on Object Property **630** may similarly apply to any portion of Object Property **630** and/or a plurality of Object Properties **630** as applicable. In general, whole Object Properties **630**, portions of Object Properties **630**, and/or pluralities of Object Properties **630**, including any operations thereon, can be combined to arrive at desired results. Some or all of the above-described rules, logic, and/or techniques can be utilized alone or in combination with each other or with other rules, logic, and/or techniques. One of ordinary skill in art will recognize that other techniques known in art for determining similarity of Object Properties **630** and/or other data that would be too voluminous to describe are within the scope of this disclosure.

In some embodiments where compared Knowledge Cells **800** include a stream of Collections of Object Representations **525**, in determining similarity of Knowledge Cells **800**, Similarity Comparison **125** can perform collective comparison of Collections of Object Representations **525** or portions (i.e. Object Representations **625**, Object Properties **630**, etc.) thereof such as comparison of a stream of Collections of Object Representations **525** or portions thereof from one Knowledge Cell **800** with a stream of Collections of Object Representations **525** or portions thereof from another Knowledge Cell **800**. Similarity Comparison **125** of collectively compared Collections of Object Representations **525** or portions thereof may include any features, functionalities, and embodiments of the previously described Similarity Comparison **125** of individually compared Collections of Object Representations **525** or portions thereof. In some aspects, total equivalence is found when all Collections of Object Representations **525** or portions thereof from one Knowledge Cell **800** match all Collections of Object Representations **525** or portions thereof from another Knowledge Cell **800**. If total equivalence is not found, Similarity Comparison **125** may attempt to determine substantial or other similarity of compared Knowledge Cells **800**. In one example, substantial similarity can be achieved when most of the Collections of Object Representations **525** or portions thereof from the compared Knowledge Cells **800** match or substantially match. In another example, substantial similarity can be achieved when at least a threshold number (i.e. 1, 2, 4, 9, 33, 138, etc.) or percentage (i.e. 39%, 58%, 77%, 88%, 94%, etc.) of Collections of Object Representations **525** or portions thereof from the compared Knowledge Cells **800** match or substantially match. Similarly, substantial similarity can be achieved when the number or percentage of matching or substantially matching Collections of Object Representations **525** or portions thereof from the compared Knowledge Cells **800** exceeds a threshold number (i.e. 1, 2, 4, 9, 33, 138, etc.) or a threshold percentage (i.e. 39%, 58%, 77%, 88%, 94%, etc.). In a further example, substantial similarity can be achieved when all but a threshold number or percentage of Collections of Object Representations **525** or portions thereof from the compared Knowledge Cells **800** match or substantially match. Such thresholds can be defined by a user, by DCADO system administrator, or automatically by the system based on experience, testing, inquiry, analysis, synthesis, and/or other techniques, knowledge, or input. In some aspects, Similarity Comparison **125** can utilize the importance (i.e. as indicated by importance index [later described], etc.) of Collections of Object Representations **525** or portions thereof for determining substantial similarity of Knowledge Cells **800**. In one example, substantial similarity can be achieved when matches or substantial matches are found with respect to more important Collections of Object Representations **525** or portions thereof such as more substantive or larger Collections of Object Representations **525** (i.e. Collections of Object Representations **525** comprising a higher number of Object Representations **625**, etc.) or portions thereof, etc., thereby tolerating mismatches in less important Collections of Object Representations **525** or portions thereof such as less substantive or smaller Collections of Object Representations **525** (i.e. Collections of Object Representations **525** comprising a lower number of Object Representations **625**, etc.) or portions thereof, etc. In general, any Collection of Object Representations **525** or portion thereof can be assigned higher or lower importance. In other aspects, Similarity Comparison **125** can utilize the order of Collections of Object Representations **525** or portions thereof for determining substantial similarity of Knowledge Cells **800**. In one example, substantial similarity can be achieved when matches or substantial matches are found in earlier Collections of Object Representations **525** or portions thereof from the compared Knowledge Cells **800**, thereby tolerating mismatches in later Collections of Object Representations **525** or portions thereof. In another example, substantial similarity can be achieved when matches or substantial matches are found in corresponding (i.e. similarity ordered, temporally related, etc.) Collections of Object Representations **525** or portions thereof from the compared Knowledge Cells **800**. In one instance, a 94th Collection of Object Representations **525** or portions thereof from one Knowledge Cell **800** can be compared with a 94th Collection of Object Representations **525** or portions thereof from another Knowledge Cell **800**. In another instance, a 94th Collection of Object Representations **525** or portions thereof from one Knowledge Cell **800** can be compared with a number of Collections of Object Representations **525** or portions thereof around (i.e. preceding and/or following) a 94th Collection of Object Representations **525** from another Knowledge Cell **800**. This way, flexibility can be implemented in finding a substantially similar Collection of Object Representations **525** or portions thereof if the Collections of Object Representations **525** or portions thereof in the compared Knowledge Cells **800** are not perfectly aligned. In a further instance, Similarity Comparison **125** can utilize Dynamic Time Warping (DTW) and/or other techniques known in art for comparing and/or aligning temporal sequences (i.e. streams of Collections of Object Representations **525** or portions thereof, etc.) that may vary in time or speed. In further aspects, Similarity Comparison

125 can omit some of the Collections of Object Representations 525 or portions thereof from the comparison in determining substantial similarity of Knowledge Cells 800. In one example, less substantive or smaller Collections of Object Representations 525 or portions thereof can be omitted from comparison. In another example, some or all Collections of Object Representations 525 or portions thereof related to a specific time period can be omitted from comparison. In general, any Collection of Object Representations 525 or portion thereof can be omitted from comparison depending on implementation.

Similarity Comparison 125 can automatically adjust (i.e. increase or decrease) the strictness of the rules for determining substantial similarity of Knowledge Cells 800. In some aspects, such adjustment in strictness can be done by Similarity Comparison 125 in response to determining that total equivalence of compared Knowledge Cells 800 had not been found. Similarity Comparison 125 can keep adjusting the strictness of the rules until substantial similarity is found. All the rules or settings of substantial similarity can be set, reset, or adjusted by Similarity Comparison 125 in response to another strictness level determination. For example, Similarity Comparison 125 may attempt to find a match or substantial match in a certain percentage (i.e. 92%, etc.) of Collections of Object Representations 525 or portions thereof from the compared Knowledge Cells 800. If the comparison does not determine substantial similarity of compared Knowledge Cells 800, Similarity Comparison 125 may decide to decrease the strictness of the rules. In response, Similarity Comparison 125 may attempt to find fewer matching or substantially matching Collections of Object Representations 525 or portions thereof than in the previous attempt using stricter rules. If the comparison still does not determine substantial similarity of compared Knowledge Cells 800, Similarity Comparison 125 may further decrease (i.e. down to a certain minimum strictness or threshold, etc.) the strictness by requiring fewer Collections of Object Representations 525 or portions thereof to match or substantially match, thereby further increasing a chance of finding substantial similarity in compared Knowledge Cells 800. In further aspects, an adjustment in strictness can be done by Similarity Comparison 125 in response to determining that multiple substantially similar Knowledge Cells 800 had been found. Similarity Comparison 125 can keep adjusting the strictness of the rules until a best of the substantially similar Knowledge Cells 800 is found. For example, Similarity Comparison 125 may attempt to find a match or substantial match in a certain percentage (i.e. 71%, etc.) of Collections of Object Representations 525 or portions thereof from the compared Knowledge Cells 800. If the comparison determines a number of substantially similar Knowledge Cells 800, Similarity Comparison 125 may decide to increase the strictness of the rules to decrease the number of substantially similar Knowledge Cells 800. In response, Similarity Comparison 125 may attempt to find more matching or substantially matching Collections of Object Representations 525 or portions thereof in addition to the earlier found Collections of Object Representations 525 or portions thereof to limit the number of substantially similar Knowledge Cells 800. If the comparison still provides more than one substantially similar Knowledge Cell 800, Similarity Comparison 125 may further increase the strictness by requiring additional Collections of Object Representations 525 or portions thereof to match or substantially match, thereby further narrowing the number of substantially similar Knowledge Cells 800 until a best substantially similar Knowledge Cell 800 is found.

Some or all of the aforementioned rules, logic, and/or techniques for determining substantial similarity of Knowledge Cells 800 can be utilized alone or in combination with each other or with other rules, logic, and/or techniques. One of ordinary skill in art will recognize that other techniques known in art for determining similarity of Knowledge Cells 800 and/or other data that would be too voluminous to describe are within the scope of this disclosure.

In any of the comparisons involving numbers such as, for example, Object Properties 630 including numbers (i.e. distances, bearings/angles, etc.), Similarity Comparison 125 can compare a number from one Object Property 630 with a number from another Object Property 630. In some aspects, total equivalence is found when the number from one Object Property 630 equals the number from another Object Property 630. In other aspects, if total equality is not found, Similarity Comparison 125 may attempt to determine substantial similarity of the compared numbers using a tolerance or threshold for determining a match. In some aspects, Similarity Comparison 125 can utilize a threshold for acceptable number difference in determining a match of compared numbers. For example, a threshold for acceptable number difference (i.e. absolute difference, etc.) can be set at 10. Therefore, 130 matches or is sufficiently similar to 135 because the number difference (i.e. 5 in this example) is lower than the threshold for acceptable number difference (i.e. 10 in this example, etc.). Furthermore, 130 does not match or is not sufficiently similar to 143 because the number difference (i.e. 13 in this example) is greater than the threshold for acceptable number difference. Any other threshold for acceptable number difference can be used such as 0.024, 1, 8, 15, 77, 197, 2438, 728322, and/or others. In other aspects, Similarity Comparison 125 can utilize a threshold for acceptable percentage difference in determining a match of compared numbers. For example, a threshold for acceptable percentage difference can be set at 10%. Therefore, 100 matches or is sufficiently similar to 106 because the percentage difference (i.e. 6% in this example) is lower than the threshold for acceptable percentage difference (i.e. 10% in this example). Furthermore, 100 does not match or is not sufficiently similar to 84 because the percentage difference (i.e. 16% in this example) is higher than the threshold for acceptable percentage difference. Any other threshold for acceptable percentage difference can be used such as 0.68%, 1%, 3%, 11%, 33%, 69%, 87%, and/or others. The aforementioned thresholds can be defined by a user, by DCADO system administrator, or automatically by the system based on experience, testing, inquiry, analysis, synthesis, or other techniques, knowledge, or input. Other techniques known in art for comparing numbers can be utilized herein.

In any of the comparisons involving text such as, for example, Object Properties 630 including text (i.e. types, identities, etc.), Similarity Comparison 125 can compare words, characters, and/or other text from one Object Property 630 with words, characters, and/or other text from another Object Property 630. In some aspects, total equivalence is found when all words, characters, and/or other text from one Object Property 630 match all words, characters, and/or other text from another Object Property 630. In other aspects, if total equivalence is not found, Similarity Comparison 125 may attempt to determine substantial similarity of compared Object Properties 630. In one example, substantial similarity can be achieved when most of the words, characters, and/or other text from the compared Object Properties 630 match or substantially match. In another example, substantial similarity can be achieved when at least

a threshold number (i.e. 1, 2, 3, 4, 7, 11, etc.) or percentage (i.e. 38%, 63%, 77%, 84%, 98%, etc.) of words, characters, and/or other text from the compared Object Properties **630** match or substantially match. Similarly, substantial similarity can be achieved when the number or percentage of matching or substantially matching words, characters, and/or other text from the compared Object Properties **630** exceeds a threshold number (i.e. 1, 2, 3, 4, 7, 11, etc.) or a threshold percentage (i.e. 48%, 63%, 77%, 84%, 98%, etc.). In a further example, substantial similarity can be achieved when all but a threshold number or percentage of words, characters, and/or other text from the compared Object Properties **630** match or substantially match. Such thresholds can be defined by a user, by DCADO system administrator, or automatically by the system based on experience, testing, inquiry, analysis, synthesis, and/or other techniques, knowledge, or input. In further aspects, Similarity Comparison **125** can utilize the importance (i.e. as indicated by importance index [later described], etc.) of words, characters, and/or other text for determining substantial similarity of Object Properties **630**. For example, substantial similarity can be achieved when matches or substantial matches are found with respect to more important words, characters, and/or other text such as longer words and/or other text, thereby tolerating mismatches in less important words, characters, and/or other text such as shorter words and/or other text. In general, any word, character, and/or other text can be assigned higher or lower importance. In further aspects, Similarity Comparison **125** can utilize the order of words, characters, and/or other text for determining substantial similarity of Object Properties **630**. For example, substantial similarity can be achieved when matches or substantial matches are found with respect to front-most words, characters, and/or other text, thereby tolerating mismatches in later words, characters, and/or other text. In further aspects, Similarity Comparison **125** can utilize semantic conversion to account for variations of words and/or other text. In one example, Object Property **630** may include a word "house". In addition to searching for the exact word in a compared Object Property **630**, Similarity Comparison **125** can employ semantic conversion and attempt to match "home", "residence", "dwelling", "place", or other semantically similar variations of the word with a meaning "house". In another example, Object Property **630** may include a word "buy". In addition to searching for the exact word in a compared Object Property **630**, Similarity Comparison **125** can employ semantic conversion and attempt to match "buying", "bought", or other semantically similar variations of the word with a meaning "buy" in different tenses. Any other grammatical analysis or transformation can be utilized to cover the full scope of word and/or other text variations. In some designs, semantic conversion can be implemented using a thesaurus or dictionary. In another example, semantic conversion can be implemented using a table where each row comprises semantically similar variations of a word and/or other text. In further aspects, Similarity Comparison **125** can utilize a language model for understanding or interpreting the concepts contained in the words and/or other text and compare the concepts instead of or in addition to the words and/or other text. Examples of language models include unigram model, n-gram model, neural network language model, bag of words model, and/or others. Any of the techniques for matching of words can similarly be used for matching of concepts. In further aspects, Similarity Comparison **125** can omit some of the words, characters, and/or other text from the comparison in determining substantial similarity of Object Properties **630**. In one example, rear-most words, characters, and/or other text can be omitted from comparison. In another example, shorter words and/or other text can be omitted from comparison. In general, any word, character, and/or other text can be omitted from comparison depending on implementation. Other techniques known in art for comparing words, characters, and/or other text can be utilized herein.

In some embodiments, Similarity Comparison **125** can compare one or more Extra Info **527** (i.e. time information, location information, computed information, contextual information, and/or other information, etc.) in addition to or instead of comparing Collections of Object Representations **525** or portions thereof in determining substantial similarity of Knowledge Cells **800**. Extra Info **527** can be set to be less, equally, or more important (i.e. as indicated by importance index [later described], etc.) than Collections of Object Representations **525**, Object Representations **625**, Object Properties **630**, and/or other elements in the comparison. Since Extra Info **527** may include any contextual or other information that can be useful in determining similarity of any compared elements, Extra Info **527** can be used to enhance any of the aforementioned similarity determinations as applicable.

In some embodiments, Similarity Comparison **125** can also compare one or more Instruction Sets **526** in addition to or instead of comparing Collections of Object Representations **525** or portions thereof in determining substantial similarity of Knowledge Cells **800**. In some aspects, Similarity Comparison **125** can compare portions of Instruction Sets **526** to determine substantial or other similarity of Instruction Sets **526**. Similar to the above-described thresholds, thresholds for the number or percentage of matching portions of the compared Instruction Sets **526** can be utilized in determining substantial or other similarity of the compared Instruction Sets **526**. Such thresholds can be defined by a user, by DCADO system administrator, or automatically by the system based on experience, testing, inquiry, analysis, synthesis, and/or other techniques, knowledge, or input. In other aspects, Similarity Comparison **125** can compare text (i.e. characters, words, phrases, etc.), numbers, or other data (i.e. bits, etc.) to determine substantial or other similarity of Instruction Sets **526**. Any other comparison technique can be utilized in comparing Instruction Sets **526** in alternate implementations. Instruction Sets **526** can be set to be less, equally, or more important (i.e. as indicated by importance index [later described], etc.) than Collections of Object Representations **525**, Object Representations **625**, Object Properties **630**, Extra Info **527**, and/or other elements in the comparison.

In some embodiments, an importance index (not shown) or other importance ranking technique can be used in any of the previously described comparisons or other processing involving elements of different importance. Importance index indicates importance of the element to or with which the index is assigned or associated. For example, importance index may indicate importance of a Knowledge Cell **800**, Collection of Object Representations **525**, Object Representation **625**, Object Property **630**, Instruction Set **526**, Extra Info **527**, and/or other element to or with which the index is assigned or associated. In some aspects, importance index on a scale from 0 to 1 can be utilized, although, any other range can also be utilized. Importance index can be stored in or associated with the element to which the index pertains. Importance indexes of various elements can be defined by a user, by DCADO system administrator, or automatically by the system based on experience, testing, inquiry, analysis, synthesis, or other techniques, knowledge, or input. In one

example, a higher Importance index can be assigned to more substantive or larger Collections of Object Representations **525** (i.e. Collections of Object Representations **525** comprising a higher number of Object Representations **625**, etc.). In another example, a higher importance index can be assigned to Object Representations **625** representing closer, larger, and/or other Objects **615**. Any importance index can be assigned to or associated with any element described herein depending on implementation. Any importance ranking technique can be utilized as or instead of importance index in alternate embodiments.

In some embodiments, Similarity Comparison **125** may generate a similarity index (not shown) for any of the compared elements. Similarity index indicates how well an element is matched with another element. For example, similarity index indicates how well a Knowledge Cell **800**, Collection of Object Representations **525**, Object Representation **625**, Object Property **630**, Instruction Set **526**, Extra Info **527**, and/or other element is matched with a compared element. In some aspects, similarity index on a scale from 0 to 1 can be utilized, although, any other range can also be utilized. Similarity index can be generated by Similarity Comparison **125** whether substantial or other similarity between the compared elements is achieved or not. In one example, similarity index can be determined for a Knowledge Cell **800** based on a ratio/percentage of matched or substantially matched Collections of Object Representations **525** relative to the number of Collections of Object Representations **525** in the compared Knowledge Cell **800**. Specifically, similarity index of 0.91 is determined if 91% of Collections of Object Representations **525** of one Knowledge Cell **800** match or substantially match Collections of Object Representations **525** of another Knowledge Cell **800**. In some designs, importance (i.e. as indicated by importance index, etc.) of one or more Collections of Object Representations **525** can be included in the calculation of a weighted similarity index. Similar determination of similarity index can be implemented with Collections of Object Representations **525**, Object Representations **625**, Object Properties **630**, Instruction Sets **526**, Extra Info **527**, and/or other elements or portions thereof. Any combination of the aforementioned similarity index determinations or calculations can be utilized in alternate embodiments. Any similarity ranking technique can be utilized to determine or calculate similarity index in alternate embodiments.

Referring to FIG. **21**, an embodiment of learning Knowledge Cells **800** comprising one or more Collections of Object Representations **525** correlated with any Instruction Sets **526** and/or Extra Info **527** using Neural Network **530***a* comprising shortcut Connections **853** is illustrated. In some designs, Knowledge Cells **800** in one Layer **854** of Neural Network **530***a* can be connected with Knowledge Cells **800** in any Layer **854**, not only in a successive Layer **854**, thereby creating shortcuts (i.e. shortcut Connections **853**, etc.) through Neural Network **530***a*. In some aspects, creating a shortcut Connection **853** can be implemented by performing Similarity Comparisons **125** of a Knowledge Cell **800** from Knowledge Structuring Unit **520** with Knowledge Cells **800** in any Layer **854** when applying (i.e. storing, copying, etc.) the Knowledge Cell **800** from Knowledge Structuring Unit **520** onto Neural Network **530***a*. Once created, shortcut Connections **853** enable a wider variety of Knowledge Cells **800** to be considered when selecting a path through Neural Network **530***a*. In some embodiments, Knowledge Structuring Unit **520** structures or generates Knowledge Cells **800** and the system applies them onto Neural Network **530***a*, thereby implementing learning Device's **98** operation in circumstances including objects with various properties. The system can perform Similarity Comparisons **125** of a Knowledge Cell **800** from Knowledge Structuring Unit **520** with Knowledge Cells **800** in one or more Layers **854** of Neural Network **530***a*. If a substantially similar Knowledge Cell **800** is not found in the one or more Layers **854** of Neural Network **530***a*, the system may insert (i.e. copy, store, etc.) the Knowledge Cell **800** from Knowledge Structuring Unit **520** into a Layer **854** of Neural Network **530***a*, and create a Connection **853** to the inserted Knowledge Cell **800** from a prior Knowledge Cell **800** including assigning an occurrence count to the new Connection **853**, calculating a weight of the new Connection **853**, and updating any other Connections **853** originating from the prior Knowledge Cell **800**. On the other hand, if a substantially similar Knowledge Cell **800** is found in the one or more Layers **854** of Neural Network **530***a*, the system may update occurrence count and weight of Connection **853** to that Knowledge Cell **800** from a prior Knowledge Cell **800**, and update any other Connections **853** originating from the prior Knowledge Cell **800**. Any of the previously described and/or other techniques for comparing, inserting, updating, and/or other operations on Knowledge Cells **800**, Connections **853**, Layers **854**, and/or other elements can similarly be utilized in Neural Network **530***a* that comprises shortcut Connections **853**.

Referring to FIG. **22**, an embodiment of learning Knowledge Cells **800** comprising one or more Collections of Object Representations **525** correlated with any Instruction Sets **526** and/or Extra Info **527** using Graph **530***b* is illustrated. In some aspects, any Knowledge Cell **800** can be connected with any other Knowledge Cell **800** in Graph **530***b*. In other aspects, any Knowledge Cell **800** can be connected with itself and/or any other Knowledge Cell **800** in Graph **530***b*. In some embodiments, Knowledge Structuring Unit **520** structures or generates Knowledge Cells **800** and the system applies (i.e. store, copy, etc.) them onto Graph **530***b*, thereby implementing learning Device's **98** operation in circumstances including objects with various properties. The system can perform Similarity Comparisons **125** of a Knowledge Cell **800** from Knowledge Structuring Unit **520** with Knowledge Cells **800** in Graph **530***b*. If a substantially similar Knowledge Cell **800** is not found in Graph **530***b*, the system may insert (i.e. copy, store, etc.) the Knowledge Cell **800** from Knowledge Structuring Unit **520** into Graph **530***b*, and create a Connection **853** to the inserted Knowledge Cell **800** from a prior Knowledge Cell **800** including assigning an occurrence count to the new Connection **853**, calculating a weight of the new Connection **853**, and updating any other Connections **853** originating from the prior Knowledge Cell **800**. On the other hand, if a substantially similar Knowledge Cell **800** is found in Graph **530***b*, the system may update occurrence count and weight of Connection **853** to that Knowledge Cell **800** from a prior Knowledge Cell **800**, and update any other Connections **853** originating from the prior Knowledge Cell **800**. Any of the previously described and/or other techniques for comparing, inserting, updating, and/or other operations on Knowledge Cells **800**, Connections **853**, and/or other elements can similarly be utilized in Graph **530***b*.

For example, the system can perform Similarity Comparisons **125** of Knowledge Cell **800***ba* from Knowledge Structuring Unit **520** with Knowledge Cells **800** in Graph **530***b*. In the case that a substantially similar match is not found, the system may insert Knowledge Cell **800***ha* into Graph **530***b* and copy Knowledge Cell **800***ba* into the inserted Knowledge Cell **800***ha*. The system can then per-

form Similarity Comparisons **125** of Knowledge Cell **800***bb* from Knowledge Structuring Unit **520** with Knowledge Cells **800** in Graph **530***b*. In the case that a substantially similar match is found between Knowledge Cell **800***bb* and Knowledge Cell **800***hb*, the system may create Connection **853***h***1** between Knowledge Cell **800***ha* and Knowledge Cell **800***hb* with occurrence count of 1 and weight of 1. The system can then perform Similarity Comparisons **125** of Knowledge Cell **800***bc* from Knowledge Structuring Unit **520** with Knowledge Cells **800** in Graph **530***b*. In the case that a substantially similar match is found between Knowledge Cell **800***bc* and Knowledge Cell **800***hc*, the system may update occurrence count and weight of Connection **853***h***2** between Knowledge Cell **800***hb* and Knowledge Cell **800***hc*, and update weights of other outgoing Connections **853** (one in this example) originating from Knowledge Cell **800***hb* as previously described. The system can then perform Similarity Comparisons **125** of Knowledge Cell **800***bd* from Knowledge Structuring Unit **520** with Knowledge Cells **800** in Graph **530***b*. In the case that a substantially similar match is not found, the system may insert Knowledge Cell **800***hd* into Graph **530***b* and copy Knowledge Cell **800***bd* into the inserted Knowledge Cell **800***hd*. The system may also create Connection **853***h***3** between Knowledge Cell **800***hc* and Knowledge Cell **800***hd* with occurrence count of 1 and weight calculated based on the occurrence count as previously described. The system may also update weights of other outgoing Connections **853** (one in this example) originating from Knowledge Cell **800***hc* as previously described. The system can then perform Similarity Comparisons **125** of Knowledge Cell **800***be* from Knowledge Structuring Unit **520** with Knowledge Cells **800** in Graph **530***b*. In the case that a substantially similar match is not found, the system may insert Knowledge Cell **800***he* into Graph **530***b* and copy Knowledge Cell **800***be* into the inserted Knowledge Cell **800***he*. The system may also create Connection **853***h***4** between Knowledge Cell **800***hd* and Knowledge Cell **800***he* with occurrence count of 1 and weight of 1. Applying any additional Knowledge Cells **800** from Knowledge Structuring Unit **520** onto Graph **530***b* follows similar logic or process as the above-described.

Referring to FIG. **23**, an embodiment of learning Knowledge Cells **800** comprising one or more Collections of Object Representations **525** correlated with any Instruction Sets **526** and/or Extra Info **527** using Collection of Sequences **530***c* is illustrated. Collection of Sequences **530***c* comprises the functionality for storing one or more Sequences **533**. Sequence **533** comprises the functionality for storing any number of Knowledge Cells **800**. For example, Knowledge Structuring Unit **520** structures or generates Knowledge Cells **800** and the system applies them onto Collection of Sequences **530***c*, thereby implementing learning Device's **98** operation in circumstances including objects with various properties. The system can perform collective Similarity Comparisons **125** of Knowledge Cells **800** from Knowledge Structuring Unit **520** with Knowledge Cells **800** in Sequences **533** of Collection of Sequences **530***c* to find a Sequence **533** comprising Knowledge Cells **800** that are collectively substantially similar to the Knowledge Cells **800** from Knowledge Structuring Unit **520**. If Sequence **533** comprising such collectively substantially similar Knowledge Cells **800** is not found in Collection of Sequences **530***c*, the system may create a new Sequence **533** comprising the Knowledge Cells **800** from Knowledge Structuring Unit **520** and insert (i.e. copy, store, etc.) the new Sequence **533** into Collection of Sequences **530***c*. On the other hand, if Sequence **533** comprising collectively substantially similar Knowledge Cells **800** is found in Collection of Sequences **530***c*, the system may optionally omit inserting the Knowledge Cells **800** from Knowledge Structuring Unit **520** into Collection of Sequences **530***c* as inserting a similar Sequence **533** may not add much or any additional knowledge. This approach can save storage resources and limit the number of Knowledge Cells **800** that may later need to be processed or compared. In some aspects, a Sequence **533** may include Knowledge Cells **800** relating to a single operation of Device **98**. In other aspects, a Sequence **533** may include Knowledge Cells **800** relating to a part of an operation of Device **98**. In further aspects, one or more long Sequences **533** each including Knowledge Cells **800** of multiple operations of Device **98** can be utilized. In one example, Knowledge Cells **800** of all operations can be stored in a single long Sequence **533** in which case Collection of Sequences **530***c* as a separate element can be omitted. In another example, Knowledge Cells **800** of multiple operations can be included in a plurality of long Sequences **533** such as hourly, daily, weekly, monthly, yearly, or other periodic or other Sequences **533**. Similarity Comparisons **125** can be performed by traversing the one or more long Sequences **533** to find a match or substantially similar match. For instance, the system can perform collective Similarity Comparisons **125** of Knowledge Cells **800** from Knowledge Structuring Unit **520** with Knowledge Cells **800** in subsequences of a long Sequence **533** in incremental or other traversing pattern to find a subsequence comprising Knowledge Cells **800** that are collectively substantially similar to the Knowledge Cells **800** from Knowledge Structuring Unit **520**. The incremental traversing pattern may start from one end of a long Sequence **533** and move the comparison subsequence up or down one or any number of incremental Knowledge Cells **800** at a time. Other traversing patterns or methods can be employed such as starting from the middle of the Sequence **533** and subdividing the resulting sub-sequences in a recursive pattern, or any other traversing pattern or method. If a subsequence comprising collectively substantially similar Knowledge Cells **800** is not found in the long Sequence **533**, the system may concatenate or append the Knowledge Cells **800** from Knowledge Structuring Unit **520** to the long Sequence **533**. In further aspects, Connections **853** can optionally be used in Sequence **533** to connect Knowledge Cells **800**. For example, a Knowledge Cell **800** can be connected not only with a next Knowledge Cell **800** in the Sequence **533**, but also with any other Knowledge Cell **800** in the Sequence **533**, thereby creating alternate routes or shortcuts through the Sequence **533**. Any number of Connections **853** connecting any Knowledge Cells **800** can be utilized. Any of the previously described and/or other techniques for comparing, inserting, updating, and/or other operations on Knowledge Cells **800**, Connections **853**, and/or other elements can similarly be utilized in Sequences **533** and/or Collection of Sequences **530***c*.

In some embodiments, various elements and/or techniques can be utilized in the aforementioned substantial similarity determinations with respect to collectively compared Knowledge Cells **800** and/or other elements. In some aspects, substantial similarity of collectively compared Knowledge Cells **800** can be determined based on similarities or similarity indexes of the individually compared Knowledge Cells **800**. In one example, an average of similarities or similarity indexes of individually compared Knowledge Cells **800** can be used to determine similarity of collectively compared Knowledge Cells **800**. In another example, a weighted average of similarities or similarity

indexes of individually compared Knowledge Cells **800** can be used to determine similarity of collectively compared Knowledge Cells **800**. For instance, to affect the weighting of collective similarity, a higher weight or importance (i.e. importance index, etc.) can be assigned to the similarities or similarity indexes of some Knowledge Cells **800** and lower for other Knowledge Cells **800**. Any higher or lower weight or importance assignment can be implemented. In other aspects, any of the previously described or other thresholds for substantial similarity of individually compared elements can similarly be utilized for collectively compared elements. In one example, substantial similarity of collectively compared Knowledge Cells **800** can be achieved when their collective similarity or similarity index exceeds a similarity threshold. In another example, substantial similarity of collectively compared Knowledge Cells **800** can be achieved when at least a threshold number or percentage of Knowledge Cells **800** from the collectively compared Knowledge Cells **800** match or substantially match. Similarly, substantial similarity of collectively compared Knowledge Cells **800** can be achieved when a number or percentage of matching or substantially matching Knowledge Cells **800** from the collectively compared Knowledge Cells **800** exceeds a threshold. Such thresholds can be defined by a user, by DCADO system administrator, or automatically by the system based on experience, testing, inquiry, analysis, synthesis, or other techniques, knowledge, or input. Similar elements and/or techniques as the aforementioned can be used for similarity determinations of other collectively compared elements such as Collections of Object Representations **525**, Object Representations **625**, Object Properties **630**, Instruction Sets **526**, Extra Info **527**, and/or others. Similarity determinations of collectively compared elements may include any features, functionalities, and embodiments of Similarity Comparison **125**, and vice versa.

Any of the previously described data structures or arrangements of Knowledge Cells **800** such as Neural Network **530***a*, Graph **530***b*, Collection of Sequences **530***c*, Sequence **533**, Collection of Knowledge Cells **530***d*, and/or others can be used alone, or in combination with each other or with other elements, in alternate embodiments. In one example, a path in Neural Network **530***a* or Graph **530***b* may include its own separate sequence of Knowledge Cells **800** that are not interconnected with Knowledge Cells **800** in other paths. In another example, a part of a path in Neural Network **530***a* or Graph **530***b* may include a sequence of Knowledge Cells **800** interconnected with Knowledge Cells **800** in other paths, whereas, another part of the path may include its own separate sequence of Knowledge Cells **800** that are not interconnected with Knowledge Cells **800** in other paths. Any other combinations or arrangements of Knowledge Cells **800** can be implemented.

Referring to FIG. **24**, an embodiment of determining anticipatory Instruction Sets **526** from a single Knowledge Cell **800** is illustrated. Knowledge Cell **800** may be part of a Knowledgebase **530** (i.e. Neural Network **530***a*, Graph **530***b*, Collection of Sequences **530***c*, Sequence **533**, Collection of Knowledge Cells **530***d*, etc.) such as Collection of Knowledge Cells **530***d*. Decision-making Unit **540** comprises the functionality for anticipating or determining a device's operation in circumstances including objects with various properties. Decision-making Unit **540** comprises the functionality for anticipating or determining Instruction Sets **526** to be used or executed in Device's **98** autonomous operation. In some aspects, Instruction Sets **526** anticipated or determined to be used or executed in Device's **98** autonomous operation may be referred to as anticipatory Instruction Sets **526**, alternate Instruction Sets **526**, and/or other suitable name or reference. Therefore, these terms can be used interchangeably herein depending on context. Decision-making Unit **540** also comprises other disclosed functionalities.

In some aspects, Decision-making Unit **540** may anticipate or determine Instruction Sets **526** (i.e. anticipatory Instruction Sets **526**, etc.) for autonomous Device **98** operation by performing Similarity Comparisons **125** of incoming Collections of Object Representations **525** or portions thereof from Object Processing Unit **93** with Collections of Object Representations **525** or portions thereof from Knowledge Cells **800** in Knowledgebase **530** (i.e. Neural Network **530***a*, Graph **530***b*, Collection of Sequences **530***c*, Sequence **533**, Collection of Knowledge Cells **530***d*, etc.). A Knowledge Cell **800** includes knowledge (i.e. one or more Collections of Object Representations **525** correlated with any Instruction Sets **526** and/or Extra Info **527**, etc.) of how Device **98** operated in a circumstance including objects with various properties as previously described. When one or more Collections of Object Representations **525** representing objects with similar properties are received in the future, Decision-making Unit **540** can anticipate the Instruction Sets **526** (i.e. anticipatory Instruction Sets **526**, etc.) previously learned in a similar circumstance, thereby enabling autonomous Device **98** operation. In some aspects, Decision-making Unit **540** can perform Similarity Comparisons **125** of incoming Collections of Object Representations **525** from Object Processing Unit **93** with Collections of Object Representations **525** from Knowledge Cells **800** in Knowledgebase **530** (i.e. Neural Network **530***a*, Graph **530***b*, Collection of Sequences **530***c*, Sequence **533**, Collection of Knowledge Cells **530***d*, etc.). If one or more substantially similar Collections of Object Representations **525** or portions thereof are found in a Knowledge Cell **800** from Knowledgebase **530**, Instruction Sets **526** (i.e. anticipatory Instruction Sets **526**, etc.) for autonomous Device **98** operation can be anticipated in Instruction Sets **526** correlated with the one or more Collections of Object Representations **525** from the Knowledge Cell **800**. In some designs, subsequent one or more Instruction Sets **526** for autonomous Device **98** operation can be anticipated in Instruction Sets **526** correlated with subsequent Collections of Object Representations **525** from the Knowledge Cell **800** or other Knowledge Cells **800**, thereby anticipating not only current, but also additional future Instruction Sets **526**. Although, Extra Info **527** is not shown in this and/or other figures for clarity of illustration, it should be noted that any Collection of Object Representations **525**, Instruction Set **526**, and/or other element may include or be associated with Extra Info **527** and that Decision-making Unit **540** can utilize Extra Info **527** for enhanced decision making.

For example, Decision-making Unit **540** can perform Similarity Comparison **125** of Collection of Object Representations **525/1** or portions thereof from Object Processing Unit **93** with Collection of Object Representations **525***a***1** or portions thereof from Knowledge Cell **800***oa*. Collection of Object Representations **525***a***1** or portions thereof from Knowledge Cell **800***oa* may be found substantially similar. Decision-making Unit **540** can anticipate Instruction Sets **526***a***1**-**526***a***3** correlated with Collection of Object Representations **525***a***1**, thereby enabling autonomous Device **98** operation. Decision-making Unit **540** can then perform Similarity Comparison **125** of Collection of Object Representations **525/2** or portions thereof from Object Processing Unit **93** with Collection of Object Representations **525***a***2** or portions thereof from Knowledge Cell **800***oa*. Collection of

Object Representations **525***a***2** or portions thereof from Knowledge Cell **800***oa* may be found substantially similar. Decision-making Unit **540** can anticipate Instruction Set **526***a***4** correlated with Collection of Object Representations **525***a***2**, thereby enabling autonomous Device **98** operation. Decision-making Unit **540** can then perform Similarity Comparison **125** of Collection of Object Representations **525/3** or portions thereof from Object Processing Unit **93** with Collection of Object Representations **525***a***3** or portions thereof from Knowledge Cell **800***oa*. Collection of Object Representations **525***a***3** or portions thereof from Knowledge Cell **800***oa* may be found substantially similar. Decision-making Unit **540** may not anticipate any Instruction Sets **526** since none are correlated with Collection of Object Representations **525***a***3**. Decision-making Unit **540** can then perform Similarity Comparison **125** of Collection of Object Representations **525/4** or portions thereof from Object Processing Unit **93** with Collection of Object Representations **525***a***4** or portions thereof from Knowledge Cell **800***oa*. Collection of Object Representations **525***a***4** or portions thereof from Knowledge Cell **800***oa* may not be found substantially similar. Decision-making Unit **540** can then perform Similarity Comparison **125** of Collection of Object Representations **525/5** or portions thereof from Object Processing Unit **93** with Collection of Object Representations **525***a***5** or portions thereof from Knowledge Cell **800***oa*. Collection of Object Representations **525***a***5** or portions thereof from Knowledge Cell **800***oa* may not be found substantially similar. Decision-making Unit **540** can implement similar logic or process for any additional Collections of Object Representations **525** from Object Processing Unit **93**, and so on.

It should be understood that any of the described elements and/or techniques in the foregoing example can be omitted, used in a different combination, or used in combination with other elements and/or techniques, in which case the selection of Knowledge Cells **800** or elements (i.e. Collections of Object Representations **525**, Instruction Sets **526**, etc.) thereof would be affected accordingly. In one example, Extra Info **527** can be included in the Similarity Comparisons **125** as previously described. In another example, as history of incoming Collections of Object Representations **525** becomes available, Decision-making Unit **540** can perform collective Similarity Comparisons **125** of the history of Collections of Object Representations **525** or portions thereof from Object Processing Unit **93** with subsequences of Collections of Object Representations **525** or portions thereof from Knowledge Cell **800**. In a further example, the described comparisons in a single Knowledge Cell **800** may be performed on any number of Knowledge Cells **800** sequentially or in parallel. Parallel processors such as a plurality of Processors **11** or cores thereof can be utilized for such parallel processing. In a further example, various arrangements of Collections of Object Representations **525** and/or other elements in a Knowledge Cell **800** can be utilized as previously described. One of ordinary skill in art will understand that the foregoing exemplary embodiment is described merely as an example of a variety of possible implementations, and that while all of its variations are too voluminous to describe, they are within the scope of this disclosure.

Referring to FIG. **25**, an embodiment of determining anticipatory Instruction Sets **526** by traversing a single Knowledge Cell **800** is illustrated. Knowledge Cell **800** may be part of a Knowledgebase **530** (i.e. Neural Network **530***a*, Graph **530***b*, Collection of Sequences **530***c*, Sequence **533**, Collection of Knowledge Cells **530***d*, etc.) such as Collection of Knowledge Cells **530***d*. For example, Decision-making Unit **540** can perform Similarity Comparison **125** of Collection of Object Representations **525/1** or portions thereof from Object Processing Unit **93** with Collection of Object Representations **525***a***1** or portions thereof from Knowledge Cell **800***oa*. Collection of Object Representations **525***a***1** or portions thereof from Knowledge Cell **800***oa* may not be found substantially similar. Decision-making Unit **540** can then perform Similarity Comparison **125** of Collection of Object Representations **525/1** or portions thereof from Object Processing Unit **93** with Collection of Object Representations **525***a***2** or portions thereof from Knowledge Cell **800***oa*. Collection of Object Representations **525***a***2** or portions thereof from Knowledge Cell **800***oa* may not be found substantially similar. Decision-making Unit **540** can then perform Similarity Comparison **125** of Collection of Object Representations **525/1** or portions thereof from Object Processing Unit **93** with Collection of Object Representations **525***a***3** or portions thereof from Knowledge Cell **800***oa*. Collection of Object Representations **525***a***3** or portions thereof from Knowledge Cell **800***oa* may be found substantially similar. Decision-making Unit **540** may not anticipate any Instruction Sets **526** since none are correlated with Collection of Object Representations **525***a***3**. Decision-making Unit **540** can then perform Similarity Comparison **125** of Collection of Object Representations **525/2** or portions thereof from Object Processing Unit **93** with Collection of Object Representations **525***a***4** or portions thereof from Knowledge Cell **800***oa*. Collection of Object Representations **525***a***4** or portions thereof from Knowledge Cell **800***oa* may be found substantially similar. Decision-making Unit **540** can anticipate Instruction Sets **526***a***5**-**526***a***6** correlated with Collection of Object Representations **525***a***4**, thereby enabling autonomous Device **98** operation. Decision-making Unit **540** can then perform Similarity Comparison **125** of Collection of Object Representations **525/3** or portions thereof from Object Processing Unit **93** with Collection of Object Representations **525***a***5** or portions thereof from Knowledge Cell **800***oa*. Collection of Object Representations **525***a***5** or portions thereof from Knowledge Cell **800***oa* may be found substantially similar. Decision-making Unit **540** may not anticipate any Instruction Sets **526** since none are correlated with Collection of Object Representations **525***a***5**. Decision-making Unit **540** can implement similar logic or process for any additional Collections of Object Representations **525** from Object Processing Unit **93**, and so on.

It should be understood that any of the described elements and/or techniques in the foregoing example can be omitted, used in a different combination, or used in combination with other elements and/or techniques, in which case the selection of Knowledge Cells **800** or elements (i.e. Collections of Object Representations **525**, Instruction Sets **526**, etc.) thereof would be affected accordingly. In one example, Extra Info **527** can be included in the Similarity Comparisons **125** as previously described. In another example, as history of incoming Collections of Object Representations **525** becomes available, Decision-making Unit **540** can perform collective Similarity Comparisons **125** of the history of Collections of Object Representations **525** or portions thereof from Object Processing Unit **93** with subsequences of Collections of Object Representations **525** or portions thereof from Knowledge Cell **800**. In a further example, traversing may be performed in incremental traversing pattern such as starting from one end of Knowledge Cell **800** and moving the comparison subsequence up or down the list one or any number of incremental Collections

of Object Representations **525** at a time. Other traversing patterns or methods can be employed such as starting from the middle of the Knowledge Cell **800** and subdividing the resulting subsequence in a recursive pattern, or any other traversing pattern or method. In a further example, the described traversing of a single Knowledge Cell **800** may be performed on any number of Knowledge Cells **800** sequentially or in parallel. Parallel processors such as a plurality of Processors **11** or cores thereof can be utilized for such parallel processing. In a further example, various arrangements of Collections of Object Representations **525** and/or other elements in a Knowledge Cell **800** can be utilized as previously described. One of ordinary skill in art will understand that the foregoing exemplary embodiment is described merely as an example of a variety of possible implementations, and that while all of its variations are too voluminous to describe, they are within the scope of this disclosure.

Referring to FIG. **26**, an embodiment of determining anticipatory Instruction Sets **526** using collective similarity comparisons is illustrated. For example, Decision-making Unit **540** can perform Similarity Comparisons **125** of Collection of Object Representations **525/1** or portions thereof from Object Processing Unit **93** with Collections of Object Representations **525** or portions thereof from Knowledge Cells **800** in Collection of Knowledge Cells **530***d*. Collection of Object Representations **525***c***1** or portions thereof from Knowledge Cell **800***rc* may be found substantially similar with highest similarity. Decision-making Unit **540** can anticipate any Instruction Sets **526** (not shown) correlated with Collection of Object Representations **525***c***1**, thereby enabling autonomous Device **98** operation. Decision-making Unit **540** can then perform collective Similarity Comparisons **125** of Collections of Object Representations **525/1-525/2** or portions thereof from Object Processing Unit **93** with Collections of Object Representations **525** or portions thereof from Knowledge Cells **800** in Collection of Knowledge Cells **530***d*. Collections of Object Representations **525***c***1-525***c***2** or portions thereof from Knowledge Cell **800***rc* may be found substantially similar with highest similarity. Decision-making Unit **540** can anticipate any Instruction Sets **526** (not shown) correlated with Collection of Object Representations **525***c***2**, thereby enabling autonomous Device **98** operation. Decision-making Unit **540** can then perform collective Similarity Comparisons **125** of Collections of Object Representations **525/1-525/3** or portions thereof from Object Processing Unit **93** with Collections of Object Representations **525** or portions thereof from Knowledge Cells **800** in Collection of Knowledge Cells **530***d*. Collections of Object Representations **525***d***1-525***d***3** or portions thereof from Knowledge Cell **800***rd* may be found substantially similar with highest similarity. Decision-making Unit **540** can anticipate any Instruction Sets **526** (not shown) correlated with Collection of Object Representations **525***d***3**, thereby enabling autonomous Device **98** operation. Decision-making Unit **540** can then perform collective Similarity Comparisons **125** of Collections of Object Representations **525/1-525/4** or portions thereof from Object Processing Unit **93** with Collections of Object Representations **525** or portions thereof from Knowledge Cells **800** in Collection of Knowledge Cells **530***d*. Collections of Object Representations **525***d***1-525***d***4** or portions thereof from Knowledge Cell **800***rd* may be found substantially similar with highest similarity. Decision-making Unit **540** can anticipate any Instruction Sets **526** (not shown) correlated with Collection of Object Representations **525***d***4**, thereby enabling autonomous Device **98** operation. Decision-making Unit **540** can then perform collective Similarity Comparisons **125** of Collections of Object Representations **525/1-525/5** or portions thereof from Object Processing Unit **93** with Collections of Object Representations **525** or portions thereof from Knowledge Cells **800** in Collection of Knowledge Cells **530***d*. Collections of Object Representations **525***d***1-525***d***5** or portions thereof from Knowledge Cell **800***rd* may be found substantially similar with highest similarity. Decision-making Unit **540** can anticipate any Instruction Sets **526** (not shown) correlated with Collection of Object Representations **525***d***5**, thereby enabling autonomous Device **98** operation. Decision-making Unit **540** can implement similar logic or process for any additional Collections of Object Representations **525** from Object Processing Unit **93**, and so on.

In some embodiments, various elements and/or techniques can be utilized in the aforementioned similarity determinations with respect to collectively compared Collections of Object Representations **525** and/or other elements. In some aspects, similarity of collectively compared Collections of Object Representations **525** can be determined based on similarities or similarity indexes of the individually compared Collections of Object Representations **525**. In one example, an average of similarities or similarity indexes of individually compared Collections of Object Representations **525** can be used to determine similarity of collectively compared Collections of Object Representations **525**. In another example, a weighted average of similarities or similarity indexes of individually compared Collections of Object Representations **525** can be used to determine similarity of collectively compared Collections of Object Representations **525**. For instance, to affect the weighting of collective similarity, a higher weight or importance (i.e. importance index, etc.) can be assigned to the similarities or similarity indexes of some (i.e. more substantive or larger, etc.) Collections of Object Representations **525** and lower for other (i.e. less substantive or smaller, etc.) Collections of Object Representations **525**. Any other higher or lower weight or importance assignment can be implemented. In other aspects, any of the previously described or other thresholds for substantial similarity of individually compared elements can be similarly utilized for collectively compared elements. In one example, substantial similarity of collectively compared Collections of Object Representations **525** can be achieved when their collective similarity or similarity index exceeds a similarity threshold. In another example, substantial similarity of collectively compared Collections of Object Representations **525** can be achieved when at least a threshold number or percentage of Collections of Object Representations **525** or portions thereof from the collectively compared Collections of Object Representations **525** match or substantially match. Similarly, substantial similarity of collectively compared Collections of Object Representations **525** can be achieved when a number or percentage of matching or substantially matching Collections of Object Representations **525** or portions thereof from the collectively compared Collections of Object Representations **525** exceeds a threshold. Such thresholds can be defined by a user, by DCADO system administrator, or automatically by the system based on experience, testing, inquiry, analysis, synthesis, or other techniques, knowledge, or input. Similar elements and/or techniques as the aforementioned can be used for similarity determinations of other collectively compared elements such as Object Representations **625**, Object Properties **630**, Instruction Sets **526**, Extra Info **527**, Knowledge Cells **800**, and/or others. Similarity determinations of collectively compared elements may

include any features, functionalities, and embodiments of Similarity Comparison **125**, and vice versa.

It should be understood that any of the described elements and/or techniques in the foregoing example can be omitted, used in a different combination, or used in combination with other elements and/or techniques, in which case the selection of Knowledge Cells **800** or elements (i.e. Collections of Object Representations **525**, Instruction Sets **526**, etc.) thereof would be affected accordingly. Any of the elements and/or techniques utilized in other examples or embodiments described herein such as using Extra Info **527** in Similarity Comparisons **125**, traversing of Knowledge Cells **800** or other elements, using history of Collections of Object Representations **525** or Knowledge Cells **800** for collective Similarity Comparisons **125**, using various arrangements of Collections of Object Representations **525** and/or other elements in a Knowledge Cell **800**, and/or others can similarly be utilized in this example. One of ordinary skill in art will understand that the foregoing exemplary embodiment is described merely as an example of a variety of possible implementations, and that while all of its variations are too voluminous to describe, they are within the scope of this disclosure.

Referring to FIG. **27**, an embodiment of determining anticipatory Instruction Sets **526** using Neural Network **530***a* is illustrated. In some aspects, determining anticipatory Instruction Sets **526** using Neural Network **530***a* may include selecting a path of Knowledge Cells **800** or elements (i.e. Collections of Object Representations **525**, Instruction Sets **526**, etc.) thereof through Neural Network **530***a*. Decision-making Unit **540** can utilize various elements and/or techniques for selecting a path through Neural Network **530***a*. Although, these elements and/or techniques are described with respect to Neural Network **530***a* below, they can similarly be used in any Knowledgebase **530** (i.e. Graph **530***b*, Collection of Sequences **530***c*, Sequence **533**, Collection of Knowledge Cells **530***d*, etc.) as applicable.

In some embodiments, Decision-making Unit **540** can utilize similarity index in selecting Knowledge Cells **800** or portions (i.e. Collections of Object Representations **525**, Instruction Sets **526**, etc.) thereof in a path through Neural Network **530***a*. For instance, similarity index may indicate how well one Knowledge Cell **800** or portions thereof are matched with another Knowledge Cell **800** or portions thereof as previously described. In one example, Decision-making Unit **540** may select a Knowledge Cell **800** comprising one or more Collections of Object Representations **525** with highest similarity index even if Connection **853** pointing to that Knowledge Cell **800** has less than the highest weight. Therefore, similarity index or other such element or parameter can override or disregard the weight of a Connection **853** or other element. In another example, Decision-making Unit **540** may select a Knowledge Cell **800** comprising one or more Collections of Object Representations **525** whose similarity index is higher than or equal to a weight of Connection **853** pointing to that Knowledge Cell **800**. In a further example, Decision-making Unit **540** may select a Knowledge Cell **800** comprising one or more Collections of Object Representations **525** whose similarity index is lower than or equal to a weight of Connection **853** pointing to that Knowledge Cell **800**. Similarity index can be set to be more, less, or equally important than a weight of a Connection **853**.

In some embodiments, Decision-making Unit **540** can utilize Connections **853** in selecting Knowledge Cells **800** or portions (i.e. Collections of Object Representations **525**, Instruction Sets **526**, etc.) thereof in a path through Neural Network **530***a*. In some aspects, Decision-making Unit **540** can take into account weights of Connections **853** among the interconnected Knowledge Cells **800** in choosing from which Knowledge Cell **800** to compare one or more Collections of Object Representations **525** first, second, third, and so on. Specifically, for instance, Decision-making Unit **540** can perform Similarity Comparisons **125** with one or more Collections of Object Representations **525** from Knowledge Cell **800** pointed to by the highest weight Connection **853** first, Collections of Object Representations **525** from Knowledge Cell **800** pointed to by the second highest weight Connection **853** second, and so on. In other aspects, Decision-making Unit **540** can stop performing Similarity Comparisons **125** as soon as it finds one or more substantially similar Collections of Object Representations **525** in an interconnected Knowledge Cell **800**. In further aspects, Decision-making Unit **540** may only follow the highest weight Connection **853** to arrive at a Knowledge Cell **800** comprising one or more Collections of Object Representations **525** to be compared, thereby disregarding Connections **853** with less than the highest weight. In further aspects, Decision-making Unit **540** may ignore weights and/or other parameters of Connections **853**. In further aspects, Decision-making Unit **540** may ignore Connections **853**.

In some embodiments, Decision-making Unit **540** can utilize a bias to adjust similarity index, weight of a Connection **853**, and/or other element or parameter used in selecting Knowledge Cells **800** or portions (i.e. Collections of Object Representations **525**, Instruction Sets **526**, etc.) thereof in a path through Neural Network **530***a*. In one example, Decision-making Unit **540** may select a Knowledge Cell **800** comprising one or more Collections of Object Representations **525** whose similarity index multiplied by or adjusted for a bias is higher than or equal to a weight of Connection **853** pointing to that Knowledge Cell **800**. In another example, Decision-making Unit **540** may select a Knowledge Cell **800** comprising one or more Collections of Object Representations **525** whose similarity index multiplied by or adjusted for a bias is lower than or equal to a weight of Connection **853** pointing to that Knowledge Cell **800**. In a further example, bias can be used to resolve deadlock situations where similarity index is equal to a weight of a Connection **853**. In some aspects, bias can be expressed in percentages such as 0.3 percent, 1.2 percent, 25.7 percent, 79.8 percent, 99.9 percent, 100.1 percent, 155.4 percent, 298.6 percent, 1105.5 percent, and so on. For example, a bias below 100 percent decreases an element or parameter to which it is applied, a bias equal to 100 percent does not change the element or parameter to which it is applied, and a bias higher than 100 percent increases the element or parameter to which it is applied. In general, any amount of bias can be utilized depending on implementation. Bias can be applied to one or more of a weight of a Connection **853**, similarity index, any other element or parameter, and/or all or any combination of them. Also, different biases can be applied to each of a weight of a Connection **853**, similarity index, or any other element or parameter. For example, 30 percent bias can be applied to similarity index and 15 percent bias can be applied to a weight of a Connection **853**. Also, different biases can be applied to various Layers **854** of Neural Network **530***a*, and/or other disclosed elements. Bias can be defined by a user, by DCADO system administrator, or automatically by the system based on experience, testing, inquiry, analysis, synthesis, or other techniques, knowledge, or input.

Any other element and/or technique can be utilized in selecting Knowledge Cells **800** or portions (i.e. Collections of Object Representations **525**, Instruction Sets **526**, etc.) thereof in a path through Neural Network **530***a*.

In some embodiments, Neural Network **530***a* may include knowledge (i.e. interconnected Knowledge Cells **800** comprising one or more Collections of Object Representations **525** correlated with any Instruction Sets **526** and/or Extra Info **527**, etc.) of how Device **98** operated in circumstances including objects with various properties. In some aspects, determining anticipatory Instruction Sets **526** using Neural Network **530***a* may include selecting a path of Knowledge Cells **800** or portions (i.e. Collections of Object Representations **525**, Instruction Sets **526**, etc.) thereof through Neural Network **530***a*. Individual and/or collective Similarity Comparisons **125** can be used to determine substantial similarity of the individually and/or collectively compared Collections of Object Representations **525** or portions thereof. Substantial similarity may be used primarily for selecting a path through Neural Network **530***a*, whereas, weight of any Connection **853** may be used secondarily or not at all.

For example, Decision-making Unit **540** can perform Similarity Comparisons **125** of Collections of Object Representations **525***a***1**-**525***an* or portions thereof from Object Processing Unit **93** with Collections of Object Representations **525** or portions thereof from one or more Knowledge Cells **800** in Layer **854***a* (or any other one or more Layers **854**, etc.). Collections of Object Representations **525** or portions thereof from Knowledge Cell **800***ta* may be found collectively substantially similar with highest similarity. As the comparisons of individual Collections of Object Representations **525** are performed to determine collective similarity, Decision-making Unit **540** can anticipate Instruction Sets **526** correlated with substantially similar individual Collections of Object Representations **525** as previously described, thereby enabling autonomous Device **98** operation. Decision-making Unit **540** can then perform Similarity Comparisons **125** of Collections of Object Representations **525***b***1**-**525***bn* or portions thereof from Object Processing Unit **93** with Collections of Object Representations **525** or portions thereof from one or more Knowledge Cells **800** in Layer **854***b* interconnected with Knowledge Cell **800***ta*. Collections of Object Representations **525** or portions thereof from Knowledge Cell **800***tb* may be found collectively substantially similar with highest similarity, thus, Decision-making Unit **540** may follow Connection **853***t***1** disregarding its less than highest weight. As the comparisons of individual Collections of Object Representations **525** are performed to determine collective similarity, Decision-making Unit **540** can anticipate Instruction Sets **526** correlated with substantially similar individual Collections of Object Representations **525** as previously described, thereby enabling autonomous Device **98** operation. Since Connection **853***t***2** is the only connection from Knowledge Cell **800***tb*, Decision-making Unit **540** may follow Connection **853***t***2** and perform Similarity Comparisons **125** of Collections of Object Representations **525***c***1**-**525***cn* or portions thereof from Object Processing Unit **93** with Collections of Object Representations **525** or portions thereof from Knowledge Cell **800***tc* in Layer **854***c*. Collections of Object Representations **525** or portions thereof from Knowledge Cell **800***tc* may be found collectively substantially similar. As the comparisons of individual Collections of Object Representations **525** are performed to determine collective similarity, Decision-making Unit **540** can anticipate Instruction Sets **526** correlated with substantially similar individual Collections of Object Representations **525** as previously described, thereby enabling autonomous Device **98** operation. Decision-making Unit **540** can then perform Similarity Comparisons **125** of Collections of Object Representations **525***d***1**-**525***dn* or portions thereof from Object Processing Unit **93** with Collections of Object Representations **525** or portions thereof from one or more Knowledge Cells **800** in Layer **854***d* interconnected with Knowledge Cell **800***tc*. Collections of Object Representations **525** or portions thereof from Knowledge Cell **800***td* may be found collectively substantially similar with highest similarity, thus, Decision-making Unit **540** may follow Connection **853***t***3**. As the comparisons of individual Collections of Object Representations **525** are performed to determine collective similarity, Decision-making Unit **540** can anticipate Instruction Sets **526** correlated with substantially similar individual Collections of Object Representations **525** as previously described, thereby enabling autonomous Device **98** operation. Decision-making Unit **540** can then perform Similarity Comparisons **125** of Collections of Object Representations **525***e***1**-**525***en* or portions thereof from Object Processing Unit **93** with Collections of Object Representations **525** or portions thereof from one or more Knowledge Cells **800** in Layer **854***e* interconnected with Knowledge Cell **800***td*. Collections of Object Representations **525** or portions thereof from Knowledge Cell **800***te* may be found collectively substantially similar with highest similarity, thus, Decision-making Unit **540** may follow Connection **853***t***4**. As the comparisons of individual Collections of Object Representations **525** are performed to determine collective similarity, Decision-making Unit **540** can anticipate Instruction Sets **526** correlated with substantially similar individual Collections of Object Representations **525** as previously described, thereby enabling autonomous Device **98** operation. Decision-making Unit **540** can implement similar logic or process for any additional Collections of Object Representations **525** from Object Processing Unit **93**, and so on.

The foregoing exemplary embodiment provides an example of utilizing a combination of collective Similarity Comparisons **125**, individual Similarity Comparisons **125**, Connections **853**, and/or other elements or techniques. It should be understood that any of these elements and/or techniques can be omitted, used in a different combination, or used in combination with other elements and/or techniques, in which case the selection of Knowledge Cells **800** or portions (i.e. Collections of Object Representations **525**, Instruction Sets **526**, etc.) thereof in a path through Neural Network **530***a* would be affected accordingly. Any of the elements and/or techniques utilized in other examples or embodiments described herein such as using Extra Info **527** in Similarity Comparisons **125**, traversing of Knowledge Cells **800** or other elements, using history of Collections of Object Representations **525** or Knowledge Cells **800** for collective Similarity Comparisons **125**, using various arrangements of Collections of Object Representations **525** and/or other elements in a Knowledge Cell **800**, and/or others can similarly be utilized in this example. These elements and/or techniques can similarly be utilized in Graph **530***b*, Collection of Sequences **530***c*, Sequence **533**, Collection of Knowledge Cells **530***d*, and/or other data structures or arrangements. In some aspects, instead of anticipating Instruction Sets **526** correlated with substantially similar individual Collections of Object Representations **525**, Decision-making Unit **540** can anticipate instruction Sets **526** correlated with substantially similar streams of Collections of Object Representations **525**. In other aspects, any time that substantial similarity or other similarity thresh-

old is not achieved in compared Collections of Object Representations **525** or portions thereof from any of the Knowledge Cells **800**, Decision-making Unit **540** can decide to look for a substantially or otherwise similar Collections of Object Representations **525** or portions thereof in Knowledge Cells **800** elsewhere in Neural Network **530***a* such as in any Layer **854** subsequent to a current Layer **854**, in the first Layer **854**, in the entire Neural Network **530***a*, and/or others, even if such Knowledge Cell **800** may be unconnected with a prior Knowledge Cell **800**. It should be noted that any of Collections of Object Representations **525***a***1**-**525***an*, Collections of Object Representations **525***b***1**-**525***bn*, Collections of Object Representations **525***c***1**-**525***cn*, Collections of Object Representations **525***d***1**-**525***dn*, Collections of Object Representations **525***e***1**-**525***en*, etc. may include one Collection of Object Representations **525** or a stream of Collections of Object Representations **525**. It should also be noted that any Knowledge Cell **800** may include one Collection of Object Representations **525** or a stream of Collections of Object Representations **525** as previously described. One of ordinary skill in art will understand that the foregoing exemplary embodiment is described merely as an example of a variety of possible implementations, and that while all of its variations are too voluminous to describe, they are within the scope of this disclosure.

Referring to FIG. **28**, an embodiment of determining anticipatory Instruction Sets **526** using Graph **530***b* is illustrated. Graph **530***b* may include knowledge (i.e. interconnected Knowledge Cells **800** comprising one or more Collections of Object Representations **525** correlated with any Instruction Sets **526** and/or Extra Info **527**, etc.) of how Device **98** operated in circumstances including objects with various properties. In some aspects, determining anticipatory Instruction Sets **526** using Graph **530***b* may include selecting a path of Knowledge Cells **800** or portions (i.e. Collections of Object Representations **525**, Instruction Sets **526**, etc.) thereof through Graph **530***b*. Individual and/or collective Similarity Comparisons **125** can be used to determine substantial similarity of the individually and/or collectively compared Collections of Object Representations **525** or portions thereof. Substantial similarity may be used primarily for selecting a path through Graph **530***b*, whereas, weight of any Connection **853** may be used secondarily or not at all.

For example, Decision-making Unit **540** can perform Similarity Comparisons **125** of Collections of Object Representations **525***a***1**-**525***an* or portions thereof from Object Processing Unit **93** with Collections of Object Representations **525** or portions thereof from one or more Knowledge Cells **800** in Graph **530***b*. Collections of Object Representations **525** or portions thereof from Knowledge Cell **800***ua* may be found collectively substantially similar with highest similarity. As the comparisons of individual Collections of Object Representations **525** are performed to determine collective similarity, Decision-making Unit **540** can anticipate Instruction Sets **526** correlated with substantially similar individual Collections of Object Representations **525** as previously described, thereby enabling autonomous Device **98** operation. Decision-making Unit **540** can then perform Similarity Comparisons **125** of Collections of Object Representations **525***b***1**-**525***bn* or portions thereof from Object Processing Unit **93** with Collections of Object Representations **525** or portions thereof from one or more Knowledge Cells **800** in Graph **530***b* interconnected with Knowledge Cell **800***ua* by outgoing Connections **853**. Collections of Object Representations **525** or portions thereof from Knowledge Cell **800***ub* may be found collectively substantially similar with highest similarity, thus, Decision-making Unit **540** may follow Connection **853***u***1** disregarding its less than highest weight. As the comparisons of individual Collections of Object Representations **525** are performed to determine collective similarity, Decision-making Unit **540** can anticipate Instruction Sets **526** correlated with substantially similar individual Collections of Object Representations **525** as previously described, thereby enabling autonomous Device **98** operation. Decision-making Unit **540** can then perform Similarity Comparisons **125** of Collections of Object Representations **525***c***1**-**525***cn* or portions thereof from Object Processing Unit **93** with Collections of Object Representations **525** or portions thereof from one or more Knowledge Cells **800** in Graph **530***b* interconnected with Knowledge Cell **800***ub* by outgoing Connections **853**. Collections of Object Representations **525** or portions thereof from Knowledge Cell **800***uc* may be found collectively substantially similar with highest similarity, thus, Decision-making Unit **540** may follow Connection **853***u***2** disregarding its less than highest weight. As the comparisons of individual Collections of Object Representations **525** are performed to determine collective similarity, Decision-making Unit **540** can anticipate Instruction Sets **526** correlated with substantially similar individual Collections of Object Representations **525** as previously described, thereby enabling autonomous Device **98** operation. Since Connection **853***u***3** is the only connection from Knowledge Cell **800***uc*, Decision-making Unit **540** may follow Connection **853***u***3** and perform Similarity Comparisons **125** of Collections of Object Representations **525***d***1**-**525***dn* or portions thereof from Object Processing Unit **93** with Collections of Object Representations **525** or portions thereof from Knowledge Cell **800***ud* in Graph **530***b*. Collections of Object Representations **525** or portions thereof from Knowledge Cell **800***ud* may be found collectively substantially similar. As the comparisons of individual Collections of Object Representations **525** are performed to determine collective similarity, Decision-making Unit **540** can anticipate Instruction Sets **526** correlated with substantially similar individual Collections of Object Representations **525** as previously described, thereby enabling autonomous Device **98** operation. Decision-making Unit **540** can then perform Similarity Comparisons **125** of Collections of Object Representations **525***e***1**-**525***en* or portions thereof from Object Processing Unit **93** with Collections of Object Representations **525** or portions thereof from one or more Knowledge Cells **800** in Graph **530***b* interconnected with Knowledge Cell **800***ud* by outgoing Connections **853**. Collections of Object Representations **525** or portions thereof from Knowledge Cell **800***ue* may be found collectively substantially similar with highest similarity, thus, Decision-making Unit **540** may follow Connection **853***u***4**. As the comparisons of individual Collections of Object Representations **525** are performed to determine collective similarity, Decision-making Unit **540** can anticipate Instruction Sets **526** correlated with substantially similar individual Collections of Object Representations **525** as previously described, thereby enabling autonomous Device **98** operation. Decision-making Unit **540** can implement similar logic or process for any additional Collections of Object Representations **525** from Object Processing Unit **93**, and so on.

The foregoing exemplary embodiment provides an example of utilizing a combination of collective Similarity Comparisons **125**, individual Similarity Comparisons **125**, Connections **853**, and/or other elements or techniques. It should be understood that any of these elements and/or techniques can be omitted, used in a different combination,

or used in combination with other elements and/or techniques, in which case the selection of Knowledge Cells **800** or portions (i.e. Collections of Object Representations **525**, Instruction Sets **526**, etc.) thereof in a path through Graph **530***b* would be affected accordingly. Any of the elements and/or techniques utilized in other examples or embodiments described herein such as using Extra Info **527** in Similarity Comparisons **125**, traversing of Knowledge Cells **800** or other elements, using history of Collections of Object Representations **525** or Knowledge Cells **800** in collective Similarity Comparisons **125**, using various arrangements of Collections of Object Representations **525** and/or other elements in a Knowledge Cell **800**, and/or others can similarly be utilized in this example. These elements and/or techniques can similarly be utilized in Neural Network **530***a*, Collection of Sequences **530***c*, Sequence **533**, Collection of Knowledge Cells **530***d*, and/or other data structures or arrangements. In some aspects, instead of anticipating Instruction Sets **526** correlated with substantially similar individual Collections of Object Representations **525**, Decision-making Unit **540** can anticipate Instruction Sets **526** correlated with substantially matching streams of Collections of Object Representations **525**. In other aspects, any time that substantial similarity or other similarity threshold is not achieved in compared Collections of Object Representations **525** or portions thereof of any of the Knowledge Cells **800**, Decision-making Unit **540** can decide to look for a substantially or otherwise similar Collections of Object Representations **525** or portions thereof in Knowledge Cells **800** elsewhere in Graph **530***b* even if such Knowledge Cell **800** may be unconnected with a prior Knowledge Cell **800**. It should be noted that any of Collections of Object Representations **525***a***1**-**525***an*, Collections of Object Representations **525***b***1**-**525***bn*, Collections of Object Representations **525***c***1**-**525***cn*, Collections of Object Representations **525***d***1**-**525***dn*, Collections of Object Representations **525***e***1**-**525***en*, etc. may include one Collection of Object Representations **525** or a stream of Collections of Object Representations **525**. It should also be noted that any Knowledge Cell **800** may include one Collection of Object Representations **525** or a stream of Collections of Object Representations **525** as previously described. One of ordinary skill in art will understand that the foregoing exemplary embodiment is described merely as an example of a variety of possible implementations, and that while all of its variations are too voluminous to describe, they are within the scope of this disclosure.

Referring to FIG. **29**, an embodiment of determining anticipatory Instruction Sets **526** using Collection of Sequences **530***c* is illustrated. Collection of Sequences **530***c* may include knowledge (i.e. sequences of Knowledge Cells **800** comprising one or more Collections of Object Representations **525** correlated with any Instruction Sets **526** and/or Extra Info **527**, etc.) of how Device **98** operated in circumstances including objects with various properties. In some aspects, determining anticipatory Instruction Sets **526** for autonomous Device **98** operation using Collection of Sequences **530***c* may include selecting a Sequence **533** of Knowledge Cells **800** or portions (i.e. Collections of Object Representations **525**, Instruction Sets **526**, etc.) thereof from Collection of Sequences **530***c*. Individual and/or collective Similarity Comparisons **125** can be used to determine substantial similarity of the individually and/or collectively compared Collections of Object Representations **525** or portions thereof.

For example, Decision-making Unit **540** can perform Similarity Comparisons **125** of Collections of Object Representations **525***a***1**-**525***an* or portions thereof from Object Processing Unit **93** with Collections of Object Representations **525** or portions thereof from Knowledge Cells **800** in one or more Sequences **533** of Collection of Sequences **530***c*. Collections of Object Representations **525** or portions thereof from Knowledge Cell **800***ca* in Sequence **533***wc* may be found collectively substantially similar with highest similarity. As the comparisons of individual Collections of Object Representations **525** are performed to determine collective similarity, Decision-making Unit **540** can anticipate Instruction Sets **526** correlated with substantially similar individual Collections of Object Representations **525** as previously described, thereby enabling autonomous Device **98** operation. Decision-making Unit **540** can then perform Similarity Comparisons **125** of Collections of Object Representations **525***a***1**-**525***an* and **525***b***1**-**525***bn* or portions thereof from Object Processing Unit **93** with Collections of Object Representations **525** or portions thereof from Knowledge Cells **800** in Sequences **533** of Collection of Sequences **530***c*. Collections of Object Representations **525** or portions thereof from Knowledge Cells **800***ca*-**800***cb* in Sequence **533***wc* may be found collectively substantially similar with highest similarity. As the comparisons of individual Collections of Object Representations **525** are performed to determine collective similarity, Decision-making Unit **540** can anticipate Instruction Sets **526** correlated with substantially similar individual Collections of Object Representations **525** as previously described, thereby enabling autonomous Device **98** operation. Decision-making Unit **540** can then perform Similarity Comparisons **125** of Collections of Object Representations **525***a***1**-**525***an*, **525***b***1**-**525***bn*, and **525***c***1**-**525***cn* or portions thereof from Object Processing Unit **93** with Collections of Object Representations **525** or portions thereof from Knowledge Cells **800** in Sequences **533** of Collection of Sequences **530***c*. Collections of Object Representations **525** or portions thereof from Knowledge Cells **800***da*-**800***dc* in Sequence **533***wd* may be found collectively substantially similar with highest similarity. As the comparisons of individual Collections of Object Representations **525** are performed to determine collective similarity, Decision-making Unit **540** can anticipate Instruction Sets **526** correlated with substantially similar individual Collections of Object Representations **525** as previously described, thereby enabling autonomous Device **98** operation. Decision-making Unit **540** can then perform Similarity Comparisons **125** of Collections of Object Representations **525***a***1**-**525***an*, **525***b***1**-**525***bn*, **525***c***1**-**525***cn*, and **525***d***1**-**525***dn* or portions thereof from Object Processing Unit **93** with Collections of Object Representations **525** or portions thereof from Knowledge Cells **800** in Sequences **533** of Collection of Sequences **530***c*. Collections of Object Representations **525** or portions thereof from Knowledge Cells **800***da*-**800***dd* in Sequence **533***wd* may be found collectively substantially similar with highest similarity. As the comparisons of individual Collections of Object Representations **525** are performed to determine collective similarity, Decision-making Unit **540** can anticipate Instruction Sets **526** correlated with substantially similar individual Collections of Object Representations **525** as previously described, thereby enabling autonomous Device **98** operation. Decision-making Unit **540** can then perform Similarity Comparisons **125** of Collections of Object Representations **525***a***1**-**525***an*, **525***b***1**-**525***bn*, **525***c***1**-**525***cn*, **525***d***1**-**525***dn*, and **525***e***1**-**525***en* or portions thereof from Object Processing Unit **93** with Collections of Object Representations **525** or portions thereof from Knowledge Cells **800** in Sequences **533** of Collection of Sequences **530***c*. Collections of Object Representations

525 or portions thereof from Knowledge Cells 800*da*-800*de* in Sequence 533*wd* may be found collectively substantially similar with highest similarity. As the comparisons of individual Collections of Object Representations 525 are performed to determine collective similarity, Decision-making Unit 540 can anticipate Instruction Sets 526 correlated with substantially similar individual Collections of Object Representations 525 as previously described, thereby enabling autonomous Device 98 operation. Decision-making Unit 540 can implement similar logic or process for any additional Collections of Object Representations 525 from Object Processing Unit 93, and so on.

The foregoing exemplary embodiment provides an example of utilizing a combination of collective Similarity Comparisons 125, individual Similarity Comparisons 125, and/or other elements or techniques. It should be understood that any of these elements and/or techniques can be omitted, used in a different combination, or used in combination with other elements and/or techniques, in which case the selection of Sequence 533 of Knowledge Cells 800 or portions (i.e. Collections of Object Representations 525, Instruction Sets 526, etc.) thereof would be affected accordingly. Any of the elements and/or techniques utilized in other examples or embodiments described herein such as using Extra Info 527 in Similarity Comparisons 125, traversing of Knowledge Cells 800 or other elements, using history of Collections of Object Representations 525 or Knowledge Cells 800 in collective Similarity Comparisons 125, using various arrangements of Collections of Object Representations 525 and/or other elements in a Knowledge Cell 800, and/or others can similarly be utilized in this example. These elements and/or techniques can similarly be utilized in Neural Network 530*a*, Graph 530*b*, Collection of Knowledge Cells 530*d*, and/or other data structures or arrangements. In some aspects, instead of anticipating Instruction Sets 526 correlated with substantially similar individual Collections of Object Representations 525, Decision-making Unit 540 can anticipate Instruction Sets 526 correlated with substantially matching streams of Collections of Object Representations 525. In other aspects, any time that substantial similarity or other similarity threshold is not achieved in compared Collections of Object Representations 525 or portions thereof from any of the Knowledge Cells 800, Decision-making Unit 540 can decide to look for a substantially or otherwise similar Collections of Object Representations 525 or portions thereof in Knowledge Cells 800 elsewhere in Collection of Sequences 530*c* such as in different Sequences 533. It should be noted that any of Collections of Object Representations 525*a*1-525*an*, Collections of Object Representations 525*b*1-525*bn*, Collections of Object Representations 525*c*1-525*cn*, Collections of Object Representations 525*d*1-525*dn*, Collections of Object Representations 525*e*1-525*en*, etc. may include one Collection of Object Representations 525 or a stream of Collections of Object Representations 525. It should also be noted that any Knowledge Cell 800 may include one Collection of Object Representations 525 or a stream of Collections of Object Representations 525 as previously described. One of ordinary skill in art will understand that the foregoing exemplary embodiment is described merely as an example of a variety of possible implementations, and that while all of its variations are too voluminous to describe, they are within the scope of this disclosure.

Referring now to Modification Interface 130. Modification Interface 130 comprises the functionality for modifying execution and/or functionality of Application Program 18, Processor 11, Logic Circuit 250, and/or other processing element. Modification Interface 130 comprises the functionality for modifying execution and/or functionality of Application Program 18, Processor 11, Logic Circuit 250, and/or other processing element at runtime. Modification Interface 130 comprises the functionality for modifying execution and/or functionality of Application Program 18, Processor 11, Logic Circuit 250, and/or other processing element based on anticipatory Instruction Sets 526. In one example, Modification Interface 130 comprises the functionality to access, modify, and/or perform other manipulations on runtime engine/environment, virtual machine, operating system, compiler, just-in-time (JIT) compiler, interpreter, translator, execution stack, file, object, data structure, and/or other computing system elements. In another example, Modification Interface 130 comprises the functionality to access, modify, and/or perform other manipulations on memory, storage, bus, interfaces, and/or other computing system elements. In a further example, Modification Interface 130 comprises the functionality to access, modify, and/or perform other manipulations on Processor 11 registers and/or other Processor 11 elements. In a further example, Modification Interface 130 comprises the functionality to access, modify, and/or perform other manipulations on inputs and/or outputs of Application Program 18, Processor 11, Logic Circuit 250, and/or other processing element. In a further example, Modification Interface 130 comprises the functionality to access, create, delete, modify, and/or perform other manipulations on functions, methods, procedures, routines, subroutines, and/or other elements of Application Program 18. In a further example, Modification Interface 130 comprises the functionality to access, create, delete, modify, and/or perform other manipulations on source code, bytecode, compiled, interpreted, or otherwise translated code, machine code, and/or other code. In a further example, Modification Interface 130 comprises the functionality to access, create, delete, modify, and/or perform other manipulations on values, variables, parameters, and/or other data or information. Modification Interface 130 comprises any features, functionalities, and embodiments of Acquisition Interface 120, and vice versa. Modification Interface 130 also comprises other disclosed functionalities.

Modification Interface 130 can employ various techniques for modifying execution and/or functionality of Application Program 18, Processor 11, Logic Circuit 250, and/or other processing element. In some aspects, some of the previously described techniques and/or tools can be utilized. Code instrumentation, for instance, may involve inserting additional code, overwriting or rewriting existing code, and/or branching to a separate segment of code in Application Program 18 as previously described. For example, instrumented code may include the following:

```
Device1.moveLeft(23);
modifyApplication( );
```

In the above sample code, instrumented call to Modification Interface's 130 function (i.e. modifyApplication( ), etc.) can be placed after a function (i.e. Device1.moveLeft(23), etc.) of Application Program 18. Similar call to an application modifying function can be placed after or before some or all functions/routines/subroutines, some or all lines of code, some or all statements, some or all instructions or instruction sets, some or all basic blocks, and/or some or all other code segments of Application Program 18. One or more application modifying function calls can be placed anywhere in Application Program's 18 code and can be executed at any points in Application Program's 18 execution. The application modifying function (i.e. modifyApplication( ), etc.) may include Artificial Intelligence Unit 110-determined anticipa-

tory Instruction Sets **526** that can modify execution and/or functionality of Application Program **18**. In some embodiments, the previously described obtaining Application Program's **18** instruction sets, data, and/or other information as well as modifying execution and/or functionality of Application Program **18** can be implemented in a single function that performs both tasks (i.e. traceAndModifyApplication( ), etc.).

In some embodiments, various computing systems and/or platforms may provide native tools for modifying execution and/or functionality of Application Program **18**, Processor **11**, Logic Circuit **250**, and/or other processing element. Independent vendors may provide tools with similar functionalities that can be utilized across different platforms. These tools enable a wide range of techniques or capabilities such as instrumentation, self-modifying code capabilities, dynamic code capabilities, branching, code rewriting, code overwriting, hot swapping, accessing and/or modifying objects or data structures, accessing and/or modifying functions/routines/subroutines, accessing and/or modifying variable or parameter values, accessing and/or modifying processor registers, accessing and/or modifying inputs and/or outputs, providing runtime memory access, and/or other capabilities. One of ordinary skill in art will understand that, while all possible variations of the techniques for modifying execution and/or functionality of Application Program **18**, Processor **11**, Logic Circuit **250**, and/or other processing element are too voluminous to describe, these techniques are within the scope of this disclosure.

In one example, modifying execution and/or functionality of Application Program **18** can be implemented through utilizing metaprogramming techniques, which include applications that can self-modify or that can create, modify, and/or manipulate other applications. Self-modifying code, dynamic code, reflection, and/or other techniques can be used to facilitate metaprogramming. In some aspects, metaprogramming is facilitated through a programming language's ability to access and manipulate the internals of the runtime engine directly or via an API. In other aspects, metaprogramming is facilitated through dynamic execution of expressions (i.e. anticipatory Instruction Sets **526**, etc.) that can be created and/or executed at runtime. In yet other aspects, metaprogramming is facilitated through application modification tools, which can perform modifications on an application regardless of whether the application's programming language enables metaprogramming capabilities. Some operating systems may protect an application loaded into memory by restricting access to the loaded application. This protection mechanism can be circumvented by utilizing operating system's, processor's, and/or other low level features or commands to unprotect the loaded application. For example, a self-modifying application may modify the in-memory image of itself. To do so, the application can obtain the in-memory address of its code. The application may then change the operating system's or platform's protection on this memory range allowing it to modify the code (i.e. insert anticipatory Instruction Sets **526**, etc.). In addition to a self-modifying application, one application can utilize similar technique to modify another application. Linux mprotect command or similar commends of other operating systems can be used to change protection (i.e. unprotect, etc.) for a region of memory, for example. Other platforms, tools, and/or techniques may provide equivalent or similar functionalities as the above described ones.

In a further example, modifying execution and/or functionality of Application Program **18** can be implemented through native capabilities of dynamic, interpreted, and/or scripting programming languages and/or platforms. Most of these languages and/or platforms can perform functionalities at runtime that static programming languages may perform during compilation. Dynamic, interpreted, and/or scripting languages provide native functionalities such as self-modification of code, dynamic code, extending the application, adding new code, extending objects and definitions, and/or other functionalities that can modify an application's execution and/or functionality at runtime. Examples of dynamic, interpreted, and/or scripting languages include Lisp, Perl, PHP, JavaScript, Ruby, Python, Smalltalk, Tcl, VBScript, and/or others. Similar functionalities can also be provided in languages such as Java, C, and/or others using reflection. Reflection includes the ability of an application to examine and modify the structure and behavior of the application at runtime. For example, JavaScript can modify its own code as it runs by utilizing Function object constructor as follows:

```
myFunc=new Function(arg1, arg2, argN, functionBody);
```

The sample code above causes a new function object to be created with the specified arguments and body. The body and/or arguments of the new function object may include new instruction sets (i.e. anticipatory Instruction Sets **526**, etc.). The new function can be invoked as any other function in the original code. In another example, JavaScript can utilize eval method that accepts a string of JavaScript statements (i.e. anticipatory Instruction Sets **526**, etc.) and execute them as if they were within the original code. An example of how eval method can be used to modify an application includes the following JavaScript code:

```
anticipatoryInstr='Device1.moveForward(27);';
if (anticipatoryInstr!=" " && anticipatoryInstr!=null)
{
eval(anticipatoryInstr);
}
```

In the sample code above, Artificial Intelligence Unit **110** may generate anticipatory Instruction Set **526** (i.e. 'Device1.moveForward(27)' for moving a Device1 forward 27 units, etc.) and save it in anticipatoryInstr variable, which eval method can then execute. Lisp is another example of dynamic, interpreted, and/or scripting language that includes similar capabilities as previously described JavaScript. For example, Lisp's compile command can create a function at runtime, eval command may parse and evaluate an expression at runtime, and exec command may execute a given instruction set (i.e. string, etc.) at runtime. In another example, dynamic as well as some non-dynamic languages may provide macros, which combine code introspection and/or eval capabilities. In some aspects, macros can access inner workings of the compiler, interpreter, virtual machine, runtime environment/engine, and/or other components of the computing platform enabling the definition of language-like constructs and/or generation of a complete program or sections thereof. Other platforms, tools, and/or techniques may provide equivalent or similar functionalities as the above described ones.

In a further example, modifying execution and/or functionality of Application Program **18** can be implemented through dynamic code, dynamic class loading, reflection, and/or other native functionalities of a programming language or platform. In static applications or static programming, a class can be defined and/or loaded at compile time. Conversely, in dynamic applications or dynamic programming, a class can be loaded into a running environment at runtime. For example, Java Runtime Environment (JRE) may not require that all classes be loaded at compile time and class loading can occur when a class is first referenced at runtime. Dynamic class loading enables inclusion or

injection of on-demand code and/or functionalities at runtime. System provided or custom class loaders may enable loading of classes into the running environment. Custom class loaders can be created to enable custom functionalities such as, for example, specifying a remote location from which a class can be loaded. In addition to dynamic loading of a pre-defined class, a class can also be created at runtime. In some aspects, a class source code can be created at runtime. A compiler such as javac, com.sun.tools.javac.Main, javax.tools, javax.tools.JavaCompiler, and/or other packages can then be utilized to compile the source code. Javac, com.sun.tools.javac.Main, javax.tools, javax.tools.JavaCompiler, and/or other packages may include an interface to invoke Java compiler from within a running application. A Java compiler may accept source code in a file, string, object (i.e. Java String, StringBuffer, CharSequence, etc.) and/or other source, and may generate Java bytecode (i.e. class file, etc.). Once compiled, a class loader can then load the compiled class into the running environment. In other aspects, a tool such as Javaassist (i.e. Java programming assistant) can be utilized to enable an application to create or modify a class at runtime. Javassist may include a Java library that provides functionalities to create and/or manipulate Java bytecode of an application as well as reflection capabilities. Javassist may provide source-level and bytecode-level APIs. Using the source-level API, a class can be created and/or modified using only source code, which Javassist may compile seamlessly on the fly. Javassist source-level API can therefore be used without knowledge of Java bytecode specification. Bytecode-level API enables creating and/or editing a class bytecode directly. In yet other aspects, similar functionalities to the aforementioned ones may be provided in tools such as Apache Commons BCEL (Byte Code Engineering Library), ObjectWeb ASM, CGLIB (Byte Code Generation Library), and/or others. Once a dynamic code or class is created and loaded, reflection in high-level programming languages such as Java and/or others can be used to manipulate or change the runtime behavior of an application. Examples of reflective programming languages and/or platforms include Java, JavaScript, Smalltalk, Lisp, Python, .NET Common Language Runtime (CLR), Tcl, Ruby, Perl, PHP, Scheme, PL/SQL, and/or others. Reflection can be used in an application to access, examine, modify, and/or manipulate a loaded class and/or its elements. Reflection in Java can be implemented by utilizing a reflection API such as java.lang.Reflect package. The reflection API provides functionalities such as, for example, loading or reloading a class, instantiating a new instance of a class, determining class and instance methods, invoking class and instance methods, accessing and manipulating a class, fields, methods and constructors, determining the modifiers for fields, methods, classes, and interfaces, and/or other functionalities. The above described dynamic code, dynamic class loading, reflection, and/or other functionalities are similarly provided in the .NET platform through its tools such as, for example, System.CodeDom.Compiler namespace, System.Reflection.Emit namespace, and/or other native or other .NET tools. Other platforms in addition to Java and .NET may provide similar tools and/or functionalities. In some designs, dynamic code, dynamic class loading, reflection, and/or other functionalities can be used to facilitate modification of an application by inserting or injecting instruction sets (i.e. anticipatory Instruction Sets **526**, etc.) into a running application. For example, an existing or dynamically created class comprising DCADO Unit **100** functionalities can be loaded into a running application through manual, automatic, or dynamic instrumentation. Once the class is created and loaded, an instance of DCADO Unit **100** class may be constructed. The instance of DCADO Unit **100** can then take or exert control of the application and/or implement alternate instruction sets (i.e. anticipatory Instruction Sets **526**, etc.) at any point in the application's execution. Other platforms, tools, and/or techniques may provide equivalent or similar functionalities as the above described ones.

In a further example, modifying execution and/or functionality of Application Program **18** can be implemented through independent tools that can be utilized across different platforms. Such tools provide instrumentation and/or other capabilities on more than one platform or computing system and may facilitate application modification or insertion of instruction sets (i.e. anticipatory Instruction Sets **526**, etc.). Examples of these tools include Pin, DynamoRIO, DynInst, Kprobes, KernInst, OpenPAT, DTrace, SystemTap, and/or others. In some aspects, Pin and/or any of its elements, methods, and/or techniques can be utilized for dynamic instrumentation. Pin can perform instrumentation by taking control of an application after it loads into memory. Pin may insert itself into the address space of an executing application enabling it to take control. Pin JIT compiler can then compile and implement alternate code (i.e. anticipatory Instruction Sets **526**, etc.). Pin provides an extensive API for instrumentation at several abstraction levels. Pin supports two modes of instrumentation, JIT mode and probe mode. JIT mode uses a just-in-time compiler to insert instrumentation and recompile program code while probe mode uses code trampolines for instrumentation. Pin was designed for architecture and operating system independence. In other aspects, KernInst and/or any of its elements, methods, and/or techniques can be utilized for dynamic instrumentation. KernInst includes an instrumentation framework designed for dynamically inserting code into a running kernel of an operating system. KernInst implements probe-based dynamic instrumentation where code can be inserted, changed, and/or removed at will. Kerninst API enables client tools to construct their own tools for dynamic kernel instrumentation to suit variety of purposes such as insertion of alternate instruction sets (i.e. anticipatory Instruction Sets **526**, etc.). Client tools can communicate with KernInst over a network (i.e. internet, wireless network, LAW, WAN, etc). Other platforms, tools, and/or techniques may provide equivalent or similar functionalities as the above described ones.

In a further example, modifying execution and/or functionality of Application Program **18** can be implemented through utilizing operating system's native tools or capabilities such as Unix ptrace command. Ptrace includes a system call that may enable one process to control another allowing the controller to inspect and manipulate the internal state of its target. Ptrace can be used to modify a running application such as modify an application with alternate instruction sets (i.e. anticipatory Instruction Sets **526**, etc.). By attaching to an application using the ptrace call, the controlling application can gain extensive control over the operation of its target. This may include manipulation of its instruction sets, execution path, file descriptors, memory, registers, and/or other components. Ptrace can single-step through the targets code, observe and intercept system calls and their results, manipulate the targets signal handlers, receive and send signals on the target's behalf, and/or perform other operations within the target application. Ptrace's ability to write into the target application's memory space enables the controller to modify the running code of

the target application. Other platforms, tools, and/or techniques may provide equivalent or similar functionalities as the above described ones.

In a further example, modifying execution and/or functionality of Application Program **18** can be implemented through utilizing just-in-time (JIT) compiling. JIT compilation (also known as dynamic translation, dynamic compilation, etc.) includes compilation performed during an application's execution (i.e. runtime, etc.). A code can be compiled when it is about to be executed, and it may be cached and reused later without the need for additional compilation. In some aspects, a JIT compiler can convert source code or byte code into machine code. In other aspects, a JIT compiler can convert source code into byte code. JIT compiling may be performed directly in memory. For example, JIT compiler can output machine code directly into memory and immediately execute it. Platforms such as Java, .NET, and/or others may implement JIT compilation as their native functionality. Platform independent tools for custom system design may include JIT compilation functionalities as well. In some aspects, JIT compilation includes redirecting application's execution to a JIT compiler from a specific entry point. For example, Pin can insert its JIT compiler into the address space of an application. Once execution is redirected to it, JIT compiler may receive alternate instruction sets (i.e. anticipatory Instruction Sets **526**, etc.) immediately before their compilation. The JIT compiled instruction sets can be stored in memory or another repository from where they may be retrieved and executed. Alternatively, for example, JIT compiler can create a copy of the original application code or a segment thereof, and insert alternate code (i.e. anticipatory Instruction Sets **526**, etc.) before compiling the modified code copy. In some aspects, JIT compiler may include a specialized memory such as fast cache memory dedicated to JIT compiler functionalities from which the modified code can be fetched rapidly. JIT compilation and/or any compilation in general may include compilation, interpretation, or other translation into machine code, bytecode, and/or other formats or types of code. Other platforms, tools, and/or techniques may provide equivalent or similar functionalities as the above described ones.

In a further example, modifying execution and/or functionality of Application Program **18** can be implemented through dynamic recompilation. Dynamic recompilation includes recompiling an application or part thereof during execution. An application can be modified with alternate features or instruction sets that may take effect after recompilation. Dynamic recompilation may be practical in various types of applications including object oriented, event driven, forms based, and/or other applications. In a typical windows-based application, most of the action after initial startup occurs in response to user or system events such as moving the mouse, selecting a menu option, typing text, running a scheduled task, making a network connection, and/or other events when an event handler is called to perform an operation appropriate for the event. Generally, when no events are being generated, the application is idle. For example, when an event occurs and an appropriate event handler is called, instrumentation can be implemented in the application's source code to insert alternate instruction sets (i.e. anticipatory Instruction Sets **526**, etc.) at which point the modified source code can be recompiled and/or executed. In some aspects, the state of the application can be saved before recompiling its modified source code so that the application may continue from its prior state. Saving the application's state can be achieved by saving its variables, data structures, objects, location of its current instruction, and/or other necessary information in environmental variables, memory, or other repositories where they can be accessed once the application is recompiled. In other aspects, application's variables, data structures, objects, address of its current instruction, and/or other necessary information can be saved in a repository such as file, database, or other repository accessible to the application after recompilation of its source code. Other platforms, tools, and/or techniques may provide equivalent or similar functionalities as the above described ones.

In a further example, modifying execution and/or functionality of Application Program **18** can be implemented through modifying or redirecting Application Program's **18** execution path. Generally, an application can be loaded into memory and the flow of execution proceeds from one instruction set to the next until the end of the application. An application may include a branching mechanism that can be driven by keyboard or other input devices, system events, and/or other computing system components or events that may impact the execution path. The execution path can also be altered by an external application through acquiring control of execution and/or redirecting execution to a function, routine/subroutine, or an alternate code segment at any point in the application's execution. A branch, jump, or other mechanism can be utilized to implement the redirected execution. For example, a jump instruction can be inserted at a specific point in an application's execution to redirect execution to an alternate code segment. A jump instruction set may include, for example, an unconditional branch, which always results in branching, or a conditional branch, which may or may not result in branching depending on a condition. When executing an application, a computer may fetch and execute instruction sets in sequence until it encounters a branch instruction set. If the instruction set is an unconditional branch, or it is conditional and the condition is satisfied, the computer may fetch its next instruction set from a different instruction set sequence or code segment as specified by the branch instruction set. After the execution of the alternate code segment, control may be redirected back to the original jump point or to another point in the application. For example, modifying an application can be implemented by redirecting execution of an application to alternate instruction sets (i.e. anticipatory Instruction Sets **526**, etc.). Alternate instruction sets can be pre-compiled, pre-interpreted, or otherwise pre-translated and ready for execution. Alternate instruction sets can also be JIT compiled, JIT interpreted, or otherwise JIT translated before execution. Other platforms, tools, and/or techniques may provide equivalent or similar functionalities as the above described ones.

In a further example, modifying execution and/or functionality of Application Program **18** can be implemented through assembly language. Assembly language instructions may be directly related with the architecture's machine instructions as previously described. Assembly language can, therefore, be a powerful tool for implementing direct hardware (i.e. processor registers, memory, etc.) access and manipulations as well as access and manipulations of specialized processor features or instructions. Assembly language can also be a powerful tool for implementing low-level embedded systems, real-time systems, interrupt handlers, self or dynamically modifying code, and/or other applications. Specifically, for instance, self or dynamically modifying code that can be used to facilitate modifying of an application can be seamlessly implemented using assembly language. For example, using assembly language, instruc-

tion sets can be dynamically created and loaded into memory similar to the ones that a compiler may generate. Furthermore, using assembly language, memory space of a loaded application can be accessed to modify (including rewrite, overwrite, etc.) original instruction sets or to insert jumps or branches to alternate code elsewhere in memory. Some operating systems may implement protection from changes to applications loaded into memory. Operating system's, processor's, or other low level features or commands can be used to unprotect the protected locations in memory before the change as previously described. Alternatively, a pointer that may reside in a memory location where it could be readily altered can be utilized where the pointer may reference alternate code. In one example, assembly language can be utilized to write alternate code (i.e. anticipatory Instruction Sets **526**, etc.) into a location in memory outside a running application's memory space. Assembly language can then be utilized to redirect the application's execution to the alternate code by inserting a jump or branch into the application's in-memory code, by redirecting program counter, or by other technique. In another example, assembly language can be utilized to overwrite or rewrite the entire or part of an application's in-memory code with alternate code. In some aspects, high-level programming languages can call an external assembly language program to facilitate application modification as previously described. In yet other aspects, relatively low-level programming languages such as C may allow embedding assembly language directly in their source code such as, for example, using asm keyword of C. Other platforms, tools, and/or techniques may provide equivalent or similar functionalities as the above described ones.

In a further example, modifying execution and/or functionality of Application Program **18** can be implemented through binary rewriting. Binary rewriting tools and/or techniques may modify an application's executable. In some aspects, modification can be minor such as in the case of optimization where the original executable's functionality is kept. In other aspects, modification may change the application's functionality such as by inserting alternate code (i.e. anticipatory Instruction Sets **526**, etc.). Examples of binary rewriting tools include SecondWrite, ATOM, DynamoRIO, Purify, Pin, EEL, DynInst, PLTO, and/or others. Binary rewriting may include disassembly, analysis, and/or modification of target application. Since binary rewriting works directly on machine code executable, it is independent of source language, compiler, virtual machine (if one is utilized), and/or other higher level abstraction layers. Also, binary rewriting tools can perform application modifications without access to original source code. Binary rewriting tools include static rewriters, dynamic rewriters, minimally-invasive rewriters, and/or others. Static binary rewriters can modify an executable when the executable is not in use (i.e. not running). The rewritten executable may then be executed including any new or modified functionality. Dynamic binary rewriters can modify an executable during its execution, thereby enabling modification of an application's functionality at runtime. In some aspects, dynamic rewriters can be used for instrumentation or selective modifications such as insertion of alternate code (i.e. anticipatory Instruction Sets **526**, etc.), and/or for other runtime transformations or modifications. For example, some dynamic rewriters can be configured to intercept an application's execution at indirect control transfers and insert instrumentation or other application modifying code. Minimally-invasive rewriters may keep the original machine code to the greatest extent possible. They support limited modifications such as insertion of jumps into and out of instrumented code. Other platforms, tools, and/or techniques may provide equivalent or similar functionalities as the above described ones.

Referring to FIG. **30**, in a further example, modifying execution and/or functionality of Processor **11** can be implemented through modification of processor registers, memory, or other computing system components. In some aspects, modifying execution and/or functionality of Processor **11** can be implemented by redirecting Processor's **11** execution to alternate instruction sets (i.e. anticipatory Instruction Sets **526**, etc.). In one example, Program Counter **211** may hold or point to a memory address of the next instruction set that will be executed by Processor **11**. Artificial Intelligence Unit **110** may generate anticipatory Instruction Sets **526** and store them in Memory **12** as previously described. Modification Interface **130** may then change Program Counter **211** to point to the location in Memory **12** where anticipatory Instruction Sets **526** are stored. The anticipatory Instruction Sets **526** can then be fetched from the location in Memory **12** pointed to by the modified Program Counter **211** and loaded into Instruction Register **212** for decoding and execution. Once anticipatory Instruction Sets **526** are executed, Modification Interface **130** may change Program Counter **211** to point to the last instruction set before the redirection or to any other instruction set. In other aspects, anticipatory Instruction Sets **526** can be loaded directly into Instruction Register **212**. As previously described, examples of other processor or computing system components that can be used during an instruction cycle include memory address register (MAR), memory data register (MDR), data registers, address registers, general purpose registers (GPRs), conditional registers, floating point registers (FPRs), constant registers, special purpose registers, machine-specific registers, Register Array **214**, Arithmetic Logic Unit **215**, control unit, and/or other circuits or components. Any of the aforementioned processor registers, memory, or other computing system components can be accessed and/or modified to facilitate the disclosed functionalities. In some embodiments, processor interrupt may be issued to facilitate such access and/or modification. In some designs, modifying execution and/or functionality of Processor **11** can be implemented in a program, combination of programs and hardware, or purely hardware system. Dedicated hardware may be built to perform modifying execution and/or functionality of Processor **11** with marginal or no impact to computing overhead. Other platforms, tools, and/or techniques may provide equivalent or similar functionalities as the above described ones.

Referring to FIGS. **31**A-**31**B, in a further example, modifying execution and/or functionality of Logic Circuit **250** can be implemented through modification of inputs and/or outputs of Logic Circuit **250**. While Processor **11** includes any type of logic circuit, Logic Circuit **250** is described separately herein to offer additional detail on its functioning. Logic Circuit **250** comprises the functionality for performing logic operations using the circuit's inputs and producing outputs based on the logic operations performed as previously described. In one example, Logic Circuit **250** may perform some logic operations using four input values and produce two output values. Modifying execution and/or functionality of Logic Circuit **250** can be implemented by replacing its input values with anticipatory input values (i.e. anticipatory Instruction Sets **526**, etc.). Artificial Intelligence Unit **110** may generate anticipatory input values as previously described. Modification Interface **130** can then transmit the anticipatory input values to Logic Circuit **250** through the four hardwired connections as shown in FIG.

31A. Modification Interface **130** may use Switches **251** to prevent delivery of any input values that may be sent to Logic Circuit **250** from its usual input source. As such, DCADO Unit **100** may cause Logic Circuit **250** to perform its logic operations using the four anticipatory input values, thereby implementing autonomous Device **98** operation. In another example, Logic Circuit **250** may perform some logic operations using four input values and produce two output values. Modifying execution and/or functionality of Logic Circuit **250** can be implemented by replacing its output values with anticipatory output values (i.e. anticipatory Instruction Sets **526**, etc.). Artificial Intelligence Unit **110** may generate anticipatory output values (i.e. anticipatory Instruction Sets **526**, etc.) as previously described. Modification Interface **130** can then transmit the anticipatory output values through the two hardwired connections as shown in FIG. **31**B. Modification Interface **130** may use Switches **251** to prevent delivery of any output values that may be sent by Logic Circuit **250**. As such, DCADO Unit **100** may bypass Logic Circuit **250** and transmit the two anticipatory output values to downstream elements, thereby implementing autonomous Device **98** operation. In a further example, instead of or in addition to modifying input and/or output values of Logic Circuit **250**, the execution and/or functionality of Logic Circuit **250** may be modified by modifying values or signals in one or more Logic Circuit's **250** internal components such as registers, memories, buses, and/or others (i.e. similar to the previously described modifying of Processor **11** components, etc.). In some designs, modifying execution and/or functionality of Logic Circuit **250** can be implemented in a program, combination of programs and hardware, or purely hardware system. Dedicated hardware may be built to perform modifying execution and/or functionality of Logic Circuit **250** with marginal or no impact to computing overhead. Any of the elements and/or techniques for modifying execution and/or functionality of Logic Circuit **250** can similarly be implemented with Processor **11** and/or other processing elements.

In some embodiments, DCADO Unit **100** may directly modify the functionality of an actuator (previously described, not shown). For example, Logic Circuit **250** or other processing element may control an actuator that enables Device **98** to perform mechanical, physical, and/or other operations. An actuator may receive one or more input values or control signals from Logic Circuit **250** or other processing element directing the actuator to perform specific operations. Modifying functionality of an actuator can be implemented by replacing its input values with anticipatory input values (i.e. anticipatory Instruction Sets **526**, etc.) as previously described with respect to replacing input values of Logic Circuit **250**. Specifically, for instance, Artificial Intelligence Unit **110** may generate anticipatory input values as previously described. Modification Interface **130** can then transmit the anticipatory input values to the actuator. Modification Interface **130** may use Switches **251** to prevent delivery of any input values that may be sent to the actuator from its usual input source. As such, DCADO Unit **100** may cause the actuator to perform its operations using the anticipatory input values, thereby implementing autonomous Device **98** operation.

One of ordinary skill in art will recognize that FIGS. **31**A-**31**B depict one of many implementations of Logic Circuit **250** and that any number of input and/or output values can be utilized in alternate implementations. One of ordinary skill in art will also recognize that Logic Circuit **250** may include any number and/or combination of logic components to implement any logic operations.

Other additional techniques or elements can be utilized as needed for modifying execution and/or functionality of Application Program **18**, Processor **11**, Logic Circuit **250**, and/or other processing elements, or some of the disclosed techniques or elements can be excluded, or a combination thereof can be utilized in alternate embodiments.

Referring to FIG. **32**, the illustration shows an embodiment of a method **9100** for learning and/or using a device's circumstances for autonomous device operation. In some aspects, the method can be used on a computing enabled device or system to enable learning of a device's operation in circumstances including objects with various properties and enable autonomous device operation in similar circumstances. Method **9100** may include any action or operation of any of the disclosed methods such as method **9200**, **9300**, **9400**, **9500**, **9600**, and/or others. Additional steps, actions, or operations can be included as needed, or some of the disclosed ones can be optionally omitted, or a different combination or order thereof can be implemented in alternate embodiments of method **9100**.

At step **9105**, a first collection of object representations is received. A collection of object representations (i.e. Collection of Object Representations **525**, etc.) may include one or more object representations (i.e. Object Representations **625**, etc.), object properties (i.e. Object Properties **630**, etc.), and/or other elements or information. An object representation may include an electronic representation of an object (i.e. Object **615**, etc.) detected in a device's surrounding. In some aspects, a collection of object representations may include one or more object representations, object properties, and/or other elements or information detected in a device's (i.e. Device's **98**, etc.) surrounding at a particular time. A collection of object representations may, therefore, include knowledge (i.e. unit of knowledge, etc.) of a device's circumstances including objects with various properties at a particular time. In some designs, a collection of object representations may include or be associated with a time stamp (not shown), order (not shown), or other time related information. In some embodiments, a collection of object representations may include or be substituted with a stream of collections of object representations, and vice versa. Therefore, the terms collection of object representations and stream of collections of object representations may be used interchangeably herein depending on context. A stream of collections of object representations may include one collection of object representations or a group, sequence, or other plurality of collections of object representations. In some aspects, a stream of collections of object representations may include one or more collections of object representations, and/or other elements or information detected in a device's surrounding over time. A stream of collections of object representations may, therefore, include knowledge (i.e. unit of knowledge, etc.) of a device's circumstances including objects with various properties over time. As circumstances including objects with various properties in a device's surrounding change (i.e. objects and/or their properties change, move, act, transform, etc.) over time, this change may be captured in a stream of collections of object representations. In some designs, each collection of object representations in a stream may include or be associated with the aforementioned time stamp, order, or other time related information. Examples of objects include biological objects (i.e. persons, animals, vegetation, etc.), nature objects (i.e. rocks, bodies of water, etc.), manmade objects (i.e. buildings, streets, ground/aerial/aquatic vehicles, etc.), and/or others. In some aspects, any part of an object may be detected as an object itself. For instance,

instead of or in addition to detecting a vehicle as an object, a wheel and/or other parts of the vehicle may be detected as objects. In general, an object may include any object or part thereof that can be detected. Examples of object properties include existence of an object, type of an object (i.e. person, cat, vehicle, building, street, tree, rock, etc.), identity of an object (i.e. name, identifier, etc.), distance of an object, bearing/angle of an object, location of an object (i.e. distance and bearing/angle from a known point, object coordinates, etc.), shape/size of an object (i.e. height, width, depth, computer model, point cloud, etc.), activity of an object (i.e. motion, gestures, etc.), and/or other properties of an object. In general, an object property may include any attribute of an object (i.e. existence of an object, type of an object, identity of an object, shape/size of an object, etc.), any relationship of an object with the device, other objects, or the environment (i.e. distance of an object, bearing/angle of an object, friend/foe relationship, etc.), and/or other information related to an object. Objects and/or their properties can be detected by one or more sensors (i.e. Sensors **92**, etc.) and/or an object processing unit (i.e. Object Processing Unit **93**, etc.). A sensor may obtain or detect information about its environment. As such, one or more sensors can be used to detect objects and/or their properties in a device's surrounding. In some designs, a sensor may be part of a device whose circumstances are being used for DCADO functionalities. In other designs, a sensor may be part of a remote device whose circumstances are being used for DCADO functionalities. Examples of a sensor include a camera (i.e. Camera **92***a*, etc.), a microphone (i.e. Microphone **92***b*, etc.), a lidar (i.e. Lidar **92***c*, etc.), a radar (i.e. Radar **92***d*, etc.), a sonar (i.e. Sonar **92***e*, etc.), and/or others. An object processing unit may process output from a sensor to obtain information of interest. As such, an object processing unit can be used to process output from a sensor to detect objects and/or their properties in a device's surrounding. In some aspects, an object processing unit may create or generate a collection of object representations. In other aspects, an object processing unit may create or generate a stream of collections of object representations. An object processing unit may include a picture recognizer (i.e. Picture Recognizer **94***a*, etc.), a sound recognizer (i.e. Sound Recognizer **94***b*, etc.), a lidar processing unit (i.e. Lidar Processing Unit **94***c*, etc.), a radar processing unit (i.e. Radar Processing Unit **94***d*, etc.), a sonar processing unit (i.e. Sonar Processing Unit **94***e*, etc.), and/or other elements or functionalities. In general, an object processing unit may include any signal processing element or technique known in art as applicable. In some implementations, an object processing unit and/or any of its elements or functionalities can be included in sensor and/or other elements. Receiving comprises any action or operation by or for a Collection of Object Representations **525**, stream of Collections of Object Representations **525**, Object Representation **625**, Object Property **630**, Sensor **92**, Camera **92***a*, Microphone **92***b*, Lidar **92***c*, Radar **92***d*, Sonar **92***e*, Object Processing Unit **93**, Picture Recognizer **94***a*, Sound Recognizer **94***b*, Lidar Processing Unit **94***c*, Radar Processing Unit **94***d*, Sonar Processing Unit **94***e*, and/or other disclosed elements.

At step **9110**, a first one or more instruction sets for operating a device are received. In some embodiments, an instruction set (i.e. Instruction Set **526**, etc.) may be used or executed by a processor (i.e. Processor **11**, etc.) in operating a device. In other embodiments, an instruction set may be part of an application program (i.e. Application Program **18**, etc.) used in operating a device. For example, the application can run or execute on one or more processors or other processing elements. In further embodiments, an instruction set may be used or executed by a logic circuit (i.e. Logic Circuit **250**, etc.) in operating a device. For example, such instruction set may be or include one or more inputs into or outputs from a logic circuit. In further embodiments, an instruction set may be used by an actuator in operating a device. For example, such instruction set may be or include one or more inputs into an actuator. Operating a device includes performing or causing any operations on/by/with the device. In some designs, an instruction set can be received from a processor, application program, logic circuit, and/or other processing element as the instruction set is being used or executed. In other aspects, an instruction set can be received from a processor, application program, logic circuit, and/or other processing element after the instruction set is used or executed. In further aspects, an instruction set can be received from a processor, application program, logic circuit, and/or other processing element before the instruction set has been used or executed. In further aspects, an instruction set can be received from a running processor, running application program, running logic circuit, and/or other running processing element. As such, an instruction set can be received at runtime. In other designs, an instruction set can be received from an actuator. In further designs, an instruction set can be received from memory (i.e. Memory **12**, etc.), hard drive, or any other storage element or repository. In further designs, an instruction set can be received over a network such as Internet, local area network, wireless network, and/or other network. In further designs, an instruction set can be received by an interface (i.e. Acquisition Interface **120**, etc.) configured to obtain instruction sets from a processor, application program, logic circuit, actuator, and/or other element. In general, an instruction set can be received by any element of the system. One or more instruction sets may temporally correspond to a collection of object representations. In some aspects, an instruction set that temporally corresponds to a collection of object representations includes an instruction set used or executed at the time of generating the collection of object representations. In other aspects, an instruction set that temporally corresponds to a collection of object representations includes an instruction set used or executed within a certain time period before and/or after generating the collection of object representations. Any time period can be utilized depending on implementation. In further aspects, an instruction set that temporally corresponds to a collection of object representations includes an instruction set used or executed from the time of generating the collection of object representations to the time of generating a next collection of object representations. In further aspects, an instruction set that temporally corresponds to a collection of object representations includes an instruction set used or executed from the time of generating a preceding collection of object representations to the time of generating the collection of object representations. Any other temporal relationship or correspondence between collections of object representations and correlated instruction sets can be implemented. In general, one or more instruction sets that temporally correspond to a collection of object representations enable structuring knowledge of a device's operation at or around the time of generating the collection of object representations. Such functionality enables spontaneous or seamless learning of a device's operation in circumstances including objects with various properties as the device is operated in real life situations. In some embodiments, an instruction set may include one or more commands, keywords, symbols (i.e. parentheses, brackets, commas, semicolons, etc.), instructions, operators

(i.e. =, <, >, etc.), variables, values, objects, data structures, functions (i.e. Function1( ), FIRST( ), MIN( ), SQRT( ), etc.), parameters, states, signals, inputs, outputs, references thereto, and/or other components. In other embodiments, an instruction set may include source code, bytecode, intermediate code, compiled, interpreted, or otherwise translated code, runtime code, assembly code, machine code, and/or any other computer code. In further embodiments, an instruction set may include one or more inputs into and/or outputs from a logic circuit. In further embodiments, an instruction set may include one or more inputs into an actuator. Receiving comprises any action or operation by or for an Acquisition Interface **120**, Instruction Set **526**, and/or other disclosed elements.

At step **9115**, the first collection of object representations is correlated with the first one or more instruction sets for operating the device. In some aspects, individual collections of object representations can be correlated with one or more instruction sets. In other aspects, streams of collections of object representations can be correlated with one or more instruction sets. In further aspects, individual collections of object representations or streams of collections of object representations can be correlated with the aforementioned temporally corresponding instruction sets. In further aspects, a collection of object representations or stream of collections of object representations may not be correlated with any instruction sets. Correlating may include structuring or generating a knowledge cell (i.e. Knowledge Cell **800**, etc.) and storing one or more collections of object representations correlated with any instruction sets into the knowledge cell. Therefore, a knowledge cell may include any data structure or arrangement that can facilitate such storing. A knowledge cell includes knowledge (i.e. unit of knowledge, etc.) of how a device operated in a circumstance including objects with various properties. In some designs, extra information (i.e. Extra Info **527**, etc.) may optionally be used to facilitate enhanced comparisons or decision making in autonomous device operation where applicable. Therefore, any collection of object representations, instruction set, and/or other element may include or be correlated with extra information. Extra information may include any information useful in comparisons or decision making performed in autonomous device operation. Examples of extra information include time information, location information, computed information, contextual information, and/or other information. Correlating may be omitted where learning of a device's operation in circumstances including objects with various properties is not implemented. Correlating comprises any action or operation by or for a Knowledge Structuring Unit **520**, Knowledge Cell **800**, and/or other disclosed elements.

At step **9120**, the first collection of object representations correlated with the first one or more instruction sets for operating the device are stored. A collection of object representations correlated with one or more instruction sets may be part of a stored plurality of collections of object representations correlated with one or more instruction sets. Collections of object representations correlated with any instruction sets can be stored in a memory unit or other repository. The aforementioned knowledge cells comprising collections of object representations correlated with any instruction sets can be used in/as neurons, nodes, vertices, or other elements in any of the data structures or arrangements (i.e. neural networks, graphs, sequences, collection of knowledge cells, etc.) used for storing the knowledge of a device's operation in circumstances including objects with various properties. Knowledge cells may be connected, interrelated, or interlinked into knowledge structures using statistical, artificial intelligence, machine learning, and/or other models or techniques. Such interconnected or interrelated knowledge cells can be used for enabling autonomous device operation. The interconnected or interrelated knowledge cells may be stored or organized into a knowledgebase (i.e. Knowledgebase **530**, etc.). In some embodiments, knowledgebase may be or include a neural network (i.e. Neural Network **530***a*, etc.). In other embodiments, knowledgebase may be or include a graph (i.e. Graph **530***b*, etc.). In further embodiments, knowledgebase may be or include a collection of sequences (i.e. Collection of Sequences **530***c*, etc.). In further embodiments, knowledgebase may be or include a sequence (i.e. Sequence **533**, etc.). In further embodiments, knowledgebase may be or include a collection of knowledge cells (i.e. Collection of Knowledge Cells **530***d*, etc.). In general, knowledgebase may be or include any data structure or arrangement, and/or repository capable of storing the knowledge of a device's operation in circumstances including objects with various properties. Knowledgebase may also include or be substituted with various artificial intelligence methods, systems, and/or models for knowledge structuring, storing, and/or representation such as deep learning, supervised learning, unsupervised learning, neural networks (i.e. convolutional neural network, recurrent neural network, deep neural network, etc.), search-based, logic and/or fuzzy logic-based, optimization-based, tree/graph/other data structure-based, hierarchical, symbolic and/or sub-symbolic, evolutionary, genetic, multi-agent, deterministic, probabilistic, statistical, and/or other methods, systems, and/or models. Storing may be omitted where learning of a device's operation in circumstances including objects with various properties is not implemented. Storing comprises any action or operation by or for a Knowledgebase **530**, Neural Network **530***a*, Graph **530***b*, Collection of Sequences **530***c*, Sequence **533**, Collection of Knowledge Cells **530***d*, Knowledge Cell **800**, Node **852**, Layer **854**, Connection **853**, Similarity Comparison **125**, and/or other disclosed elements.

At step **9125**, a new collection of object representations is received. Step **9125** may include any action or operation described in Step **9105** as applicable.

At step **9130**, the new collection of object representations is compared with the first collection of object representations. Comparing one collection of object representations with another collection of object representations may include comparing at least a portion of one collection of object representations with at least a portion of the other collection of object representations. In some embodiments, collections of object representations may be compared individually. In some aspects, comparing of individual collections of object representations may include comparing one or more object representations of one collection of object representations with one or more object representations of another collection of object representations. In other aspects, comparing of object representations may include comparing one or more object properties of one object representation with one or more object properties of another object representation. In some designs, one or more object properties in the same category (i.e. Category **635**, etc.) can be compared. Comparing may include any techniques for comparing text, numbers, and/or other data. In further aspects, some object representations, object properties, and/or other elements of a collection of object representations can be omitted from comparison depending on implementation. In other embodiments, collections of object representations may be compared collectively as part of streams of collections of object representations. Collective comparing of collections of

object representations may include any features, functionalities, and embodiments of the aforementioned individual comparing of collections of object representations. In some aspects, collective comparing of collections of object representations may include comparing one or more collections of object representations of one stream of collections of object representations with one or more collections of object representations of another stream of collections of object representations. In some designs, one or more corresponding (i.e. similarly ordered, temporally related, etc.) collections of object representations from the compared streams of collections of object representations can be compared. In other designs, Dynamic Time Warping (DTW) and/or other techniques can be utilized for comparison and/or aligning temporal sequences (i.e. streams of collections of object representations, etc.) that may vary in time or speed. In further aspects, some collections of object representations can be omitted from comparison depending on implementation. Any combination of the aforementioned and/or other elements or techniques can be utilized in alternate embodiments of the comparing. Comparing may be omitted where anticipating of a device's operation in circumstances including objects with various properties is not implemented. Comparing comprises any action or operation by or for a Decision-making Unit **540**, Similarity Comparison **125**, and/or other disclosed elements.

At step **9135**, a determination is made that there is at least a partial match between the new collection of object representations and the first collection of object representations. In some embodiments, determining at least a partial match between individually compared collections of object representations includes determining that a similarity between one or more portions of one collection of object representations and one or more portions of another collection of object representations exceeds a similarity threshold. In other embodiments, determining at least a partial match between individually compared collections of object representations includes determining at least a partial match between one or more portions of one collection of object representations and one or more portions of another collection of object representations. In further embodiments, determining at least a partial match between individually compared collections of object representations includes determining substantial similarity between one or more portions of one collection of object representations and one or more portions of another collection of object representations. A portion of a collection of object representations may include an object representation, an object property, and/or other portion or element of the collection of object representations. In further embodiments, determining at least a partial match between individually compared collections of object representations includes determining that the number or percentage of matching or substantially matching object representations of the compared collections of object representations exceeds a threshold number (i.e. 1, 2, 4, 7, 18, etc.) or threshold percentage (i.e. 41%, 62%, 79%, 85%, 93%, etc.). In some aspects, type of object representations, importance of object representations, and/or other elements or techniques relating to object representations can be utilized for determining similarity using object representations. In further aspects, some of the object representations can be omitted in determining similarity using object representations depending on implementation. In further embodiments, determining a match or substantial match between compared object representations includes determining that the number or percentage of matching or substantially matching object properties of the compared object representations exceeds a threshold number (i.e. 1, 2, 3, 6, 11, etc.) or a threshold percentage (i.e. 55%, 61%, 78%, 82%, 99%, etc.). In some aspects, categories of object properties, importance of object properties, and/or other elements or techniques relating to object properties can be utilized for determining similarity using object properties. In further aspects, some of the object properties can be omitted in determining similarity using object properties depending on implementation. In some designs, substantial similarity of individually compared collections of object representations can be achieved when a similarity between one or more portions of one collection of object representations and one or more portions of another collection of object representations exceeds a similarity threshold. In other designs, substantial similarity of individually compared collections of object representations can be achieved when the number or percentage of matching or substantially matching object representations of the compared collections of object representations exceeds a threshold number (i.e. 1, 2, 4, 7, 18, etc.) or threshold percentage (i.e. 41%, 62%, 79%, 85%, 93%, etc.). In further aspects, substantial similarity of compared object representations can be achieved when the number or percentage of matching or substantially matching object properties of the compared object representations exceeds a threshold number (i.e. 1, 2, 3, 6, 11, etc.) or a threshold percentage (i.e. 55%, 61%, 78%, 82%, 99%, etc.). In some embodiments, determining at least a partial match between collectively compared collections of object representations (i.e. streams of collections of object representations, etc.) includes determining that the number or percentage of matching or substantially matching collections of object representations of the compared streams of collections of object representations exceeds a threshold number (i.e. 1, 2, 4, 9, 33, 138, etc.) or threshold percentage (i.e. 39%, 58%, 77%, 88%, 94%, etc.). In some aspects, importance of collections of object representations, order of collections of object representations, and/or other elements or techniques relating to collections of object representations can be utilized for determining similarity of collectively compared collections of object representations or streams of collections of object representations. In further aspects, some of the collections of object representations can be omitted in determining similarity of collectively compared collections of object representations or streams of collections of object representations depending on implementation. In some designs, a threshold for a number or percentage similarity can be used to determine a match or substantial match between any of the aforementioned elements. Any text, number, and/or other data similarity determination techniques can be used in any of the aforementioned similarity determinations. A partial match of any of the compared elements may include a substantially or otherwise similar match, and vice versa. Therefore, these terms may be used interchangeably herein depending on context. Although, substantial similarity or substantial match is frequently used herein, it should be understood that any level of similarity, however high or low, may be utilized as defined by the rules (i.e. thresholds, etc.) for similarity. Any combination of the aforementioned and/or other elements or techniques can be utilized in alternate embodiments. Determining may be omitted where anticipating of a device's operation in circumstances including objects with various properties is not implemented. Determining comprises any action or operation by or for a Decision-making Unit **540**, Similarity Comparison **125**, and/or other disclosed elements.

At step **9140**, the first one or more instruction sets for operating the device correlated with the first collection of

object representations are executed. Executing may be performed in response to the aforementioned determining. Executing may be caused by DCADO Unit **100**, Artificial Intelligence Unit **110**, Modification Interface **130**, and/or other disclosed elements. An instruction set may be executed by a processor (i.e. Processor **11**, etc.), application program (i.e. Application Program **18**, etc.), logic circuit (i.e. Logic Circuit **250**, etc.), and/or other processing element. An instruction set may be executed or acted upon by an actuator. In some aspects, instruction sets (i.e. the one or more instruction sets for operating the device correlated with the first collection of object representations, etc.) anticipated or determined to be used or executed in a device's autonomous operation may be referred to as anticipatory instruction sets, alternate instruction sets, and/or other suitable name or reference. Therefore, these terms can be used interchangeably herein depending on context. Executing may include executing one or more alternate instruction sets (i.e. anticipatory instruction sets, etc.) instead of or prior to an instruction set that would have been executed in a regular course of execution. In some embodiments, executing may include modifying a register or other element of a processor with one or more alternate instruction sets. Executing may also include redirecting a processor to one or more alternate instruction sets. In other embodiments, processor may be or comprises a logic circuit. Executing may further include modifying an element of a logic circuit with one or more alternate instruction sets, redirecting the logic circuit to one or more alternate instruction sets, replacing the inputs into the logic circuit with one or more alternate inputs or instruction sets, and/or replacing the outputs from the logic circuit with one or more alternate outputs or instruction sets. Executing may further include replacing the inputs into an actuator with one or more alternate inputs or instruction sets. In further embodiments, a processor may run an application including instruction sets for operating a device. In some aspects, executing includes executing one or more alternate instruction sets as part of the application. In other aspects, executing includes modifying the application. In further aspects, executing includes redirecting the application to one or more alternate instruction sets. In further aspects, executing includes modifying one or more instruction sets of the application. In further aspects, executing includes modifying the application's source code, bytecode, intermediate code, compiled code, interpreted code, translated code, runtime code, assembly code, machine code, or other code. In further aspects, executing includes modifying memory, processor register, storage, repository or other element where the application's instruction sets are stored or used. In further aspects, executing includes modifying instruction sets used for operating an object of the application. In further aspects, executing includes modifying an element of a processor, an element of a device, a virtual machine, a runtime engine, an operating system, an execution stack, a program counter, or a user input used in running the application. In further aspects, executing includes modifying the application at source code write time, compile time, interpretation time, translation time, linking time, loading time, runtime, or other time. In further aspects, executing includes modifying one or more of the application's lines of code, statements, instructions, functions, routines, subroutines, basic blocks, or other code segments. In further aspects, executing includes a manual, automatic, dynamic, just in time (JIT), or other instrumentation of the application. In further aspects, executing includes utilizing one or more of a .NET tool, .NET application programming interface (API), Java tool, Java API, operating system tool, independent tool, or other tool for modifying the application. In further aspects, executing includes utilizing a dynamic, interpreted, scripting, or other programming language. In further aspects, executing includes utilizing dynamic code, dynamic class loading, or reflection. In further aspects, executing includes utilizing assembly language. In further aspects, executing includes utilizing metaprogramming, self-modifying code, or an application modification tool. In further aspects, executing includes utilizing just in time (JIT) compiling, JIT interpretation, JIT translation, dynamic recompiling, or binary rewriting. In further aspects, executing includes utilizing dynamic expression creation, dynamic expression execution, dynamic function creation, or dynamic function execution. In further aspects, executing includes adding or inserting additional code into the application's code. In further aspects, executing includes modifying, removing, rewriting, or overwriting the application's code. In further aspects, executing includes branching, redirecting, extending, or hot swapping the application's code. Branching or redirecting an application's code may include inserting a branch, jump, or other means for redirecting the application's execution. Executing comprises any action or operation by or for a Processor **11**, Application Program **18**, Logic Circuit **250**, Modification Interface **130**, and/or other disclosed elements.

At step **9145**, one or more operations defined by the first one or more instruction sets for operating the device correlated with the first collection of object representations are performed by the device. The one or more operations may be performed in response to the aforementioned executing. In some aspects, an operation includes any operation that can be performed by/with/on a computing enabled device. In other aspects, an operation includes any operation that can be performed by/with/on an actuator. In further aspects, an operation includes any operation that can be performed by/with/on a computer. In general, an operation includes any operation that can be performed by/with/on a device or element thereof. One of ordinary skill in art will recognize that, while all possible variations of operations by/with/on a device are too voluminous to describe and limited only by the device's design and/or user's utilization, all operations are within the scope of this disclosure in various implementations.

Referring to FIG. **33**, the illustration shows an embodiment of a method **9200** for learning and/or using a device's circumstances for autonomous device operation. In some aspects, the method can be used on a computing enabled device or system to enable learning of a device's operation in circumstances including objects with various properties and enable autonomous device operation in similar circumstances. Method **9200** may include any action or operation of any of the disclosed methods such as method **9100**, **9300**, **9400**, **9500**, **9600**, and/or others. Additional steps, actions, or operations can be included as needed, or some of the disclosed ones can be optionally omitted, or a different combination or order thereof can be implemented in alternate embodiments of method **9200**.

At step **9205**, a first collection of object representations is received. Step **9205** may include any action or operation described in Step **9105** of method **9100** as applicable.

At step **9210**, a first one or more instruction sets for operating a device are received. Step **9210** may include any action or operation described in Step **9110** of method **9100** as applicable.

At step **9215**, the first collection of object representations correlated with the first one or more instruction sets for operating the device are learned. Step **9215** may include any

action or operation described in Step **9115** and/or Step **9120** of method **9100** as applicable.

At step **9220**, a new collection of object representations is received. Step **9220** may include any action or operation described in Step **9125** of method **9100** as applicable.

At step **9225**, the first one or more instruction sets for operating the device correlated with the first collection of object representations are anticipated based on at least a partial match between the new collection of object representations and the first collection of object representations. Step **9225** may include any action or operation described in Step **9130** and/or Step **9135** of method **9100** as applicable.

At step **9230**, the first one or more instruction sets for operating the device correlated with the first collection of object representations are executed. Step **9230** may include any action or operation described in Step **9140** of method **9100** as applicable.

At step **9235**, one or more operations defined by the first one or more instruction sets for operating the device correlated with the first collection of object representations are performed by the device. Step **9235** may include any action or operation described in Step **9145** of method **9100** as applicable.

Referring to FIG. **34**, the illustration shows an embodiment of a method **9300** for learning and/or using a device's circumstances for autonomous device operation. In some aspects, the method can be used on a computing enabled device or system to enable learning of a device's operation in circumstances including objects with various properties and enable autonomous device operation in similar circumstances. Method **9300** may include any action or operation of any of the disclosed methods such as method **9100**, **9200**, **9400**, **9500**, **9600**, and/or others. Additional steps, actions, or operations can be included as needed, or some of the disclosed ones can be optionally omitted, or a different combination or order thereof can be implemented in alternate embodiments of method **9300**.

At step **9305**, a first stream of collections of object representations is received. Step **9305** may include any action or operation described in Step **9105** of method **9100** as applicable.

At step **9310**, a first one or more instruction sets for operating a device are received. Step **9310** may include any action or operation described in Step **9110** of method **9100** as applicable.

At step **9315**, the first stream of collections of object representations is correlated with the first one or more instruction sets for operating the device. Step **9315** may include any action or operation described in Step **9115** of method **9100** as applicable.

At step **9320**, the first stream of collections of object representations correlated with the first one or more instruction sets for operating the device are stored. Step **9320** may include any action or operation described in Step **9120** of method **9100** as applicable.

At step **9325**, a new stream of collections of object representations is received. Step **9325** may include any action or operation described in Step **9125** of method **9100** as applicable.

At step **9330**, the new stream of collections of object representations is compared with the first stream of collections of object representations. Step **9330** may include any action or operation described in Step **9130** of method **9100** as applicable.

At step **9335**, a determination is made that there is at least a partial match between the new stream of collections of object representations and the first stream of collections of object representations. Step **9335** may include any action or operation described in Step **9135** of method **9100** as applicable.

At step **9340**, the first one or more instruction sets for operating the device correlated with the first stream of collections of object representations are executed. Step **9340** may include any action or operation described in Step **9140** of method **9100** as applicable.

At step **9345**, one or more operations defined by the first one or more instruction sets for operating the device correlated with the first stream of collections of object representations are performed by the device. Step **9345** may include any action or operation described in Step **9145** of method **9100** as applicable.

Referring to FIG. **35**, the illustration shows an embodiment of a method **9400** for learning and/or using a device's circumstances for autonomous device operation. In some aspects, the method can be used on a computing enabled device or system to enable learning of a device's operation in circumstances including objects with various properties and enable autonomous device operation in similar circumstances. Method **9400** may include any action or operation of any of the disclosed methods such as method **9100**, **9200**, **9300**, **9500**, **9600**, and/or others. Additional steps, actions, or operations can be included as needed, or some of the disclosed ones can be optionally omitted, or a different combination or order thereof can be implemented in alternate embodiments of method **9400**.

At step **9405**, a first collection of object representations is received. Step **9405** may include any action or operation described in Step **9105** of method **9100** as applicable.

At step **9410**, a first one or more inputs are received, wherein the first one or more inputs are also received by a logic circuit, and wherein the logic circuit is configured to receive inputs and produce outputs, and wherein the outputs are used for operating a device. Step **9410** may include any action or operation described in Step **9110** of method **9100** as applicable.

At step **9415**, the first collection of object representations is correlated with the first one or more inputs. Step **9415** may include any action or operation described in Step **9115** of method **9100** as applicable.

At step **9420**, the first collection of object representations correlated with the first one or more inputs are stored. Step **9420** may include any action or operation described in Step **9120** of method **9100** as applicable.

At step **9425**, a new collection of object representations is received. Step **9425** may include any action or operation described in Step **9125** of method **9100** as applicable.

At step **9430**, the new collection of object representations is compared with the first collection of object representations. Step **9430** may include any action or operation described in Step **9130** of method **9100** as applicable.

At step **9435**, a determination is made that there is at least a partial match between the new collection of object representations and the first collection of object representations. Step **9435** may include any action or operation described in Step **9135** of method **9100** as applicable.

At step **9440**, the first one or more inputs correlated with the first collection of object representations are received by the logic circuit. Step **9440** may include any action or operation described in Step **9140** of method **9100** as applicable.

At step **9445**, one or more operations defined by one or more outputs for operating the device produced by the logic

circuit are performed by the device. Step **9445** may include any action or operation described in Step **9145** of method **9100** as applicable.

Referring to FIG. **36**, the illustration shows an embodiment of a method **9500** for learning and/or using a device's circumstances for autonomous device operation. In some aspects, the method can be used on a computing enabled device or system to enable learning of a device's operation in circumstances including objects with various properties and enable autonomous device operation in similar circumstances. Method **9500** may include any action or operation of any of the disclosed methods such as method **9100**, **9200**, **9300**, **9400**, **9600**, and/or others. Additional steps, actions, or operations can be included as needed, or some of the disclosed ones can be optionally omitted, or a different combination or order thereof can be implemented in alternate embodiments of method **9500**.

At step **9505**, a first collection of object representations is received. Step **9505** may include any action or operation described in Step **9105** of method **9100** as applicable.

At step **9510**, a first one or more outputs are received, the first one or more outputs transmitted from a logic circuit, wherein the logic circuit is configured to receive inputs and produce outputs, and wherein the outputs are used for operating a device. Step **9510** may include any action or operation described in Step **9110** of method **9100** as applicable.

At step **9515**, the first collection of object representations is correlated with the first one or more outputs. Step **9515** may include any action or operation described in Step **9115** of method **9100** as applicable.

At step **9520**, the first collection of object representations correlated with the first one or more outputs are stored. Step **9520** may include any action or operation described in Step **9120** of method **9100** as applicable.

At step **9525**, a new collection of object representations is received. Step **9525** may include any action or operation described in Step **9125** of method **9100** as applicable.

At step **9530**, the new collection of object representations is compared with the first collection of object representations. Step **9530** may include any action or operation described in Step **9130** of method **9100** as applicable.

At step **9535**, a determination is made that there is at least a partial match between the new collection of object representations and the first collection of object representations. Step **9535** may include any action or operation described in Step **9135** of method **9100** as applicable.

At step **9540**, one or more operations defined by the first one or more outputs correlated with the first collection of object representations are performed by the device. Step **9540** may include any action or operation described in Step **9145** of method **9100** as applicable.

Referring to FIG. **37**, the illustration shows an embodiment of a method **9600** for learning and/or using a device's circumstances for autonomous device operation. In some aspects, the method can be used on a computing enabled device or system to enable learning of a device's operation in circumstances including objects with various properties and enable autonomous device operation in similar circumstances. Method **9600** may include any action or operation of any of the disclosed methods such as method **9100**, **9200**, **9300**, **9400**, **9500**, and/or others. Additional steps, actions, or operations can be included as needed, or some of the disclosed ones can be optionally omitted, or a different combination or order thereof can be implemented in alternate embodiments of method **9600**.

At step **9605**, a first collection of object representations is received. Step **9605** may include any action or operation described in Step **9105** of method **9100** as applicable.

At step **9610**, a first one or more inputs are received, wherein the first one or more inputs are also received by an actuator, and wherein the actuator is configured to receive inputs and perform motions. Step **9610** may include any action or operation described in Step **9110** of method **9100** as applicable.

At step **9615**, the first collection of object representations is correlated with the first one or more inputs. Step **9615** may include any action or operation described in Step **9115** of method **9100** as applicable.

At step **9620**, the first collection of object representations correlated with the first one or more inputs are stored. Step **9620** may include any action or operation described in Step **9120** of method **9100** as applicable.

At step **9625**, a new collection of object representations is received. Step **9625** may include any action or operation described in Step **9125** of method **9100** as applicable.

At step **9630**, the new collection of object representations is compared with the first collection of object representations. Step **9630** may include any action or operation described in Step **9130** of method **9100** as applicable.

At step **9635**, a determination is made that there is at least a partial match between the new collection of object representations and the first collection of object representations. Step **9635** may include any action or operation described in Step **9135** of method **9100** as applicable.

At step **9640**, the first one or more inputs correlated with the first collection of object representations are received by the actuator. Step **9640** may include any action or operation described in Step **9140** of method **9100** as applicable.

At step **9645**, one or more motions defined by the first one or more inputs correlated with the first collection of object representations are performed by the actuator. Step **9645** may include any action or operation described in Step **9145** of method **9100** as applicable.

Referring to FIG. **38**, in some exemplary embodiments, Device **98** may be or include Loader **98***a*. Loader **98***a* may be operated by User **50** in person or remotely. Loader **98***a* may include or be coupled to one or more Sensors **92** (i.e. collectively referred to as Sensor **92**, etc.) such as Camera **92***a*, Microphone **92***b*, Lidar **92***c*, Radar **92***d*, Sonar **92***e*, etc. and/or Object Processing Unit **93** that can detect Objects **615***aa*-**615***ad*, and/or other elements or information in Loader's **98***a* surrounding. Object Processing Unit **93** may include Picture Recognizer **94***a*, Sound Recognizer **94***b*, Lidar Processing Unit **94***c*, Radar Processing Unit **94***d*, Sonar Processing Unit **94***e*, and/or other elements or functionalities as applicable. Object Processing Unit **93** may create or generate one or more (i.e. stream, etc.) Collections of Object Representations **525** comprising Object Representations **625**, Object Properties **630**, and/or other elements or information representing Objects **615** detected in Loader's **98***a* surrounding. Loader **98***a* may also include or be controlled by Logic Circuit **250** (i.e. microcontroller, etc.), Processor **11** (i.e. including any Application Program **18** running thereon, etc.), and/or other processing element that receives User's **50** (i.e. operator's, etc.) operating directions and causes desired operations with Loader **98***a* such as moving, maneuvering, collecting, lifting, unloading, and/or others. User **50** can interact with Logic Circuit **250**, Processor **11**, Application Program **18**, and/or other processing element through inputting operating directions via Human-machine Interface **23** such as one or more steering wheels, levers, pedals, buttons, or other input devices. For instance,

responsive to User's **50** manipulating a steering wheel and one or more levers, Logic Circuit **250** or Processor **11** may cause Loader's **98***a* arm with bucket to collect a load, one or more motors or other actuators to move or maneuver Loader **98***a*, lifting system (i.e. hydraulic, pneumatic, mechanical, electrical, etc.) to lift a load, and/or arm with bucket to unload a load. Loader **98***a* may also include or be coupled to DCADO Unit **100**. DCADO Unit **100** may be embedded (i.e. integrated, etc.) into or coupled to Loader's **98***a* Logic Circuit **250**, Processor **11**, and/or other processing element. DCADO Unit **100** may also be a program embedded (i.e. integrated, etc.) into or interfaced with Application Program **18** running on Processor **11** and/or other processing element. DCADO Unit **100** can obtain Instruction Sets **526** used or executed by Logic Circuit **250**, Processor **11**, Application Program **18**, and/or other processing element. In some aspects, Instruction Sets **526** may include one or more inputs into or outputs from Loader's **98***a* Logic Circuit **250** (i.e. microcontroller, etc.). In other aspects, Instruction Sets **526** may include one or more instruction sets from Loader's **98***a* Processor's **11** registers or other components. In further aspects, Instruction Sets **526** may include one or more instruction sets used or executed in Application Program **18**. DCADO Unit **100** may also optionally obtain any Extra Info **527** (i.e. time, location, computed, contextual, and/or other information, etc.) related to Loader's **98***a* operation. As User **50** operates Loader **98***a* in circumstances including objects with various properties as shown, DCADO Unit **100** may learn Loader's **98***a* operations in these circumstances by correlating Collections of Object Representations **525** representing Objects **615** detected in Loader's **98***a* surrounding with one or more Instruction Sets **526** used or executed by Logic Circuit **250**, Processor **11**, Application Program **18**, and/or other processing element. Any Extra Info **527** related to Loader's **98***a* operation may also optionally be correlated with Collections of Object Representations **525**. DCADO Unit **100** may store this knowledge into Knowledgebase **530** (i.e. Neural Network **530***a*, Graph **530***b*, Collection of Sequences **530***c*, Sequence **533**, Collection of Knowledge Cells **530***d*, etc.). In the future, DCADO Unit **110** may compare incoming Collections of Object Representations **525** representing Objects **615** detected in Loader's **98***a* surrounding with previously learned Collections of Object Representations **525** including optionally using any Extra Info **527** for enhanced decision making. If substantially similar or at least a partial match is found or determined, the Instruction Sets **526** correlated with the previously learned Collections of Object Representations **525** can be autonomously executed by Logic Circuit **250**, Processor **11**, Application Program **18**, and/or other processing element, thereby enabling autonomous operation of Loader **98***a* in similar circumstances as in previously learned ones. For instance, Loader **98***a* comprising DCADO Unit **100** may learn User **50**-directed collecting, moving, maneuvering, lifting, unloading, and/or other operations in a circumstance that includes Rock **615***aa*, Pile of Material **615***ab*, Person **615***ac*, Truck **615***ad*, and/or other Objects **615** among which Loader **98***a* may need to maneuver and/or with which Loader **98***a* may need to interact. In the future, when a circumstance that includes Objects **615** with similar Object Properties **630** is encountered, Loader **98***a* may implement collecting, moving, maneuvering, lifting, and/or unloading operations autonomously.

In some embodiments, DCADO Unit **100** may reside on Server **96** accessible over Network **95** as previously described. In such embodiments, any number of Loaders **98***a* may connect to such remote DCADO Unit **100** and the remote DCADO Unit **100** may learn their operations in circumstances including objects with various properties. In turn, any number of Loaders **98***a* can utilize the remote DCADO Unit **100** for autonomous operation in circumstances including objects with various properties. For example, multiple operators (i.e. Users **50**, etc.) may operate their Loaders **98***a* that are configured to transmit their operations in circumstances including objects with various properties to a remote DCADO Unit **100**. Such remote DCADO Unit **100** enables learning of the operators' collective knowledge of operating Loaders **98** in circumstances including objects with various properties. Any number of Loaders **98** can utilize such collective knowledge comprised in the remote DCADO Unit **100** for their autonomous operation. Any of the disclosed elements such as Artificial Intelligence Unit **110**, Knowledgebase **530**, and/or others may reside on Server **96**, and any combination of local and remote elements can be implemented in alternate embodiments.

In some embodiments, Loader **98***a* may include or be coupled to a plurality of Sensors **92** and/or their corresponding Object Processing Units **93**. In one example, multiple Sensors **92** may detect objects and/or their properties from different angles or on different sides of Loader **98***a*. In another example, one or more Sensors **92** may be placed on different sub-devices, sub-systems, or elements of Loader **98***a*. For instance, one Sensor **92** may be placed on the roof of Loader **98***a*, another Sensor **92** may be placed on the arm of Loader **98***a*, and an additional Sensor **92** may be placed on the bucket of Loader **98***a*. In some designs where multiple Sensors **92** are placed on different sub-devices, sub-systems, or elements of Loader **98***a*, multiple DCADO Units **100** can be utilized (i.e. one DCADO Unit **100** for each Sensor **92** or group of Sensors **92** and/or their corresponding Object Processing Units **93**, etc.). In such designs, as User **50** operates Loader **98***a* in circumstances including objects with various properties, a particular DCADO Unit **100** may learn operations of Loader's **98***a* sub-device, sub-system, or element in these circumstances by correlating Collections of Object Representations **525** representing Objects **615** detected by Sensor **92** on the sub-device, sub-system, or element assigned to the DCADO Unit **100** with one or more Instruction Sets **526** used or executed by Logic Circuit **250**, Processor **11**, Application Program **18**, and/or other processing element. The learning and/or decision making in Loader's **98***a* operation can, therefore, be performed per individual sub-device, sub-system, or element. In other designs where multiple Sensors **92** are placed on different sub-devices, sub-systems, or elements of Loader **98***a*, as User **50** operates Loader **98***a* in circumstances including objects with various properties, a single DCADO Unit **100** may learn Loader's **98***a* operations in these circumstances by correlating collective Collections of Object Representations **525** representing Objects **615** detected by Sensors **92** on the sub-devices, sub-systems, or elements with one or more Instruction Sets **526** used or executed by Logic Circuit **250**, Processor **11**, Application Program **18**, and/or other processing element.

In some embodiments, Loader **98***a* may include a plurality of Logic Circuits **250**, Processors **11**, Application Programs **18**, and/or other processing elements. In some aspects, one or more sub-devices, sub-systems, or elements of Loader **98***a* may be controlled by different processing elements. For example, one Processor **11** (i.e. including any Application Programs **18** running thereon, etc.) may control the moving system (i.e. drivetrain, powertrain, etc.) of Loader **98***a*, one Logic Circuit **250** may control an arm of

Loader **98***a*, and an additional Logic Circuit **250** may control a bucket of Loader **98***a*. In some designs where multiple processing elements are utilized, multiple DCADO Units **100** can also be utilized (i.e. one DCADO Unit **100** for each processing element, etc.). In such designs, as User **50** operates Loader **98***a* in circumstances including objects with various properties, a particular DCADO Unit **100** may learn Loader's **98***a* operations in these circumstances by correlating Collections of Object Representations **525** with one or more Instruction Sets **526** used or executed by Logic Circuit **250**, Processor **11**, Application Program **18**, and/or other processing element assigned to the DCADO Unit **100**. The learning and/or decision making in Loader's **98***a* operation can, therefore, be performed per individual processing element. In other designs where multiple processing elements are utilized, as User **50** operates Loader **98***a* in circumstances including objects with various properties, a single DCADO Unit **100** may learn Loader's **98***a* operations in these circumstances by correlating Collections of Object Representations **525** with collective Instruction Sets **526** used or executed by a plurality of Logic Circuits **250**, Processors **11**, Application Programs **18**, and/or other processing elements.

In some embodiments, a combination of DCADO Unit **100** and other systems and/or techniques can be utilized to implement Loader's **98***a* operation. In one example, DCADO Unit **100** may be a primary or preferred system for implementing Loader's **98***a* operation. While operating autonomously under the control of DCADO Unit **100**, Loader **98***a* may encounter a circumstance including objects with various properties that has not been encountered or learned before. In such situations, User **50** and/or non-DCADO system may take control of Loader's **98***a* operation. DCADO Unit **100** may take control again when Loader **98***a* encounters a previously learned circumstance including objects with various properties. Naturally, DCADO Unit **100** can learn Loader's **98***a* operation in the circumstances while User **50** and/or non-DCADO system is in control of Loader **98***a*, thereby reducing or eliminating the need for future involvement of User **50** and/or non-DCADO system. For instance, one User **50** can control or assist in controlling multiple Loaders **98***a* comprising DCADO Units **100**. In such instances, User **50** can control or assist in controlling a Loader **98***a* that may encounter a circumstance including objects with various properties that has not been encountered or learned before while the Loaders **98***a* operating in previously learned circumstances can operate autonomously. In another example, User **50** and/or non-DCADO system may be a primary or preferred system for implementing Loader's **98***a* operation. While operating under the control of User **50** and/or non-DCADO system, User **50** and/or non-DCADO system may release control to DCADO Unit **100** for any reason (i.e. User **50** gets tired or distracted, non-DCADO system gets stuck or cannot make a decision, etc.), at which point Loader **98***a* can be controlled by DCADO Unit **100**. In some designs, DCADO Unit **100** may take control in certain special circumstances including objects with various properties where DCADO Unit **100** may offer superior performance even though User **50** and/or non-DCADO system may generally be preferred. Once Loader **98***a* leaves such special circumstances, DCADO Unit **100** may release control to User **50** and/or non-DCADO system. In general, DCADO Unit **100** can take control from, share control with, or release control to User **50**, non-DCADO system, and/or other system or process at any time, in any circumstances, and remain in control for any period of time as needed.

In some embodiments, DCADO Unit **100** may control one or more sub-devices, sub-systems, or elements of Loader **98***a* while User **50** and/or non-DCADO system may control other one or more sub-devices, sub-systems, or elements of Loader **98***a*. For example, User **50** and/or non-DCADO system may control the moving system (i.e. drivetrain, powertrain, etc.) of Loader **98***a*, while DCADO Unit **100** may control an arm and bucket of Loader **98***a*. Any other combination of controlling various sub-devices, sub-systems, or elements of Loader **98***a* by DCADO Unit **100** and User **50** and/or non-DCADO system can be implemented.

Referring to FIG. **39**, in some exemplary embodiments, Device **98** may be or include Boat **98***b*. Boat **98***b* may be operated by User **50** in person or remotely. Boat **98***b* may include or be coupled to one or more Sensors **92** (i.e. collectively referred to as Sensor **92**, etc.) such as Camera **92***a*, Microphone **92***b*, Lidar **92***c*, Radar **92***d*, Sonar **92***e*, etc. and/or Object Processing Unit **93** that can detect Objects **615***ba*-**615***bd*, and/or other elements or information in Boat's **98***b* surrounding. Object Processing Unit **93** may include Picture Recognizer **94***a*, Sound Recognizer **94***b*, Lidar Processing Unit **94***c*, Radar Processing Unit **94***d*, Sonar Processing Unit **94***e*, and/or other elements or functionalities as applicable. Object Processing Unit **93** may create or generate one or more (i.e. stream, etc.) Collections of Object Representations **525** comprising Object Representations **625**, Object Properties **630**, and/or other elements or information representing Objects **615** detected in Boat's **98***b* surrounding. Boat **98***b* may also include or be controlled by Logic Circuit **250** (i.e. microcontroller, etc.), Processor **11** (i.e. including any Application Program **18** running thereon, etc.), and/or other processing element that receives User's **50** (i.e. operator's, etc.) operating directions and causes desired operations with Boat **98***b* such as moving, maneuvering, and/or other operations. User **50** can interact with Logic Circuit **250**, Processor **11**, Application Program **18**, and/or other processing element through inputting operating directions via Human-machine Interface **23** such as one or more steering wheels, levers, pedals, buttons, or other input devices. For instance, responsive to User's **50** manipulating a steering wheel and one or more levers, Logic Circuit **250** or Processor **11** may cause one or more motors or other actuators to move or maneuver Boat **98***b*. Boat **98***b* may also include or be coupled to DCADO Unit **100**. DCADO Unit **100** may be embedded (i.e. integrated, etc.) into or coupled to Boat's **98***b* Logic Circuit **250**, Processor **11**, and/or other processing element. DCADO Unit **100** may also be a program embedded (i.e. integrated, etc.) into or interfaced with Application Program **18** running on Processor **11** and/or other processing element. DCADO Unit **100** can obtain Instruction Sets **526** used or executed by Logic Circuit **250**, Processor **11**, Application Program **18**, and/or other processing element. In some aspects, Instruction Sets **526** may include one or more inputs into or outputs from Boat's **98***b* Logic Circuit **250** (i.e. microcontroller, etc.). In other aspects, Instruction Sets **526** may include one or more instruction sets from Boat's **98***b* Processor's **11** registers or other components. In further aspects, Instruction Sets **526** may include one or more instruction sets used or executed in Application Program **18**. DCADO Unit **100** may also optionally obtain any Extra Info **527** (i.e. time, location, computed, contextual, and/or other information, etc.) related to Boat's **98***b* operation. As User **50** operates Boat **98***b* in circumstances including objects with various properties as shown, DCADO Unit **100** may learn Boat's **98***b* operations in these circumstances by correlating Collections of Object

Representations **525** representing Objects **615** detected in Boat's **98***b* surrounding with one or more Instruction Sets **526** used or executed by Logic Circuit **250**, Processor **11**, Application Program **18**, and/or other processing element. Any Extra Info **527** related to Boat's **98***b* operation may also optionally be correlated with Collections of Object Representations **525**. DCADO Unit **100** may store this knowledge into Knowledgebase **530** (i.e. Neural Network **530***a*, Graph **530***b*, Collection of Sequences **530***c*, Sequence **533**, Collection of Knowledge Cells **530***d*, etc.). In the future, DCADO Unit **110** may compare incoming Collections of Object Representations **525** representing Objects **615** detected in Boat's **98***b* surrounding with previously learned Collections of Object Representations **525** including optionally using any Extra Info **527** for enhanced decision making. If substantially similar or at least a partial match is found or determined, the Instruction Sets **526** correlated with the previously learned Collections of Object Representations **525** can be autonomously executed by Logic Circuit **250**, Processor **11**, Application Program **18**, and/or other processing element, thereby enabling autonomous operation of Boat **98***b* in similar circumstances as in previously learned ones. For instance, Boat **98***b* comprising DCADO Unit **100** may learn User **50**-directed moving, maneuvering, and/or other operations in a circumstance that includes Fishing Boat **615***ba*, Lighthouse **615***bb*, Sailboat **615***bc*, Cruise Ship **615***bd*, and/or other Objects **615** among which Boat **98***b* may need to maneuver. In the future, when a circumstance that includes Objects **615** with similar Object Properties **630** is encountered, Boat **98***b* may implement moving, maneuvering, and/or other operations autonomously. In some aspects, the shore (not enumerated) or any part thereof (i.e. cliff, ridge, beach, etc.) may be detected as an Object **615** itself, which may then be learned and used in autonomous operation of Boat **98***b*.

Referring to FIG. **40**, in some exemplary embodiments, an Area of Interest **450** can be utilized. In one example, Area of Interest **450** may include a radial, circular, elliptical, or other such area around Boat **98***b*. In another example, Area of Interest **450** may include a triangular, rectangular, octagonal, or other such area around Boat **98***b*. In a further example, Area of Interest **450** may include a spherical, cubical, pyramid-like, or other such area around Boat **98***b* as applicable to 3D space. Any other Area of Interest **450** shape can be utilized depending on implementation. The shape and/or size of Area of Interest **450** can be defined by a user, by DCADO system administrator, or automatically by the system based on experience, testing, inquiry, analysis, synthesis, or other techniques, knowledge, or input. Utilizing Area of Interest **450** enables DCADO Unit **100** to focus on Boat's **98***b* immediate surrounding, thereby avoiding extraneous detail in the rest of the surrounding. In some aspects, Area of Interest **450** can be subdivided into sub-areas (i.e. sub-circles, sub-rectangles, sub-spheres, etc.). Sub-areas can be used to classify the surrounding by distance from Boat **98***b*. For example, the surrounding closer to Boat **98***b* may be more important and may be assigned higher importance index or weight. As User **50** operates Boat **98***b* in circumstances including objects with various properties as shown, DCADO Unit **100** may learn Boat's **98***b* operations in these circumstances by correlating Collections of Object Representations **525** representing Objects **615** detected in Area of Interest **450** around Boat **98***b* with one or more Instruction Sets **526** used or executed by Logic Circuit **250**, Processor **11**, Application Program **18**, and/or other processing element. Any Extra Info **527** related to Boat's **98***b* operation may also optionally be correlated with Collections of Object Representations **525**. DCADO Unit **100** may store this knowledge into Knowledgebase **530** (i.e. Neural Network **530***a*, Graph **530***b*, Collection of Sequences **530***c*, Sequence **533**, Collection of Knowledge Cells **530***d*, etc.). In the future, DCADO Unit **110** may compare incoming Collections of Object Representations **525** representing Objects **615** detected in Area of Interest **450** around Boat **98***b* with previously learned Collections of Object Representations **525** including optionally using any Extra Info **527** for enhanced decision making. If substantially similar or at least a partial match is found or determined, the Instruction Sets **526** correlated with the previously learned Collections of Object Representations **525** can be autonomously executed by Logic Circuit **250**, Processor **11**, Application Program **18**, and/or other processing element, thereby enabling autonomous operation of Boat **98***b* in similar Areas of Interest **450** as in previously learned ones. For instance, Boat **98***b* comprising DCADO Unit **100** may learn User **50**-directed moving, maneuvering, and/or other operations in an Area of Interest **450** that includes Fishing Boat **615***ba*, Lighthouse **615***bb*, Cruise Ship **615***bd*, and/or other Objects **615** among which Boat **98***b* may need to maneuver. In the future, when an Area of Interest **450** that includes Objects **615** with similar Object Properties **630** is encountered, Boat **98***b* may implement moving, maneuvering, and/or other operations autonomously.

The features, functionalities, and embodiments described with respect to Loader **98***a* and Boat **98***b* can be implemented in any situation where Device **98** may need to autonomously maneuver among, interact with, or perform other operations relative to objects in its surrounding. Therefore, the features, functionalities, and embodiments described with respect to Loader **98***a* and Boat **98***b* can similarly be implemented on any computing enabled machine such as a bulldozer, an excavator, a crane, a forklift, a truck, a construction machine, an assembly machine, an object handling machine, an object dispensing machine, a sorting machine, a restocking machine, an industrial machine, an agricultural machine, a harvesting machine, a building control system, a home or other appliance, a toy, a robot, a tank, an aircraft, a vessel, a submarine, a ground vehicle, an aerial vehicle, an aquatic vehicle, and/or other computing-enabled machine or system.

In yet some exemplary embodiments, Device **98** may be or include a control device such as a thermostat, control panel, remote or other controller, and/or other control device. For instance, a thermostat comprising DCADO Unit **100** may learn User's **50** setting temperature of an air conditioning system controlled by the thermostat in a circumstance that includes User **50** and/or other persons entering or being present in a room. In the future, when a circumstance that includes User **50** and/or other persons entering or being present in the room is encountered, thermostat may implement setting temperature of the air conditioning system autonomously. In some aspects, a control device may be included in the device being controlled (i.e. control panel of an oven, refrigerator, fixture, etc.). In other aspects, a control device may be separate from the device being controlled (i.e. remote controller of a television device, etc.). In yet further exemplary embodiments, Device **98** may be or include a mobile computer such as a smartphone, tablet, and/or other mobile computer. For instance, a smartphone comprising DCADO Unit **100** may learn User **50**-directed playing a music file, setting a vibrate mode, and/or other operations in a circumstance that includes objects with various properties. In the future, when a circumstance that includes objects with similar properties is

encountered, smartphone may implement playing music file, setting vibrate mode, and/or other operations autonomously. In general, Device **98** may be or include any movable, stationary, or other device. One of ordinary skill in art will understand that Device **98** may be or include any device that can implement and/or benefit from the functionalities described herein.

It must be noted that as used herein and in the appended claims, the singular forms "a", "an", and "the" include plural referents unless the context clearly dictates otherwise.

A number of embodiments have been described herein. While this disclosure contains many specific implementation details, these should not be construed as limitations on the scope of the disclosure or of what may be claimed, but rather as descriptions of features specific to particular embodiments. It should be understood that various modifications can be made without departing from the spirit and scope of the disclosure. The logic flows depicted in the figures do not require the particular order shown, or sequential order, to achieve desirable results. In addition, other or additional steps, elements, or connections can be included, or some of the steps, elements, or connections can be eliminated, or a combination thereof can be utilized in the described flows, illustrations, or descriptions. Further, the various aspects of the disclosed devices, apparatuses, systems, and/or methods can be combined in whole or in part with each other to produce additional implementations. Moreover, separation of various components in the embodiments described herein should not be understood as requiring such separation in all embodiments, and it should be understood that the described components can generally be integrated together in a single product or packaged into multiple products. Accordingly, other embodiments are within the scope of the following claims.

The invention claimed is:

1. A method implemented using a computing system that includes one or more processor circuits, the method comprising:

accessing a memory that stores at least a knowledgebase that includes: a first correlation including a first circumstance representation correlated with a first one or more instruction sets for operating a first device and a second correlation including a second circumstance representation correlated with a second one or more instruction sets for operating the first device, wherein the first circumstance representation represents a first circumstance detected at least in part by one or more sensors of the first device and the second circumstance representation represents a second circumstance detected at least in part by the one or more sensors of the first device, and wherein at least a portion of the first correlation and at least a portion of the second correlation are learned in a learning process that includes operating the first device at least partially by a user;

generating or receiving a third circumstance representation, wherein the third circumstance representation represents a third circumstance detected at least in part by the one or more sensors of the first device or at least in part by one or more sensors of a second device;

anticipating the first one or more instruction sets for operating the first device learned in the learning process based on at least partial match between the third circumstance representation and the first circumstance representation; and

at least in response to the anticipating, executing the first one or more instruction sets for operating the first device learned in the learning process, wherein the first device or the second device autonomously performs one or more operations defined by the first one or more instruction sets for operating the first device learned in the learning process.

2. The method of claim **1**, wherein the knowledgebase further includes: a first knowledge cell and a second knowledge cell, and wherein the first knowledge cell includes the first correlation and the second knowledge cell includes the second correlation.

3. The method of claim **1**, wherein the learning process includes: creating, inserting, deleting, modifying, or manipulating an element of the first correlation, or creating, inserting, deleting, modifying, or manipulating an element of the second correlation.

4. The method of claim **1**, wherein the learning process includes:

generating or receiving the first circumstance representation, and generating or receiving the second circumstance representation; and

obtaining or receiving the first one or more instruction sets for operating the first device, and obtaining or receiving the second one or more instruction sets for operating the first device, and wherein the knowledgebase further includes a fourth correlation including a fourth circumstance representation correlated with a fourth one or more instruction sets for operating the second device, and wherein the fourth circumstance representation represents a fourth circumstance detected at least in part by the one or more sensors of the second device, and wherein at least a portion of the fourth correlation is learned in another learning process that includes:

generating or receiving the fourth circumstance representation; and

obtaining or receiving the fourth one or more instruction sets for operating the second device.

5. The method of claim **1**, wherein the anticipating the first one or more instruction sets for operating the first device learned in the learning process based on the at least partial match between the third circumstance representation and the first circumstance representation includes:

determining that a number of at least partially matching portions of the third circumstance representation and portions of the first circumstance representation exceeds a threshold number, or

determining that a percentage of at least partially matching portions of the third circumstance representation and portions of the first circumstance representation exceeds a threshold percentage.

6. The method of claim **1**, wherein the at least the portion of the first correlation and the at least the portion of the second correlation are learned in the learning process while the user operates the first device, and wherein the one or more operations defined by the first one or more instruction sets for operating the first device learned in the learning process correspond to the user's methodology of operating the first device learned in the learning process.

7. The method of claim **1**, wherein the knowledgebase further includes a fourth correlation including a fourth circumstance representation correlated with a fourth one or more instruction sets for operating: the first device, the second device, or a third device, and wherein a first connection is generated to connect the first correlation with the second correlation, and wherein a second connection is generated to connect the second correlation with the fourth correlation.

8. The method of claim 1, further comprising:

modifying the first one or more instruction sets for operating the first device learned in the learning process or a copy of the first one or more instruction sets for operating the first device learned in the learning process, and wherein the executing the first one or more instruction sets for operating the first device learned in the learning process includes executing the modified the first one or more instruction sets for operating the first device learned in the learning process or the modified the copy of the first one or more instruction sets for operating the first device learned in the learning process, and wherein the performing, by the first device or by the second device, the one or more operations defined by the first one or more instruction sets for operating the first device learned in the learning process includes performing, by the first device or by the second device, one or more operations defined by the modified the first one or more instruction sets for operating the first device learned in the learning process or by the modified the copy of the first one or more instruction sets for operating the first device learned in the learning process.

9. The method of claim 1, wherein the knowledgebase further includes a fourth correlation including a fourth circumstance representation correlated with a fourth one or more instruction sets for operating the first device, and wherein the fourth circumstance representation represents a fourth circumstance detected at least in part by the one or more sensors of the first device, and wherein at least a portion of the fourth correlation is learned in another learning process that includes operating the first device at least partially by the user.

10. The method of claim 1, wherein the knowledgebase further includes a fourth correlation including a fourth circumstance representation correlated with a fourth one or more instruction sets for operating the first device, and wherein the fourth circumstance representation represents a fourth circumstance detected at least in part by the one or more sensors of the first device, and wherein at least a portion of the fourth correlation is learned in another learning process that includes operating the first device at least partially by another user.

11. The method of claim 1, wherein the knowledgebase further includes a fourth correlation including a fourth circumstance representation correlated with a fourth one or more instruction sets for operating the second device, and wherein the fourth circumstance representation represents a fourth circumstance detected at least in part by the one or more sensors of the second device, and wherein at least a portion of the fourth correlation is learned in another learning process that includes operating the second device at least partially by another user.

12. The method of claim 1, wherein the first circumstance includes one or more objects detected at least in part by the one or more sensors of the first device at a first time or during a first time period, and wherein the second circumstance includes one or more objects detected at least in part by the one or more sensors of the first device at a second time or during a second time period, and wherein the third circumstance includes:

one or more objects detected at least in part by the one or more sensors of the first device at a third time or during a third time period, or

one or more objects detected at least in part by the one or more sensors of the second device at a third time or during a third time period.

13. The method of claim 1, wherein the first circumstance representation is a data structure including one or more data about the first circumstance of the first device, and wherein the second circumstance representation is a data structure including one or more data about the second circumstance of the first device, and wherein the third circumstance representation is a data structure including one or more data about: the third circumstance of the first device, or the third circumstance of the second device.

14. The method of claim 1, wherein the first circumstance representation includes: one or more object representations, or one or more collections of object representations, and wherein the second circumstance representation includes: one or more object representations, or one or more collections of object representations, and wherein the third circumstance representation includes: one or more object representations, or one or more collections of object representations.

15. The method of claim 1, wherein, to correlate the first circumstance representation with the first one or more instruction sets for operating the first device, a determination is made that the first one or more instruction sets for operating the first device temporally correspond to the first circumstance representation, and wherein the first circumstance representation includes: one or more object representations, or one or more collections of object representations.

16. The method of claim 1, wherein the anticipating the first one or more instruction sets for operating the first device learned in the learning process based on the at least partial match between the third circumstance representation and the first circumstance representation includes determining the first one or more instruction sets for operating the first device learned in the learning process based on the at least partial match between the third circumstance representation and the first circumstance representation.

17. The method of claim 1, wherein elements of the computing system are included in: a single device, or multiple devices, and wherein the one or more processor circuits include: one or more microcontrollers, one or more computing circuits, or one or more electronic circuits, and wherein the memory includes: a volatile memory, or a non-volatile memory, and wherein the first device includes: a robot, a vehicle, an appliance, an electronic device, or a mechanical machine, and wherein the second device includes: a robot, a vehicle, an appliance, an electronic device, or a mechanical machine, and wherein an instruction set of the first one or more instruction sets for operating the first device includes at least one selected from the group comprising: only one instruction, a plurality of instructions, one or more inputs, one or more commands, one or more computer commands, one or more keywords, one or more symbols, one or more operators, one or more variables, one or more values, one or more objects or object references, one or more data structures or data structure references, one or more functions or function references, one or more parameters, one or more signals, one or more characters, one or more digits, one or more user operating directions, one or more user directions, one or more user inputs, one or more representations of one or more user actions, one or more representations of one or more user clicks, one or more binary bits, one or more assembly language commands, one or more states, one or more codes, one or more data, and one or more information, and wherein an instruction set of the second one or more instruction sets for operating the first device includes at least one selected from the group comprising: only one instruction, a plurality of instructions, one or more inputs, one or more commands, one or more

computer commands, one or more keywords, one or more symbols, one or more operators, one or more variables, one or more values, one or more objects or object references, one or more data structures or data structure references, one or more functions or function references, one or more parameters, one or more signals, one or more characters, one or more digits, one or more user operating directions, one or more user directions, one or more user inputs, one or more representations of one or more user actions, one or more representations of one or more user clicks, one or more binary bits, one or more assembly language commands, one or more states, one or more codes, one or more data, and one or more information, and wherein the one or more sensors of the first device include at least one selected from the group comprising: one or more cameras, one or more microphones, one or more radars, one or more lidars, one or more sonars, and one or more apparatuses for detecting objects or object properties, and wherein the one or more sensors of the second device include at least one selected from the group comprising: one or more cameras, one or more microphones, one or more radars, one or more lidars, one or more sonars, and one or more apparatuses for detecting objects or object properties, and wherein the at least the portion of the first correlation includes: one portion of the first correlation, multiple portions of the first correlation, all portions of the first correlation, or the entire first correlation, and wherein the at least the portion of the second correlation includes: one portion of the second correlation, multiple portions of the second correlation, all portions of the second correlation, or the entire second correlation, and wherein an object of the first circumstance is the same as an object of the third circumstance, or multiple objects of the first circumstance are the same as multiple objects of the third circumstance, or all objects of the first circumstance are the same as all objects of the third circumstance, or all objects of the first circumstance are different than all objects of the third circumstance.

18. One or more non-transitory machine readable media storing machine readable code that when executed by one or more processor circuits causes the one or more processor circuits to perform at least:

accessing a memory that stores at least a knowledgebase that includes: a first correlation including a first circumstance representation correlated with a first one or more instruction sets for operating a first device and a second correlation including a second circumstance representation correlated with a second one or more instruction sets for operating the first device, wherein the first circumstance representation represents a first circumstance detected at least in part by one or more sensors of the first device and the second circumstance representation represents a second circumstance detected at least in part by the one or more sensors of the first device, and wherein at least a portion of the first correlation and at least a portion of the second correlation are learned in a learning process that includes operating the first device at least partially by a user;

generating or receiving a third circumstance representation, wherein the third circumstance representation represents a third circumstance detected at least in part by the one or more sensors of the first device or at least in part by one or more sensors of a second device;

anticipating the first one or more instruction sets for operating the first device learned in the learning process based on at least partial match between the third circumstance representation and the first circumstance representation; and

at least in response to the anticipating, causing the first device or the second device to perform one or more operations defined by the first one or more instruction sets for operating the first device learned in the learning process at least by causing the one or more processor circuits or another one or more processor circuits to execute the first one or more instruction sets for operating the first device learned in the learning process.

19. A system comprising:

a memory that stores at least a knowledgebase that includes: a first correlation including a first circumstance representation correlated with a first one or more instruction sets for operating a first device and a second correlation including a second circumstance representation correlated with a second one or more instruction sets for operating the first device, wherein the first circumstance representation represents a first circumstance detected at least in part by one or more sensors of the first device and the second circumstance representation represents a second circumstance detected at least in part by the one or more sensors of the first device, and wherein at least a portion of the first correlation and at least a portion of the second correlation are learned in a learning process that includes operating the first device at least partially by a user;

means for generating or receiving a third circumstance representation, wherein the third circumstance representation represents a third circumstance detected at least in part by the one or more sensors of the first device or at least in part by one or more sensors of a second device;

means for anticipating the first one or more instruction sets for operating the first device learned in the learning process based on at least partial match between the third circumstance representation and the first circumstance representation; and

means for executing, at least in response to the anticipating, the first one or more instruction sets for operating the first device learned in the learning process, wherein the first device or the second device autonomously.

20. The system of claim **19**, wherein the means for generating or receiving the third circumstance representation includes one or more processor circuits, and wherein the means for anticipating the first one or more instruction sets for operating the first device learned in the learning process based on the at least partial match between the third circumstance representation and the first circumstance representation includes one or more processor circuits, and wherein the means for executing, at least in response to the anticipating, the first one or more instruction sets for operating the first device learned in the learning process includes one or more processor circuits.

* * * * *