Trials@uspto.gov
571-272-7822

Paper 12
Entered: January 22, 2024

UNITED STATES PATENT AND TRADEMARK OFFICE

BEFORE THE PATENT TRIAL AND APPEAL BOARD

SMA SOLAR TECHNOLOGY AMERICA, LLC,
Petitioner,

v.

TIGO ENERGY, INC.,
Patent Owner.

IPR2023-01175
Patent 9,966,848 B2

Before KRISTINA M. KALAN, ELIZABETH M. ROESEL, and JULIA HEANEY, *Administrative Patent Judges.*

KALAN, *Administrative Patent Judge*.

DECISION
Denying Institution of *Inter Partes* Review
35 U.S.C. § 314

I. INTRODUCTION

SMA Solar Technology America, LLC ("Petitioner") filed a Petition requesting *inter partes* review of claims 1–20 of U.S. Patent No. 9,966,848 B2 (Ex. 1001, "the '848 patent"). Paper 1 ("Pet."). Tigo Energy, Inc. ("Patent Owner") filed a Preliminary Response. Paper 8 ("Prelim. Resp.").

To institute *inter partes* review, we must determine that the information presented in the Petition shows "there is a reasonable likelihood that the petitioner would prevail with respect to at least 1 of the claims challenged in the petition." 35 U.S.C. § 314(a). Upon considering the parties' submissions and the evidence of record, we determine that Petitioner has not shown a reasonable likelihood that it would prevail in showing the unpatentability of at least one of the claims challenged in the Petition. Accordingly, we decline to institute *inter partes* review.

A. Related Matters

The parties identify the following district court litigation as a related matter: *Tigo Energy Inc. v. SMA Solar Technology America LLC*, 22-915-VAC (D. Del.). Pet. 4; Paper 4, 2 (Patent Owner's Mandatory Notices).

Patent Owner identifies two related *inter partes* reviews requested by Petitioner: IPR2023-00879 challenging claims of U.S. Patent No. 9,584,021 B2; and IPR2023-01133 challenging claims of U.S. Patent No. 10,333,405 B2. Paper 4, 2.

B. Real Party-in-Interest

Petitioner states that the "real party-in-interest is Petitioner SMA Solar Technology America, LLC." Pet. 4. Patent Owner "identifies Tigo Energy, Inc. as the real party-in-interest." Paper 4, 2.

C. The '848 Patent (Ex. 1001)

The '848 patent is titled "Systems and Methods for Enhanced Efficiency Auxiliary Power Supply Module." Ex. 1001, code (54). The '848 patent relates to "enhancing the efficiency for auxiliary power supply modules used in photovoltaic systems." *Id.* at 1:26–29. The '848 patent explains:

> One of the problematic aspects of operating a controller in a solar power environment is the unreliability of the power source during the early morning hours as well as during late evening hours, when faint blue light allows the panel to generate a high voltage, but presents barely enough current to properly operate. As a result, circuits often create a " false start " in which the voltages appear to be there, but as soon as the controller becomes active there is a drop or brown out or power outage, leading to the undesirable occurrence of unstable or even meta-stable modes, which may occur more frequently for small processors.

Id. at 8:8–18.

The '848 patent addresses this problem by providing a circuit with control logic to ensure that the solar power is strong enough to power the micro-controller for the solar panel. *See id.* at 8:19–36. More specifically, the '848 patent describes a circuit that addresses the "false start problem" by incorporating a preload resistor that emulates the load necessary to power the micro-controller. *Id.* If the output is adequate to power the micro-controller, the preload resistor is disconnected and the output is connected to the micro-controller. *Id.*

D. Challenged Claims

Claims 1, 10, and 19 are independent. Claim 1 is reproduced below.

1. [1A] An apparatus, comprising:

[1B] a first stage power converter to generate a first output from a direct current input;

[1C] a second stage power converter connected to the first stage power converter to convert the first output to a second output;

[1D] a micro-controller;

[1E] a power absorption circuit; and

[1F] a control circuit coupled with the first stage power converter and the second stage power converter, the control circuit powered by the first output to control the second stage power converter,

[1G] wherein: when the second stage power converter is in a first mode of not providing the second output to power the micro-controller, the control circuit monitors a voltage of the first output powering the power absorption circuit and signals the second stage power converter to remain in the first mode during a time period in which the voltage is below a threshold; and

[1H] when the voltage is above the threshold, the control circuit signals the second stage power converter to enter a second mode of providing the second output to power the micro-controller.

Ex. 1001, 11:5–28 (bracketed designations added by Petitioner).

E. Asserted Grounds of Unpatentability

Petitioner asserts the following grounds:

Claims Challenged	35 U.S.C. §[1]	Reference(s)/Basis
1, 4, 5, 7–10, 13, 14, 16–18	102	Mieth[2]
1, 4, 5, 7–10, 13, 14, 16–20	103	Mieth, Balogh[3]
2, 3, 6, 11, 12, 15	103	Mieth, Balogh, Liu[4]

Petitioner relies on the declaration of Douglas Holberg, Ph.D. in support of its arguments. Ex. 1007.

II. ANALYSIS

A. Claim Construction

We apply the claim construction standard articulated in *Phillips v. AWH Corp.*, 415 F.3d 1303 (Fed. Cir. 2005). 37 C.F.R. § 42.100(b). Under *Phillips*, claim terms are afforded "their ordinary and customary meaning." *Phillips*, 415 F.3d at 1312. The "ordinary and customary meaning of a claim term is the meaning that the term would have to a person of ordinary skill in the art in question at the time of the invention." *Id.* at 1313. "The Board is required to construe 'only those terms . . . that are in controversy, and only to the extent necessary to resolve the controversy.'" *Realtime Data, LLC v. Iancu*, 912 F.3d 1368, 1375 (Fed. Cir. 2019) (quoting *Vivid Techs., Inc. v. Am. Sci. & Eng'g, Inc.*, 200 F.3d 795, 803 (Fed. Cir. 1999)).

---

[1] The Leahy-Smith America Invents Act, Pub. L. No. 112-29, 125 Stat. 284 (2011) ("AIA"), amended 35 U.S.C. §§ 102 and 103 effective March 16, 2013. Because the '848 patent has an effective filing date before the effective date of the applicable AIA amendments, we refer to the pre-AIA versions of §§ 102 and 103.

[2] DE 37 25 476 A1, published February 9, 1989 (Ex. 1008). The certified translation is Ex. 1002.

[3] US 6,246,592 B1, issued June 12, 2001 (Ex. 1003).

[4] US 6,798,177 B1, issued September 28, 2004 (Ex. 1005).

Petitioner proposes that the terms "first stage power converter" and "second stage power converter" mean "'one or more circuit components' that operate alone or together to provide the specified function set forth in the claim." Pet. 19–20. Petitioner proposes interpreting the term "stable," recited by independent claim 19, "to mean that a voltage output reaches an upper threshold of a hysteresis window (*e.g.,* of a comparator) for a period of time." *Id.* at 20 (citing Ex. 1007 ¶ 208).[5]

Patent Owner "submits that the Board need not construe any claim terms." Prelim. Resp. 5. Although Patent Owner argues that Petitioner "failed to analyze the relevant prosecution history to determine the meaning of the terms 'first stage power converter' and 'second stage power converter,'" Patent Owner does not propose any express claim construction for these terms, or any other term. *Id.* at 6–7.

We determine that, for purposes of this Decision, no term requires express construction. *See, e.g.*, *Vivid Techs.*, 200 F.3d at 803.

B. Level of Ordinary Skill in the Art

Petitioner contends that a person of ordinary skill in the art "would have had a bachelor's degree in electrical engineering, or a similar discipline and at least two years of design experience with circuit design." Pet. 20 (citing Ex. 1007 ¶ 31). Patent Owner disputes Petitioner's definition because it excludes "individuals with higher education and less experience." Prelim. Resp. 7. However, Patent Owner does not argue that the level of ordinary skill in the art impacts the analysis. *See id.*

[5] Petitioner also argues that "the phrase 'stable for a predetermined period of time' is not defined in the detailed description, and in the context of the claims is indefinite." Pet. 20.

For the purposes of this Decision, we adopt Petitioner's proposal because we find Petitioner's statement of the level of ordinary skill in the art adequate and supported on this record. The level of ordinary skill in the art also appears to be reflected by the prior art of record. *See Okajima v. Bourdeau*, 261 F.3d 1350, 1355 (Fed. Cir. 2001).

C. Principles of Law

To establish anticipation under 35 U.S.C. § 102, each and every element in a claim, arranged as recited in the claim, must be found in a single prior art reference. *Net MoneyIN, Inc. v. VeriSign, Inc.*, 545 F.3d 1359, 1369 (Fed. Cir. 2008). Each element of the challenged claim must be found, either expressly or inherently, in the single prior art reference. *Verdegaal Bros., Inc. v. Union Oil Co. of Cal.*, 814 F.2d 628, 631 (Fed. Cir. 1987). Thus, the dispositive question is whether one skilled in the art would have reasonably understood or inferred from a prior art reference that every claim element is disclosed in that reference. *Eli Lilly & Co. v. L.A. Biomedical Research Inst.*, 849 F.3d 1073, 1074–1075 (Fed. Cir. 2017).

A claim is unpatentable under 35 U.S.C. § 103 if the differences between the subject matter sought to be patented and the prior art are such that the subject matter as a whole would have been obvious at the time the invention was made to a person having ordinary skill in the art to which said subject matter pertains. *KSR Int'l Co. v. Teleflex Inc.*, 550 U.S. 398, 406 (2007). The question of obviousness is resolved on the basis of underlying factual determinations including: (1) the scope and content of the prior art; (2) differences between the claimed subject matter and the prior art; (3) the level of ordinary skill in the art; and (4) if in evidence, objective evidence of

nonobviousness.[6] *Graham v. John Deere Co.*, 383 U.S. 1, 17–18 (1966). A decision on the ground of obviousness must include "articulated reasoning with some rational underpinning to support the legal conclusion of obviousness." *In re Kahn*, 441 F.3d 977, 988 (Fed. Cir. 2006). The obviousness analysis "should be made explicit" and it "can be important to identify a reason that would have prompted a person of ordinary skill in the relevant field to combine the elements in the way the claimed new invention does." *KSR*, 550 U.S. at 418.

D. Asserted Anticipation Ground

Petitioner argues that Mieth anticipates claims 1, 4, 5, 7–10, 13, 14, and 16–18. Pet. 20–53.

1. Mieth (Ex. 1002)[7]

Mieth is a German patent application titled "Circuit arrangement for supplying power to an electrical load from an electrical energy source with fluctuating performance." Ex. 1002, code (54). A solar generator may serve as the energy source with fluctuating performance. *Id.* at 4:29–32. Figure 1 is reproduced below:

[6] Neither party presents any objective evidence of nonobviousness as to any of the challenged claims.
[7] We rely on the certified English translation of Mieth (Ex. 1002).

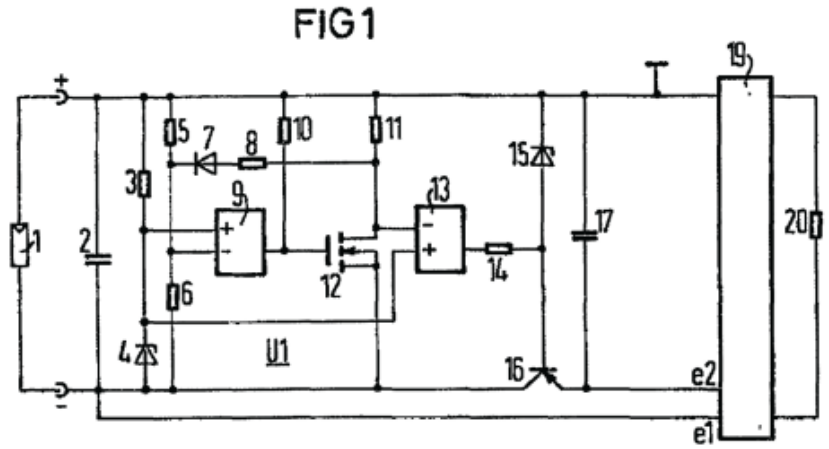

Figure 1 of Mieth is a "circuit arrangement having a starter circuit and auxiliary power supply for a charging converter without electrical isolation." *Id.* at 8:11–13. Figure 1 shows a circuit arrangement for supplying power from solar generator 1 to electrical load 20 through power supply apparatus 19, which is a DC-DC voltage converter or charging converter. *Id.* at 8:20–35. Power supply apparatus 19 is connected to solar generator 1 by way of voltage input e1 and auxiliary voltage input e2, and outputs to electrical load 20. *Id.* The circuit arrangement of Figure 1 includes components that guarantee reliable start-up operation. *Id.* at code (54), 6:1–4, 8:11–13, 8:20–35.

2. Micro-controller

Independent claims 1 and 10 each recites a micro-controller. Petitioner argues that Mieth discloses a micro-controller. More particularly, for claim 1, Petitioner argues that Mieth discloses a circuit that supplies power from solar generator 1 to load 20 through power supply apparatus 19. Pet. 20 (citing Ex. 1002, 8:8–9; Ex. 1007 ¶ 96), 23–24 (citing Ex. 1007 ¶¶ 102–103; Ex. 1007, Fig. 1). Petitioner argues that one of ordinary skill in the art "would understand that a load in a circuit can be or include a micro-controller, as such the load 20 is analogous to the claimed ***micro-controller***

(dashed-orange), as shown in Fig.1(annotated-1D) below." *Id.* at 23 (citing Ex.1007 ¶¶ 102–103; Ex.1014, 1180, Fig.5). Petitioner's annotated Mieth Figure 1 is reproduced below.

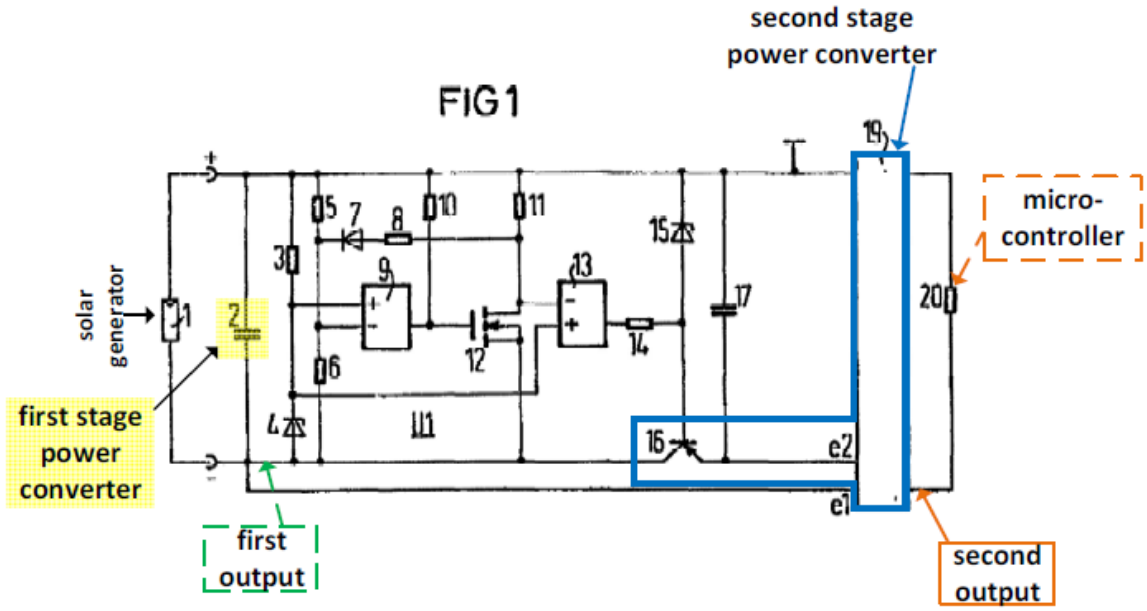

Ex.1002,Fig.1(annotated-1D)

Mieth Figure 1 shows a circuit, which Petitioner annotates to identify solar generator 1, first stage power converter 2 (yellow), and second stage power converter 19. *Id.* at 24. According to Petitioner, first stage power converter 2 provides a first output (dashed green) to second stage power converter 19, which provides a second output (orange) to load 20 ("micro-controller," dashed orange). *Id.*

For claim 10's recitation of a micro-controller, Petitioner presents essentially the same contentions as for claim 1. *Id.* at 50. Petitioner asserts that Mieth's "power supply apparatus 19 (second stage power converter) is coupled to a load 20 (micro-controller) and provides a second output to the micro-controller, which is the same as the claimed ***second stage power converter is coupled to a micro-controller***." *Id.*

Patent Owner disagrees, arguing that Petitioner fails to show Mieth discloses the claimed micro-controller either expressly or inherently, and, thus, fails to meet the requirements for anticipation. Prelim. Resp. 7–12. Patent Owner argues that Petitioner "admits that Mieth does not expressly disclose a 'micro-controller'" but "acknowledges that 'load' could be a micro-controller," and "also admits that the 'load' could be other things." *Id*. at 8 (citing Pet. 23). Thus, Patent Owner argues, Petitioner cannot show that Mieth expressly discloses a micro-controller, and "can only prevail on its anticipation grounds if Mieth's 'load 20' inherently discloses a micro-controller"—Patent Owner asserts that "Petitioner concedes that it does not." *Id.*

Regarding inherent anticipation, Patent Owner argues: "By stating the load 20 'can be' a micro-controller, Petitioner concedes that load 20 is not necessarily a micro-controller." *Id.* at 9 (citing Pet. 23). Patent Owner also contends that Petitioner's argument that "load 20 is analogous to the claimed micro-controller" is insufficient to show that a micro-controller is necessarily present in Mieth. *Id.* Patent Owner reviews Mieth's disclosure and argues that "Mieth's load is never described as being related to a controller, micro-controller or the like, confirming Petitioner's reliance on inherency." *Id.* at 9–11 (citing Ex. 1002, 1:19–21, 1:23–28, 2:1–15, 4:25–27, 8:8–9, 8:20–23, 8:29–33).

After considering the parties' arguments and evidence, we are not persuaded that Petitioner has demonstrated a reasonable likelihood that independent claims 1 and 10 are anticipated by Mieth.

We agree with Patent Owner that Petitioner fails to show Mieth expressly discloses the claimed micro-controller. Petitioner relies on Mieth's load 20 (Pet. 23, 50), but Patent Owner correctly observes that

Mieth does not expressly disclose a micro-controller. Prelim. Resp. 9–11 (citing Ex. 1002, 1:19–21, 1:23–28, 2:1–15, 4:25–27, 8:8–9, 8:20–23, 8:29–33).

We also agree with Patent Owner that Petitioner fails to show Mieth inherently discloses the claimed micro-controller. Petitioner argues that a "PHOSITA would understand that a load in a circuit can be or include a micro-controller" and "the load 20 is analogous to the claimed ***micro-controller***." Pet. 23. Petitioner's argument itself, however, as noted by Patent Owner (Prelim. Resp. 9), admits that load 20 is not "necessarily" a micro-controller, and that load 20 does not "necessarily" include a micro-controller. *Continental Can Co., U.S.A. v. Monsanto Co.*, 948 F.2d 1264, 1268–69 (Fed. Cir. 1991) ("Inherency, however, may not be established by probabilities or possibilities. The mere fact that a certain thing *may* result from a given set of circumstances is not sufficient."); *see also* Pet. 50 (discussing, in the context of claim limitation [10E], "load 20 (micro-controller))" (citing Ex. 1007 ¶ 163).

Additionally, Petitioner argues that Mieth's load 20 is "analogous to" the claimed micro-controller. Pet. 23 (citing Ex. 1007 ¶¶ 102–103 ("A PHOSITA understands that the load 20 is a generic term, and can be or include a micro-controller."); Ex. 1014, 1180, Fig. 5). We are not persuaded that Petitioner's "analogous to" argument comports with the standard for anticipation. Under the applicable standard for anticipation, neither Petitioner nor its declarant provides any analysis that would show that one skilled in the art would have reasonably understood or inferred from Mieth that load 20 is a micro-controller. *See Eli Lilly*, 849 F.3d at 1074–1075. Dr. Holberg testifies that "the load 20 is analogous to the claimed micro-controller (dashed-orange) as both the load 20 draws power from the second

output and the micro-controller of the '848 patent draws power from the second output." Ex. 1007 ¶ 103. Dr. Holberg's testimony is not persuasive to show that Mieth's load 20 teaches a micro-controller. Merely because a load draws power from a particular source is not enough to establish that the load would have been reasonably understood as a micro-controller.

For the foregoing reasons, Petitioner has not established a reasonable likelihood of prevailing in showing anticipation of claims 1, 4, 5, 7–10, 13, 14, and 16–18 by Mieth.

E. Asserted Obviousness Grounds

Petitioner argues that claims 1, 4, 5, 7–10, 13, 14, and 16–20 would have been obvious in view of Mieth and Balogh, and that claims 2, 3, 6, 11, 12, and 15 would have been obvious in view of Mieth and Liu, or Mieth, Balogh, and Liu. Pet. 53–85. Patent Owner disagrees, arguing that neither Balogh nor Liu cures the micro-controller deficiency of Petitioner's anticipation ground. Prelim. Resp. 12–14. We agree with Patent Owner.

For the "micro-controller" limitation of independent claims 1, 10, and 19, Petitioner relies on the same argument and evidence for its obviousness grounds as it presents for its anticipation ground. Referring back to its anticipation argument, Petitioner asserts: "As discussed in §VII.A.1 Mieth discloses claim 1. As discussed in §VII.B.1.i, Mieth in combination with Balogh disclose feature [1B], thus Mieth-Balogh also teach all the elements [1A]-[1H] of claim 1." Pet. 60; *see also id.* at 61 ("As discussed in §VII.A.7 Mieth discloses claim 10. As discussed in §VII.B.2.i, Mieth in combination with Balogh discloses feature [10B], thus Mieth-Balogh also teach all the elements [10A]-[10H] of claim 10.").

For the "micro-controller" limitation of independent claim 19, Petitioner asserts: "A PHOSITA would understand that a load in a circuit

can be or include a micro-controller, as such, the load 20 is analogous to the claimed ***micro-controller***." *Id.* at 66–67 (citing Ex. 1007 ¶¶ 200–201 ("The load 20 of Mieth receives the output of the power supply apparatus 19. . . . A PHOSITA would understand that a load in a circuit can be or include a micro-controller, as such, the load 20 is analogous to the claimed micro-controller.")). This is essentially the same reasoning Petitioner and Dr. Holberg present for "a micro-controller" under the anticipation ground. Pet. 23–24; Ex. 1007 ¶¶ 102–103.

Petitioner's obviousness grounds do not cure the deficiency in Petitioner's argument and evidence about whether Mieth discloses the claimed micro-controller. As discussed above, Petitioner has not demonstrated that Mieth expressly or inherently discloses the "micro-controller" limitation under an anticipation standard. Here, in its obviousness grounds, Petitioner relies on the same reasoning as it presents for anticipation and has not provided any argument or evidence as to why Mieth might disclose or suggest the claimed micro-controller under an obviousness standard. For example, Petitioner and its declarant provide no reasoning to support their conclusory assertion that Mieth's load 20 "can be or include a micro-controller." Pet. 23–24; Ex. 1007 ¶¶ 102–103. Nor do Petitioner's arguments present any reasoning as to why Balogh, or Mieth-Balogh, might disclose or suggest the claimed micro-controller. On this record, Petitioner's obviousness arguments fail to meet Petitioner's burden of demonstrating that the prior art discloses or suggests the claimed micro-controller. For the foregoing reasons, Petitioner has not established a reasonable likelihood of prevailing in showing obviousness of claims 1, 4, 5, 7–10, 13, 14, and 16–20 by Mieth and Balogh.

For dependent claims 3 and 6, Petitioner labels Liu's power amplifier ("PA") 68 as a "micro-controller" and argues that while "Liu shows PA 68 powered by reservoir capacitor 58 through the second stage power converter 60, a PHOSITA understands that reservoir capacitor 58 and output stage 60 could power another load (as opposed to the PA 68) such as the claimed ***micro-controller***." Pet. 74 (relying on annotated Liu Figure 5), 76 (citing Ex. 1007 ¶ 224), 82 (citing Ex. 1007 ¶¶ 237–238). This argument and cited evidence, however, fail to establish that Liu discloses the claimed micro-controller, or to explain why one of ordinary skill in the art would understand that proposed Mieth-Balogh-Liu combination could include "another load," more particularly, the claimed micro-controller instead of Liu's PA 68 or Mieth's load 20. Moreover, Petitioner maintains that, in the Mieth-Balogh-Liu combination, the "capacitor of Liu powers load 20 (*i.e.,* micro-controller) [of Mieth]" (Pet. 77, 83), which reiterates Petitioner's reliance on Mieth's load 20 to disclose the claimed micro-controller, and fails to explain if or how one of ordinary skill in the art would have been motivated to use Liu's PA 68 in the proposed combination.

None of Petitioner's arguments for claims 2, 3, 6, 11, 12, and 15 cure the deficiency in its argument as to the micro-controller limitation. For the reasons given above, Petitioner has not established a reasonable likelihood of showing obviousness of claims 2, 3, 6, 11, 12, and 15 over Mieth and Liu, or over Mieth, Balogh, and Liu.

III. CONCLUSION

For the reasons set forth above, we deny the Petition and do not institute *inter partes* review.

IV. ORDER

In consideration of the foregoing, it is hereby:

ORDERED that the Petition is *denied* and no *inter partes* review is instituted.

FOR PETITIONER:

Thomas Eschweiler
Nathanael Smith
ESCHWEILER & POTASHNIK LLC
docketing@eschweilerlaw.com
njsmith@epiplaw.com

Philip Marsh
ARNOLD & PORTER KAYE SCHOLER LLP
philip.marsh@apks.com

FOR PATENT OWNER:

Heath Briggs
Leif Olson
GREENBERG TRAURIG, LLP
briggsh@gtlaw.com
olsonl@gtlaw.com