IN THE UNITED STATES PATENT AND TRADEMARK OFFICE

In re Patent of:	Petit *et al*.	
U.S. Patent No.:	8,326,611	Attorney Docket No.: 50095-0094IP2
Issue Date:	December 4, 2012	
Appl. Serial No.:	12/606,140	
Filing Date:	October 26, 2009	
Title:	ACOUSTIC VOICE ACTIVITY DETECTION (AVAD) FOR ELECTRONIC SYSTEMS	

DECLARATION OF DR. THOMAS W. KENNY

Declaration

I hereby declare that all statements made of my own knowledge are true and that all statements made on information and belief are believed to be true. I further declare that these statements were made with the knowledge that willful false statements and the like so made are punishable by fine or imprisonment, or both, under Section 1001 of the Title 18 of the United States Code.

Dated: August 31, 2022 By: _____

Thomas W. Kenny, Ph.D.

TABLE OF CONTENTS

I. QUALIFICATIONS AND BACKGROUND INFORMATION 4

II. OVERVIEW OF THE CONCLUSION FORMED 12

III. LEVEL OF ORDINARY SKILL IN THE ART 12

IV. LEGAL STANDARDS 13

- A. Terminology 13
- B. Legal Standards for Anticipation 14
- C. Legal Standards for Obviousness 15

V. THE ’611 PATENT 20

- A. Overview of the ’611 Patent 20
- B. Prosecution History of the ’611 Patent 24

VI. SUMMARY OF THE PRIOR ART 24

- A. Overview of Avendano ’880 24
- B. Overview of Hou 33
- C. Overview of Avendano ’252 36

VII. GROUND 1: CLAIMS 29-31, 33-37, AND 41-44 ARE RENDERED OBVIOUS BY AVENDANO ’880 IN VIEW OF HOU 42

- A. Combination of Avendano ’880 and Hou 42
- B. Claim 29 58
- C. Claim 30 76
- D. Claim 31 78
- E. Claim 33 80
- F. Claim 34 87
- G. Claim 35 88
- H. Claim 36 89
- I. Claim 37 92
- J. Claim 41 92
- K. Claim 42 94
- L. Claim 43 96
- M. Claim 44 96

VIII. GROUND 2: CLAIMS 32 AND 38-40 ARE RENDERED OBVIOUS BY AVENDANO '880 IN VIEW OF HOU AND AVENDANO ’252 98

- A. Combination of Avendano ’880, Hou, and Avendano ’252 98
- B. Claim 32 100

C. Claim 38 108
D. Claim 39 110
E. Claim 40 112

IX. CONCLUSION 115

I. QUALIFICATIONS AND BACKGROUND INFORMATION

1. My education and experience are described more fully in the attached curriculum vitae (APPLE-1004). For ease of reference, I have highlighted certain information below.

2. My academic and professional background is in Physics, Mechanical Engineering, Sensing, and Robotics, with a research specialization focused on microfabricated physical sensors, and I have been working in those fields since the completion of my Ph.D. more than 32 years ago. The details of my background and education and a listing of all publications I have authored in the past 37 years are provided in my curriculum vitae, APPLE-1004. Below I provide a short summary of my education and experience which I believe to be most pertinent to the opinions that I express here.

3. I received a B.S. in Physics from University of Minnesota, Minneapolis in 1983, and a Ph.D. in Physics from University of California at Berkeley in 1989. I was educated as a Physicist specializing in sensors and measurement. My Physics Ph.D. thesis involved measurements of the heat capacity of monolayers of atoms on surfaces, and relied on precision measurements of temperature and power using time-varying electrical signals, and also on the design and construction of miniature sensor components and associated electrical circuits for conditioning and conversion to digital format.

4. After completion of my Ph.D. in Physics at U.C. Berkeley in 1989, I joined the Jet Propulsion Laboratory (JPL) in Pasadena, CA, as a staff scientist, and began working on miniature sensors and instruments for small spacecraft. This work involved the use of silicon microfabrication technologies for miniaturization of the sensors, and served as my introduction to the field of micro-electromechanical systems (MEMS), or the study of very small mechanical sensors powered by electricity and used for detection of physical and chemical signals.

5. While at JPL, we developed accelerometers, uncooled infrared sensors, magnetometers, seismometers, force and displacement sensors, soil chemistry sensors, miniature structures for trapping interstellar dust, and many other miniature devices. Some of these projects led to devices that were launched with spacecraft headed for Mars and for other interplanetary missions. Much of this work involved the use of physical sensors for detection of small forces and displacements using micromechanical sensors.

6. I am presently the Richard Weiland Professor at the Department of Mechanical Engineering at Stanford University, where I have taught for the past 28 years. I am also currently the Senior Associate Dean of Engineering for Student Affairs at Stanford.

7. In my role at Stanford, I supervise Ph.D. students carrying out research on design, fabrication and characterization of micromechanical devices and sensors.

In this research, we have developed devices for measurement of inertial forces, pressure, light, temperature, and acoustic signals, as well as techniques for capturing and processing of signals and noise from sensors, with a detailed listing of the resulting publications and patents included in my CV.

8. I have also been active in teaching courses at Stanford, including ME210 Introduction to Mechatronics, and ME220 Introduction to Sensors. In ME220, I provide a survey of mechanisms used to transform physical phenomena into electric signals, followed by a discussion of many different categories of sensors such as pressure sensors, accelerometers, thermometers, microphones, gyroscopes, as well as sensors for chemical parameters, light, and electromagnetic phenomena. I have taught this course more than 25 times over my career at Stanford. In ME210, we provide a broad introduction to the concepts and components needed for design of autonomous mobile robots, which includes capture and processing of signals from sensors.

9. I have advised 74 Ph.D. students that have completed Ph.D. degrees and many more M.S. and B.S. students in Engineering during my time at Stanford. The research carried out with these Ph.D. students routinely includes measurement of signals which contain information and noise from the background, and require development of methods for identifying the information and noise components of

the signal and then implementing filters, subtractions, correlations, etc., as needed to produce clear signals as needed for the analysis.

10. I have published over 250 technical papers in refereed journals and conferences in the field of sensors, MEMS, and measurements. I have further presented numerous conference abstracts, posters, and talks in my field. I am a named inventor on 50 patents in my areas of work.

11. I served as General Chair or Technical Program Committee Chair for the International Conference on Solid State Sensors and Actuators ("Transducers") in 2003 and 2015, for the Hilton Head Workshop on Solid State Sensors and Actuators in 2002 and 2004, for the IEEE Sensors Conference in 2009 and 2010, and on technical program committees for several other conferences. These conferences included technical sessions on capture of signals in the presence of environmental noise sources, and processing to remove the portion of the signal that comes from the environmental sources. I recently completed a 6-year term as President of the Transducers Research Foundation, a private foundation that oversees technical conferences in the area of micromechanical sensors, actuators and systems, energy harvesting, microtechnologies for medicine and biology, and raises funds to support growth of the community, primarily by providing travel assistance for students to attend technical meetings.

12. I received the Office of the Secretary of Defense Award for Exceptional Public Service in 2010, the IEEE Sensors Council Technical Achievement Award in 2011, and was named Fellow of the ASME in 2014. I was awarded the 2018 IEEE Daniel Noble Award for Emerging Technologies. In 2022, I was elected to the National Academy of Engineering.

13. Among the publications listed in my CV, there are several which are specifically relevant to the subject matter of this declaration. For example, in the paper titled "Measurement of the Noise of a Geophone in the Presence of Large Background Signals" (*Rev. Sci. Instrum*. 69, 2767-2772 (1998)), we present a method for using a pair of sensitive vibration sensors ("geophones") operated at the same time to enable a determination of the background vibration signals detected by both sensors and the internal fundamental noise in each sensor. Since both sensors are mounted on the same surface and observing the same seismic background signals, the portion of the signal coming from the background is highly correlated, whereas the portion of the signal associated with the fundamental noise in each sensor is uncorrelated. We use measurements of the correlation between the signals from the two sensors to distinguish the seismic background signal from the sensor noise signal. To extract the sensor noise signal, we utilize the correlation coefficients to subtract out the correlated portion due to true ground motion, allowing clearer identification of the inherent noise of each sensor, even in

cases where the ground motion signals are much larger than the noise of the sensors. A similar technique is used in "A High-Precision, Wide-Bandwidth Micromachined Tunneling Accelerometer" (*JMEMS*, 10,425 (2001)), for example.

14. In the paper titled "Ultraminiature Encapsulated Accelerometers as a Fully-Implantable Sensors for Implantable Hearing Aids", (*Biomedical MicroDevices* 9, 939 (2007)), we designed and developed a novel ultraminiature accelerometer which could be mounted on the eardrum, allowing electrical measurement of acoustic signals using the mechanical elements of the ear, and enabling signal delivery to the cochlea that bypassed the mechanical elements in the middle ear. In general, the publications presented in my CV describe careful measurements of small signals from micromechanical devices, followed by amplification, filtering and processing to suppress or remove contributions from uninteresting background sources.

15. I have previously served as an expert on a patent infringement case involving the mounting and use of pressure sensors on guidewire catheters for cardiovascular procedures that included a number of sensing aspects, such as recording static and dynamic pressure signals, and compensating for electrical and mechanical errors. I have also previously served as an expert on a patent infringement case involving the design and use of miniature inertial sensors. That case involved the design and operations of micromechanical sensors, and

particularly the use of inertial sensors for detection of states of movement and rest. I have also served as an expert in a patent infringement case involving the use of sensors on athletic shoes for determining athletic performance. More recently, I served as an expert in a patent infringement case involving optical proximity sensors in smartphones and in a case involving technologies related to physiological sensors for measurement of parameters such as heart rate. My CV, APPLE-1004, includes a full listing of all cases in which I have testified at deposition or trial in the preceding four years.

16. I have been retained on behalf of Apple Inc. to offer technical opinions relating to U.S. Patent No. 8,326,611 ("the '611 patent") and prior art references relating to its subject matter. I have reviewed the '611 patent, relevant excerpts of the prosecution history of the '611 patent. I have also reviewed the following prior art references:

Prior Art Reference
U.S. Patent No. 8,194,880 B2 ("Avendano '880")
U.S. App. No. 11/699,732 ("Avendano Priority Application")
U.S. Patent No. 7,155,019 B2 ("Hou")
U.S. Patent No. 8,204,252 B1 ("Avendano '252")

17. Counsel has informed me that I should consider these materials through the lens of one of ordinary skill in the art related to the '611 patent at the time of the

earliest possible priority date of the ’611 patent, and I have done so during my review of these materials. The application leading to the ’611 patent was filed on October 26, 2009 and claims the benefit of priority to a provisional application filed October 24, 2008 (“Critical Date”). Further, application leading to the ’611 patent is a continuation-in-part of two applications filed May 25, 2007 and June 13, 2008, respectively. Counsel has informed me that the Critical Date represents the earliest possible priority date to which the challenged claims of ’611 patent are entitled, and I have therefore used that Critical Date in my analysis below.

18. I have no financial interest in the party or in the outcome of this proceeding. I am being compensated for my work as an expert on an hourly basis. My compensation is not dependent on the outcome of these proceedings or the content of my opinions.

19. In writing this declaration, I have considered the following: my own knowledge and experience, including my work experience in the fields of mechanical engineering, computer science, biomedical engineering, and electrical engineer; my experience in teaching those subjects; and my experience in working with others involved in those fields. In addition, I have analyzed various publications and materials, in addition to other materials I cite in my declaration.

20. My opinions, as explained below, are based on my education, experience, and expertise in the fields relating to the ’611 patent. Unless otherwise stated, my

testimony below refers to the knowledge of one of ordinary skill in the fields as of the Critical Date, or before. Any figures that appear within this document have been prepared with the assistance of Counsel and reflect my understanding of the ’611 patent and the prior art discussed below.

II. OVERVIEW OF THE CONCLUSION FORMED

21. This declaration explains the conclusions that I have formed based on my analysis. To summarize those conclusions, based upon my knowledge and experience and my review of the prior art publications listed above, I believe that:

- Claims 29-31, 33-37, and 41-44 are rendered obvious by Avendano ’880 in view of Hou
- Claims 32 and 38-40 are rendered obvious by Avendano ’880 in view of Hou and Avendano ’252

III. LEVEL OF ORDINARY SKILL IN THE ART

22. In my opinion, one of ordinary skill in the art relating to, and at the time of, the invention of the ’611 patent would have been someone with at least a bachelor of science in electrical engineering, computer engineering, computer science, mechanical engineering, or a related discipline, with at least two years of relevant experience in a field related to acoustics, speech recognition, speech detection, or signal processing. A greater amount of education, *i.e.*, a doctorate in electrical engineering, computer engineering, computer science, mechanical engineering, or

a related discipline would also qualify for the hypothetical person of ordinary skill in the art in lieu of fewer years of work experience. Additional education or industry experience may compensate for a deficit in one of the other aspects of the requirements stated above.

23. Based on my experiences, I have a good understanding of the capabilities of one of ordinary skill. Indeed, I have taught, participated in organizations, and worked closely with many such persons over the course of my career. Based on my knowledge, skill, and experience, I have an understanding of the capabilities of one of ordinary skill. For example, from my industry experience, I am familiar with what an engineer would have known and found predictable in the art. From teaching and supervising my post-graduate students, I also have an understanding of the knowledge that a person with this academic experience possesses. Furthermore, I possess those capabilities myself.

IV. LEGAL STANDARDS

A. Terminology

24. I have been informed by Counsel and understand that the best indicator of claim meaning is its usage in the context of the patent specification as understood by one of ordinary skill. I further understand that the words of the claims should be given their plain meaning unless that meaning is inconsistent with the patent specification or the patent's history of examination before the Patent Office.

Counsel has also informed me, and I understand that, the words of the claims should be interpreted as they would have been interpreted by one of ordinary skill at the time of the invention was made (not today). Because I do not know at what date the invention as claimed was made, I have used the earliest possible priority date of the '611 patent as the point in time for claim interpretation purposes. That date was October 24, 2008, the Critical Date.

B. Legal Standards for Anticipation

25. I have been informed by Counsel and understand that documents and materials that qualify as prior art can render a patent claim unpatentable as anticipated. I am informed by Counsel and understand that all prior art references are to be looked at from the viewpoint of a person of ordinary skill in the art.

26. I am informed by Counsel and understand that a challenged claim is unpatentable as "anticipated" under 35 U.S.C. § 102 if it is determined that all the limitations of the claim are described in a single prior art reference. I am informed by Counsel and understand that, to anticipate a claim, a prior art reference must disclose, either expressly or inherently, each and every limitation of that claim and enable one of ordinary skill in the art to make and use the invention.

27. I have been informed by Counsel and understand that in an *inter partes review*, "the petitioner shall have the burden of proving a proposition of

unpatentability," including a proposition of anticipation, "by a preponderance of the evidence." 35 U.S.C. §316(e).

C. Legal Standards for Obviousness

28. I have been informed by Counsel and understand that documents and materials that qualify as prior art can render a patent claim unpatentable as obvious. I am informed by Counsel and understand that all prior art references are to be looked at from the viewpoint of a person of ordinary skill in the art at the time of the invention, and that this viewpoint prevents one from using his or her own insight or hindsight in deciding whether a claim is obvious.

29. I have been informed by Counsel and understand that a claim is unpatentable for obviousness under 35 U.S.C. § 103 (in the pre-AIA form of that statute that applies to the '611 patent) "if the differences between the subject matter sought to be patented and the prior art are such that the subject matter as a whole would have been obvious at the time the invention was made to a person having ordinary skill in the art to which said subject matter pertains." I am informed by Counsel and understand that obviousness may be based upon a combination of references. I am informed by Counsel and understand that the combination of familiar elements according to known methods is likely to be obvious when it does no more than yield predictable results. However, I am informed by Counsel and understand that

a patent claim composed of several elements is not proved obvious merely by demonstrating that each of its elements was, independently, known in the prior art.

30. I am informed by Counsel and understand that when a patented invention is a combination of known elements, a court must determine whether there was an apparent reason to combine the known elements in the fashion claimed by the patent at issue by considering the teachings of prior art references, the effects of demands known to people working in the field or present in the marketplace, and the background knowledge possessed by a person having ordinary skill in the art.

31. I am informed by Counsel and understand that a patent claim composed of several limitations is not proved obvious merely by demonstrating that each of its limitations was independently known in the prior art. I am informed by counsel for the Patent Owner and understand that identifying a reason those elements would be combined can be important because inventions in many instances rely upon building blocks long since uncovered, and claimed discoveries almost of necessity will be combinations of what, in some sense, is already known. I am informed by Counsel and understand that it is improper to use hindsight in an obviousness analysis, and that a patent's claims should not be used as a "roadmap."

32. I am informed by Counsel and understand that an obviousness inquiry requires consideration of the following factors: (1) the scope and content of the prior art; (2) the differences between the claims and the prior art; (3) the level of

ordinary skill in the pertinent art; and (4) any objective indicia of non-obviousness, such as commercial success, long-felt but unresolved need, failure of others, industry recognition, copying, and unexpected results. I understand that the foregoing factors are sometimes referred to as the "Graham factors."

33. I have been informed by Counsel and understand that an obviousness evaluation can be based on a combination of multiple prior art references. I understand that the prior art references themselves may provide a suggestion, motivation, or reason to combine, but that the nexus linking two or more prior art references is sometimes simple common sense. I have been informed by Counsel and understand that obviousness analysis recognizes that market demand, rather than scientific literature, often drives innovation, and that a motivation to combine references may be supplied by the direction of the marketplace.

34. I have been informed by Counsel and understand that if a technique has been used to improve one device, and a person of ordinary skill at the time of invention would have recognized that it would improve similar devices in the same way, using the technique is obvious unless its actual application is beyond his or her skill.

35. I have been informed by Counsel and understand that practical and common sense considerations should guide a proper obviousness analysis, because familiar items may have obvious uses beyond their primary purposes. I have been

informed by Counsel and understand that a person of ordinary skill looking to overcome a problem will often be able to fit together the teachings of multiple prior art references. I have been informed by Counsel and understand that obviousness analysis therefore takes into account the inferences and creative steps that a person of ordinary skill would have employed at the time of invention.

36. I have been informed by Counsel and understand that a proper obviousness analysis focuses on what was known or obvious to a person of ordinary skill at the time of invention, not just the patentee. Accordingly, I understand that any need or problem known in the field of endeavor at the time of invention and addressed by the patent can provide a reason for combining the elements in the manner claimed.

37. I have been informed by Counsel and understand that a claim can be obvious in light of a single reference, without the need to combine references, if the elements of the claim that are not found explicitly or inherently in the reference can be supplied by the common sense of one of skill in the art.

38. I have been informed by Counsel and understand that secondary indicia of non-obviousness may include (1) a long felt but unmet need in the prior art that was satisfied by the invention of the patent; (2) commercial success of processes covered by the patent; (3) unexpected results achieved by the invention; (4) praise of the invention by others skilled in the art; (5) taking of licenses under the patent by others; (6) deliberate copying of the invention; (7) failure of others to find a

solution to the long felt need; and (8) skepticism by experts. I understand that evidence of secondary indicia of non-obviousness, if available, should be considered as part of the obviousness analysis.

39. I have been informed by Counsel and understand that there must be a relationship between any such secondary considerations and the invention, and that contemporaneous and independent invention by others is a secondary consideration supporting an obviousness determination.

40. In sum, my understanding is that prior art teachings are properly combined where one of ordinary skill having the understanding and knowledge reflected in the prior art and motivated by the general problem facing the inventor, would have been led to make the combination of elements recited in the claims. Under this analysis, the prior art references themselves, or any need or problem known in the field of endeavor at the time of the invention, can provide a reason for combining the elements of multiple prior art references in the claimed manner.

41. I have been informed by Counsel and understand that in an *inter partes review*, "the petitioner shall have the burden of proving a proposition of unpatentability," including a proposition of obviousness, "by a preponderance of the evidence." 35 U.S.C. §316(e).

V. THE ’611 PATENT

A. Overview of the ’611 Patent

42. Prior to the Critical Date of the ’611 patent, numerous products, publications, and patents existed that implemented or described the functionality claimed in the ’611 patent. Specifically, it was well established to use a pair of physical microphones to construct a pair of virtual microphones, such that one of the virtual microphones is more sensitive to speech than the other. Further, it was also well established to generate such virtual microphones by delaying and filtering signals received from the physical microphones, and forming various combinations of the delayed and filtered signals. Further still, it was also well established to detect voice activity by comparing the virtual microphones to one another to identify characteristics indicative of speech. Further still, it was also well established to use adaptive filters and other signal processing elements to implement these techniques. The methodology of the ’611 patent was therefore well-known in the prior art as of the Critical Date. Further, to the extent there was any problem to be solved in the ’611 patent, it had already been solved in the prior art systems before the Critical Date of the ’611 patent as I discuss below.

43. The ’611 patent describes the problem of pollution of the speech signal captured by a single microphone with noise from one or more noise sources in the environment, and describes that single-microphone systems can be improved

through the use of additional non-acoustic sensors for determining when speech is being produced. APPLE-1001, 1:23-46. However, "an acoustic-only system is desired in some cases (e.g., for reduced cost, as a supplement to the non-acoustic sensor, etc.)." *Id.*, 1:44-46. As I discuss below, systems with two or more microphones that were capable of detecting the presence or absence of speech—and therefore providing improved performance relative to the single-microphone systems identified in the '611 patent—were well-known in the prior art.

44. The '611 patent "relates to noise suppression systems, devices, and methods for use in acoustic applications." *Id.*, 1:16-18. In at least some of the embodiments described in the '611 patent, a system constructs "virtual microphones ... using two or more omnidirectional microphones and associated signal processing," and "detects voice activity by generating a ratio of the energies of the virtual microphones, and comparing that ratio to a threshold." *Id.*, 3:55-7:7, 18:29-32.

45. In general, the '611 patent describes generating each of a first virtual microphone (V_1) and a second virtual microphone (V_2) by obtaining signals from two physical microphones, applying various filters to the signals, and forming various combinations of the filtered signals. *Id.*, 5:20-6:19, FIGS. 3-4.

46. As an example, with reference to FIG. 4, the '611 patent describes that first virtual microphone (V_1) is generated by (i) applying a delay filter ($z^{-\gamma}$) to a signal

that is output from a first physical microphone (O_1), (ii) applying a calibration filter ($\alpha(z)$) and an adaptive filter ($\beta(z)$) to a signal that is output from a second physical microphone (O_2), and (iii) combining the filtered signals. *Id.,* 5:20-6:19, FIG. 4.

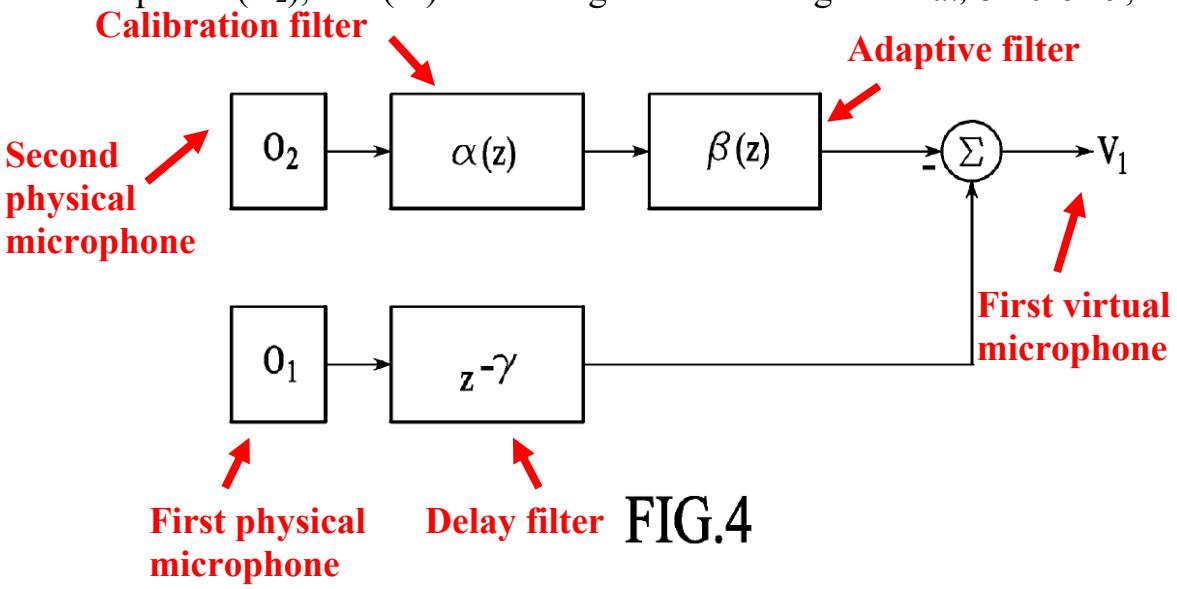

APPLE-1001, FIG. 4 (annotated)

47. As another example, with reference to FIG. 3, the '611 patent describes that a second virtual microphone (V_2) is generated by (i) obtaining a first signal from a first physical microphone (O_1) and a second signal from a second physical microphone (O_2), (ii) applying an adaptive filter ($\beta(z)$) and a delay filter ($z^{-\gamma}$) to the first signal, (iii) applying a calibration filter ($\alpha(z)$) to the second signal, and (iv) combining the filtered first signal and the filtered second signal. *Id.,* 5:20-6:19, FIG. 3.

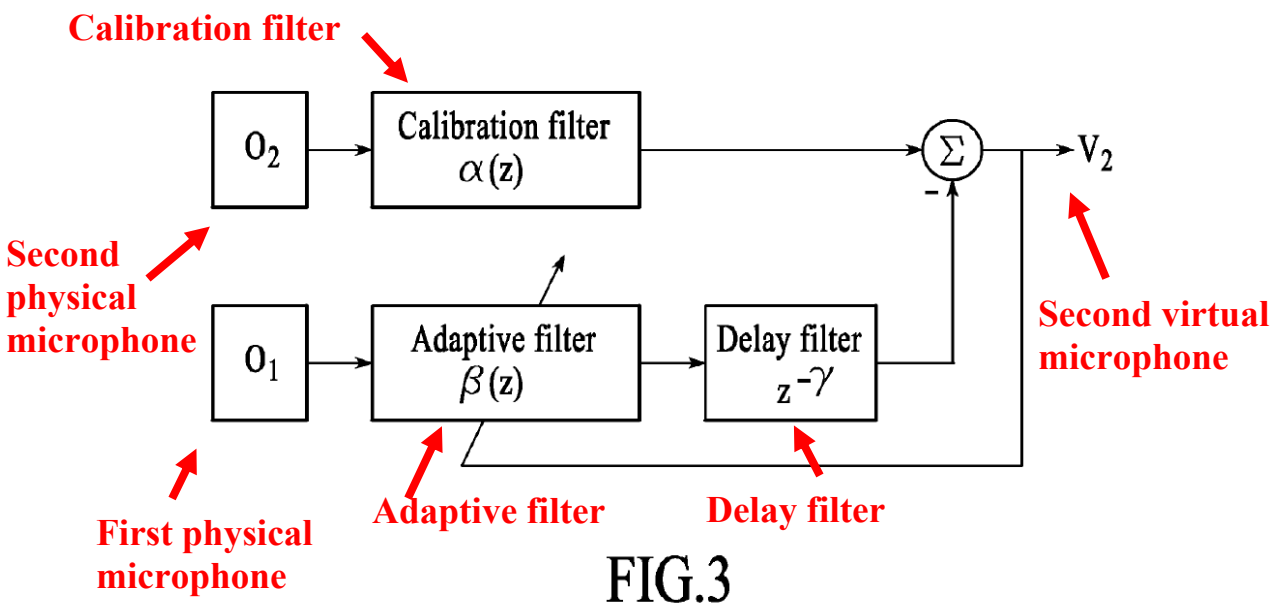

APPLE-1001, FIG. 3 (annotated)

48. According to the '611 patent, a calibration filter (α(z)), an adaptive filter (β(z)), and a delay filter ($z^{-\gamma}$) are used to construct a virtual microphone V_2 from two physical microphones O_1 and O_2. In particular, the calibration filter (α(z)) compensates a microphone such that a response of the second physical microphone O_2 matches a response of the first physical microphone O_1. *Id.*, 5:20-34. Further, the adaptive filter (β(z)) "describes the relationship between O_1 and calibrated O_2 for speech." *Id.* Further, the delay filter ($z^{-\gamma}$) applies a fixed delay "that depends on the size of the [microphone] array." *Id.*

49. As described by the '611 patent, the ratio of energies of the first and second virtual microphones may be used "with any detection system . . . to determine when speech is occurring." *Id.*, 6:20-10:8, FIGS. 5-11. In particular, the ratio is compared to a threshold value to determine the presence of acoustic voice activity.

Id., 6:47-51, 7:5-7, FIGS. 5-11. For instance, when the ratio is greater than a threshold value, this is indicative of a presence of acoustic voice activity. *Id.* In contrast, when the ratio is less than the threshold value, this is indicate of an absence of acoustic voice activity. *Id.*

B. Prosecution History of the '611 Patent

50. Only one non-final Office Action was issued during the prosecution of the application from which the '611 patent issued. APPLE-1002, 193-198. The Office Action contained a single rejection—a provisional double patenting rejection of all of the pending claims over claims of a co-pending application in the family (*i.e.,* claims 1-42 of U.S. Patent Application No. 12/606,146, now U.S. Patent No. 8,321,213). *Id*., 195-196. A notice of allowance was issued in response to a terminal disclaimer. *Id.*, 218-219, 227-233. None of Avendano '880, the Avendano Priority Application, Hou, or Avendano '252 was cited during prosecution of the '611 patent.

VI. SUMMARY OF THE PRIOR ART

A. Overview of Avendano '880

51. Avendano '880 describes producing primary and secondary signals associated with front and back cardioid regions about an audio device (*e.g.*, a "cardioid primary signal" and a "cardioid secondary signal") by delaying and subtracting acoustic signals captured by physical microphones. APPLE-1005, 4:47-52, 5:25-35. Avendano '880 further relates to determining "inter-microphone

level differences (ILD) ... based on energy level differences of a pair of omni-directional microphones," and "utilizing [ILD] to attenuate noise and enhance speech." *Id.*, 2:5-9. In particular, as discussed in further detail below, Avendano '880 describes determining a presence (or absence) of speech by calculating the ratio between the energies of the cardioid primary signal and the cardioid secondary signal, and comparing the ratio of a threshold. *Id,* 5:49-6:34.

52. Avendano '880 discloses that an "audio device 104" includes at least a "primary microphone 106" and a "secondary microphone 108." *Id.*, 3:27-35, FIGS. 1a-1b. Each of Avendano '880's microphones may be an "omni-directional microphone." *Id.*

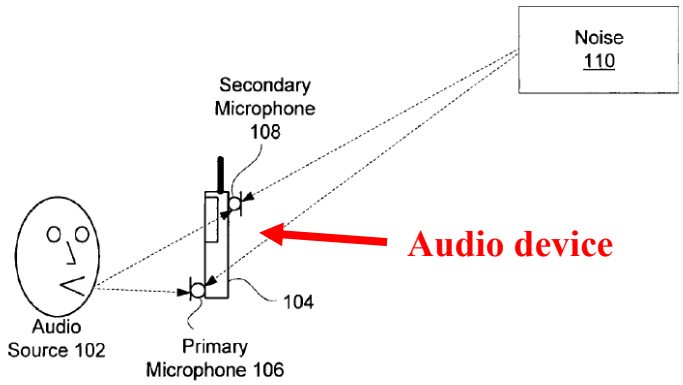

FIG. 1a

APPLE-1005, FIG. 1a (annotated)

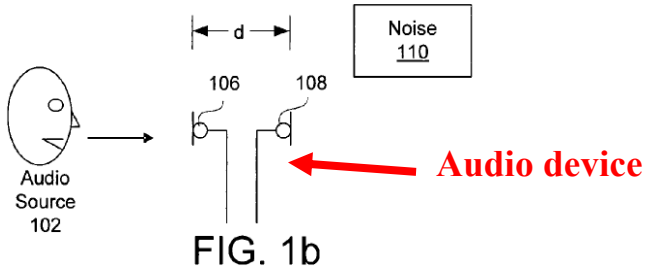

APPLE-1005, FIG. 1a (annotated)

53. Avendano '880 describes that the "primary microphone 106" and a "secondary microphone 108" are arranged at different locations on the "audio device 104," such that the microphones detect speech from an "audio source 102" differently. *Id.*, 3:45-49. For example, with reference to Figures 1a and 1b, Avendano '880 discloses that "the primary microphone 106 is much closer to [an] audio source 102 than the secondary microphone 108." *Id.* Due to this difference in locations between the two microphones, "the intensity level is higher for the primary microphone 106 resulting in a larger energy level during a speech/voice segment." *Id*. Further, Avendano '880 describes that, "because directional response of the primary microphone 106 is highest in the direction of the audio source 102 and directional response of the secondary microphone 108 is lower in the direction of the audio source 102, the level difference is highest in the direction of the audio source 102 and lower elsewhere." *Id.*, 3:49-55.

54. By combining signals from the pair of omni-directional microphones to form a pair of virtual directional microphones (described as a cardioid primary signal

and a cardioid secondary signal), Avendano ’880 provides the benefits of capturing speech signals and suppressing noise signals that would be available from use of a pair of directional microphones, but with smaller size and cost. *Id.*, 1:64-66.

55. As described by Avendano ’880, this “level difference may then be used to discriminate speech and noise in the time-frequency domain.” *Id.*, 3:55-57. For example, Avendano ’880 describes obtaining signals from the two microphones (*e.g.,* signals x_1 and x_2), and processing the signals using a “differential microphone array (DMA) module 302” to “create two different directional patterns around the audio device 104.” *Id.*, 4:20-41. As Avendano ’880 explains, “[e]ach directional pattern is a region about the audio device 104 in which sounds generated by an audio source 102 within the region may be received by the microphones 106 and 108 with little attenuation,” and “[s]ounds generated by audio sources 102 outside of the directional pattern may be attenuated.” *Id.*, 4:41-46.

56. For example, the DMA module 302 generates two different processed signals, each having a different directional pattern for receiving sounds. *Id.*, 4:47-52, 5:25-35.

57. In particular, the DMA module 302 generates a first processed signal having a directional pattern for receiving sounds “within a front cardioid region around the audio device 104.” *Id.* This first processed signal may be referred to as a

"cardioid primary signal (C_f)." *Id.* As discussed by Avendano '880, this cardioid primary signal is oriented in the direction of the expected speech source. *Id.,* 3:42-55, 4:47-54, 5:15-39, 9:29-42, FIGS. 1a-1b, 6.

58. As another example, the DMA module 302 also generates a second processed signal having a directional pattern for receiving sounds "within a back cardioid region around the audio device 104." *Id.* This second processed may be referred to as a "cardioid secondary signal (C_b)." *Id.*, 4:47-52, 5:25-35. As discussed by Avendano '880, this cardioid secondary signal is oriented away from the direction of the expected speech source. *Id.,* 3:42-55, 4:47-54, 5:15-39, 9:29-42, FIGS. 1a-1b, 6.

59. Avendano '880's front and back cardioid regions are shown in Figure 6. As shown in Figure 6, the front cardioid region primarily extends from an origin point towards a front of the audio device 104 (*e.g.,* in the 0° direction), and accordingly, in the direction of the audio source 102. *Id*., 9:29-42, FIG. 6. In contrast, the back cardioid region primarily extends from the origin point towards a rear of the audio device 104 (*e.g.,* in the 180° direction), and accordingly, in the direction away from the audio source 102. *Id*.

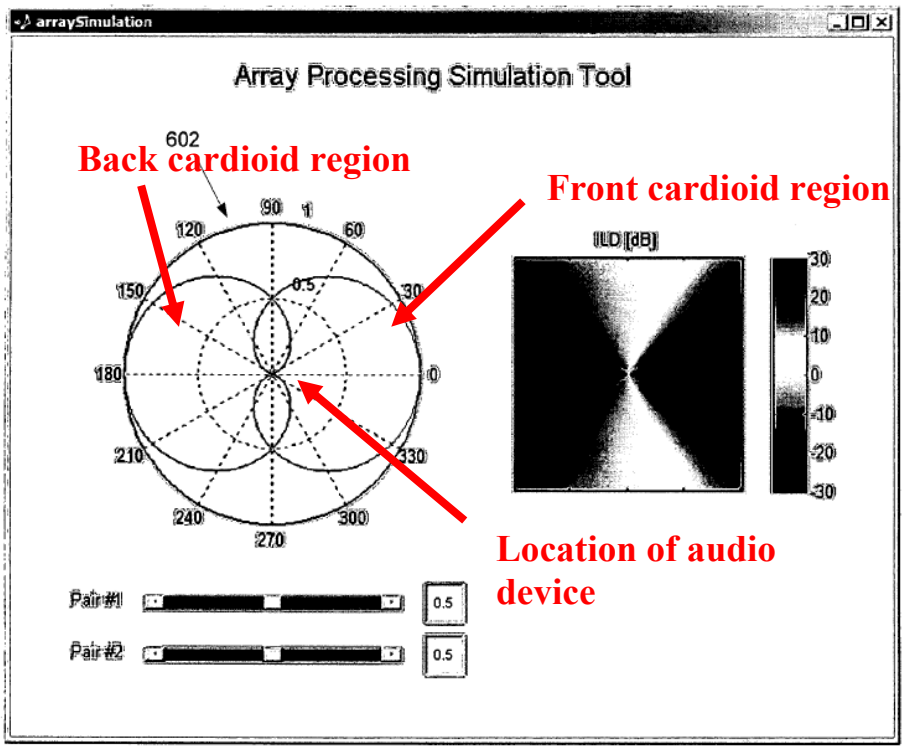

FIG. 6

APPLE-1005, FIG. 6 (annotated)

60. As shown in Figure 4a, Avendano '880 discloses that the "cardioid primary signal (C_f)" is generated by combining (i) the signal x_1 from the primary microphone 106, and (ii) the signal x_2 from the secondary microphone 108 (*e.g.,* the signal x_2 having been delayed by a "delay node 404" and filtered by a "gain module 406"). *Id.*, 5:15-35. Further, Avendano '880 discloses that the "cardioid secondary signal (C_b)" is generated by combining (i) the signal x_2 from the secondary microphone 108, and (ii) the signal x_1 from the primary microphone 106 (*e.g.,* the signal x_1 having been delayed by a "delay node 402"). *Id.* The "delay

nodes" can be implemented using one or more filters (*e.g.,* "allpass filters"). *Id.,* 8:47-51.

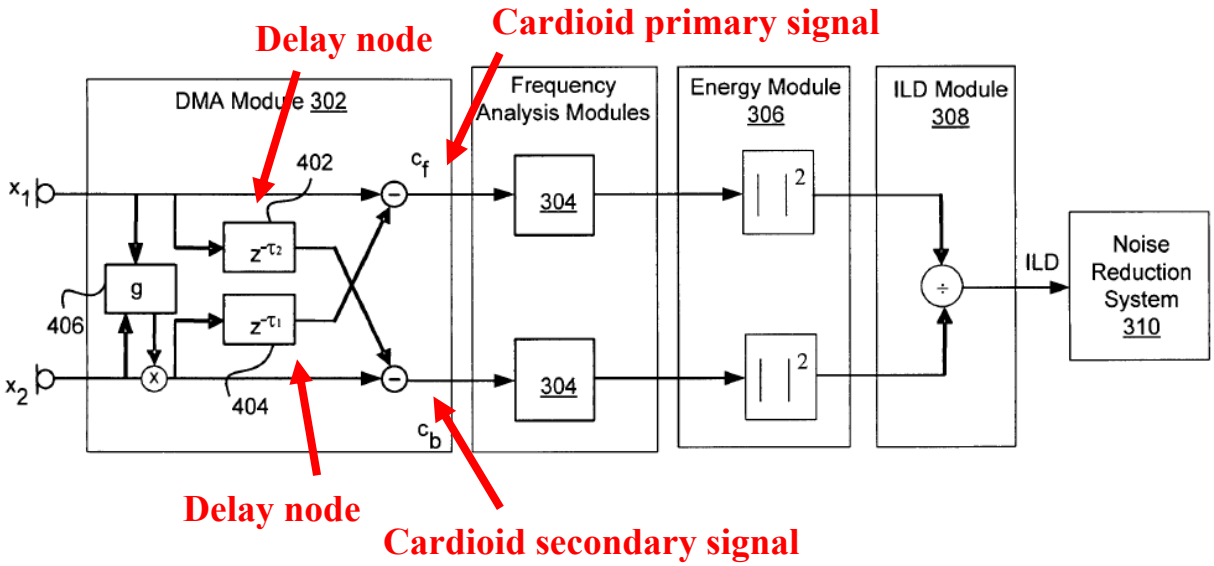

FIG. 4a

APPLE-1005, FIG. 4a (annotated)

61. As described by Avendano '880, the presence of speech can be detected by comparing the energies of the "cardioid primary signal (C_f)" and the "cardioid secondary signal (C_b)." *Id.*, 5:49-6:34. In particular, Avendano '880 discloses that calculating the ratio between (i) the energy of the "cardioid primary signal (C_f)" and (ii) the energy of the "cardioid secondary signal (C_b)," and comparing the ratio of a threshold to determine a presence (or absence) of speech. *Id.*

62. For example, Avendano '880 describes calculating an "energy level" (E_f) of a "cardioid primary signal (C_f)" based on the following equation, in which the primary signal is squared and integrated over a time frame:

$$E_f(t, \omega) = \int_{frame} |C_f(t', \omega)|^2 \, dt',$$

APPLE-1005, 5:60

63. Further, Avendano '880 similarly describes calculating an "energy level" (E_b) of a "cardioid secondary signal (C_b)" based on the following equation, in which the secondary signal is squared and integrated over a time frame:

$$E_b(t, \omega) = \int_{frame} |C_b(t', \omega)|^2 \, dt'.$$

APPLE-1005, 6:5

64. Avendano '880 describes determining the ratio between these two energy levels (ILD):

$$ILD(t, \omega) = \frac{\int |C_f(t', \omega)|^2 \, dt'}{\int_{frame} |C_b(t', \omega)|^2 \, dt'}.$$

Energy level of C_f

Energy level of C_b

APPLE-1005, 6:16 (annotated)

65. Avendano ’880 also describes determining the presence or absence of speech by comparing the ratio (ILD) to a “threshold”:

$$\lambda_I(t, \omega) = \begin{cases} \approx 0 & \text{if} \quad ILD(t, \omega) < \text{threshold} \\ \approx 1 & \text{if} \quad ILD(t, \omega) > \text{threshold} \end{cases}$$

APPLE-1005, 6:61

66. As described by Avendano ’880, if the ratio (ILD) is “smaller than a threshold value (e.g., threshold=0.5) above which speech is expected to be,” a value λ_1 is set to zero to indicate an absence of speech. *Id.*, 6:58-7:3. In contrast, if the ratio (ILD) “starts to rise (e.g., because speech is present within the large ILD region), λ_1 increases” (*e.g.,* is set to one) to indicate a presence of speech. *Id.*

67. Avendano ’880’s ratio (ILD) is used to process audio signals “through a noise reduction system 310” to “enhance the speech of the primary acoustic signal.” *Id.*, Abstract, 6:35-36. *See also id.,* 6:36-8:23, 10:18-50, FIGS. 7-8. For example, as described by Avendano ’880, when speech is detected based on the ratio (ILD), a “noise estimate module 312 slows down [a] noise estimation process,” such that “the speech energy does not contribute significantly to the final noise estimate.” *Id.,* 7:4-6. This techniques enables a “filtering module 314” to generate a filter to “suppress noise/enhance noise” more effectively. *Id.,* 7:4-8:23, 10:26-49, 6:41-58.

B. Overview of Hou

68. Hou relates to "[i]mproved approaches to matching sensitivities of microphones in multi-microphone directional processing systems ... so that directional noise suppression is robust." APPLE-1008, Abstract.

69. As an example, Hou's Figure 5 shows "a two-microphone directional processing system 500" for "compensat[ing] (or correct[ing]) for the relative difference in sensitivity between ... mismatched first and second microphones" and producing an "output signal ... hav[ing] robust directionality despite a mismatch between the first and second microphones." *Id.*, 5:25-56, FIG. 5.

70. Hou's system generates directional signals by suppressing sounds (*e.g.,* interference) coming from particular directions relative to a system. *Id.*, 1:2:2:2. An "output signal" that is directional "is dependent on which directions the input signals come from." *Id*. Further, as Hou explains, "[t]he sensitivity of the microphones of the sound pick up system must be matched in order to achieve good directionality." *Id.*

71. Hou's system compensates for the relative difference in sensitivity between microphones, at least in part, by processing signals output by the microphones and comparing the processing signals to one another. *Id.*, 5:25-6:22, FIG. 5.

72. For instance, Hou's system receives "a first electronic sound signal" from a "microphone 502," and "estimates the minimum for the first electronic sound

signal" using a "first minimum estimate unit 508." *Id.*, 5:27-41. In particular, the "first minimum estimate unit 508" estimates the minimum for the first electronic sound signal by measuring the minimum for the first electronic sound signal "over a time constant duration. " *Id.*

73. Further, Hou's system receives "a second electronic sound signal" from a "microphone 504," delays the "second electronic sound signal" using a "delay unit 516," and "estimates the minimum for the second electronic sound signal" using a "second minimum estimate unit 510." *Id.* In particular, the "second minimum estimate unit 510" estimates the minimum for the second electronic sound signal by measuring the minimum for the second electronic sound signal "over a time constant duration." *Id.*

74. Further, Hou's system compares the minimum for the first electronic sound signal and the second electronic sound signal to determine the degree of which one of the signals is scaled in order to compensate for a difference in sensitivity between the microphones. *Id.,* 5:42-6:2, FIG. 5.

75. In particular, in Hou's system, a "divide unit 512 produces a quotient by dividing the first minimum estimate by the second minimum estimate." *Id.*, 5:42-43. This "quotient represents a scaling amount that is sent to a multiplication unit 514." *Id*, 5:43-45. Further, in Hou's system, "[t]he second electronic sound signal

is then multiplied with the scaling amount to produce a compensated sound signal." *Id.,* 5:45-47.

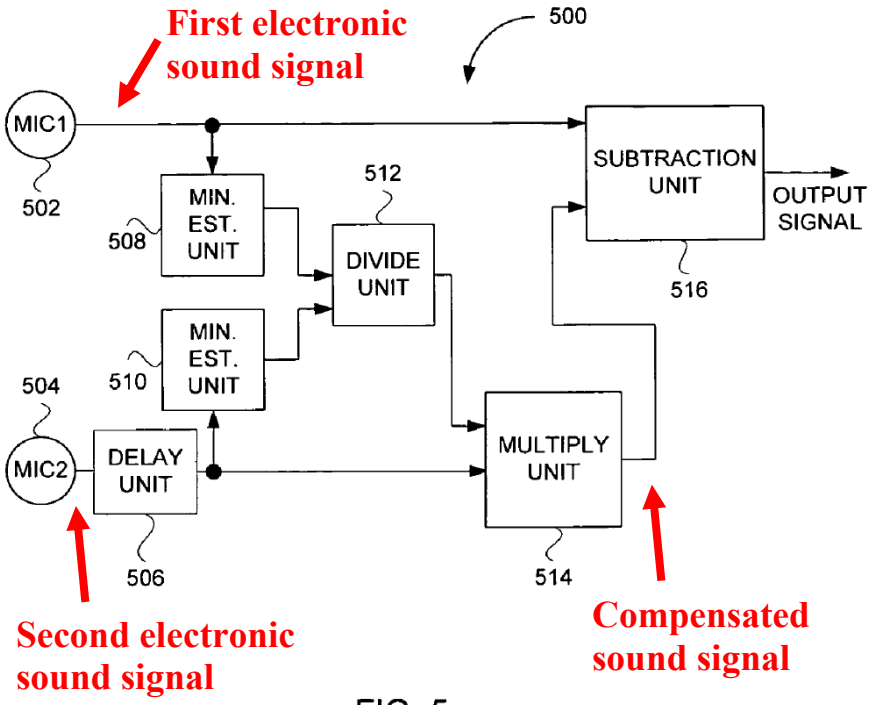

FIG. 5

APPLE-1008, FIG. 5 (annotated)

76. As described by Hou, "[t]he compensated sound signal is thus compensated (or corrected) for the relative difference in sensitivity between the mismatched first and second microphones 502 and 504." *Id.,* 5:47-50.

77. Further, in Hou's system, "[a] subtraction unit 516 then subtracts the compensated electronic sound signal from the first electronic sound signal to produce an output signal ... hav[ing] robust directionality despite a mismatch between the first and second microphones 502 and 504." *Id.,* 5:50-56.

78. As described by Hou, it is beneficial to generate a compensated sound signal in the context of a noise suppression system. *Id.* 9:28-41. For example, a noise suppression system can generate such a compensated sound signal to ensure that "directional noise suppression is not affected by microphone mismatch, ... the drift of microphone sensitivity over time, ... [or] the non-uniform distribution of sound pressure in real-life application." *Id.* 9:28-38. Accordingly, "superior directionality and consistent Signal-to-Noise Ratio (SNR) [is achieved] across all conditions." *Id.*, 9:38-41.

C. Overview of Avendano '252

79. Avendano '252 is a continuation-in-part of Avendano '880, and incorporates the entirety of Avendano '880's disclosure by reference. APPLE-1006, 1:8-23.

80. Avendano '252 additionally describes an "array processing module 410" and an "adaptive array processing (AAP) engine 304" that are similar to the "DMA Module 302" originally described in Avendano '880. APPLE-1006, 5:17-7:64, FIGS. 4b-5. For example, as with Avendano '880's "DMA Module 302," each of Avendano '252's "array processing module 410" and "AAP engine 304" generates (i) a forward facing direction signal (*e.g.,* a "forward-facing cardioid pattern," "c_1") and (ii) a backward facing directional signal (*e.g.,* a "backward-facing cardioid pattern," "c_2"). APPLE-1006, 5:17-7:64, FIGS. 4b-5.

81. Further, as with Avendano ’880’s “DMA Module 302,” each of the “array processing module 410” and the “AAP engine 304” generates the forward-facing cardioid pattern c_1 by combining (i) signal x_1 from primary microphone 106, and (ii) signal x_2 from secondary microphone 108 (signal x_2 having been delayed by “delay node 414” and filtered by “equalization module 412.” APPLE-1006, 5:17-7:64, FIGS. 4b-5. Further, as with Avendano ’880’s “DMA Module 302,” each of the “array processing module 410” and the “AAP engine 304” generates the backward-facing cardioid pattern c_2 by combining (i) signal x_2 from secondary microphone 108, and (ii) signal x_1 from primary microphone 106 (signal x_1 having been delayed by “delay node 416”). APPLE-1006, 5:17-7:64, FIGS. 4b-5.

82. To illustrate, example inputs and outputs of Avendano ’252’s “array processing module 410” are shown below:

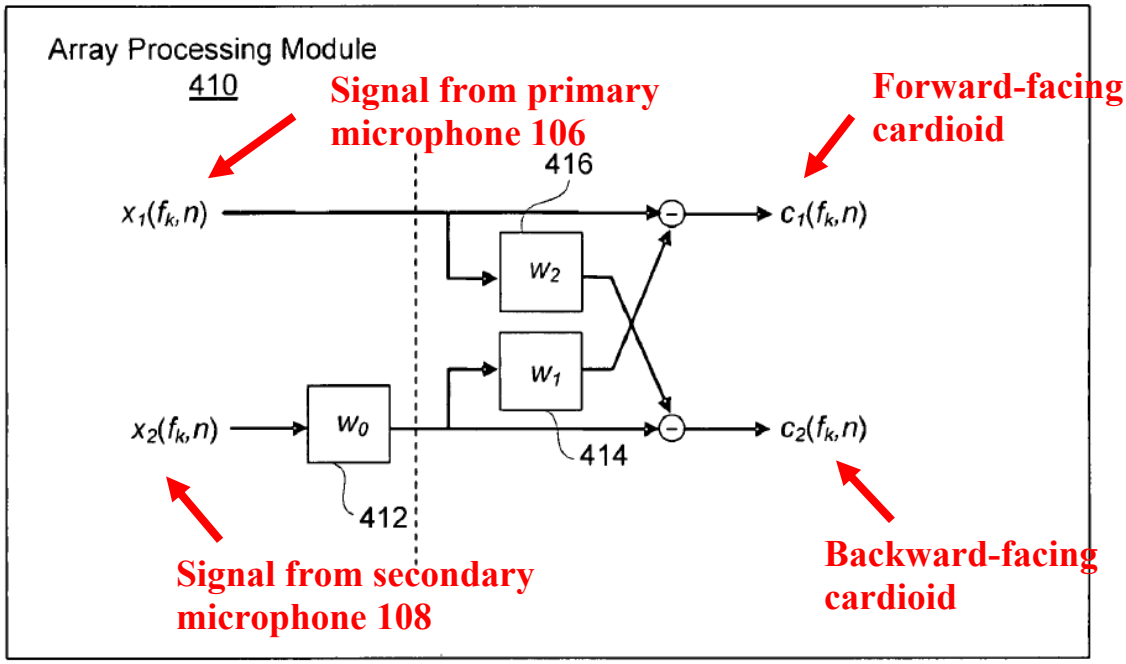

FIG. 4b

APPLE-1006, FIG. 4b (annotated)

83. Further, example inputs and outputs of Avendano '252's "AAP engine 304" are shown below, which are similar to those in Avendano '252's "array processing module 410":

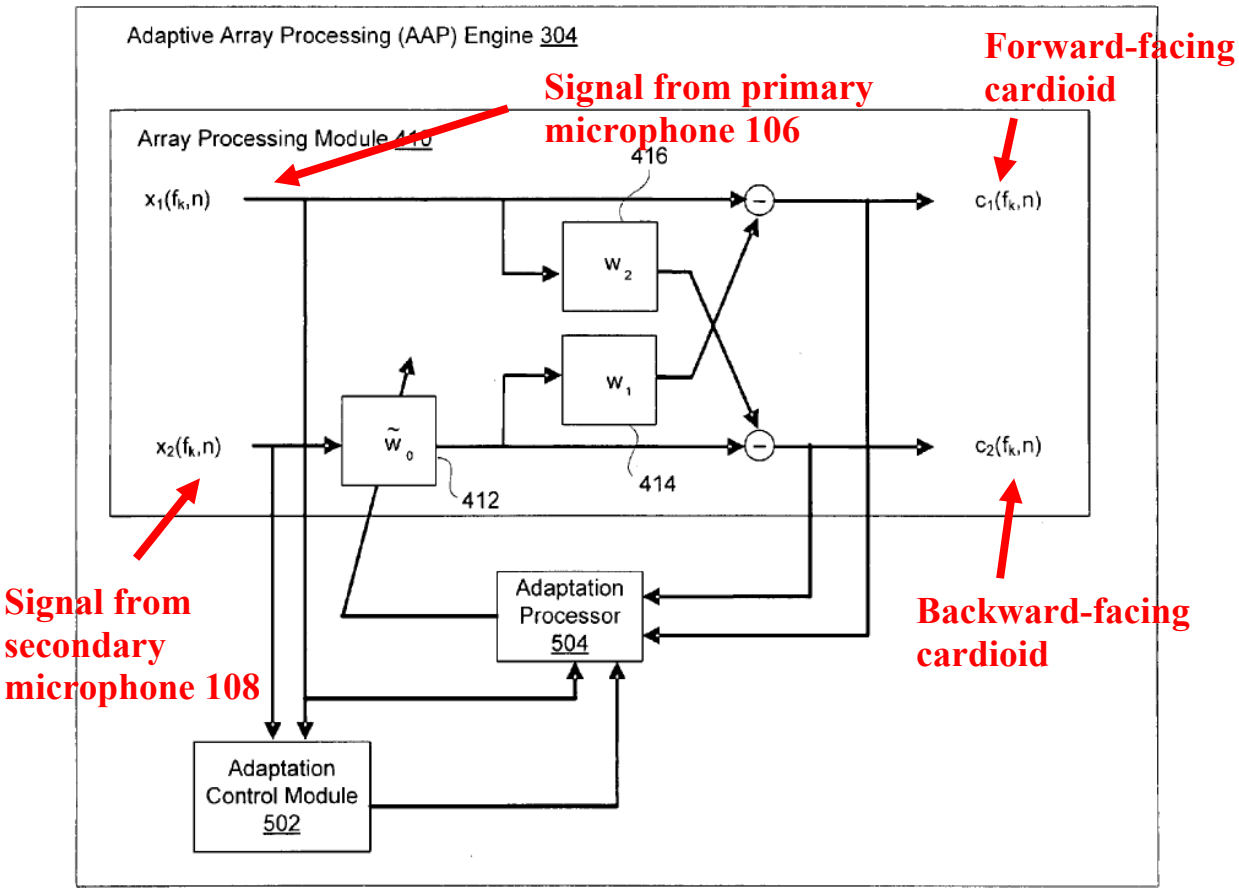

FIG. 5

APPLE-1006, FIG. 5 (annotated)

84. However, Avendano '252 describes additional components to enhance the operation of the "array processing module 410" and the "AAP engine 304." APPLE-1005, 10:1-59; 11:56-12:10; FIGS. 5, 7. For example, the "AAP engine 304" additionally includes an "adaption control module 502" and an "adaption processor 504" to control "an adaptive equalization coefficient" of the "equalization module 412." *Id.* The "adaptation control module 502 is configured to operate as a switch to activate the adaptation processor 504, which will adjust

the equalization coefficient." *Id.*, 10:9-11. In particular, "the adaptation may be triggered by identifying frames dominated by speech." *Id.* 10:11-15. Further, the "adaptation processor 504 is configured to adjust the equalization coefficient such that a desired speech signal is cancelled by a backward-facing cardioid pattern," such as by "adapt[ing] the equalization coefficient to essentially cancel the desired signal in order to create a zero or null in that direction." *Id.,* 10:37-46.

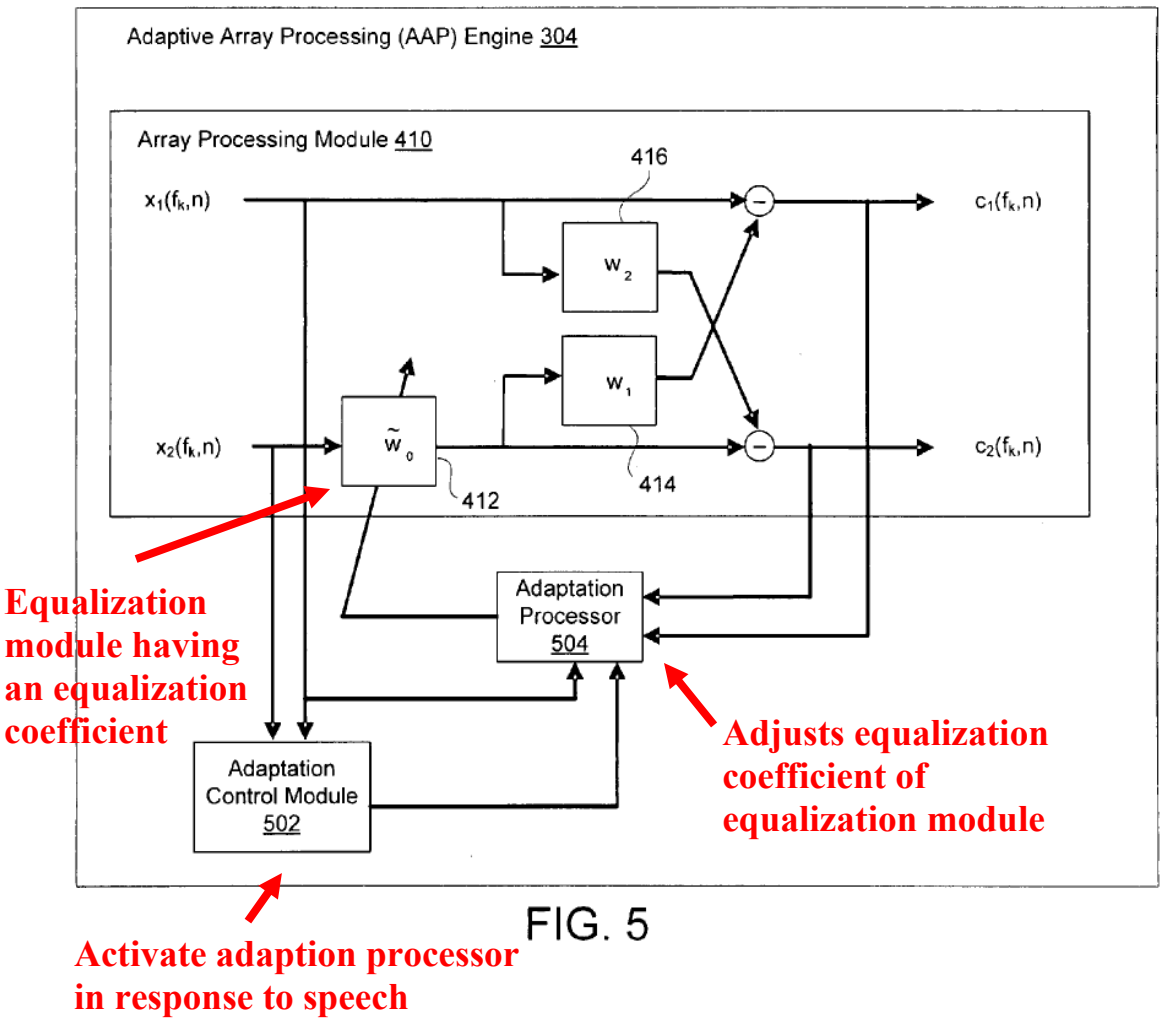

FIG. 5

APPLE-1006, FIG. 5 (annotated)

85. Avendano ’252 claims priority to U.S. App. No. 11/699,732 (“Avendano Priority Application”). APPLE-1006, 1:8-23. The Avendano Priority Application supports at least Avendano ’252’s claim 1. For example, the Avendano Priority Application discloses “[a] method for adaptive processing of a close microphone array in a noise suppression system.” APPLE-1007, [0008], [0021], [0062]-[0070], FIGS. 7-8. Further, the Avendano Priority Application discloses “receiving a primary acoustic signal and a secondary acoustic signal.” APPLE-1007, [0009], [0022]-[0024], [0027], [0029], [0062], FIGS. 1a-1b, 2-5, 7. Further, the Avendano Priority Application discloses “performing frequency analysis on the primary and secondary acoustic signals to obtain primary and secondary sub-band signals.” APPLE-1007, [0010]-[0011], [0029]-[0037], [0053]-[0060], [0063]-[0064], FIGS. 3-5, 7. Further, the Avendano Priority Application discloses “generating a forward-facing cardioid pattern and a backward-facing cardioid pattern based on the sub-band signals.” APPLE-1007, [0010]-[0011], [0029]-[0037], [0053]-[0061], [0063]-[0064], FIGS. 3-7. Further, the Avendano Priority Application discloses “generating a forward-facing cardioid pattern and a backward-facing cardioid pattern based on the sub-band signals.” APPLE-1007, [0010]-[0011], [0029]-[0037], [0053]-[0061], [0063]-[0064], FIGS. 3-7. Further, the Avendano Priority Application discloses “outputting a noise suppressed signal.” APPLE-1007, [0011], [0038]-[0052], [0065]-[0071], FIGS. 3-5, 7, 8.

VII. GROUND 1: CLAIMS 29-31, 33-37, AND 41-44 ARE RENDERED OBVIOUS BY AVENDANO '880 IN VIEW OF HOU

A. Combination of Avendano '880 and Hou

86. As detailed below, a POSITA would have found it obvious to combine Avendano '880 and Hou.

Motivations for Combining Avendano ''880 and Hou

87. A POSITA would have been motivated to combine Avendano '880 with Hou for several reasons.

88. Both Avendano '880 and Hou come from the same field of endeavor of enhancing speech and attenuating noise. APPLE-1005, Abstract, 1:24-26, 3:13-26, 3:42-60; APPLE-1008, Abstract, 2:44-52, 4:40-49.

89. Further, both Avendano '880 and Hou describe enhancing speech and attenuating noise using similar techniques, including (i) capturing signals from at least two physical microphones, and (ii) processing these signals in various ways, including equalizing the signal levels of two signals and generating directional signals based on the equalized signals.

90. For example, as I explain in Section VI(A) (incorporated herein), Avendano '880's "audio device 104" includes at least a "primary microphone 106" and a "secondary microphone 108," each of which may be an "omni-directional microphone." APPLE-1005, 3:27-35. Further, Avendano '880's "primary microphone 106 is much closer to [an] audio source 102 than the secondary

microphone 108." *Id.* Due to this configuration, "the intensity level is higher for the primary microphone 106 resulting in a larger energy level during a speech/voice segment." *Id.*

91. Avendano '880 disclose that a "DMA module 302" applies "gain factor, g" to a second signal to account for the differences in intensity levels. *Id.,* 5:36-39, 9:54-59, FIGS. 4a-4b. In particular, "[t]he gain factor, g, is computed by the gain module 406 to equalize the signal levels" of the first and second signals. *Id.*, 5:36-37. As Avendano '880 explains, this equalization is beneficial, as "systems can suffer loss of performance when the microphone signals have different levels." *Id.* 5:37-39.

92. Further, Avendano '880's "DMA module 302" uses the equalized signal to generate directional signals, such as a "cardioid primary signal (C_f)" having a directional pattern for receiving sounds "within a front cardioid region around the audio device 104" and a "cardioid secondary signal (C_b)" signal having a directional pattern for receiving sounds "within a back cardioid region around the audio device 104." *Id.,* 4:41-52, 5:25-35, FIGS. 4a-4b, 6.

93. Hou describes enhancing speech and attenuating noise using similar techniques as those described by Avendano '880. For example, as I explain in Section VI(B) (incorporated herein), Hou describes that the "two-microphone directional processing system 500" shown in Figure 5 serves a similar function as

Avendano ’880’s “DMA module 302,” namely “compensat[ing] (or correct[ing]) for the relative difference in sensitivity between ... mismatched first and second microphones.” APPLE-1008, 5:47-50. Similarly, like Avendano ’880, Hou explains that such a compensation or correction is beneficial, as “[t]he sensitivity of the microphones of the sound pick up system must be matched in order to achieve good directionality.” *Id.,* 1:48-2:2. For example, as Hou explains, “[w]hen the sensitivities of the microphones are not properly matched, then the directionality is substantially degraded and thus the ability to suppress interference coming from a particular direction is poor.” *Id.*, 1:50-2:2.

94. Further, like Avendano ’880, Hou processes the compensated or corrected signal to generate a directional signal (*e.g.,* “an output signal ... hav[ing] robust directionality”) to aid in “directional noise suppression.” *Id.,* 5:50-56, 9:28-41.

95. A POSITA would have recognized that Avendano ’880 teaches the importance of equalizing signal levels of signals generated by two respective microphones, and that Hou discloses a specific “system 500” for performing precisely this function. Accordingly, a POSITA would have been motivated to implement Hou’s signal compensation or correction components in Avendano ’880 to further improve the equalization of the signal output by the microphones (*e.g.,* to generate a signal “hav[ing] robust directionality” and to enhance “directional noise suppression”). *Id.,* 5:50-56, 9:28-41.

96. Specifically, a POSITA would have incorporated aspects of Hou's "system 500" into Avendano '880's "DMA module 302" to compensate (or correct) for the relative difference in sensitivity between ... mismatched first and second microphones" in order to generate a signal "hav[ing] robust directionality" in a backwards direction (*e.g.,* to improve the directionality of Avendano '880's rear-facing cardioid secondary signal). APPLE-1008, 5:25-56.

97. Further, a POSITA would have found it obvious to implement Hou's "system 500" in conjunction with Avendano '880's "gain factor, g." For instance, a POSITA would have recognized that Avendano '880's "gain factor, g" and Hou's "system 500" are configured to equalize the signal levels of microphone signals at different respective stages in a signal processing operation. APPLE-1005, 5:36-39, 9:54-59, FIGS. 4a-4b; APPLE-1008, 5:17-6:22, FIG. 5. Further, a POSITA would have recognized that the combination of the two would provide benefits that may not be obtained with either of the two alone. APPLE-1005, 5:36-39, 9:54-59, FIGS. 4a-4b; APPLE-1008, 5:17-6:22, FIG. 5.

98. For instance, a POSITA would have recognized that Avendano '880's "gain factor, g" is configured to perform signal equalization at an initial stage of a signal processing operation, in particular prior to performing any other signal processing tasks. APPLE-1005, 5:36-39, 9:54-59, FIGS. 4a-4b. Thus, Avendano '880's "gain factor, g" would be suitable for performing an initial signal compensation or

correction for two microphone signals, in order to account for a general "loss of performance when the microphone signals have different levels." APPLE-1005, 5:36-39.

99. Further, a POSITA would have recognized that Hou's "system 500" is configured to perform a signal equalization at a late stage of a signal processing operation, (for example, just prior to combining two signals together to create a combined signal having "robust directionality"), specifically based on the estimated minimums of the signals. Thus, Hou's "system 500" would be suitable for performing an additional signal compensation or correction for two microphone signals, such that the directionality of a combination of the two signals is enhanced. APPLE-1008, 5:17-6:22, FIG. 5.

100. Two example modifications to Avendano '880's system, based on the teachings in Hou, are described below.

<u>First Example Modification</u>

101. As a first example modification, a POSITA would have incorporated aspects of Hou's system (*e.g.,* "delay unit 506," "first minimum estimate unit 508," "second minimum estimate unit 510," "divide unit 512," and "multiplication unit 514" into Avendano '880's system to enhance the signal equalization functionality of Avendano '880's system. Further, a POSITA would have incorporated Hou's

subtraction unit 516" into Avendano '880's system to generate a signal having "robust directionality" in a backwards direction. APPLE-1008, 5:50-56.

102. In particular, Avendano '880's signal x_2 (e.g., to which Avendano '880's "gain factor, g" is applied) would be processed by Hou's "minimum estimate unit 508" (*e.g.,* along Hou's upper signal pathway). *Id.*

103. Further, Avendano '880's signal x_1 would be input into Hou's system 500 along the lower signal pathway. APPLE-1008, 5:32-39, FIG. 5. In turn, Avendano '880's signal x_1 would be processed by Hou's "delay unit 506" and "minimum estimate unit 510." *Id.*

104. Further, Hou's "divide unit 512" would calculate a gain as the quotient of the output of "first minimum estimate unit 508" and the output of "second minimum estimate unit 510." APPLE-1008, FIG. 5:42-43; FIG. 5. Further still, the calculated gain would be applied to Avendano '880's signal x_1 by "multiplication unit 514" to generate a compensated signal. APPLE-1008, 5:42-50, FIG. 5.

105. For example, as shown below, Avendano '880's system would provide first and second signals to Hou's lower and upper signal pathways, respectively:

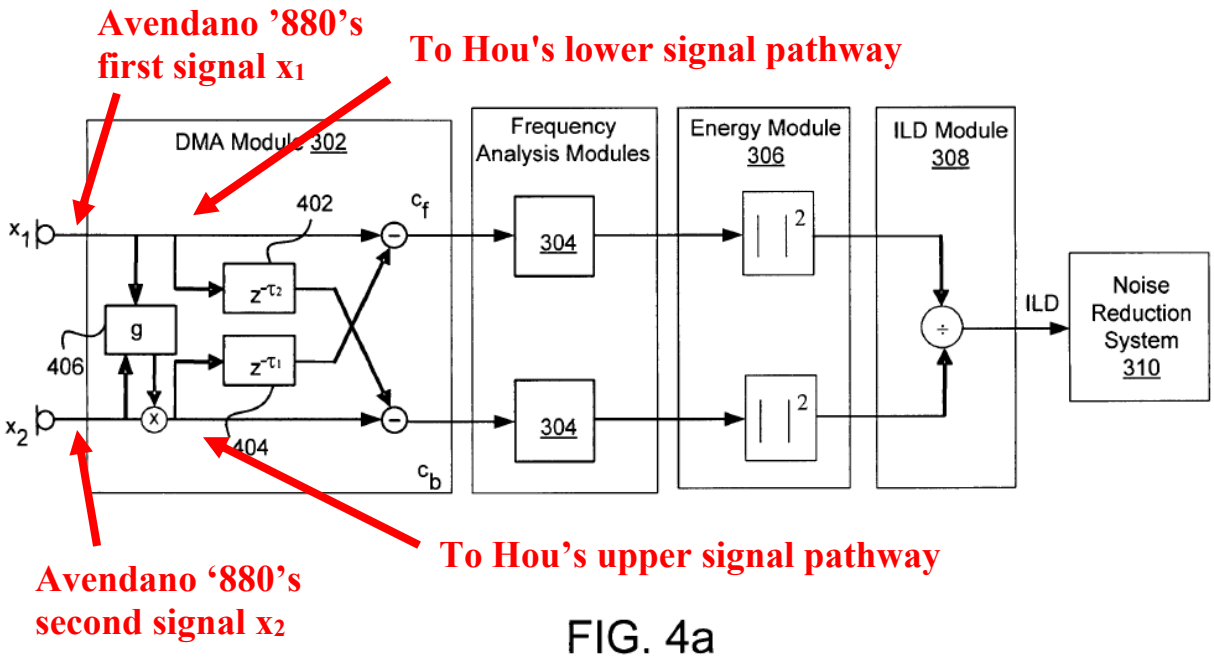

FIG. 4a

APPLE-1005, FIG. 4a (annotated)

106. Further, as shown below, Hou's system would calculate a gain based on the received signals and generate a compensated signal using the calculated gain":

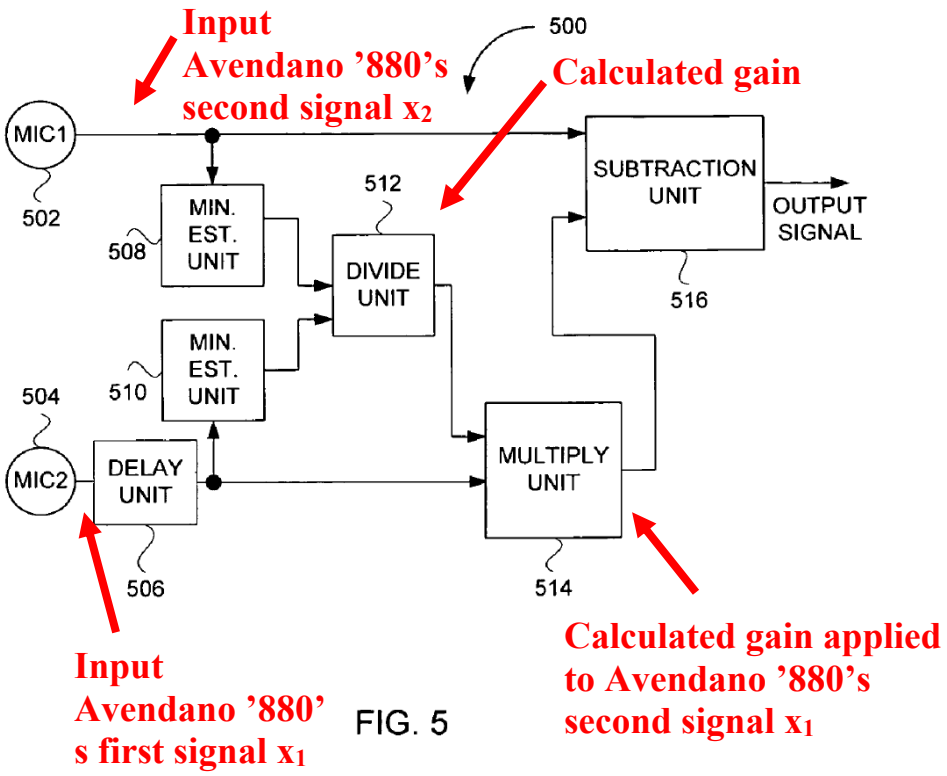

APPLE-1008, FIG. 5 (annotated)

107. Although Hou multiplies one of the signals by the calculated gain, a similar equalization effect could be achieved by multiplying the other signal by the inverse of the calculated gain.

108. Further, Hou's "subtraction unit 516" would subtract Avendano '880's first signal x_1 (having been delayed by the "delay unit 506" and compensated by the calculated gain) from Avendano '880's secondary signal x_2. APPLE-1008, 5:49-56, FIG. 5. The resulting signal would have "robust directionality" in a backwards direction. APPLE-1008, 5:52-56.

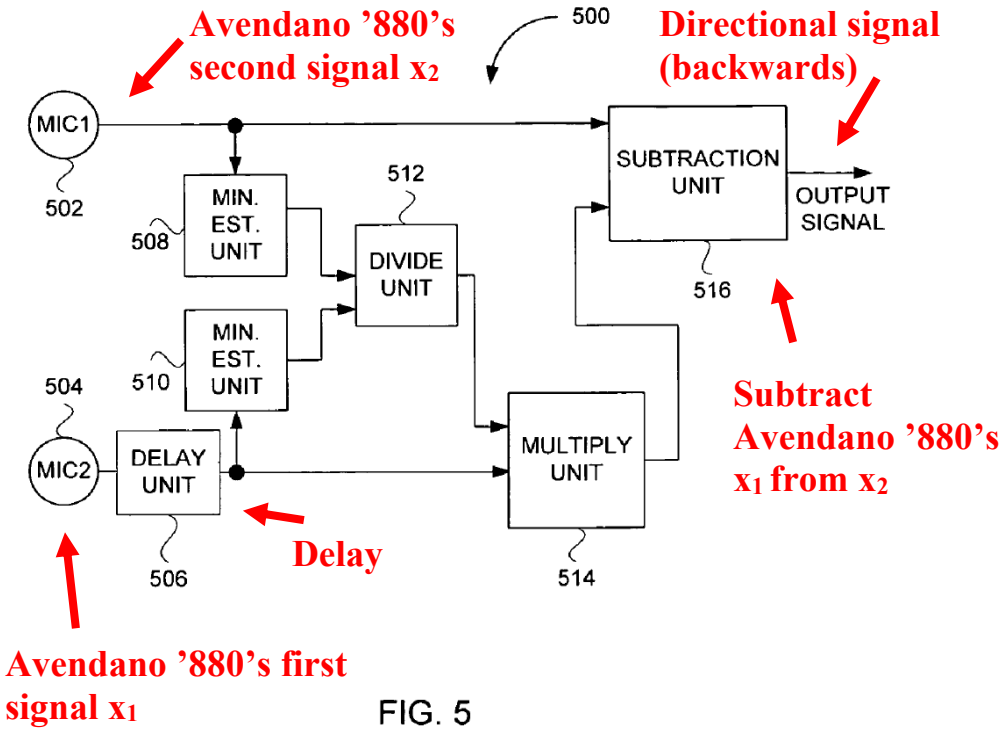

FIG. 5

APPLE-1008, FIG. 5 (annotated)

109. This is analogous to Avendano '880's system in which Avendano '880's first signal x_1 (having been delayed by the "delay node 402") is subtracted from Avendano '880's secondary signal x_2 to generate a "cardioid secondary signal" directed to the back of "audio device 104." APPLE-1005, 5:15-35, FIG. 4a, 6.

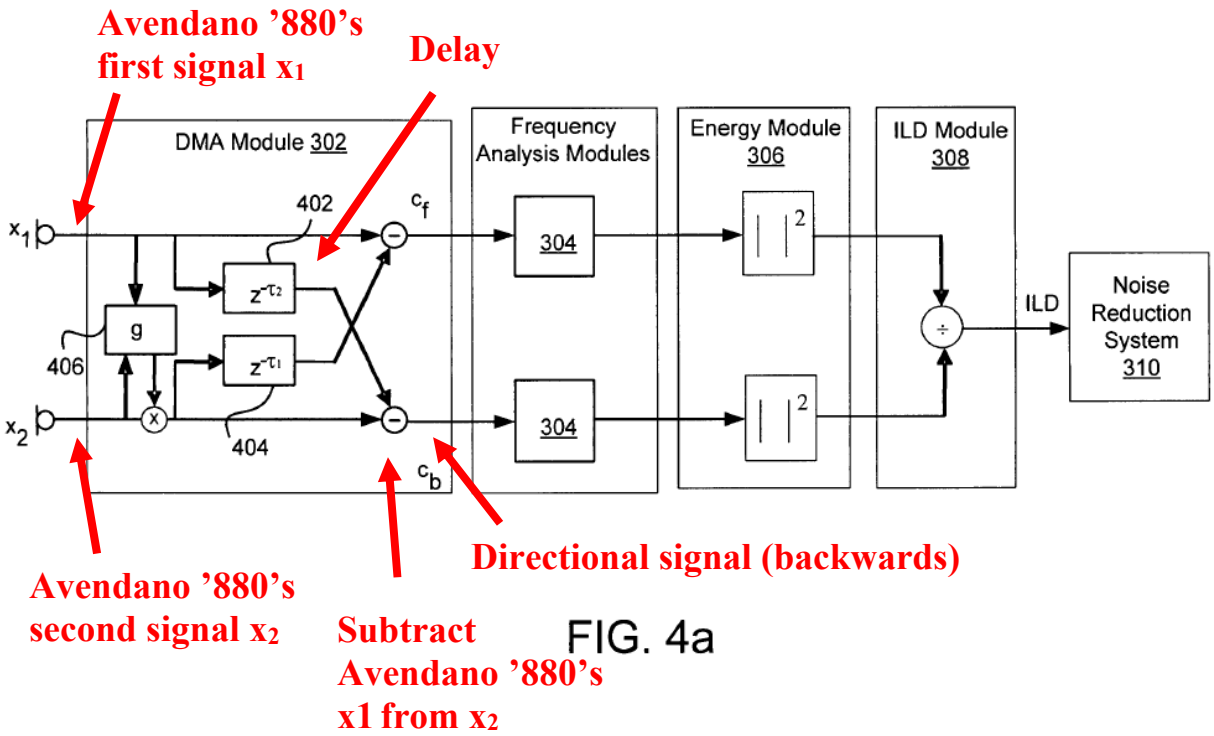

APPLE-1005, FIG. 4a (annotated)

110. Further, as I discussed above, configuring Avendano '880's "gain factor, g" and Hou's "system 500" to equalize the signal levels of microphone signals at different respective stages in a signal processing operation would provide benefits that may not be obtained with either of the two alone. For example, combining Avendano '880 and Hou in this manner would both account for a general "loss of performance when the microphone signals have different levels" at an initial stage of the signal processing operation, and also provide a finer-tuning of the gain prior to the combination of the signals, and to specifically enhance the directionality of the combined microphone signals at the late stage of the signal processing operation. APPLE-1005, 5:36-39; APPLE-1008, 5:17-6:22, FIG. 5.

Second Example Modification

111. As a second example modification, a POSITA would have incorporated Hou's "delay unit 506," "first minimum estimate unit 508," "second minimum estimate unit 510," and "divide unit 512" into Avendano '880's system to enhance the signal equalization functionality of Avendano '880's system.

112. In particular, a POSITA would have recognized that Hou teaches equalizing signals (*e.g.,* using "multiplication unit 514) immediately prior to subtracting one signal from the other (*e.g.,* using "subtraction unit 516") to produce a directional signal. APPLE-1008, 5:45-56, FIG. 5.

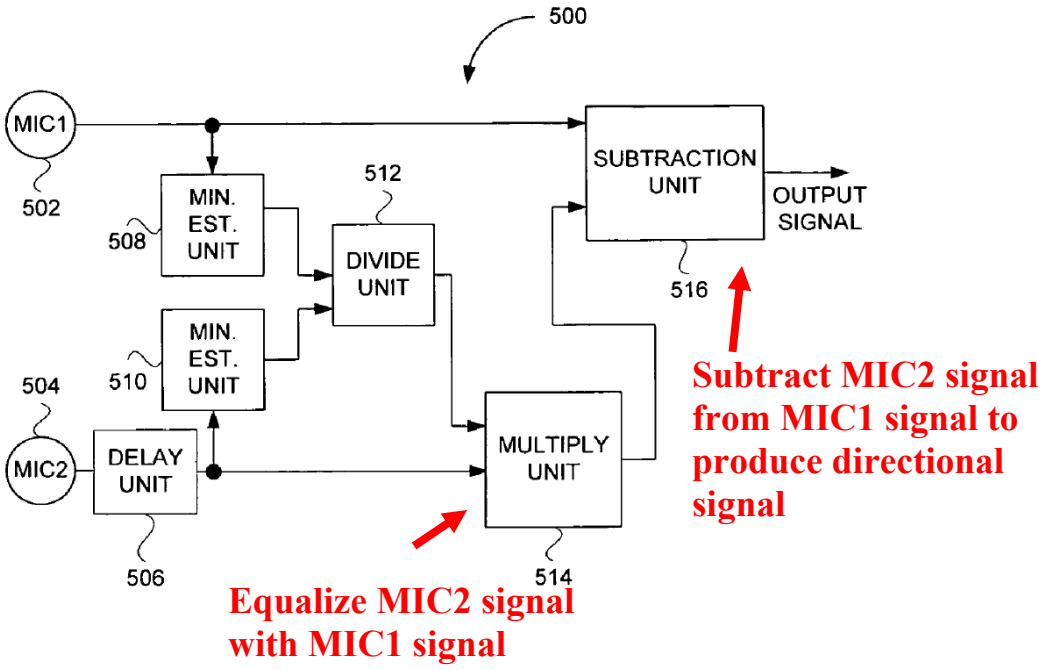

FIG. 5

APPLE-1008, FIG. 5 (annotated)

113. In view of Hou, a POSITA would have found it obvious to modify Avendano '880's system to include filters that equalize Avendano '880's signals with one another immediately prior to subtracting one signal from the other to produce respective directional signals.

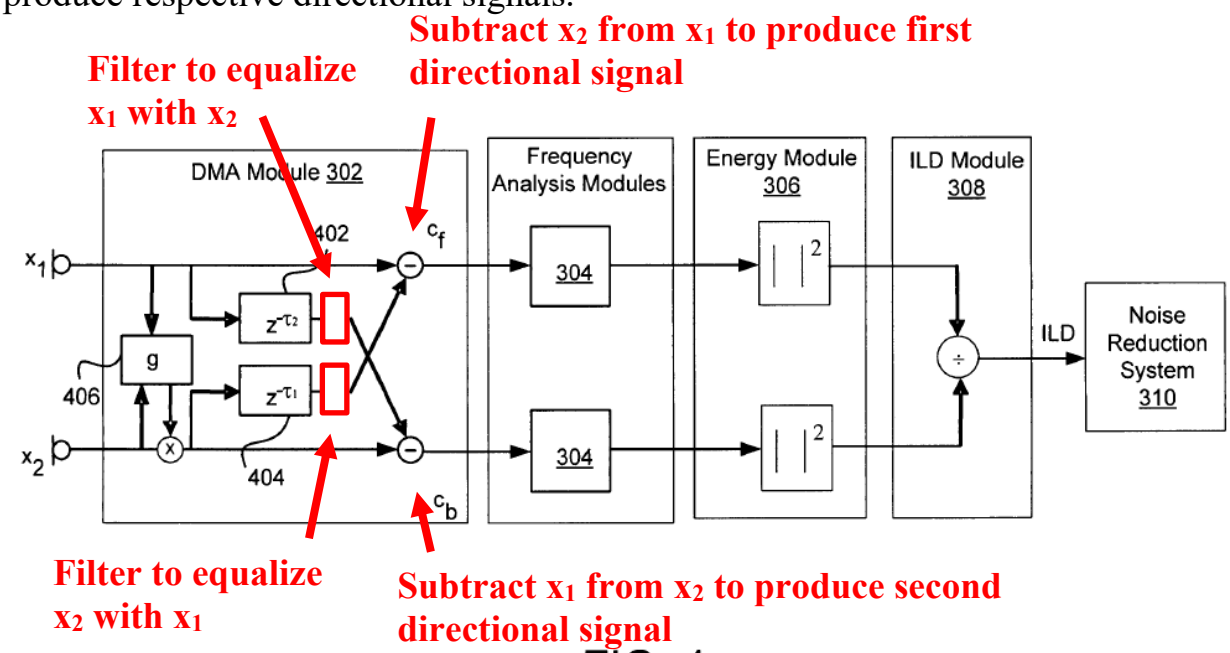

FIG. 4a

APPLE-1005, FIG. 4a (modified)

114. Further a POSITA would have found it obvious to implement such filters using Hou's "delay unit 506," "first minimum estimate unit 508," "second minimum estimate unit 510," "divide unit 512," and "multiplication unit 514."

115. For example, to generate a filter to equalize Avendano '880's signal x_2 with Avendano '880's signal x_1, Avendano '880's signal x_2 (*e.g.*, to which Avendano '880's "gain factor, g" is applied) would be input into Hou's system 500

along the upper signal pathway. APPLE-1008, 5:36-38, FIG. 5. In turn, Avendano '880's signal x_2 would be processed by Hou's "minimum estimate unit 508." *Id.*

116. Further, Avendano '880's signal x_1 would be input into Hou's system 500 along the lower signal pathway. APPLE-1008, 5:32-39, FIG. 5. In turn, Avendano '880's signal x_1 would be processed by Hou's "delay unit 506" and "minimum estimate unit 510." *Id.*

117. Further, Hou's "divide unit 512" would calculate a gain as the quotient of the output of "first minimum estimate unit 508" and the output of "second minimum estimate unit 510." APPLE-1008, FIG. 5:42-43; FIG. 5. Further still, the calculated gain would be applied to Avendano '880's signal x_1 by "multiplication unit 514" to generate a first compensated signal. APPLE-1008, 5:42-50, FIG. 5.

118. For example, as shown below, Avendano '880's system would provide first and second signals to Hou's lower and upper signal pathways, respectively:

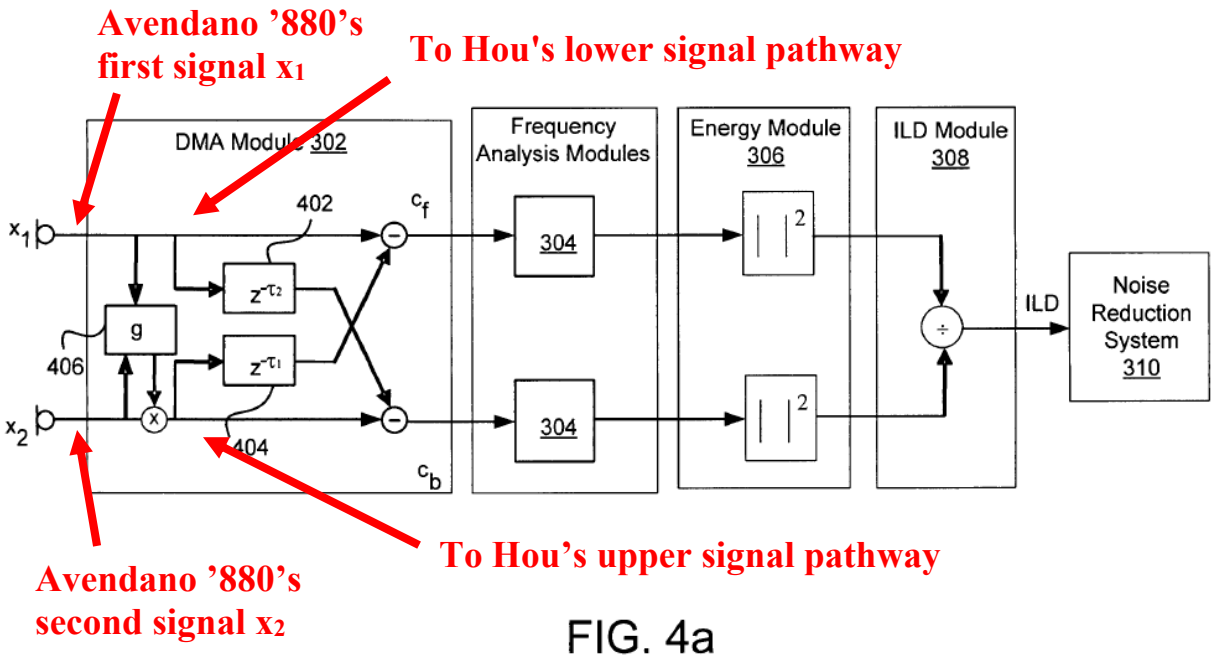

FIG. 4a

APPLE-1005, FIG. 4a (annotated)

119. Further, as shown below, Hou's system would calculate a gain based on the received signals and generate a compensated signal using the calculated gain":

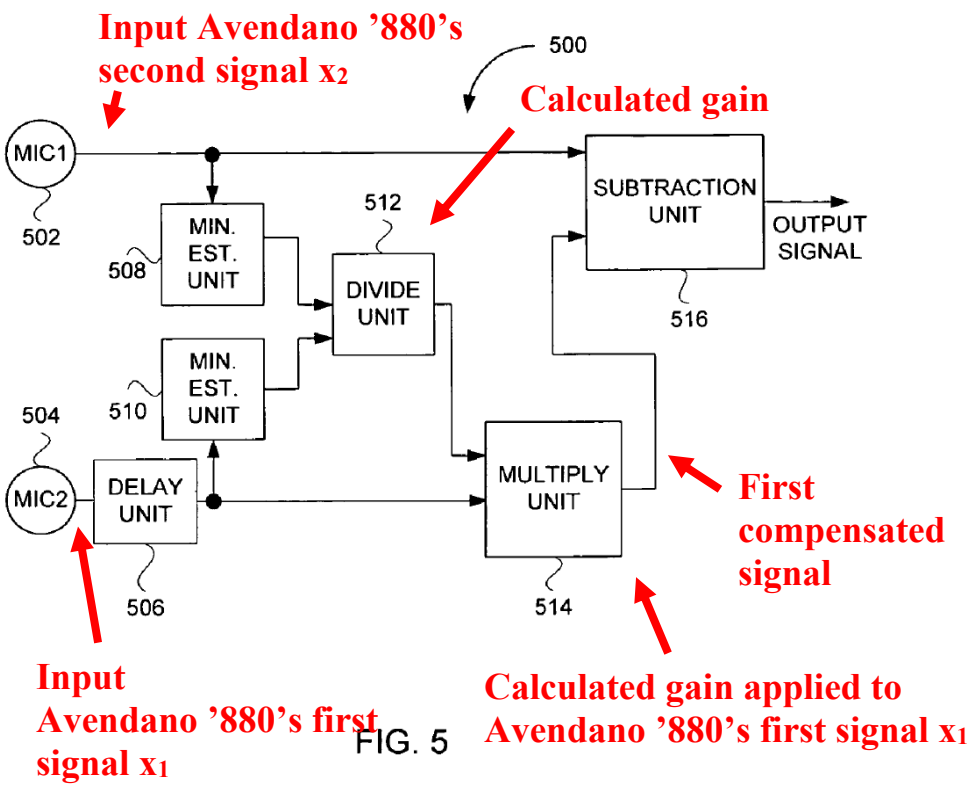

APPLE-1008, FIG. 5 (annotated)

120. The first compensated signal would be used to generate Avendano '880's "cardioid secondary signal (C_b)." APPLE-1005, 5:15-35, FIG. 4a. Specifically, Avendano '880's "cardioid secondary signal (C_b)" would be generated by subtracting the first compensated signal from Avendano '880's signal x_2). *Id.*

121. Further, a POSITA would have recognized that the inverse of the calculated gain could be used to generate a filter to equalize Avendano '880's signal x_1 with Avendano '880's signal x_2. For example, the inverse of the calculated gain would be applied to Avendano '880's signal x_2 (*e.g.,* by another "multiplication unit 514") to generate a second compensated signal. APPLE-1008, 5:45-47, FIG. 5.

The second compensated signal would be used to generate Avendano '880's "cardioid primary signal (C_f) (*e.g.,* by subtracting the second compensated signal from Avendano '880's signal x_1). APPLE-1005, 5:15-35, FIG. 4a.

Reasonable Expectation of Success

122. In each of these example modifications, a POSITA would have had a reasonable expectation of success in incorporating Hou's "system 500" in Avendano '880's system given the similarities between Avendano '880's "DMA module 302" and Hou's "system 500."

123. For example, Avendano '880's "DMA Module 302" and Hou's "system 500" receive similar input signals (*e.g.,* from two microphones), and generate similar outputs (*e.g.,* directional signals). APPLE-1005, 4:20-54; 5:15-39; 9:53-64, FIGS. 4a-4b; APPLE-1008, 4:40-6:22, FIG. 5.

124. Further, Avendano '880's "DMA Module 302" and Hou's "system 500" generate outputs in a similar manner (*e.g.,* by generating "equalized" or "compensated" signals, and subtracting one of the signals from the other). APPLE-1005, 4:20-54; 5:15-39; 9:53-64, FIGS. 4a-4b; APPLE-1008, 5:25-56.

125. Given these similarities, limited modifications would have been necessary to incorporate Hou's "system 500" into Avendano '880's system and other operations in Avendano '880's system would not have been impacted by the combination.

126. Thus, the combination of Avendano ’880 and Hou would have been well within the grasp of a POSITA and a POSITA would have had a reasonable expectation of success in making the combination.

B. Claim 29

[29pre]: A method comprising:

127. To the extent the preamble of claim 1 is limiting, Avendano ’880 discloses a method. APPLE-1005, FIGS. 1a-7, 3:12-7:9, 9:43-10:25 (“an exemplary method for utilizing ILD of omni-direction microphones for noise suppression and speech enhancement.”).

[29a]: forming a first virtual microphone

128. Avendano ’880 describes forming a first virtual microphone.

129. In Avendano ’880, the first virtual microphone is “cardioid primary signal (C_f).” APPLE-1005, 4:20-6:10, FIGS. 4a-4b. This first virtual microphone is formed as a combination of “primary acoustic signal (X_1)” and “secondary acoustic signal (X_2).” *Id.*

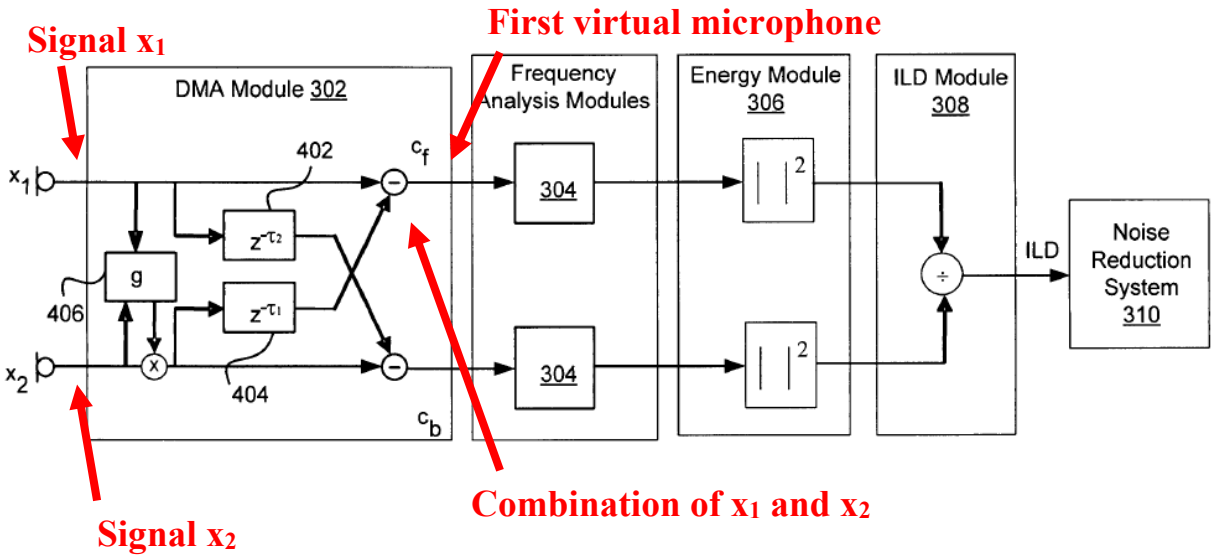

FIG. 4a

APPLE-1005, FIG. 4a (annotated)

In exemplary embodiments, a cardioid primary signal (C_f) is mathematically determined in the frequency domain (Z transform) as

$$C_f = X_1 - z^{-\tau 1} g X_2$$

First virtual microphone

Signal x2

Signal x1

APPLE-1005, 5:25-30 (annotated)

[29b]: forming a filter by generating a first quantity by applying a calibration to a second signal of a second physical microphone, generating a second quantity by applying the delay to a first signal of a first physical microphone, and forming the filter as a ratio of the first quantity to the second quantity

130. The combination of Avendano '880 and Hou would include forming a filter by generating a first quantity by applying a calibration to a second signal of a

second physical microphone, generating a second quantity by applying the delay to a first signal of a first physical microphone, and forming the filter as a ratio of the first quantity to the second quantity.

131. In Avendano '880, the first physical microphone is "primary microphone 106" and the second physical microphone is "secondary microphone 108." APPLE-1005, 3:27-55, 4:20-27, FIGS. 1a-1b.

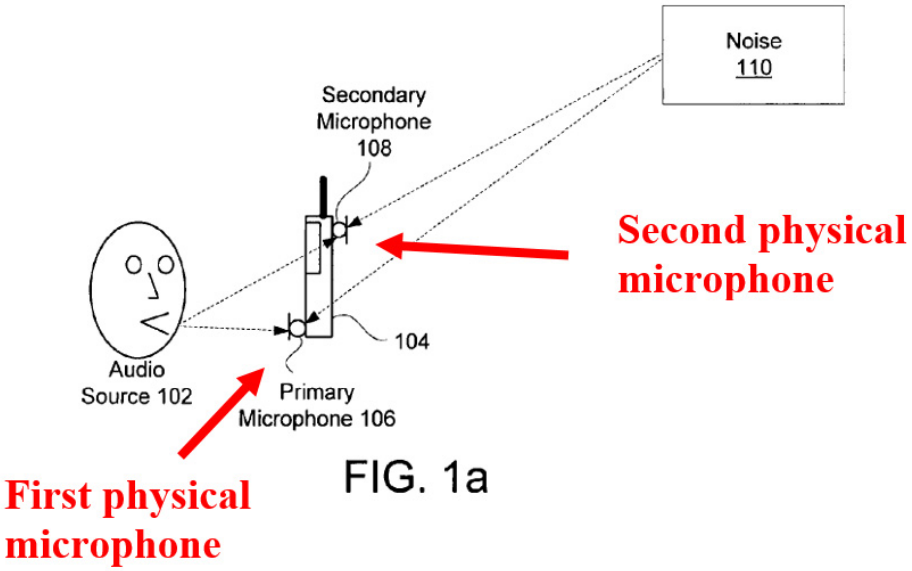

APPLE-1005, FIG. 1a (annotated)

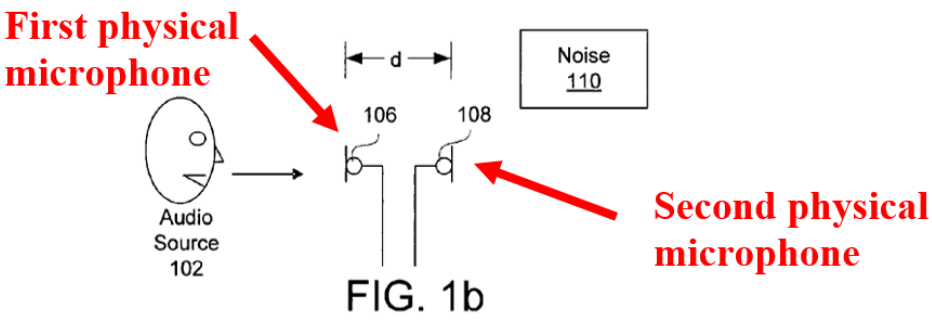

APPLE-1005, FIG. 1b (annotated)

132. Further, in Avendano '880, the first signal is "primary acoustic signal (X_1)" and the second signal is "secondary acoustic signal (X_2)." APPLE-1005, 4:20-27, FIGS. 4a-4b.

133. Further, as I explain in Section VII(A) (incorporated herein), in the combination of Avendano '880 and Hou, Hou's "system 500" would form a filter based on Avendano '880's first signal x_1 and second signal x_2 (*e.g.,* from Avendano '880's first physical microphone 106 and second physical microphone 108, respectively).

134. For example, a calibration would be applied to the second signal x_2 using Avendano '880's "gain factor, g" and/or multiplexer. APPLE-1005, 5:36-39, 9:54-59, FIGS. 4a-4b. The calibrated second signal x_2 would be subsequently processed to generate a "first quantity" (*e.g.,* by processing the calibrated second signal x_2 using Hou's "first minimum estimate unit 508"). APPLE-1008, 5:36-38, FIG. 5.

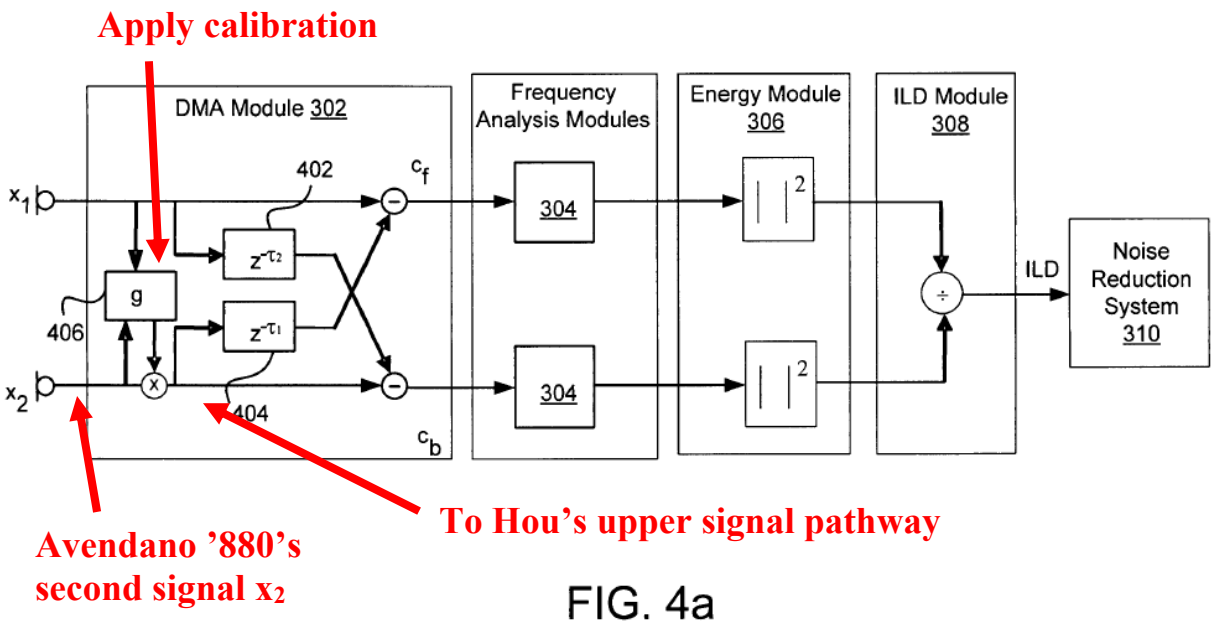

FIG. 4a

APPLE-1005, FIG. 4a (annotated)

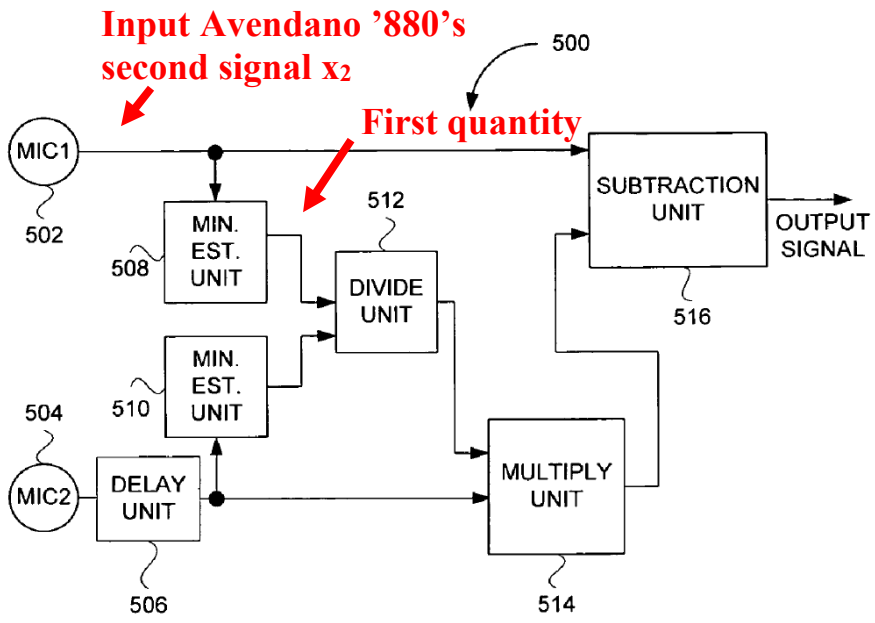

FIG. 5

APPLE-1008, FIG. 5 (annotated)

135. In addition, a calibration also would be applied to the second signal x_2 by Hou's "first minimum estimate unit 508" to generate a first quantity. APPLE-1008, 5:36-38, FIG. 5.

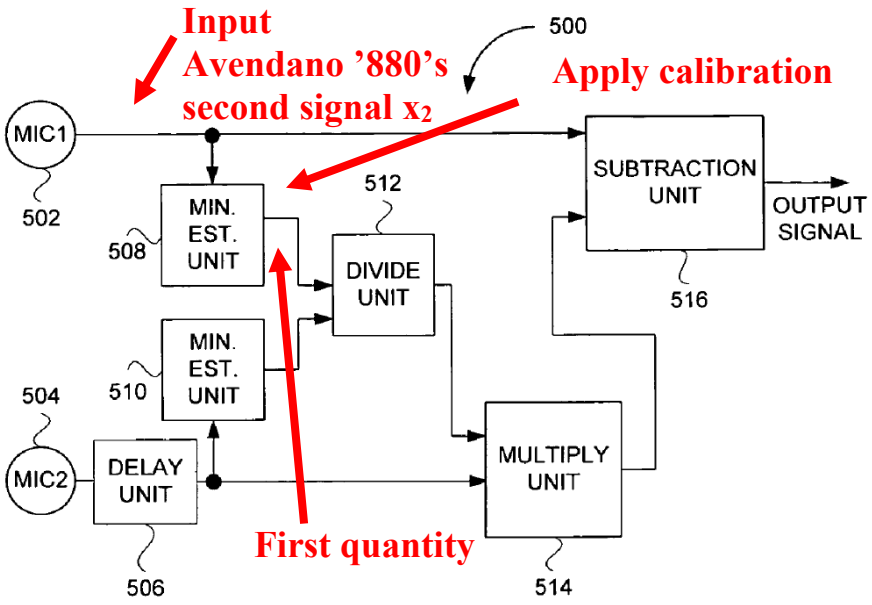

FIG. 5

APPLE-1008, FIG. 5 (annotated)

136. Further, Hou's "delay unit 506" would receive Avendano '880's first signal x_1, and apply a delay to that first signal x_1 to generate a second quantity. Section VII(A); APPLE-1008, 5:32-33, FIG. 5.

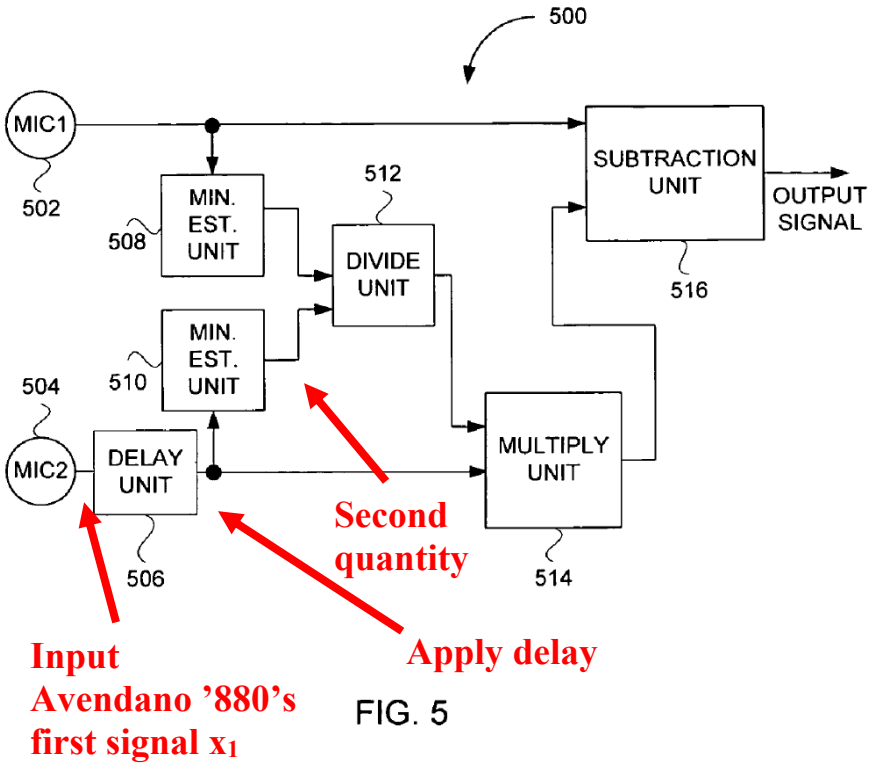

APPLE-1008, FIG. 5 (annotated)

137. Further, Hou's "divide unit 512" forms a filter as a ratio of the first quantity to the second quantity. Section VII(A); APPLE-1008, 5:42-45, FIG. 5. In particular, Hou's "divide unit 512 produces a quotient by dividing the first minimum estimate by the second minimum estimate," "[t]he quotient represent[ing] a scaling amount that is sent to a multiplication unit 514." APPLE-1008, 5:42-45.

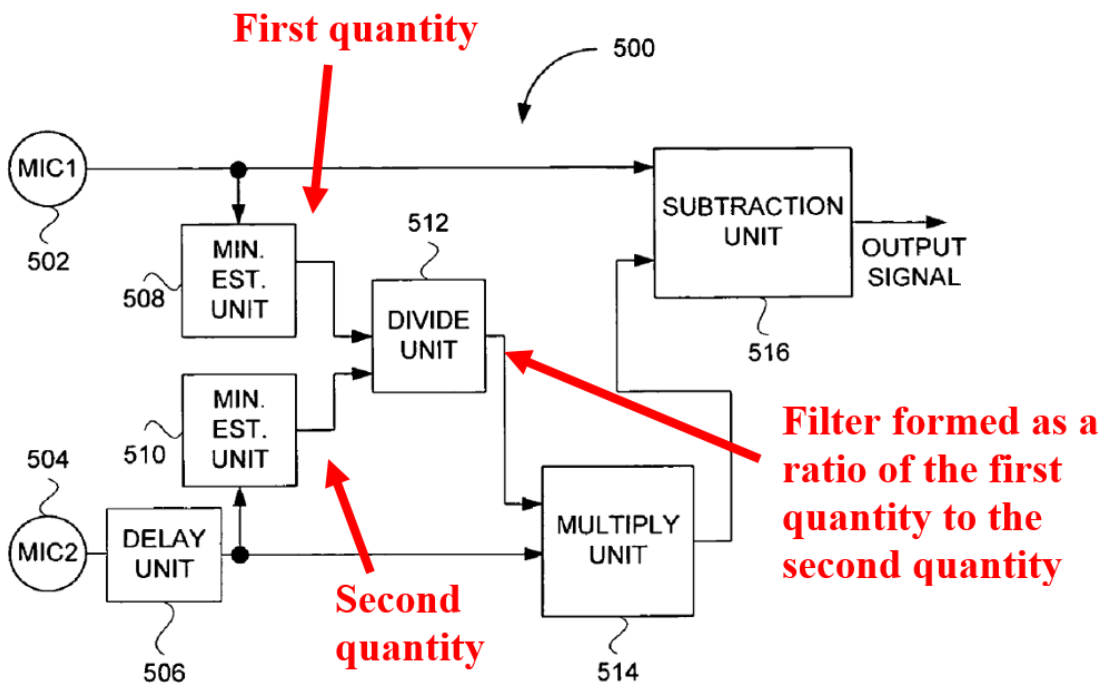

APPLE-1008, FIG. 5 (annotated)

[29c]: forming a second virtual microphone by applying the filter to the first signal to generate a first intermediate signal, and summing the first intermediate signal and the second signal

138. The combination of Avendano '880 and Hou would include forming a second virtual microphone by applying the filter to the first signal to generate a first intermediate signal, and summing the first intermediate signal and the second signal.

139. As I explain in Section VII(A) (incorporated herein), a POSITA would have found it obvious to perform at least two example modifications to

Avendano ’880’s system, based on the teachings in Hou. Each of these example modifications is described below.

First Example Modification

140. In a first example combination of Avendano ’880 and Hou, Hou’s “divide unit 512” forms a filter as a ratio of the first quantity to the second quantity. Section VII(A), First Example Modification; Section VII(B), [29b]; APPLE-1008, 5:42-45, FIG. 5. This filter is applied to Avendano ’880’s first signal by “multiplication unit 514” to generate a first intermediate signal. Section VII(A), First Example Modification; APPLE-1008, 5:43-49, FIG. 5.

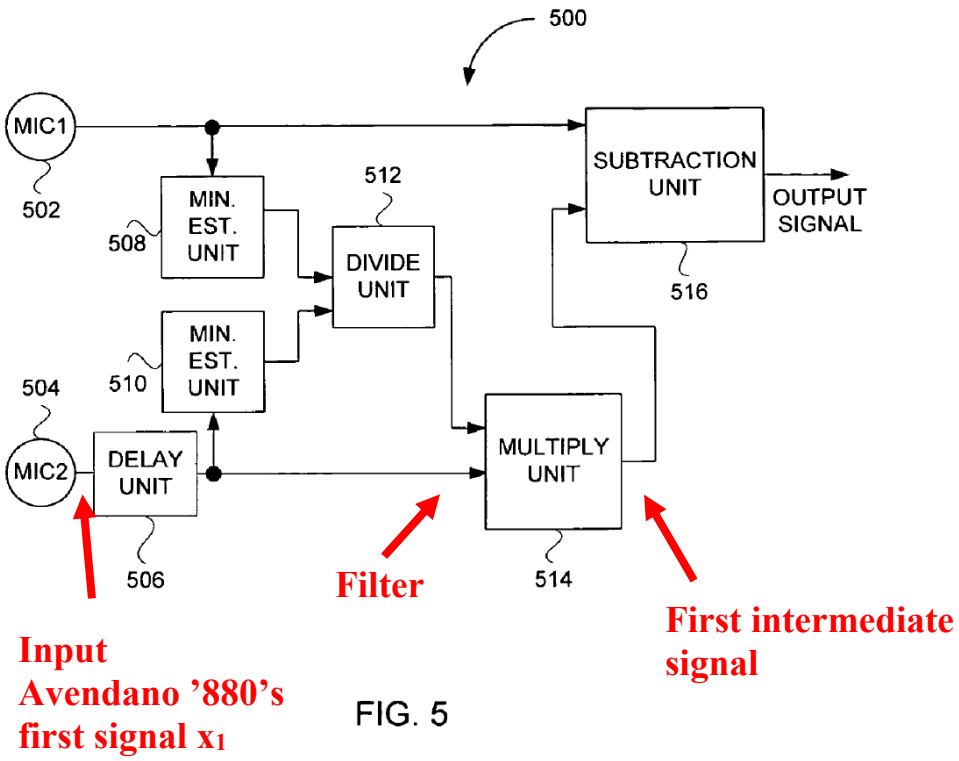

APPLE-1008, FIG. 5 (annotated)

141. Further, a second virtual microphone ("output signal") is generated by subtracting the first intermediate signal from Avendano '880's second signal using "subtraction unit 516." Section VII(A), First Example Modification; APPLE-1008, 5:50-56, FIG. 5.

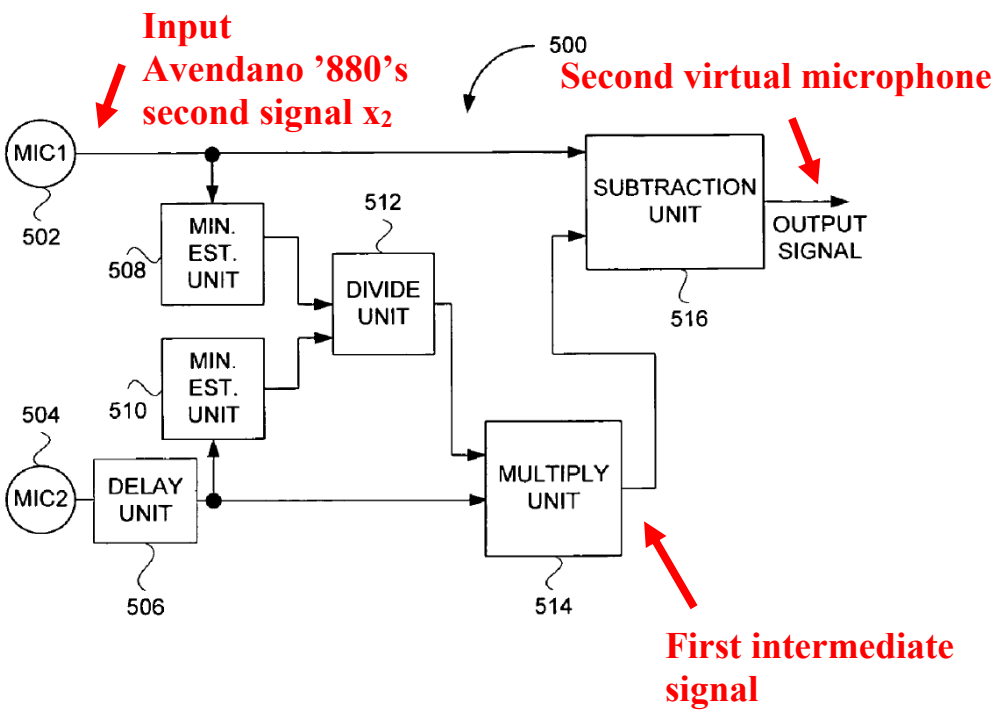

FIG. 5

APPLE-1008, FIG. 5 (annotated)

142. The second virtual microphone ("output signal") would have "robust directionality" in a backwards direction. Section VII(A), First Example Modification; APPLE-1008, 5:50-56, 9:28-41.

143. This is analogous to Avendano '880's system in which Avendano '880's first signal x_1 (having been delayed by the "delay node 402") is subtracted from

Avendano '880's secondary signal x_2 to generate a directional second virtual microphone ("cardioid secondary signal") facing the backwards direction. Section VII(A), First Example Modification; APPLE-1005, 5:15-35, FIG. 4a.

144. This subtraction is mathematically the equivalent of summing (i) Avendano '880's second signal, and (ii) the inverse of the first intermediate signal.

145. This is also consistent with the '611 patent, which describes that "processing paths" are "summed to form virtual microphones," and that "varying the magnitude and <u>sign</u> of the delays and gains of the processing paths leads to a wide variety of virtual microphones." APPLE-1001, 21:26-52, FIGS. 25-26.

146. Further, FIG. 3 of the '611 patent indicates that a summation (signified by "Σ") includes summing a first value with the inverse of a second value (signified using a negative sign by an input to "Σ") to form a second virtual microphone V_2 (*i.e.*, subtracting the second value from the first value).

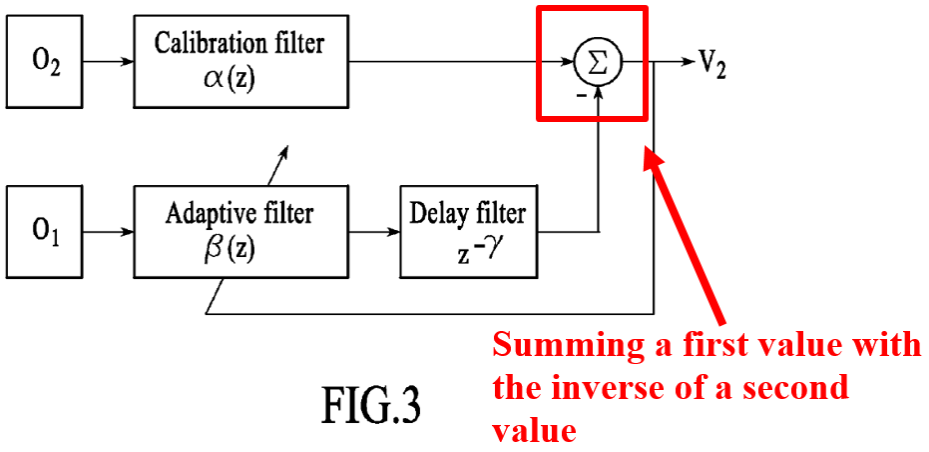

<u>APPLE-1001, FIG. 3 (annotated)</u>

147. Accordingly, as in the ’611 patent, the combination of Avendano ’880 and Hou forms a second virtual microphone by applying the filter to the first signal to generate a first intermediate signal, and summing the first intermediate signal and the second signal.

148. Further, as I explain in Section VII(A), configuring Avendano ’880’s “gain factor, g” and Hou’s “system 500” to equalize the signal levels of microphone signals at different respective stages in a signal processing operation would provide benefits that may not be obtained with either of the two alone. For example, combining Avendano ’880 and Hou in this manner would not only account for a general “loss of performance when the microphone signals have different levels” at an initial stage of the signal processing operation, but also specifically enhance the directionality of a combination of the microphone signals at the late stage of the signal processing operation. Section VII(A); APPLE-1005, 5:36-39; APPLE-1008, 5:17-6:22, FIG. 5.

<u>Second Example Modification</u>

149. In a second example combination of Avendano ’880 and Hou, Hou’s “divide unit 512” forms a filter (*e.g.,* as a ratio of the first quantity to the second quantity). Section VII(A), Second Example Modification; Section VII(B), [29b]; APPLE-1008, 5:42-45, FIG. 5. This filter is applied to Avendano ’880’s first signal x_1 (*e.g.,* to equalize Avendano ’880’s first signal x_1 with Avendano ’880’s second

signal x_2) to generate a first intermediate signal. Section VII(A), Second Example Modification.

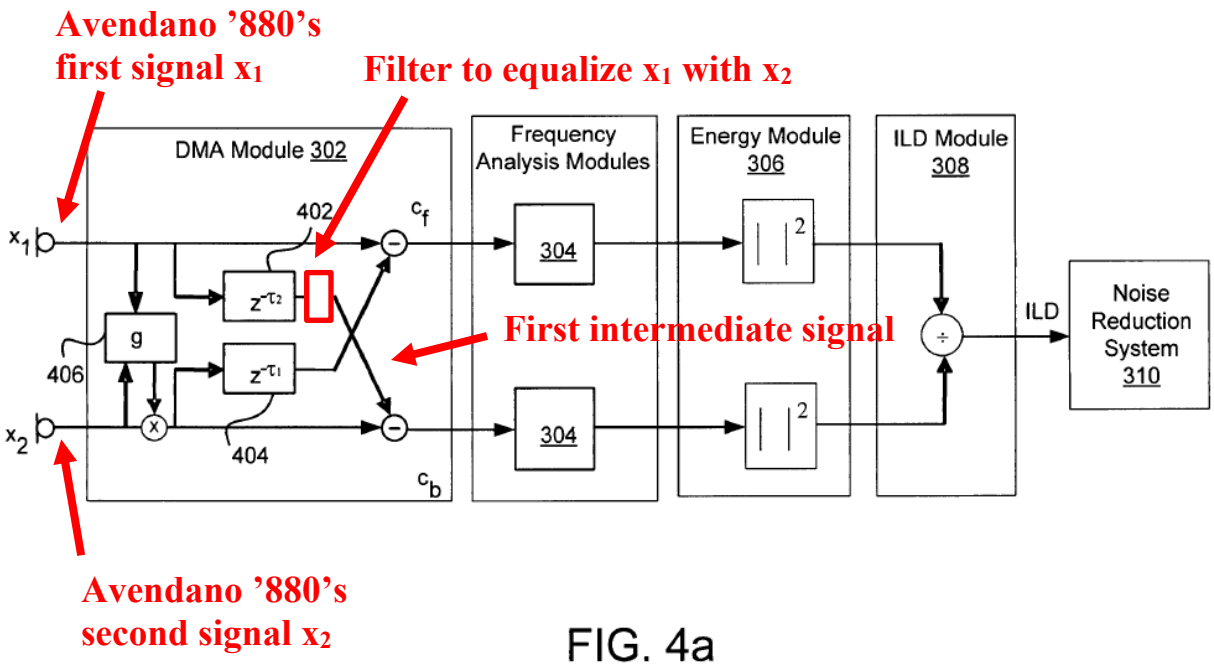

FIG. 4a

APPLE-1005, FIG. 4a (modified)

150. Further, a second virtual microphone is generated by subtracting the first intermediate signal from Avendano '880's second signal. APPLE-1005, 5:15-35, FIG. 4a.

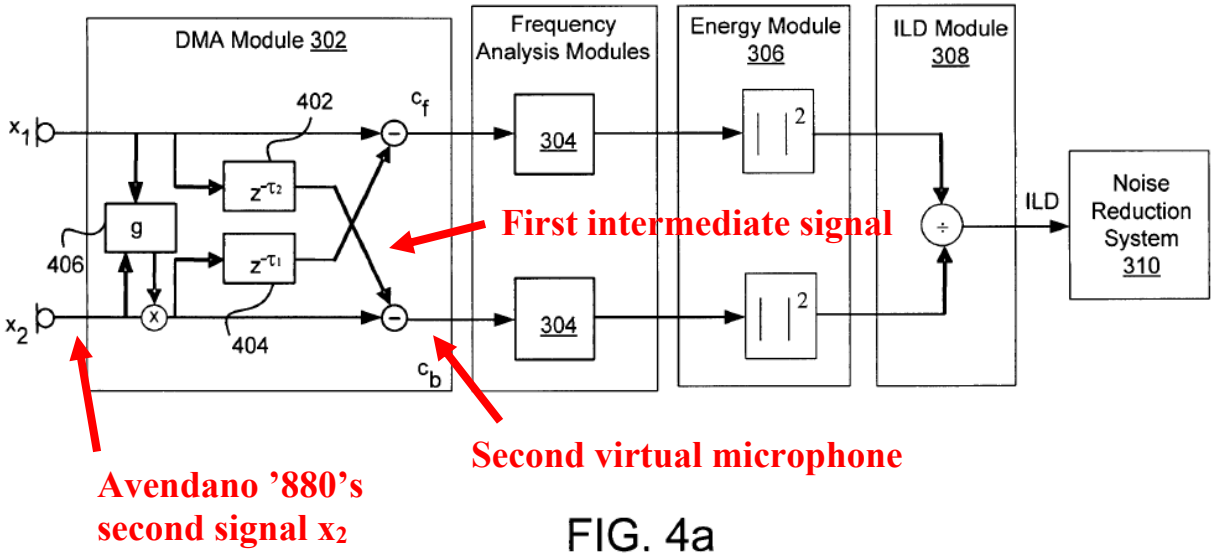

FIG. 4a

APPLE-1005, FIG. 4a

151. This subtraction is mathematically the equivalent of summing (i) Avendano '880's second signal, and (ii) the inverse of the first intermediate signal.

152. As I explain above, this is also consistent with the '611 patent, which describes that "processing paths" are "summed to form virtual microphones," and that "varying the magnitude and sign of the delays and gains of the processing paths leads to a wide variety of virtual microphones." APPLE-1001, 21:26-52, FIGS. 25-26.

153. Further, as I explain above, FIG. 3 of the '611 patent indicates that a summation (signified by "Σ") includes summing a first value with the inverse of a

second value (signified using a negative sign by an input to "Σ") to form a second virtual microphone V_2 (*i.e.*, subtracting the second value from the first value).

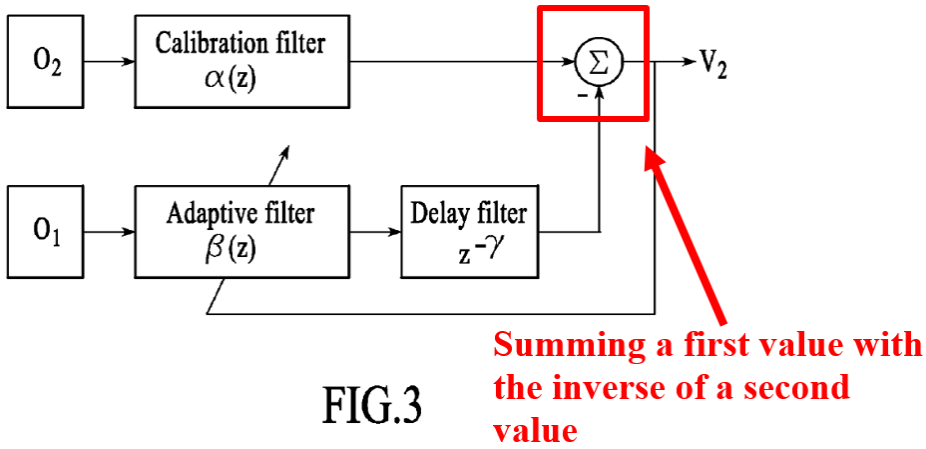

FIG.3

APPLE-1001, FIG. 3 (annotated)

154. Accordingly, as in the '611 patent, the combination of Avendano '880 and Hou forms a second virtual microphone by applying the filter to the first signal to generate a first intermediate signal, and summing the first intermediate signal and the second signal.

155. Further, as I explain in Section VII(A), configuring Avendano '880's "gain factor, g" and Hou's "system 500" to equalize the signal levels of microphone signals at different respective stages in a signal processing operation would provide benefits that may not be obtained with either of the two alone. For example, combining Avendano '880 and Hou in this manner would not only account for a general "loss of performance when the microphone signals have different levels" at an initial stage of the signal processing operation, but also specifically enhance the

directionality of a combination of the microphone signals at the late stage of the signal processing operation. Section VII(A); APPLE-1005, 5:36-39; APPLE-1008, 5:17-6:22, FIG. 5.

[29d]: generating a ratio of energies of the first virtual microphone and the second virtual microphone and detecting acoustic voice activity using the ratio

156. Avendano '880 (and in combination with Hou) discloses generating a ratio of energies of the first virtual microphone and the second virtual microphone and detecting acoustic voice activity using the ratio.

157. Because the first virtual microphone of Avendano '880 (and in combination with Hou) is designed to be oriented towards the expected source of speech, and the second virtual microphone is designed to be oriented away from the expected source of speech, the energy ratio of energies should be large when voice activity is present, and the ratio of energies should be small when voice activity is absent. APPLE-1005, 3:42-55, 4:47-54, 5:15-39, 5:49-7:9, 9:29-42, FIGS. 1a-1b, 6.

158. In Avendano '880, the energy of the first virtual microphone is E_f. *Id.*, 5:49-61. The energy of the virtual microphone is calculated by integrating the square of the signal from the first virtual microphone over time. *Id.*

$$E_f(t, \omega) = \int_{frame} |C_f(t', \omega)|^2 \, dt',$$

Energy of the first virtual microphone

First virtual microphone

APPLE-1005, 5:61 (annotated)

159. Further, the energy of the second virtual microphone is E_b. *Id.,* 5:49-6:5. The energy of the second virtual microphone is calculated by integrating the square of the signal from the second virtual microphone over time. *Id.*

$$E_b(t, \omega) = \int_{frame} |C_b(t', \omega)|^2 \, dt'.$$

Energy of the second virtual microphone

Second virtual microphone

APPLE-1005, 6:5 (annotated)

160. The energy ratio is "Inter-Level Difference" (ILD). The energy ratio ILD is determined by dividing the energy of the first virtual microphone by the energy of the second virtual microphone. *Id.*, 6:8-34.

$$ILD(t, \omega) = \frac{\int_{frame} |C_f(t', \omega)|^2 \, dt'}{\int_{frame} |C_b(t', \omega)|^2 \, dt'}.$$

Energy of the second virtual microphone

Energy of the first virtual microphone

APPLE-1005, 6:16 (annotated)

161. Further, Avendano '880 describes comparing the energy ratio (ILD) to a "threshold" to detect acoustic voice activity (*e.g.,* the presence or absence of speech). *Id.,* 6:35-7:9.

$$\lambda_I(t, \omega) = \begin{cases} \approx 0 & \text{if} \quad ILD(t, \omega) < \text{threshold} \\ \approx 1 & \text{if} \quad ILD(t, \omega) > \text{threshold} \end{cases}$$

APPLE-1005, 6:61 (annotated)

162. The value of the energy ratio (ILD) relative to the "threshold" is indicative the presence of absence of speech. *Id.*, 6:58-7:3.

163. For example, if the energy ratio (ILD) is "smaller than a threshold value (e.g., threshold=0.5) above which speech is expected to be, λ_I is small." *Id.,* 6:66-7:1. Specifically, when the ratio energy (ILD) is less than the "threshold," λ_I is set to one. *Id,* 6:61. This is indicative of an absence of speech (*e.g.,* the absence of acoustic voice activity of a speaker). *Id.,* 6:58-7:3.

164. In contrast, if the ratio energy (ILD) "starts to rise (e.g., because speech is present within the large ILD region), λ_I increases." *Id.*, 7:2-4. Specifically, when the ratio energy (ILD) is greater than the "threshold," λ_I is set to one. *Id.*, 6:61. This is indicative of a presence of speech (*e.g.,* the presence of acoustic voice activity of a speaker). *Id.,* 6:58-7:3.

C. Claim 30

[30]: The method of claim 29, wherein the first virtual microphone and the second virtual microphone have approximately similar responses to noise and approximately dissimilar responses to speech

165. Avendano '880 (and in combination with Hou) discloses that the first virtual microphone and the second virtual microphone have approximately similar responses to noise and approximately dissimilar responses to speech.

166. As I explain in Section VII(B) (incorporated herein), and specifically in reference to claim elements [29b] and [29c], in the combination of Avendano '880 and Hou would include a first virtual microphone and a second virtual microphone. APPLE-1005, 4:47-54, 5:15-39, 9:29-42, FIG. 6. The first virtual microphone has a directional pattern directed to the front of "audio device 104." *Id.* The second virtual microphone has a directional pattern directed to the back of "audio device 104." *Id.*

167. As Avendano '880 explains, noise is typically generated in the "background" or "far field," rather than from a location near the audio device. *Id.,* 3:12-55, FIGS. 1a-1b. In addition, Avendano '880 describes that noise can include "any sounds from one or more locations different than the audio source 102, and may include reverberations and echoes." *Id.,* 3:35-41.

168. A POSITA would have recognized that, according to Avendano ’880’s configuration, Avendano ’880’s virtual microphones would have approximately similar responses to noise.

169. For example, Avendano ’880 (and in combination with Hou) describes two virtual microphones having respective directional patterns. *Id.*, 4:47-52, 5:25-35, FIG. 6. However, neither of these virtual microphones is directed to a “background” or “far field.” *Id.,* 3:12-55, FIGS. 1a-1b. Instead, each of these virtual microphones is directed to a region in proximity to the audio device, such as immediately in front of the audio device or immediately behind the audio device. *Id*. As such, neither virtual microphone would be more sensitive to noise generated in the “background” or “far field” than the other.

170. Further, Avendano ’880 explains that an audio device would detect both (i) noise propagating directly from a noise source to the audio device, and (ii) reverberations and echoes of that noise from multiple other locations relative to the audio device. *Id.,* 3:35-41. Due to the non-directionally specific nature of these reverberations and echoes, neither virtual microphone would be more sensitive to detecting noise (and the reverberations and echoes thereof) than the other.

171. A POSITA also would have recognized that, according to Avendano ’880’s configuration (and the configuration in combination with Hou), Avendano ’880’s virtual microphones would have approximately dissimilar responses to speech.

172. As Avendano ’880 explains speech is typically generated near the front of the device. *Id.*, 3:42-55, FIG. 1a-1b.

173. A POSITA would have recognized that, in according to Avendano ’880’s configuration (and the configuration in combination with Hou), the virtual microphones would have approximately dissimilar responses to speech.

174. For example, the directional pattern of the first virtual microphone is specifically directed to the front of the device (*i.e.,* towards the source of speech). In contrast, the directional pattern of the second virtual microphone is specifically directed to the rear of the device (*i.e.,* away from the source of speech). Accordingly, the first virtual microphone would have a greater response to speech than that of the second virtual microphone.

D. Claim 31

[31]: The method of claim 29, comprising applying a calibration to at least one of the first signal and the second signal, wherein the calibration compensates a second response of the second physical microphone so that the second response is equivalent to a first response of the first physical microphone

175. Avendano ’880 (and in combination with Hou) discloses applying a calibration to at least one of the first signal and the second signal, wherein the calibration compensates a second response of the second physical microphone so

that the second response is equivalent to a first response of the first physical microphone.

176. As I explain in Sections VI(A) and VII(A) (incorporated herein), Avendano '880 applies a calibration ("gain factor, g") to at least the second signal "to equalize the signal levels" of the first and second signals. APPLE-1005, 5:36-39, 9:54-59; FIGS. 4a-4b.

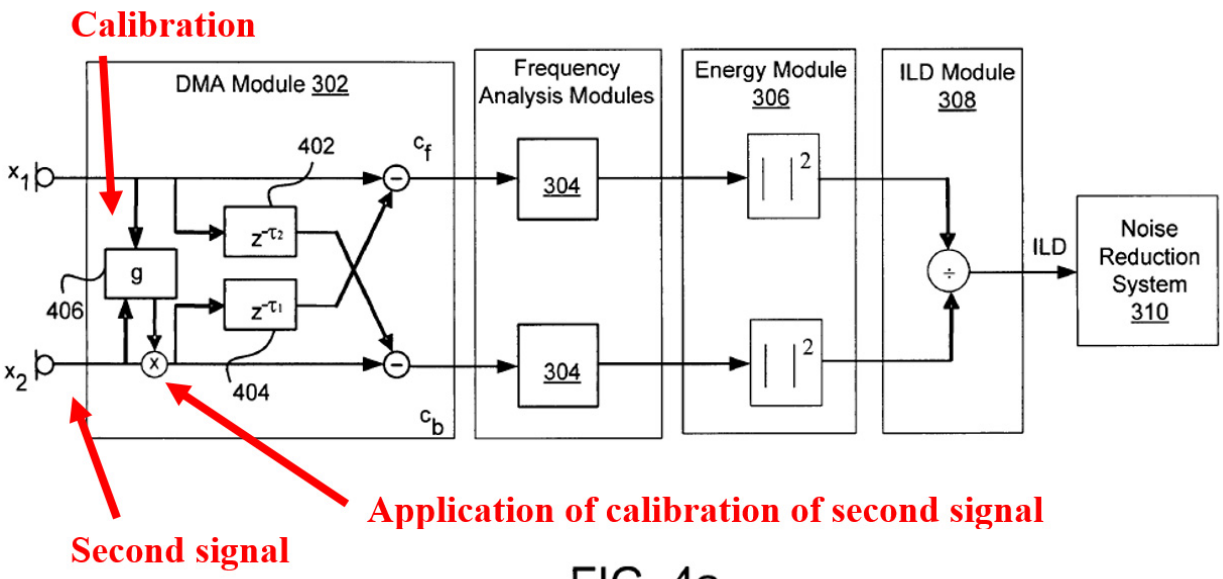

FIG. 4a

APPLE-1005, FIG. 4a (annotated)

177. Accordingly, Avendano '880's calibration compensates a second response of the second physical microphone so that the second response is equivalent to a first response of the first physical microphone.

E. Claim 33

[33]: The method of claim 29, wherein the forming of the first virtual microphone comprises applying the filter to the second signal

178. In the combination of Avendano '880 and Hou, forming of the first virtual microphone comprises applying the filter to the second signal.

179. As I explain in Sections VII(A)-(B) (incorporated herein), a POSITA would have recognized that Avendano '880 teaches the importance of equalizing signal levels of signals generated by two respective microphones, and that Hou discloses a specific "system 500" for performing precisely this function. Accordingly, a POSITA would have been motivated to implement Hou's signal compensation or correction components in Avendano '880 to further improve the equalization of the signal output by the microphones (*e.g.,* to generate a signal "hav[ing] robust directionality" and to enhance "directional noise suppression"). Sections VII(A)-(B); APPLE-1008*,* 5:50-56, 9:28-41.

180. Further, a POSITA would have recognized that the combination of Avendano '880 and Hou could be used to produce (i) a signal having "hav[ing] robust directionality" in the <u>forward</u> direction <u>and</u> (ii) a signal having "hav[ing] robust directionality" in the <u>backwards</u> direction.

181. Two example modifications to Avendano '880's system based on the teachings in Hou are described below.

First Example Modification

182. As I explain in Sections VII(A)-(B), in a first example modification, a POSITA would have incorporated Hou's filter (*e.g.,* implemented by components of Hou's system 500) into Avendano '880's "DMA module 302" to generate a signal "hav[ing] robust directionality" in a backwards direction (*e.g.,* to improve the directionality of Avendano '880's rear-facing cardioid secondary signal). Section VII(A), First Example Modification; Section VII(B).

183. Similarly, a POSITA would have also implemented Hou's filter in Avendano '880's "DMA module 302" to additionally generate a signal "hav[ing] robust directionality" in a forward direction (*e.g.,* to improve the directionality of Avendano '880's front-facing cardioid secondary signal). Sections VII(A)-(B). This modification would merely involve the implementation of additional instances of Hou's "delay unit 506," "multiplication unit 314" and "subtraction unit 516" to additionally generate a front-facing signal, using the same processing techniques that were used to generate the back-facing signal.

184. According to a first example modification, Hou's system 500 would include additional instances of Hou's "delay unit 506," "multiplication unit 314" and "subtraction unit 516" to additionally generate a front-facing signal. The additional instances of Hou's components would process Avendano '880's first signals x_1 and x_2 in a manner that mirrors that of the first instance of Hou's

components, in order to produce a directional signal that is directed in the opposite direction as that generated by the first instance of Hou's components.

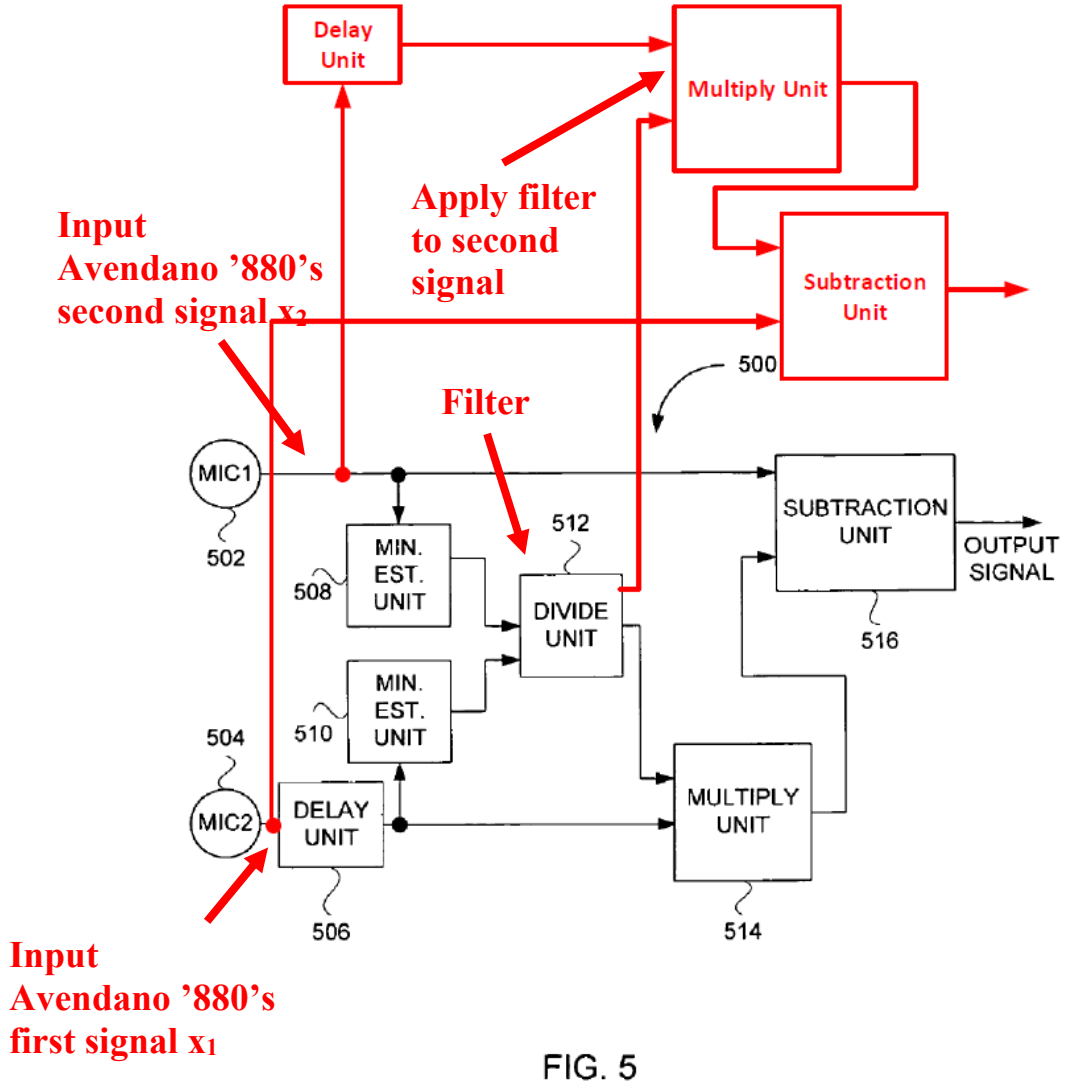

FIG. 5

APPLE-1008, FIG. 5 (modified)

185. In particular, a delay would be applied to Avendano '880's second signal by a second instance of Hou's "delay unit 506." APPLE-1008, 5:36-47, FIG. 5. Further, Hou's filter would be applied to the delayed version of Avendano '880's

second signal by a second instance of "multiplication unit 514" to generate a compensated second signal. *Id.* The instance of Hou's filter that is applied to Avendano '880's second signal would be formed in a similar manner as the instance of Hou's filter that is applied to Avendano '880's first signal (*e.g.,* formed as a ratio of a first quantity and a second quantity).

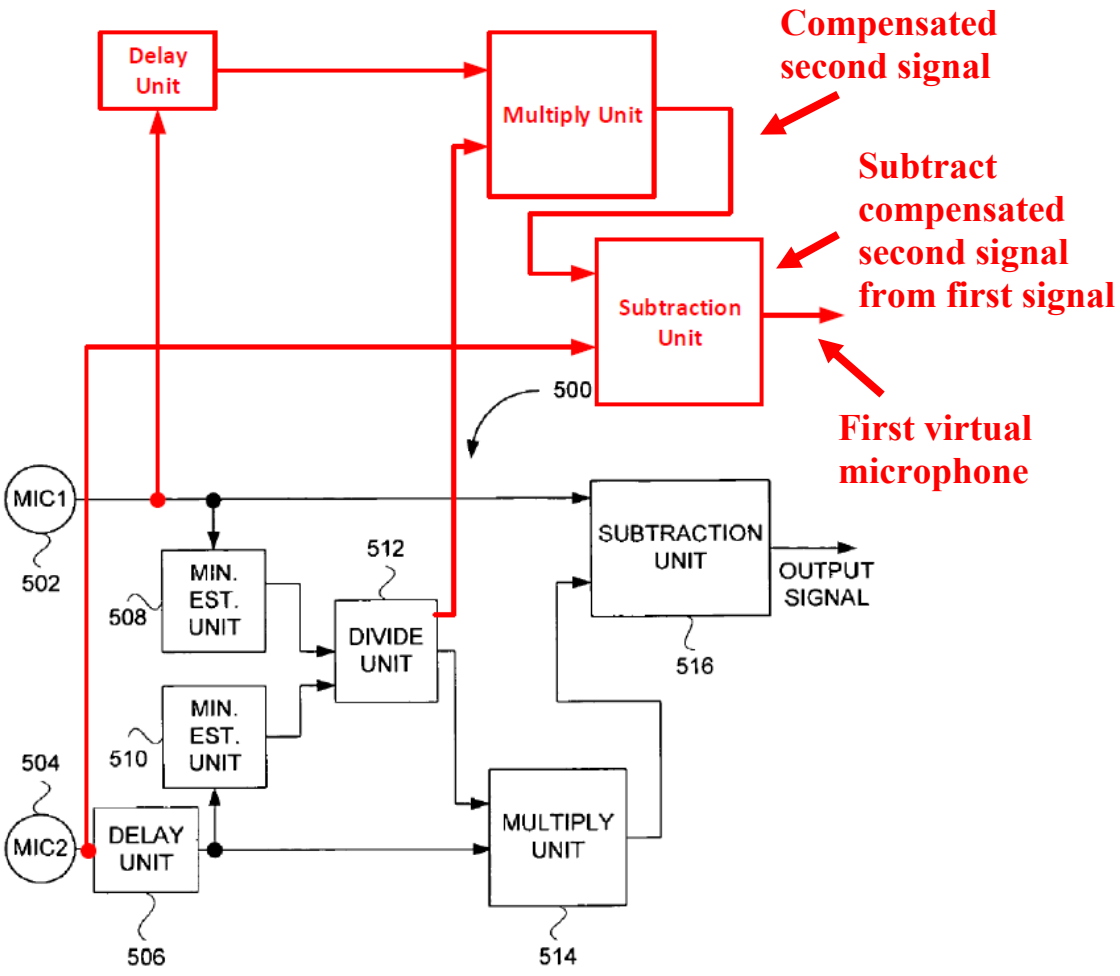

FIG. 5

APPLE-1008, FIG. 5 (modified)

186. Further, a first virtual microphone would be generated by subtracting the second compensated signal from Avendano '880's first signal using a second instance of Hou's "subtraction unit 516." *Id.*, 5:50-56, FIG. 5.

187. The first virtual microphone would have "robust directionality" in a forward direction. This is analogous to Avendano '880's system in which Avendano '880's secondary signal x_2 (having been delayed by the "delay node 402") is subtracted from Avendano '880's first signal x_2 to generate a directional first virtual microphone ("cardioid primary signal") facing the forward direction.

<u>Second Example Modification</u>

188. As I explain in Sections VII(A)-(B), in a second example modification, a POSITA would have found it obvious to modify Avendano '880's system to include filters that equalize Avendano '880's signals with one another immediately prior to subtracting one signal from the other to produce respective directional virtual microphones. Section VII(A), Second Example Modification; Section VII(B).

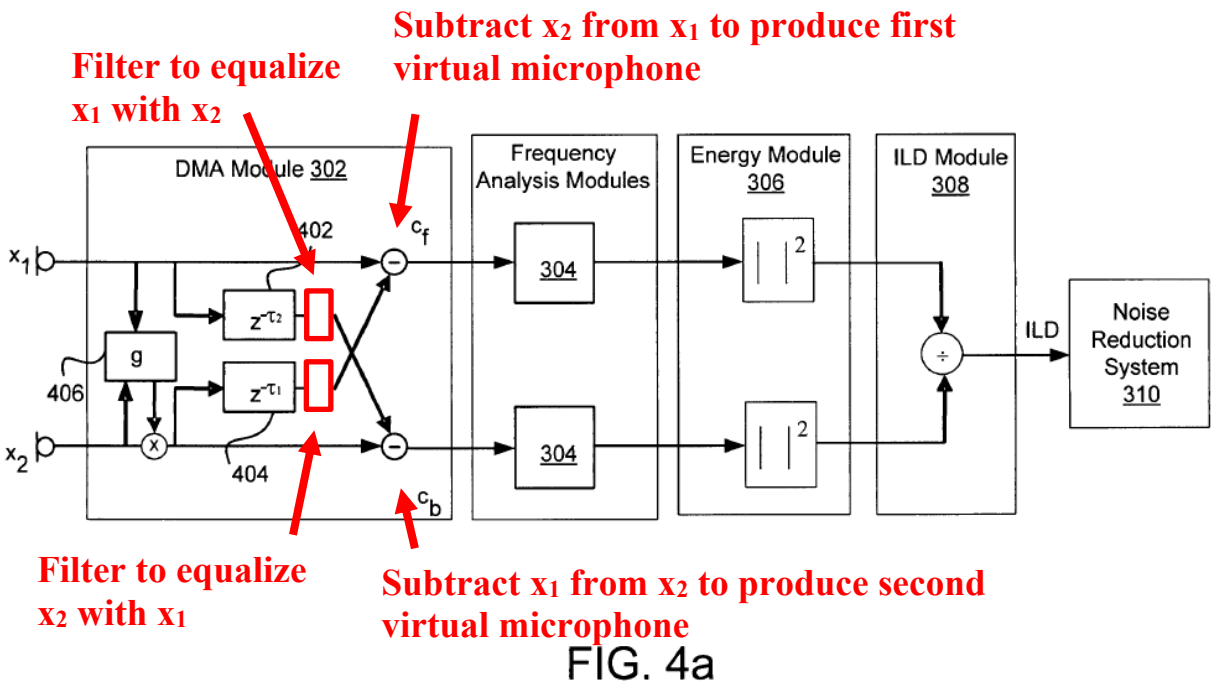

FIG. 4a

APPLE-1005, FIG. 4a (modified)

189. According to this example modification, a first virtual microphone (*e.g.,* a front-facing directional signal) would be formed by applying a filter to the second signal x_2 to equalize the second signal x_2 with the first signal x_1. This filter would be formed in a similar manner as the filter that is applied to the first signal x_1 to equalize the first signal x_1 with the second signal x_2 (*e.g.,* formed as a ratio of a first quantity and a second quantity).

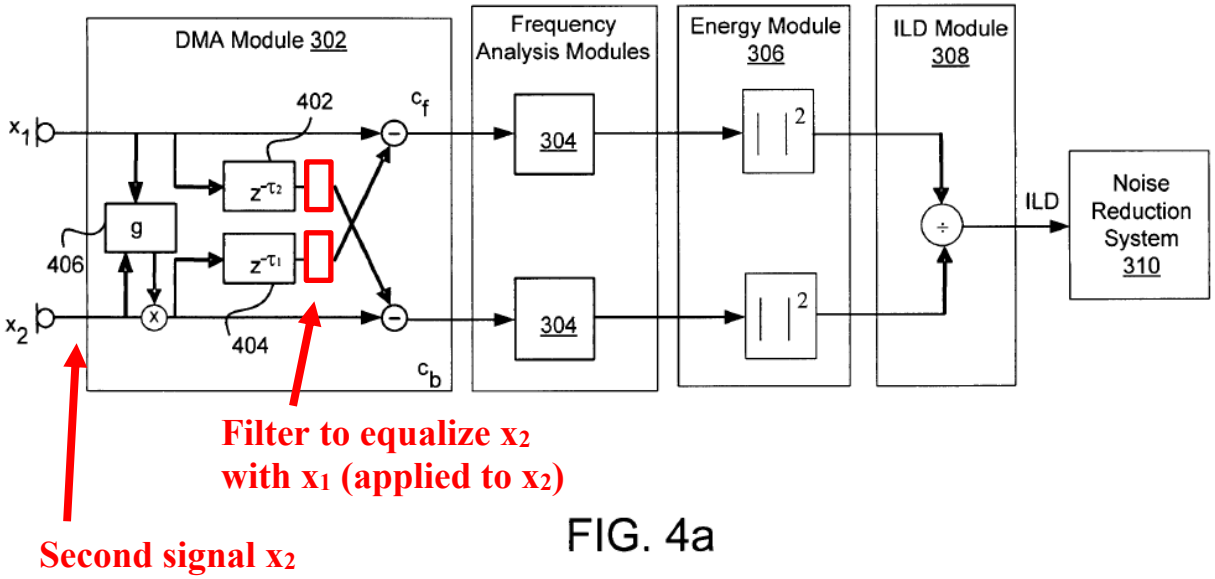

FIG. 4a

APPLE-1005, FIG. 4a (modified)

190. Further, a first virtual microphone would be generated by subtracting the second signal x_2 from the first signal x_1. APPLE-1005, 6:15-39, FIG. 4a.

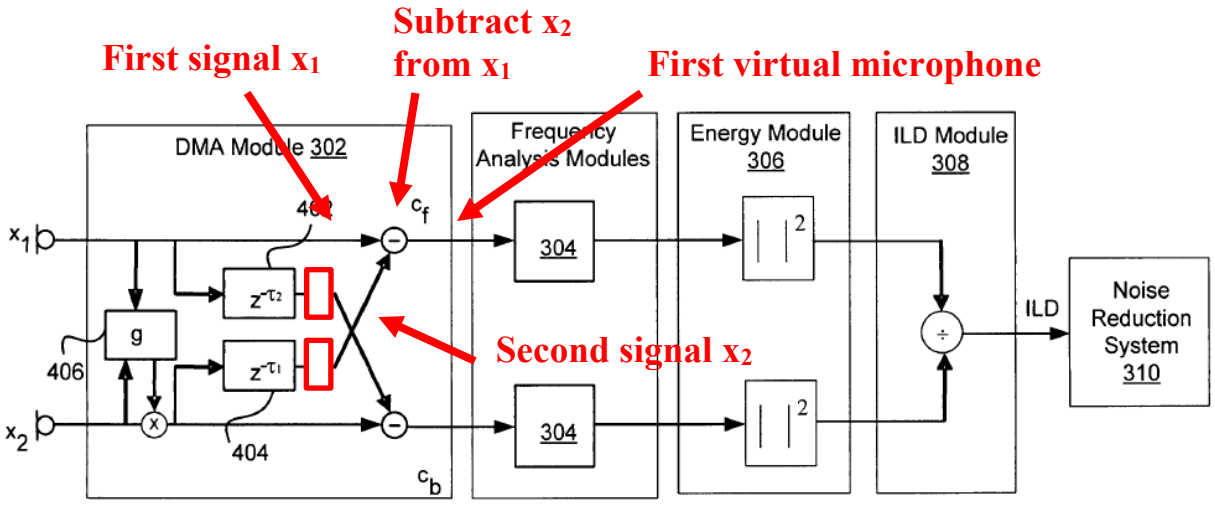

FIG. 4a

APPLE-1006, FIG. 4a (modified)

F. Claim 34

[34]: The method of claim 33, wherein the forming of the first virtual microphone comprises applying the calibration to the second signal

191. In the combination of Avendano '880 and Hou, the forming of the first virtual microphone comprises applying the calibration to the second signal.

192. To form a first virtual microphone (*e.g.,* a front-facing directional signal), a calibration would be applied to the second signal x_2 using Avendano '880's "gain factor, g" and/or multiplexer. Section VII(A); APPLE-1005, 5:36-39, 9:54-59, FIGS. 4a-4b. Further, the calibrated second signal x_2 and the first signal x_1 would be provided to Hou's system 500 for further processing to form the first virtual microphone. Sections VII(A)-(B), (E). Specifically, the calibrated second signal x_2 would be provided to Hou's upper signal pathway, and the first signal x_1 would be provided to Hou's lower signal pathway. *Id.*

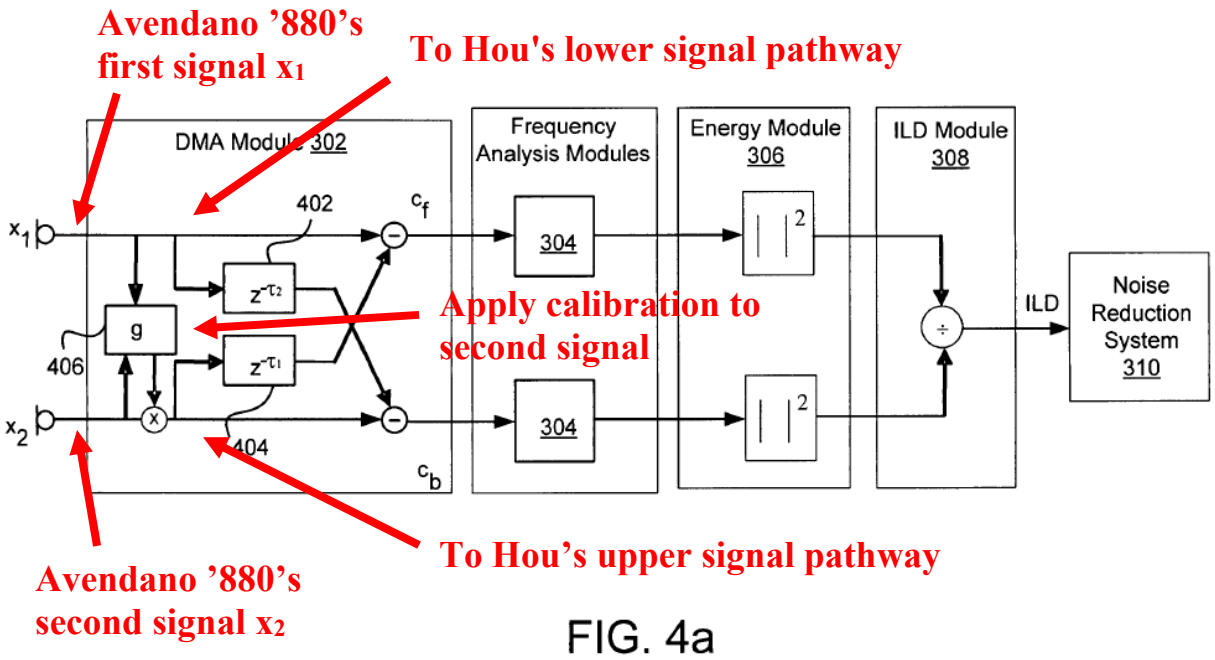

FIG. 4a

APPLE-1006, FIG. 4a (annotated)

G. Claim 35

[35]: The method of claim 34, wherein the forming of the first virtual microphone comprises applying the delay to the first signal

193. In the combination of Avendano '880 and Hou, the forming of the first virtual microphone comprises applying the delay to the first signal.

194. Avendano '880 describes a "practical implementation of [Avendano '880's] DMA module 302" with reference to Fig. 4b. APPLE-1005, 8:38-51, FIG. 4b. In this "practical implementation," a delay is applied to the first signal x_1 via "delay node 414" prior to providing the first signal x_1 to other components of Avendano '880's system for further processing. APPLE-1005, 8:38-51, FIG. 4b.

Further, the first signal x_1 is provided to Hou's system 500 (*e.g.,* to Hou's lower signal pathway) to form a first virtual microphone. Sections VII(A)-(B), (E)-(F).

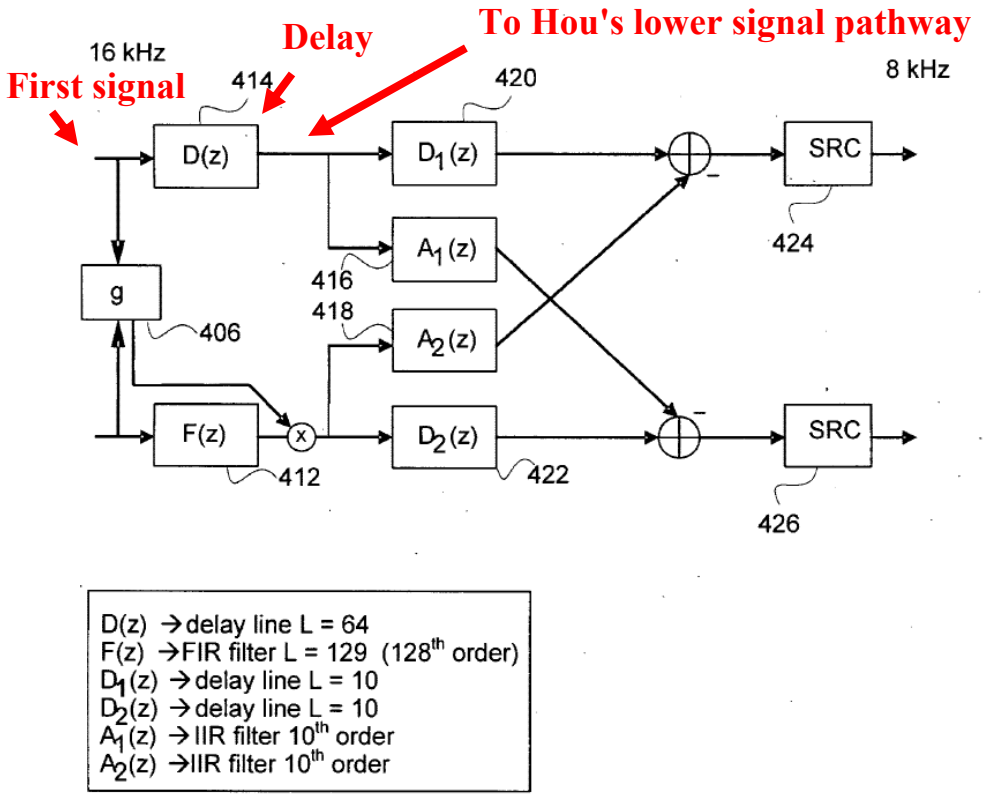

FIG. 4b

APPLE-1005, FIG. 4b (annotated)

H. Claim 36

[36]: The method of claim 35, wherein the forming of the first virtual microphone by the combining comprises subtracting the second signal from the first signal

195. In the combination of Avendano '880 and Hou, the forming of the first virtual microphone by the combining comprises subtracting the second signal from the first signal.

196. Two example modifications to Avendano ’880’s system based on the teachings in Hou are described below.

First Example Modification

197. As I explain in Sections VII(A)-(B) and (E) (incorporated herein), in a first example modification, a first virtual microphone would be generated by subtracting the second compensated signal from Avendano ’880’s first signal using a second instance of Hou’s “subtraction unit 516.” Sections VII(A), First Example Modification, (B), (E); APPLE-1008, 5:50-56, FIG. 5.

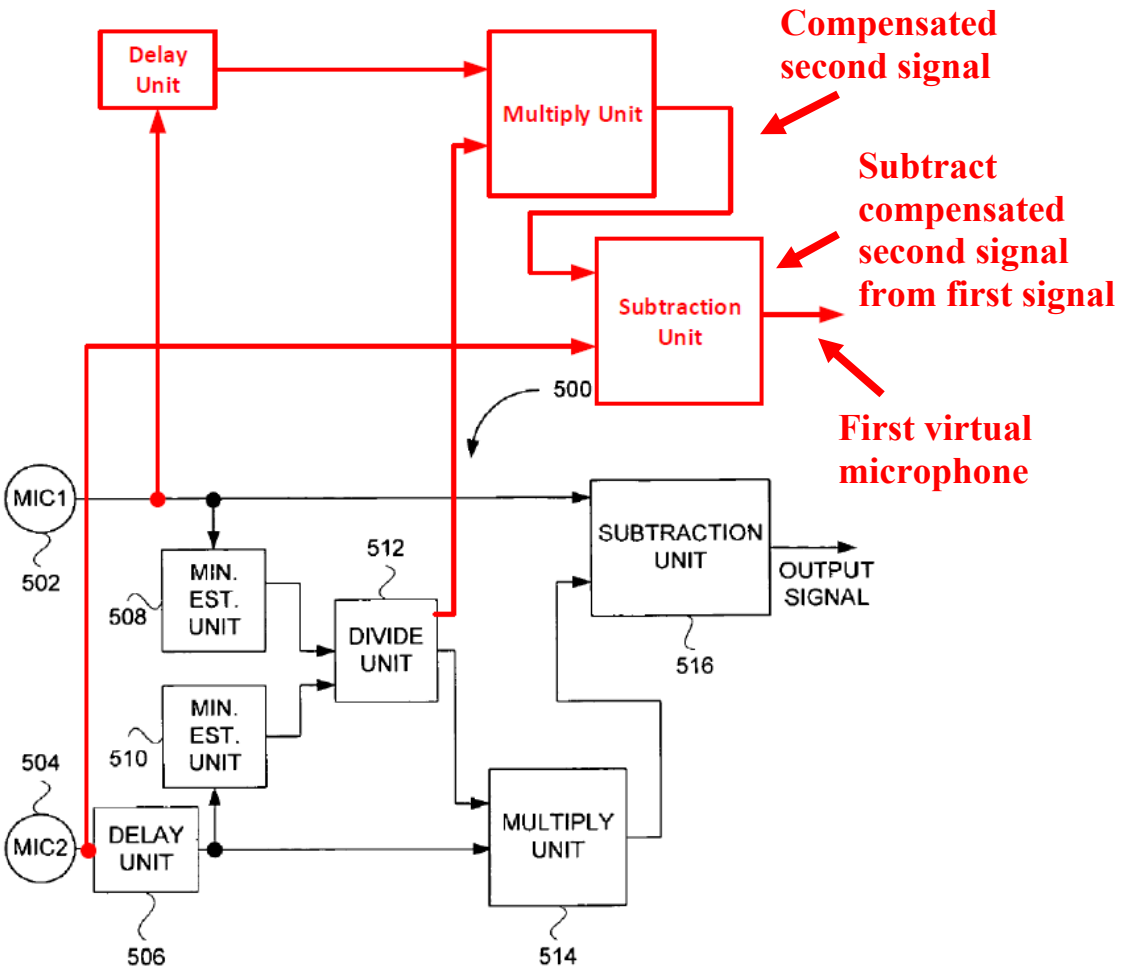

FIG. 5

APPLE-1008, FIG. 5 (modified)

Second Example Modification

198. In a second example modification, a first virtual microphone would be generated by subtracting the second signal x_2 from the first signal x_1. Sections VII(A), Second Example Modification, (B), (E); APPLE-1005, 6:15-39, FIG. 4a.

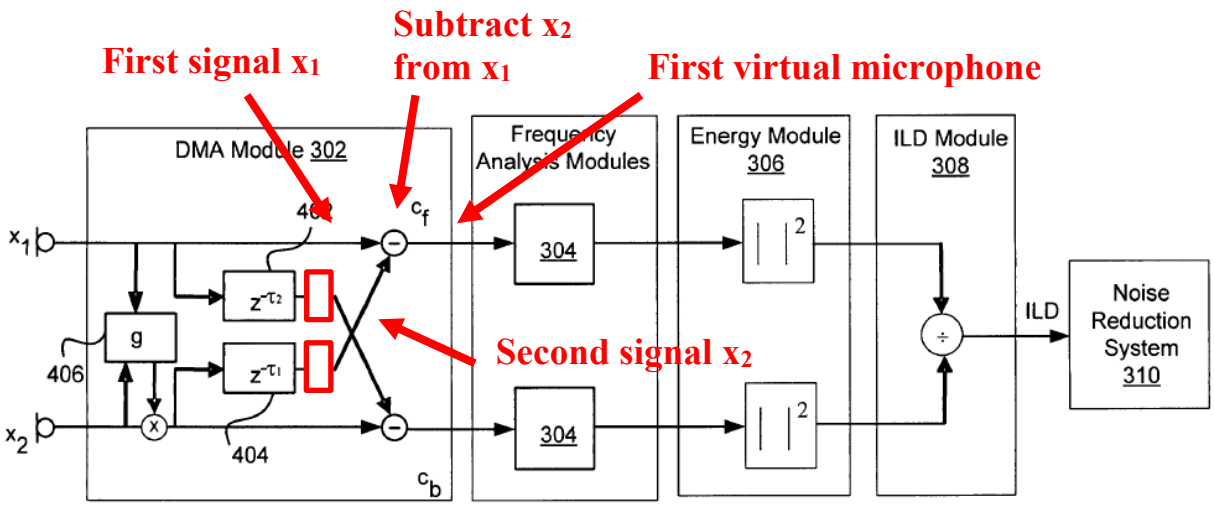

FIG. 4a

APPLE-1006, FIG. 4a (modified)

I. Claim 37

[37]: The method of claim 29, wherein the filter is an adaptive filter

199. In the combination of Avendano '880 and Hou, the filter is an adaptive filter.

200. As I explain in Sections VII(A)-(B) (incorporated herein), in the combination of Avendano '880 and Hou, Hou's "divide unit 512" forms a filter as a ratio of the first quantity to the second quantity. APPLE-1008, 5:42-45, FIG. 5. Accordingly, the filter is adapted according to both the first quantity and the second quantity.

J. Claim 41

[41]: The method of claim 29, wherein the generating of the ratio comprises generating the ratio for a frequency band

201. Avendano ’880 (and in combination with Hou) discloses that the generating of the ratio comprises generating the ratio for a frequency band.

202. As I explain in Section VII(B) (incorporated herein), Avendano discloses generating an energy ratio (*e.g.,* “ILD”). This energy ratio is generated for a frequency band.

203. For example, Avendano ’880’s “frequency analysis module 304 takes the cardioid signals and mimics the frequency analysis of the cochlea (i.e., cochlear domain) simulated by a filter bank.” APPLE-1005, 4:54-5:2; Section VII(B), [29d]. In particular, Avendano ’880’s “frequency analysis module 304 separates the cardioid signals into frequency bands,” and performs “sub-band analysis on the acoustic signal [to] determine[] what individual frequencies are present in the complex acoustic signal during a frame.” APPLE-1005, 4:54-5:2.

204. “Once the frequencies are determined,” Avendano ’880’s “energy module 306” calculates the energy ratio (“ILD”) based on signals that are output by “frequency analysis module 304.” *Id.,* 5:3-10. Specifically, the energy ratio is calculated “based on bandwidth of the cochlea channel” (*e.g.,* frequency band(s) or subband(s) for which “frequency analysis module 304 ... mimics the frequency analysis of the cochlea”). *Id*.

205. Accordingly, Avendano ’880 generates the energy ratio for a frequency band.

206. This is also reflected in Avendano '880's equation for the energy ratio ("ILD"), which indicates that the energy ratio is generated as a vector for a frequency band (ω):

Energy ratio

$$\boxed{ILD(t, \omega)} = \frac{\int |C_f(t', \omega)|^2 \, dt'}{\int_{frame} |C_b(t', \omega)|^2 \, dt'}.$$

APPLE-1005, 6:16 (annotated)

K. Claim 42

[42]: The method of claim 29, wherein the generating of the ratio comprises generating the ratio for a frequency subband

207. Avendano '880 (and in combination with Hou) discloses that the generating of the ratio comprises generating the ratio for a frequency band or band.

208. As I explain in Section VII(B) (incorporated herein), Avendano '880 discloses generating an energy ratio (*e.g.,* "ILD"). This energy ratio is generated for a frequency subband.

209. For example, Avendano '880's "frequency analysis module 304 takes the cardioid signals and mimics the frequency analysis of the cochlea (i.e., cochlear domain) simulated by a filter bank." APPLE-1005, 4:54-5:2; Section VII(B), [29d]. In particular, Avendano '880's "frequency analysis module 304 separates

the cardioid signals into frequency bands," and performs "sub-band analysis on the acoustic signal [to] determine[] what individual frequencies are present in the complex acoustic signal during a frame." APPLE-1005, 4:54-5:2.

210. "Once the frequencies are determined," Avendano '880's "energy module 306" calculates the energy ratio ("ILD") based on signals that are output by "frequency analysis module 304." *Id.,* 5:3-10. Specifically, the energy ratio is calculated "based on bandwidth of the cochlea channel" (*e.g.,* frequency band(s) or subband(s) for which "frequency analysis module 304 ... mimics the frequency analysis of the cochlea"). *Id*.

211. Accordingly, Avendano '880 generates the energy ratio for a frequency subband.

212. This is also reflected in Avendano '880's equation for the energy ratio ("ILD"), which indicates that the energy ratio is generated as a vector for a frequency subband (ω):

Energy ratio

$$\boxed{ILD(t, \omega)} = \frac{\int |C_f(t', \omega)|^2 \, dt'}{\int_{frame} |C_b(t', \omega)|^2 \, dt'}.$$

APPLE-1005, 6:16 (annotated)

L. Claim 43

[43]: The method of claim 29, comprising generating a vector of the ratio versus time

213. Avendano '880 (and in combination with Hou) discloses generating a vector of the ratio versus time.

214. As I explain in Sections VII(B), (J)-(K) (incorporated herein), Avendano '880 describes generating an energy (ILD). APPLE-1005, 6:8-34. This energy ratio is generated as a vector over time (t). Sections VII(B), [29d]; Sections (J)-(K); APPLE-1005, 6:8-34.

Energy ratio

$$\boxed{ILD(t, \omega)} = \frac{\int |C_f(t', \omega)|^2 \, dt'}{\int_{frame} |C_b(t', \omega)|^2 \, dt'}.$$

Time

APPLE-1005, 6:16 (annotated)

M. Claim 44

[44pre]: A method comprising:

215. Avendano '880 (and in combination with Hou) discloses a method. *See* Section VII(B), [29pre].

[44a]: forming a first virtual microphone by generating a first combination of a first signal and a second signal, wherein the first signal is received from a first

physical microphone and the second signal is received from a second physical microphone

216. Avendano ’880 (and in combination with Hou) discloses forming a first virtual microphone by generating a first combination of a first signal and a second signal, wherein the first signal is received from a first physical microphone and the second signal is received from a second physical microphone. *See* Section VII(B), [29a]-[29b].

[44b]: forming a filter by generating a first quantity by applying a calibration to at least one of the first signal and the second signal, generating a second quantity by applying a delay to the first signal, and forming the filter as a ratio of the first quantity to the second quantity

217. The combination of Avendano ’880 and Hou would include forming a filter by generating a first quantity by applying a calibration to at least one of the first signal and the second signal, generating a second quantity by applying a delay to the first signal, and forming the filter as a ratio of the first quantity to the second quantity. *See* Section VII(B), [29b].

[44c]: forming a second virtual microphone by applying the filter to the first signal to generate a first intermediate signal and summing the first intermediate signal and the second signal

218. The combination of Avendano ’880 and Hou would include forming a second virtual microphone by applying the filter to the first signal to generate a first intermediate signal and summing the first intermediate signal and the second signal. *See* Section VII(B), [29c].

[44d]: determining a presence of acoustic voice activity of a speaker when an energy ratio of energies of the first virtual microphone and the second virtual microphone is greater than a threshold value

219. The combination of Avendano ’880 and Hou would include determining a presence of acoustic voice activity of a speaker when an energy ratio of energies of the first virtual microphone and the second virtual microphone is greater than a threshold value. *See* Section VII(B), [29d].

VIII. GROUND 2: CLAIMS 32 AND 38-40 ARE RENDERED OBVIOUS BY AVENDANO '880 IN VIEW OF HOU AND AVENDANO ’252

A. Combination of Avendano ’880, Hou, and Avendano ’252

220. As detailed below, a POSITA would have found it obvious to further combine Avendano ’880 and Hou with Avendano ’252.

221. First, a POSITA would have recognized that each of (i) Avendano ’880’s “gain factor, g,” (ii) Hou’s filter (*e.g.,* implemented at least in part by Hou’s divide unit 512” and/or “multiplication unit 514”), and (iii) Avendano ’252’s “equalization module 412” serves a similar purpose, namely compensating for a

difference in sensitivity between mismatched microphones to generate directional signals. APPLE-1005, 5:36-39, 9:54-59, FIGS. 4a-4b; APPLE-1008, 5:26-6:22, 9:28-41, FIG. 5; APPLE-1006, 6:30-38, 10:1-59, FIGS. 4b-5.

222. Further, a POSITA would have recognized that Avendano '252's "adaption control module 502" and "adaption processor 504" are provided specifically to enhance the signal equalization or compensation process (*e.g.,* by selectively adapting an "equalization coefficient" of a compensation or equalization filter based on inputs received from the microphones). APPLE-1006, 6:30-38, 10:1-59, FIG. 5.

223. Accordingly, a POSITA would have found it obvious to modify Avendano '880's system and/or Hou's system to include Avendano '252's "adaption control module 502" and "adaption processor 504" to enhance the performance of Avendano '880's "gain factor, g" and/or Hou's filter.

224. In one example modification, a POSITA would have incorporated Avendano '252's "adaption control module 502" and "adaption processor 504" to selectively adapt one or more "equalization coefficient[s]" in Avendano '880's "gain factor, g" and/or Hou's filter, in order to further enhance the separation of speech and noise in the resulting directional signals (*e.g.,* "such that a desired speech signal is cancelled by a backward-facing cardioid pattern"). APPLE-1006, 10:37-46.

225. Further, a POSITA would have had a reasonable expectation of success in modifying Avendano ’880’s system and/or Hou’s system in view of Avendano ’252. For example, such a modification would have simply been an application of known methods (*e.g.,* selectively adapting an “equalization coefficient” of a compensation or equalization filter based on inputs received from the microphones) to achieve a predictable result (*e.g.,* improving the separation of speech and noise using the compensation or equalization filter). APPLE-1006, 10:1-59. Further, given the similarities between Avendano ’880’s “gain factor, g,” Hou’s filter, and Avendano ’252’s “equalization module 412,” limited modifications would have been necessary to incorporate Avendano ’252’s “adaption control module 502” and “adaption processor 504” into Avendano ’880’s system and/or Hou’s filter.” Further, other operations in Avendano ’880’s system and/or Hou’s filter would not have been impacted by the combination.

226. Thus, the combination of Avendano ’880, Hou, and Avendano ’252 would have been well within the grasp of a POSITA and a POSITA would have had a reasonable expectation of success in making the combination.

B. Claim 32

[32]: The method of claim 29, comprising applying a delay to the first intermediate signal, wherein the delay is proportional to a time difference between arrival of the

speech at the second physical microphone and arrival of the speech at the first physical microphone

227. In the combination of Avendano ’880 and Hou (and in combination with Avendano ’252), a delay is applied to the first intermediate signal, wherein the delay is proportional to a time difference between arrival of the speech at the second physical microphone and arrival of the speech at the first physical microphone.

228. As I explain in Sections VI(B) and VII(A)-(B) (incorporated herein), in a first example combination of Avendano ’880 and Hou, Hou’s “divide unit 512” forms a filter (*e.g.,* as a ratio of the first quantity to the second quantity). Section VI(B); Section VII(A), First Example Modification; Section VII(B), [29c]. APPLE-1008, 5:42-45, FIG. 5. This filter is applied to Avendano ’880’s first signal (*e.g.,* by “multiplication unit 514”) to generate a first intermediate signal. Section VI(B); Section VII(A), First Example Modification; Section VII(B), [29c]; APPLE-1008, 5:45-47, FIG. 5.

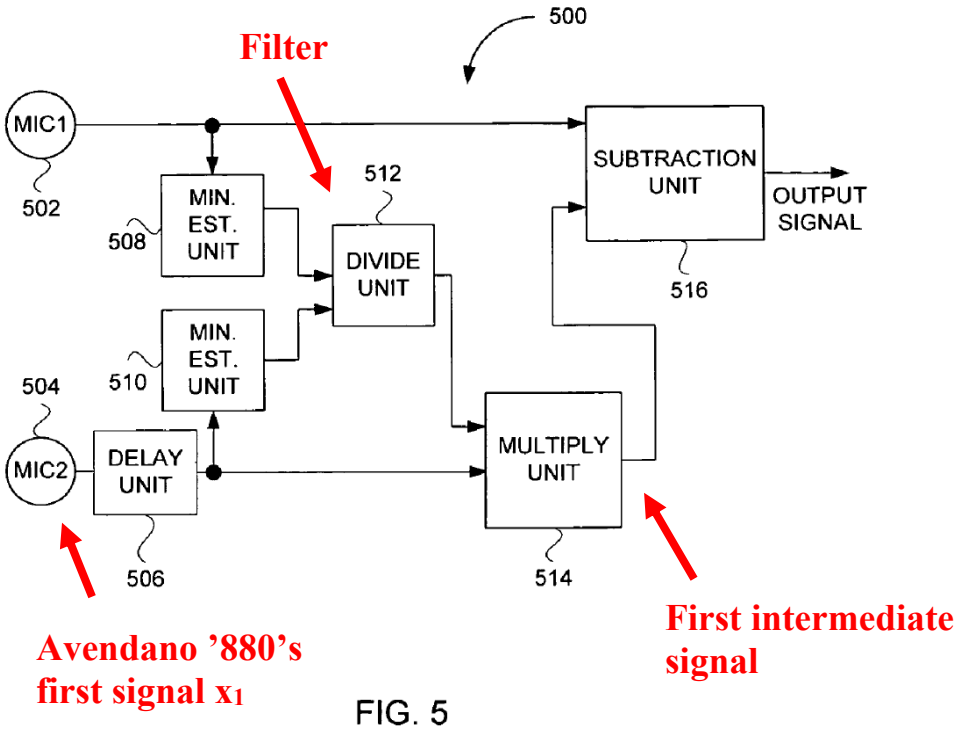

APPLE-1008, FIG. 5 (annotated)

229. Further, the first intermediate signal includes a delay applied by Hou's "delay unit 506." Sections VII(B), VII(A); Section VII(B), [29b]; APPLE-1008, 5:27-41, FIG. 5.

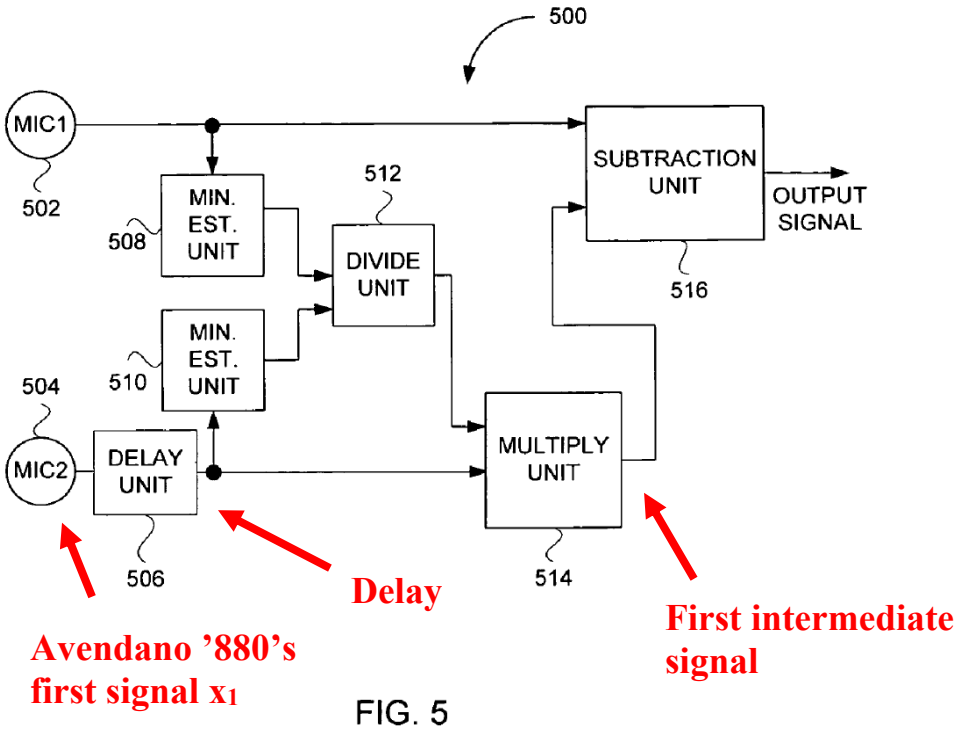

APPLE-1008, FIG. 5 (annotated)

230. As I also explain in Sections VI(B) and VII(A)-(B), in a second example combination of Avendano '880 and Hou, Hou's "divide unit 512" forms a filter (*e.g.,* as a ratio of the first quantity to the second quantity). Section VI(B); Section VII(A), Second Example Modification; Section VII(B); APPLE-1008, 5:42-45, FIG. 5. This filter is applied to Avendano '880's first signal to generate a first intermediate signal. Section VI(B); Section VII(A), Second Example Modification; Section VII(B), [29c]. Further, the first intermediate signal includes a delay applied by Avendano '880's "delay node 402." Sections VI(A)-(B);

Section VII(A), Second Example Modification; Section VII(B), [29b]; APPLE-1005, 6:15-39, FIG. 4a.

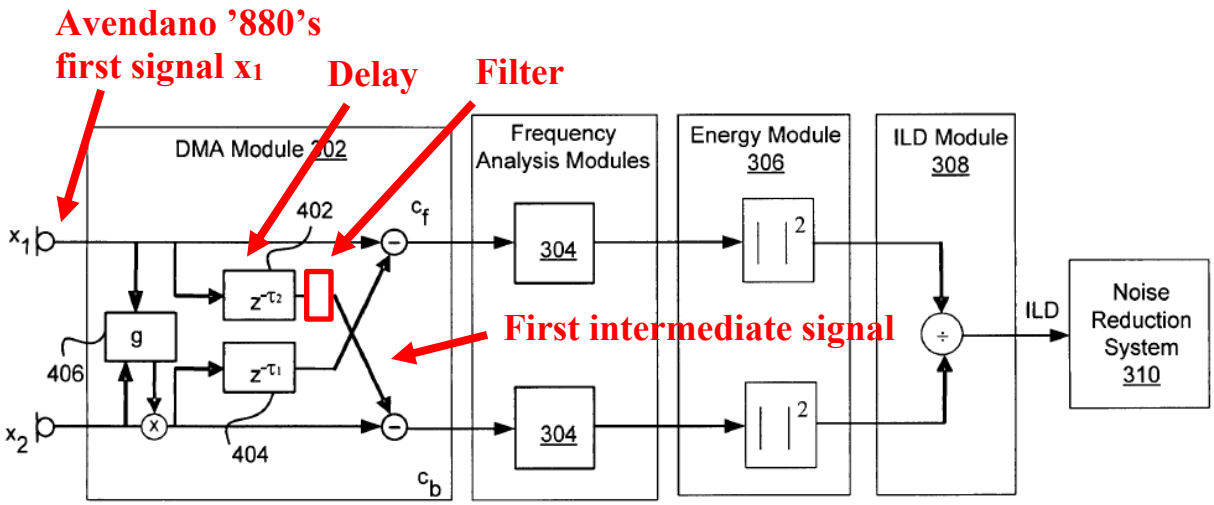

FIG. 4a

APPLE-1005, FIG. 4a (modified)

231. Accordingly, in both of the example combinations of Avendano '880 and Hou, a delay has been applied to the first intermediate signal.

232. Further, a POSITA would have found it obvious to configure the delay such that it is proportional to a time difference between arrival of the speech at the second physical microphone and arrival of the speech at the first physical microphone.

233. In Avendano ’880’s system, “due to a space difference between the microphones, the difference in times of arrival of the signals from a speech source to the microphones may be utilized to localize the speech source.” APPLE-1005, 1:28-38. Further, Avendano ’880 discloses that “embodiments may use a combination of energy level differences and time delays to discriminate speech.” *Id.,* 3:27-60.

234. Specifically, like Hou, Avendano ’880 describes applying a delay (*e.g.,* using a “delay node 402”) to a signal from a physical microphone, and combining the delayed signal with the signal from another physical microphone to generate a directional virtual microphone (“cardioid secondary signal”) facing the backwards direction. APPLE-1005, 6:15-39, FIG. 4a.

235. A POSITA would have recognized that, to account for the “space difference between the microphones,” the delays would need to be proportional to a time difference between the arrivals of the speech at the first and second physical microphones. For example, a POSITA would have recognized that, if the “space difference between the microphones” were to increase, the delay would likewise proportionally increase to account for the increase in propagation time. Similarly, a POSITA would have recognized that, if the “space difference between the microphones” were to decrease, the delay would likewise proportionally decrease to account for the decrease in propagation time.

236. To the extent that the combination of Avendano ’880 and Hou does not describe that the delay is proportional to a time difference between arrival of the speech at the second physical microphone and arrival of the speech at the first physical microphone,” the combination of Avendano ’880, Hou, and Avendano ’252 would have rendered this feature obvious.

237. As I explain in Section VIII(A) (incorporated herein), a POSITA would have found it obvious to further combine Avendano ’880 and Hou with Avendano ’252.

238. As with Avendano ’880 and Hou, Avendano ’252 describes applying a delay to a signal from a physical microphone, and combining the delayed signal with the signal from another physical microphone to generate a directional virtual microphone facing the backwards direction. APPLE-1006, 5:17-7:64, FIGS. 4b-5. Specifically, Avendano ‘252 describes applying a delay to a signal using a “delay node 412” from a physical microphone, and combining the delayed signal with the signal from another physical microphone to generate a backward-facing cardioid pattern. *Id.*

239. Avendano ’252 discloses that these directional virtual microphones are generated using “differential arrays.” APPLE-1006, 5:17-7:64, FIGS. 4a-5. As Avendano ’252 explains, “[p]attern generation using differential arrays (DA) requires use of fractional delays whose value may depend on a distance between the microphones.” *Id.* Use of these “differential arrays’ is beneficial, as it enables

directional virtual microphones to be generated using "two omni-directional microphones" rather than "two cardioid or directional microphones." *Id.*

240. For instance, "[f]or sound arriving from a back of the array (θ=180 deg) an output $y_1(t)$ is zero if a delay line 402 introduces a delay equal to an acoustic delay between the primary and secondary microphones 106 and 108. This may be represented by $\tau = d / c$ where c is the speed of sound in air (i.e., 340 m/s)." *Id.* According to this relationship, the delay "τ" would be proportional of the time difference between arrival of the speech at the second physical microphone and arrival of the speech at the first physical microphone.

241. In view of Avendano '252, a POSITA would have found it obvious to implement a delay (*e.g.,* Avendano '880's delay nodes and/or Hou's delay unit), such that the delay is proportional to a time difference between arrival of the speech at the second physical microphone and arrival of the speech at the first physical microphone. APPLE-1006, 5:17-7:64, FIGS. 4a-5. As Avendano '252 discloses, implementing such a delay enables directional virtual microphone to be generated using "two omni-directional microphones" rather than "two cardioid or directional microphones." *Id.*

C. Claim 38

[38]: The method of claim 29, comprising adapting the filter to minimize a second virtual microphone output when only speech is being received by the first physical microphone and the second physical microphone

242. In the combination of Avendano ’880, Hou, and Avendano ’252, the filter is adapted to minimize a second virtual microphone output when only speech is being received by the first physical microphone and the second physical microphone.

243. As I explain in Sections VI(B) and VII(A)-(B) (incorporated herein), in the combination of Avendano ’880 and Hou (and in combination with Avendano ’252), Hou’s “divide unit 512” forms a filter for “compensat[ing] (or correct[ing]) for the relative difference in sensitivity between ... mismatched first and second microphones.” Section VI(B); Section VII(A); Section VII(B), [29b]; APPLE-1008, 5:42-50, FIG. 5.

244. Avendano ’252 teaches that such a filter can be adapted to minimize a second virtual microphone output when only speech is being received by the first physical microphone and the second physical microphone.

245. For example, Avendano ’252 discloses an “equalization module 412” having a similar signal compensation or correction function as Hou’s filter. APPLE-1006, 2:17-28, 6:9-38, 10:1-59, FIG. 5. As Avendano ’252 explains, the “equalization module 412 applies an adaptive equalization coefficient determined based on an

adaptation control module 502 and an adaptation processor 504" and "is configured to compensate for microphone mismatch post-manufacturing." APPLE-1006, 10:1-8.

246. Further, Avendano '252 discloses that an "adaptation processor 504 is configured to adjust the equalization coefficient such that a desired speech signal is cancelled by a backward-facing cardioid pattern." *Id.,* 10:37-39. As Avendano '252 explains, "[w]hen the adaptation control module 502 indicates there is a desired signal coming from the front/forward direction (i.e., value=1), the adaptation processor 504 adapts the equalization coefficient to essentially cancel the desired signal in order to create a zero or null in that direction." *Id.,* 10:40-46. *See also id.,* 10:9-36. Accordingly, when only speech is being received by a first physical microphone and a second physical microphone, the output of a secondary virtual microphone (*e.g.,* a backward-facing cardioid pattern) would be minimized due to the "cancel[ation]" of the speech from the output. APPLE-1006, 10:37-46.

247. Further, Avendano '252 discloses that this process is beneficial in adapting "cardioid patterns ... to compensate for microphone mismatch," such as by generating "a null of a backward-facing cardioid pattern to be directed towards a desired audio source." APPLE-1006, 10:1-8. Further, as Avendano '252 explains, "[t]he resulting signals from the adaptation may then be utilized in a noise suppression system and/or speech enhancement system." APPLE-1006, 2:63-3:7.

248. A POSITA would have recognized that Avendano ’252’s “equalization module 412” and Hou’s filter serve a similar purpose, namely compensating for a difference in sensitivity between mismatched microphones to generate directional signals. APPLE-1006, 6:30-38, 10:1-59, FIGS. 4b-5; APPLE-1008, 5:26-6:22, 9:28-41, FIG. 5. Further, a POSITA would have recognized that adapting Hou’s filter to minimize a second virtual microphone output (*e.g.,* a directional signal facing a rear of the device) when only speech is being received by the first physical microphone and the second physical microphone (as taught by Avendano ’252) would improve the performance of a noise suppression system and/or speech enhancement system. APPLE-1006, 2:63-3:7.

249. Accordingly, a POSITA would have found it obvious to adapt Hou’s filter to minimize a second virtual microphone output when only speech is being received by the first physical microphone and the second physical microphone.

D. Claim 39

[39]: The method of claim 37, wherein the adapting comprises applying a least-mean squares process

250. In the combination of Avendano ’880, Hou, and Avendano ’252, the adapting comprises applying a least-mean squares process.

251. As I explain in Sections III(C), III(D), and III(K) (incorporated herein), in the combination of Avendano ’880 and Hou, Hou’s “divide unit 512” forms a filter

as a ratio of the first quantity to the second quantity. Section III(C); Section III(D), [29b]; Section III(K)l; APPLE-1008, 5:42-45, FIG. 5. Accordingly, the filter is adapted according to both the first quantity and the second quantity.

252. Further, Avendano ’252 teaches that such a filter can be adapted by applying a least-mean squares process.

253. For example, Avendano ’252 discloses an “equalization module 412” having a similar signal compensation or correction function as Hou’s filter. APPLE-1006, 2:17-28, 6:9-38, 10:1-59, FIG. 5. As Avendano ’252 explains, the “equalization module 412 applies an adaptive equalization coefficient determined based on an adaptation control module 502 and an adaptation processor 504” and “is configured to compensate for microphone mismatch post-manufacturing.” APPLE-1006, 10:1-8.

254. Further, Avendano ’252 discloses that this adaption can be “performed using a normalized least mean square (NLMS) algorithm,” such as by “minimiz[ing] a square of a calculated error.” APPLE-1006, 10:47-59, 11:66-12:5.

255. A POSITA would have recognized that Avendano ’252’s “equalization module 412” and Hou’s filter serve a similar purpose, namely compensating for a difference in sensitivity between mismatched microphones to generate directional signals. APPLE-1006, 6:30-38, 10:1-59, FIGS. 4b-5; APPLE-1008, 5:26-6:22, 9:28-41, FIG. 5. Further, a POSITA would have recognized that adapting Hou’s

filter by applying a least-mean squares process (as taught by Avendano '252') would improve the performance of a noise suppression system and/or speech enhancement system, such as by "minimiz[ing] a square of a calculated error" in the system to better "compensate for microphone mismatch post-manufacturing." APPLE-1006, 106:30-38, 10:1-59.

256. Accordingly, a POSITA would have found it obvious to adapt Hou's filter by applying a least-mean squares process.

E. Claim 40

[40]: The method of claim 37, comprising generating coefficients of the filter during a period when only speech is being received by the first physical microphone and the second physical microphone

257. In the combination of Avendano '880 and Hou, coefficients of the filter are generated during a period when only speech is being received by the first physical microphone and the second physical microphone. APPLE-1003, XX.

258. As I explain in Sections VII(A)-(B) (incorporated herein), in the combination of Avendano '880 and Hou (and in combination with Avendano '252), Hou's "divide unit 512" forms a filter for "compensat[ing] (or correct[ing]) for the relative difference in sensitivity between ... mismatched first and second microphones." Section VII(A); Section VII(B), [29b]; APPLE-1008, 5:42-50, FIG. 5.

259. Further, Avendano ’252 teaches that the coefficients of such a filter can be generated during a period when only speech is being received by the first physical microphone and the second physical microphone.

260. For example, Avendano ’252 discloses an “equalization module 412” having a similar signal compensation or correction function as Hou’s filter. APPLE-1006, 2:17-28, 6:9-38, 10:1-59, FIG. 5; APPLE-1003, XX. As Avendano ’252 explains, the “equalization module 412 applies an adaptive equalization coefficient determined based on an adaptation control module 502 and an adaptation processor 504” and “is configured to compensate for microphone mismatch post-manufacturing.” APPLE-1006, 10:1-8.

261. Further, Avendano ’252 discloses that the “equalization coefficient” of the “equation module 412” can be selectively adapted or adjusted based on the presence or absence of speech. APPLE-1006, 10:9-59, 11:56-61. For example, Avendano ’252 discloses an “adaptation control module 502 ... configured to operate as a switch to activate the adaptation processor 504, which will adjust the equalization coefficient.” *Id.,* 10:9-11. This adaption process is “triggered by identifying frames dominated by speech” in two microphones. *Id.*, 10:11-15.

262. Specifically, Avendano ’252 discloses the following regarding the selective activation of the “adaption processor 504” by the “adaption control module 502”:

> The power ratio between the front-facing and back-facing cardioid signals produced by this array may be tracked and used to determine if a signal is active in the forward direction, in which case the adaptive equalization coefficient can be updated. In some embodiments, the equalization coefficient is only adapted for taps with high signal-to-noise ratio (SNR). Thus, the adaptation control module 502 may look for both a signal and proper direction. Adaptation may be performed when the probability that the observed components correspond to speech coming from the desired direction (e.g., from the front direction). In these situations, the adaptation control module 502 may have a value of one. However, if a weak signal or no signal is being received from the front/forward direction, then the value from the adaption control module 502 may be zero. If adaptation is determined to be required, then the adaptation control module 502 sends instructions to the adaptation processor 504.

Id., 10:20-36.

263. Further, as Avendano '252 explains, this process is beneficial in adapting "cardioid patterns ... to compensate for microphone mismatch." *Id.,* 10:1-8. For example, this process enables a system to generate "a null of a backward-facing cardioid pattern to be directed towards a desired audio source." *Id.* Further, "[t]he

resulting signals from the adaptation may then be utilized in a noise suppression system and/or speech enhancement system." *Id.*, 2:63-3:7.

264. A POSITA would have recognized that Avendano '252's "equalization module 412" and Hou's filter serve a similar purpose, namely compensating for a difference in sensitivity between mismatched microphones to generate directional signals. APPLE-1006, 6:30-38, 10:1-59, FIGS. 4b-5; APPLE-1008, 5:26-6:22, 9:28-41, FIG. 5. Further, in view of Avendano '252, a POSITA would have recognized that selectively adapting Hou's filter based on the presence or absence of speech would enhance the separation of speech and noise in a directional signal (*e.g.,* a cardioid signal) and improve the performance of a noise suppression system and/or speech enhancement system. APPLE-1006, 10:1-8, 2:63-3:7. Accordingly, a POSITA would have found it obvious to generate the coefficients of Hou's filter during a period when only speech is being received by the first physical microphone and the second physical microphone, as specifically taught by Avendano '252.

IX. CONCLUSION

265. I reserve the right to supplement my opinions to address any information obtained, or positions taken, based on any new information introduced throughout this proceeding.

266. I declare under penalty of perjury that the foregoing is true and accurate to the best of my ability.