Trials@uspto.gov
Tel: 571-272-7822

Paper 11
Date: January 9, 2024

UNITED STATES PATENT AND TRADEMARK OFFICE

BEFORE THE PATENT TRIAL AND APPEAL BOARD

SONY ELECTRONICS INC.,
Petitioner,

v.

JAWBONE INNOVATIONS, LLC,
Patent Owner.

IPR2023-01177
Patent 8,326,611 B2

Before GEORGIANNA W. BRADEN, NORMAN H. BEAMER, and SHEILA F. McSHANE, *Administrative Patent Judges*.

McSHANE, *Administrative Patent Judge*.

DECISION
Granting Institution of *Inter Partes* Review
35 U.S.C. § 314
Dismissing Petitioner's Motion for Joinder
35 U.S.C. § 315(c); 37 C.F.R. § 42.122

I. INTRODUCTION

Sony Electronics Inc. ("Petitioner")[1] filed a Petition requesting an *inter partes* review of claims 1–28 in U.S. Patent No. 8,326,611 B2 (Ex. 1001, "the '611 patent") under 35 U.S.C. §§ 311–319, with the supporting declaration of Dr. Thomas W. Kenny. Paper 1 ("Pet."); Ex. 1003. Jawbone Innovations, LLC ("Patent Owner")[2] filed a Preliminary Response, with the supporting declaration of Dr. Akbar M. Sayeed. Paper 8 ("Prelim. Resp."); Ex. 2002.

Concurrently with the Petition, Petitioner filed a Motion for Joinder seeking joinder as a party in *Amazon.com, Inc. v. Jawbone Innovations, LLC*, IPR2023-00286 ("the Amazon IPR") and consolidation with the Amazon IPR. Paper 3. Patent Owner filed an Opposition to the Motion for Joinder. Paper 7.

Institution of an *inter partes* review is authorized by statute when "the information presented in the petition . . . and any response . . . shows that there is a reasonable likelihood that the petitioner would prevail with respect to at least 1 of the claims challenged in the petition." 35 U.S.C. § 314(a) (2018). Upon consideration of the Petition, the Preliminary Response, and the evidence of record, and for the reasons explained below, we determine Petitioner has shown that there is a reasonable likelihood that it would prevail with respect to at least one of the challenged claims. Thus, we

---

[1] Petitioner identifies itself, Sony Electronics Inc., as well as Sony Group Corporation, Sony Corporation, and Sony Corporation of America, as the real parties-in-interest. Pet. 93.

[2] Patent Owner identifies itself, Jawbone Innovations, LLC, as the real party-in-interest. Paper 6, 2.

institute an *inter partes* review of claims 1–28 in the ’611 patent on all challenges included in the Petition.

Additionally, as discussed below, we deny Petitioner’s Motion for Joinder as moot.

II. BACKGROUND

A. Related Matters

Petitioner and Patent Owner identify the following civil actions as related matters involving the ’611 patent:

- *Jawbone Innovations, LLC v. Samsung Electronics Co., Ltd.*, No. 2:21-cv-00186 (E.D. Tex. filed May 27, 2021);
- *Jawbone Innovations, LLC v. Google LLC*, No. 6:21-cv-00985 (W.D. Tex. filed Sept. 23, 2021);
- *Jawbone Innovations, LLC v. Amazon.com, Inc.*, No. 2:21-cv-00435 (E.D. Tex. filed Nov. 29, 2021);
- *Jawbone Innovations, LLC v. Amazon.com, Inc.*, No. 3:22-cv-06727 (N.D. Cal. (filed Nov. 29, 2021 in E.D. Tex. and transferred on Nov. 1, 2022));
- *Jawbone Innovations, LLC v. Google LLC*, No. 3:23-cv-00466 (N.D. Cal. filed Feb. 1, 2023);
- *Jawbone Innovations, LLC v. HTC Corp.*, No. 2:23-cv-00077 (E.D. Tex. filed Feb. 28, 2023);
- *Jawbone Innovations, LLC v. LG Electronics, Inc.*, No. 2:23-cv-00078 (E.D. Tex. filed Feb. 28, 2023);
- *Jawbone Innovations, LLC v. Guandong Oppo Mobile Telecom. Corp.*, No. 2:23-cv-00079 (E.D. Tex. filed Feb. 28, 2023);
- *Jawbone Innovations, LLC v. Panasonic Holdings Corp.*, No. 2:23-cv-00081 (E.D. Tex. filed Feb. 28, 2023);
- *Jawbone Innovations, LLC v. ZTE Corp.*, No. 2:23-cv-00082 (E.D. Tex. filed Feb. 28, 2023);

- *Jawbone Innovations, LLC v. Meta Platforms, Inc.*, No. 6:23-cv-00158 (W.D. Tex. filed Feb. 28, 2023); and
- *Jawbone Innovations, LLC v. Sony Elec., Inc.*, No. 2:23-cv-01161 (D.N.J. filed Feb. 28, 2023).

Pet. 94; Paper 6, 3.

Petitioner and Patent Owner identify the following Board proceedings as related matters involving the ’611 patent:

- *Amazon.com, Inc. v. Jawbone Innovations, LLC*, IPR2023-00285 (PTAB filed Nov. 28, 2022);
- *Amazon.com, Inc. v. Jawbone Innovations, LLC*, IPR2023-00286 (PTAB filed Nov. 28, 2022);
- *Meta Platforms, Inc. v. Jawbone Innovations, LLC*, IPR2023-01128 (PTAB filed June 27, 2023);
- *Meta Platforms, Inc. v. Jawbone Innovations, LLC*, IPR2023-01129 (PTAB filed June 27, 2023);
- *Google LLC v. Jawbone Innovations, LLC*, IPR2023-01131 (PTAB filed July, 7, 2023);
- *Google LLC v. Jawbone Innovations, LLC*, IPR2023-01132 (PTAB filed July, 7, 2023);
- *LG Electronics Inc. v. Jawbone Innovations, LLC*, IPR2023-01155 (PTAB filed July, 6, 2023);
- *LG Electronics Inc. v. Jawbone Innovations, LLC*, IPR2023-01156 (PTAB filed July, 6, 2023); and
- *Sony Electronics Inc. v. Jawbone Innovations, LLC*, IPR2023-01176 (PTAB filed July, 6, 2023).

Pet. 94; Paper 6, 2.

B. The '611 Patent (Ex. 1001)

The '611 patent, titled "Acoustic Voice Activity Detection (AVAD) for Electronic Systems," issued on December 4, 2012, from an application filed on October 26, 2009. Ex. 1001, codes (22), (45), (54). The patent identifies that application as a continuation-in-part of the following applications: (1) U.S. Patent Application No. 11/805,987, filed on May 25, 2007; and (2) U.S. Patent Application No. 12/139,333, filed on June 13, 2008. *Id.* at 1:8–11, code (63). The patent claims priority to U.S. Provisional Patent Application No. 61/108,426, filed on October 24, 2008. *Id.* at 1:6–7, code (60). The patent states that the disclosure "relates generally to noise suppression" and, more particularly, "to noise suppression systems, devices, and methods for use in acoustic applications." *Id.* at 1:16–19; *see id.* at code (57).

The '611 patent explains that the "ability to correctly identify voiced and unvoiced speech is critical to many speech applications including speech recognition, speaker verification, noise suppression, and many others." Ex. 1001, 1:23–26. In "the speaker's environment," however, "there may exist one or more noise sources that pollute the speech signal, the signal of interest, with unwanted acoustic noise." *Id.* at 1:28–31. The unwanted acoustic noise "makes it difficult or impossible for the receiver, whether human or machine, to understand the user's speech." *Id.* at 1:31–32.

The '611 patent explains that "[t]ypical methods for classifying voiced and unvoiced speech have relied mainly on the acoustic content of single microphone data, which is plagued by problems with noise and the corresponding uncertainties in signal content." Ex. 1001, 1:33–36.

According to the patent, non-acoustic methods "have been employed successfully in commercial products," but "an acoustic-only solution is desired in some cases (e.g., for reduced cost, as a supplement to the non-acoustic sensor, etc.)." *Id.* at 1:41–46.

The '611 patent discloses "Acoustic Voice Activity Detection (AVAD) methods and systems" that use physical microphones "to generate virtual directional microphones which have very similar noise responses and very dissimilar speech responses." Ex. 1001, 3:57–62, code (57); *see id.* at 4:21–25, 5:35–52, 17:43–45. "The ratio of the energies of the virtual microphones is then calculated over a given window size and the ratio can then be used with a variety of methods to generate a VAD signal." *Id.* at 3:62–65, code (57). "The virtual microphones can be constructed using either a fixed or an adaptive filter." *Id.* at 3:65–66, code (57); *see id.* at 4:27–30.

The '611 patent defines various terms. Ex. 1001, 17:57–18:32. The patent includes the following definitions:

- The term "speech" means desired speech of the user.
- The term "noise" means unwanted environmental acoustic noise.
- The term "O_1" means a first physical omnidirectional microphone used to form a microphone array.
- The term "O_2" means a second physical omnidirectional microphone used to form a microphone array.
- The term "virtual microphones (VM)" or "virtual directional microphones" means a microphone constructed using two or more omnidirectional microphones and associated signal processing.

- The term "V_1" means the virtual directional "speech" microphone, which has no nulls.
- The term "V_2" means the virtual directional "noise" microphone, which has a null for the user's speech.

Id. at 18:10–32.

The '611 patent explains that "V_2 is configured in such a way that it has minimal response to the speech of the user" and "V_1 is configured so that it does respond to the user's speech but has a very similar noise magnitude response to V_2." Ex. 1001, 4:21–25. "A further refinement is the use of an adaptive filter to further minimize the speech response of V_2." *Id.* at 4:27–28; *see id.* at 6:10–11.

The '611 patent's Figure 3 (reproduced below) depicts a block diagram of a virtual microphone V_2:

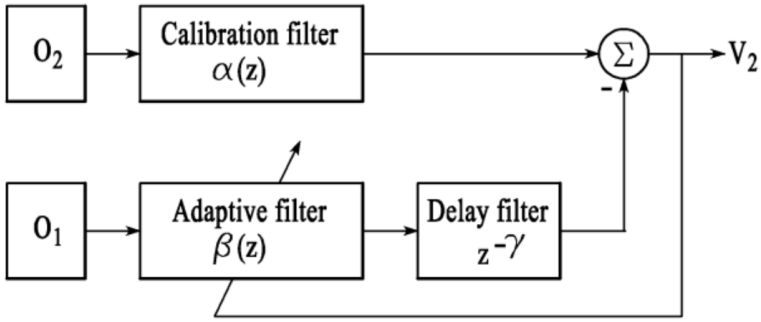

FIG.3

Figure 3, above, illustrates the following components where "z" denotes a discrete frequency domain and "γ" is a fixed delay that depends on the size of the microphone array:

(1) a physical omnidirectional microphone O_1 providing a signal to an adaptive filter β(z);

(2) the adaptive filter β(z) providing a signal to a delay filter $z^{-\gamma}$;

(3) a physical omnidirectional microphone O_2 providing a signal to a calibration filter $\alpha(z)$;

(4) a summing circuit (Σ) summing (i) a positive signal from the calibration filter $\alpha(z)$ and (ii) a negative signal from the delay filter $z^{-\gamma}$ to form a virtual microphone V_2; and

(5) the virtual microphone V_2 providing a signal to the adaptive filter $\beta(z)$.

See Ex. 1001, 1:62–63, 4:41, 5:22–33, 6:1–16, Fig. 3.

The ’611 patent’s Figure 4 (reproduced below) depicts a block diagram of a virtual microphone V_1:

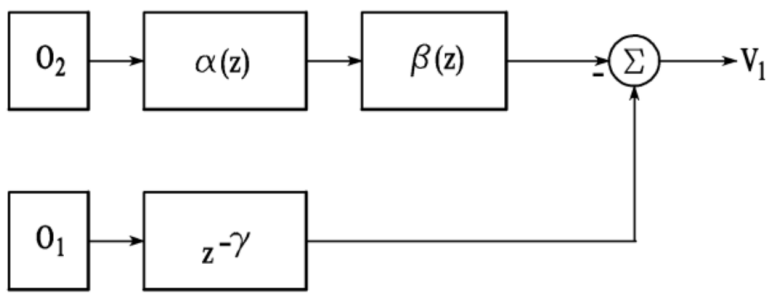

FIG.4

Figure 4, above, illustrates the following components where “z” denotes a discrete frequency domain and “γ” is a fixed delay that depends on the size of the microphone array. *See* Ex. 1001, 1:64–65, 4:41, 5:22–33, 6:17–19, Fig. 4.

The ’611 patent’s Figure 5 (reproduced below) depicts a flow diagram of acoustic voice activity detection:

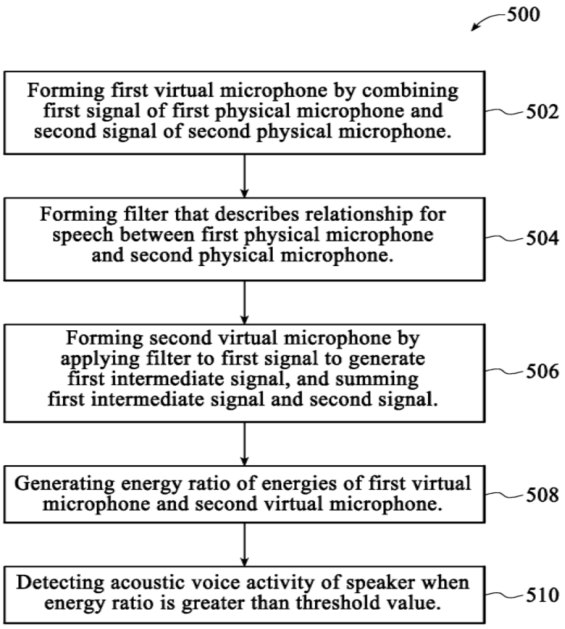

FIG.5

Figure 5, above, illustrates "acoustic voice activity detection 500" including steps 502 through 510. Ex. 1001, 1:66–67, 6:60–61, Fig. 5.

At step 502, the "detection comprises forming a first virtual microphone by combining a first signal of a first physical microphone and a second signal of a second physical microphone." Ex. 1001, 6:61–64, Fig. 5. At step 504, the "detection comprises forming a filter that describes a relationship for speech between the first physical microphone and the second physical microphone." *Id.* at 6:64–67, Fig. 5. At step 506, the "detection comprises forming a second virtual microphone by applying the filter to the first signal to generate a first intermediate signal, and summing the first intermediate signal and the second signal." *Id.* at 6:67–7:3, Fig. 5. At step 508, the "detection comprises generating an energy ratio of energies of the first virtual microphone and the second virtual microphone." *Id.* at 7:3–5, Fig. 5. At step 510, the "detection comprises detecting acoustic

voice activity of a speaker when the energy ratio is greater than a threshold value." *Id.* at 7:5–7, Fig. 5.

C. The Challenged Claims

Petitioner challenges independent claim 1, as well as claims 2–28, which depend directly or indirectly from claim 1. Pet. 1, 7–87.

Claim 1, which is illustrative, is reproduced below, with bracketed letters provided by Petitioner added to limitations for reference purposes.

> 1. [1pre] A method comprising:
>
> [1a] forming a first virtual microphone by combining a first signal of a first physical microphone and a second signal of a second physical microphone;
>
> [1b] forming a filter that describes a relationship for speech between the first physical microphone and the second physical microphone;
>
> [1c] forming a second virtual microphone by applying the filter to the first signal to generate a first intermediate signal, and summing the first intermediate signal and the second signal;
>
> [1d] generating an energy ratio of energies of the first virtual microphone and the second virtual microphone; and
>
> [1e] detecting acoustic voice activity of a speaker when the energy ratio is greater than a threshold value.

Ex. 1001, 36:61–37:8.

At this stage of the proceeding, Patent Owner does not dispute that each reference qualifies as prior art. *See, e.g.*, Prelim. Resp. 13–21.

D. Asserted Challenges to Patentability

Petitioner asserts the following challenges to patentability:

Claim(s) Challenged	35 U.S.C. §	Reference(s)/Basis
1–7, 25–28	103(a)[3]	Avendano[4], Visser[5]
8–16, 23, 24	103(a)	Avendano, Visser, Bisgaard[6]
17–19	103(a)	Avendano, Visser, Bisgaard, Hou[7]
20–22	103(a)	Avendano, Visser, Bisgaard, Hou, Byrne[8]
20–22	103(a)	Avendano, Visser, Bisgaard, Hou, Burnett[9]
20–22	103(a)	Avendano, Visser, Bisgaard, Hou, Berglund[10]

Pet. 1, 7–87.

[3] The Leahy-Smith America Invents Act ("AIA"), Pub. L. No. 112-29, 125 Stat. 284 (2011), amended 35 U.S.C. § 102 and § 103 effective March 16, 2013. Because the filing date of the challenged claims predates the AIA's amendment to § 103, this decision refers to the pre-AIA version of § 103.
[4] US 8,194,880 B2, issued June 5, 2012 (Ex. 1005, "Avendano").
[5] US 7,464,029 B2, issued December 9, 2008 (Ex. 1006, "Visser").
[6] US 2011/0103626 A1, published May 5, 2011 (Ex. 1010, "Bisgaard").
[7] US 7,155,019 B2, issued December 26, 2006 (Ex. 1008, "Hou").
[8] Denis Byrne et al., An International Comparison of Long-Term Average Speech Spectra, The Journal of the Acoustical Society of America, Vol. 96, No. 4, 2108–20 (October 1994) (Ex. 1009, "Byrne").
[9] US 2002/0198705 A1, published December 26, 2002 (Ex. 1012, "Burnett").
[10] Birgitta Berglund et al., Sources and Effects of Low-Frequency Noise, The Journal of the Acoustical Society of America, Vol. 99, No. 5, 2985–3002 (May 1996) (Ex. 1013, "Berglund").

III. MOTION FOR JOINDER

Concurrently with the Petition, Petitioner filed a Motion for Joinder seeking joinder as a party in the Amazon IPR and consolidation with the Amazon IPR. Paper 3, 1. In August 2023, the Board terminated the Amazon IPR in view of representations by Amazon and Patent Owner that they had settled their dispute in the Amazon IPR and related district court litigation. IPR2023-00286, Paper 16, 2.

We dismiss Petitioner's Motion for Joinder as moot in view of the Amazon IPR termination.

IV. ANALYSIS

A. Level of Ordinary Skill in the Art

Petitioner asserts that "[a] person of ordinary skill in the art would have at least a bachelor of science in electrical engineering, computer engineering, computer science, mechanical engineering, or a related discipline, with at least two years of relevant experience in a field related to acoustics, speech recognition, speech detection, or signal processing." Pet. 6. Petitioner also asserts that "[a]dditional education or industry experience may compensate for a deficit in the other." *Id.* Dr. Kenny's testimony supports Petitioner's assertions. *See* Ex. 1003 ¶¶ 22–23.

Patent Owner asserts that "[a] person of ordinary skill in the art would have a bachelor's degree in computer engineering, computer science, electrical engineering, mechanical engineering, or a similar field, and approximately three years of industry or academic experience in a field related to acoustics, speech recognition, speech detection, or signal processing." Prelim. Resp. 13. Patent Owner also asserts that "[w]ork experience can substitute for formal education and additional formal

education can substitute for work experience." *Id.* Dr. Sayeed's testimony supports Patent Owner's assertions. *See* Ex. 2002 ¶ 26.

Petitioner and Patent Owner's proposed levels of skill in the art are similar, except that Patent Owner proposes slightly more experience, i.e., "approximately three years of industry or academic experience" versus "at least two years of relevant experience." Prelim. Resp. 13; Pet. 6. Based on the current record and for purposes of analysis, we accept Petitioner's description of an ordinarily skilled artisan, with the exception of the qualifier "at least" with respect to experience which renders the level of ordinary skill in the art ambiguous and may encompass levels beyond ordinary, as it is consistent with the '611 patent and the asserted prior art.

B. Claim Construction

We construe claim terms "using the same claim construction standard" that district courts use to construe claim terms in civil actions under 35 U.S.C. § 282(b). *See* 37 C.F.R. § 42.100(b). Under that standard, claim terms "are given their ordinary and customary meaning, which is the meaning the term would have to a person of ordinary skill in the art at the time of the invention." *Power Integrations, Inc. v. Fairchild Semiconductor Int'l, Inc.*, 904 F.3d 965, 971 (Fed. Cir. 2018) (citing *Phillips v. AWH Corp.*, 415 F.3d 1303, 1312–13 (Fed. Cir. 2005) (en banc)). The meaning of claim terms may be determined by "look[ing] principally to the intrinsic evidence of record, examining the claim language itself, the written description, and the prosecution history, if in evidence." *DePuy Spine, Inc. v. Medtronic Sofamor Danek, Inc.*, 469 F.3d 1005, 1014 (Fed. Cir. 2006) (citing *Phillips*, 415 F.3d at 1312–17).

Petitioner contends that "[n]o formal claim constructions are necessary." Pet. 6.

Patent Owner proposes a claim construction for the claim 1 term "filter that describes a relationship for speech between the first physical microphone and the second physical microphone." Prelim. Resp. 10. Specifically, Patent Owner asserts that this term should be construed as "[a] filter that alters the magnitude of a signal based on the relative responses to speech of the first and second physical microphones." *Id.* Patent Owner argues that the '611 patent Specification "specifically identifies β(z) as the filter describing the relationship for speech." *Id*. at 11 (citing Ex. 1001, 5:31–32). Patent Owner refers to the disclosure on the two methods disclosed in the '611 patent for the determination of β(z), and further contends that a person of ordinary skill in the art would understand "that the 'filter that describes a relationship for speech between the first physical microphone and the second physical microphone' refers to 'a filter that alters the magnitude of a signal based on the relative responses to speech of the first and second physical microphones.'" *Id*. at 12 (citing Ex. 2002 ¶ 43).

Patent Owner additionally asserts that a person of ordinary skill in the art would not understand that the claimed filter of claim 1 would be a delay node because dependent claim 7 recites "comprising applying a delay to the first intermediate signal."[11] Prelim. Resp. 16. That is, Patent Owner argues, a person of skill "would know that applying two delays in succession is equivalent to applying a single delay for the sum of those two delays," and

[11] The Preliminary Response refers to the independent claim as "claim 14" and the dependent claim as "claim 17," however, in context, the references appear to be directed to claim 1 and claim 7, respectively. Prelim. Resp. 16.

"would realize that the filter cannot be a delay filter; otherwise the claim would simply recite 'wherein the filter is a delay filter' or similar language." *Id*. (citing Ex. 2002 ¶ 62).

In regards to Patent Owner's position that the filter β(z) described in the Specification is the claimed filter (Prelim. Resp. 11), we note that "the specification may reveal a special definition given to a claim term by the patentee that differs from the meaning it would otherwise possess." *Phillips*, 415 F.3d at 1316. However, "[t]o act as its own lexicographer, a patentee must 'clearly set forth a definition of the disputed claim term' other than its plain and ordinary meaning." *Thorner v. Sony Comput. Entm't Am. LLC*, 669 F.3d 1362, 1365 (Fed. Cir. 2012) (quoting *CCS Fitness, Inc. v. Brunswick Corp.*, 288 F.3d 1359, 1366 (Fed. Cir. 2002)). Moreover, "the specification may reveal an intentional disclaimer, or disavowal, of claim scope," and it is the inventor's disavowal that is dispositive of the claim construction. *Phillips*, 415 F.3d at 1316; *see also Retractable Techs., Inc. v. Becton, Dickinson & Co*., 653 F.3d 1296, 1306 (Fed. Cir. 2011) (quoting *Epistar Corp. v. Int'l Trade Comm'n*, 566 F.3d 1321, 1335 (Fed. Cir. 2009) ("To disavow claim scope, the specification must contain 'expressions of manifest exclusion or restriction, representing a clear disavowal of claim scope.'")). Furthermore, it is impermissible to read a particular embodiment appearing in the written description into the claim if the claim language is broader than the embodiment. *See SuperGuide Corp. v. DirecTV Enterprises, Inc*., 358 F.3d 870, 875 (Fed. Cir. 2004).

Our view, at this juncture, is that the Specification does not indicate that there is an intended "special definition" for the term "filter that describes a relationship for speech between the first physical microphone

and the second physical microphone." Moreover, the Specification does not contain an express any disavowal of the scope of the claim term to limit the scope of the term to Patent Owner's relied-upon citation to the disclosure relating to β(z). *See* Ex. 1001, 5:31–32. Accordingly, on this record, in the absence of a special definition of the term, we decline to import limitations into the claim term and read in the β(z) embodiment only into the term.

Patent Owner also asserts that its proposed claim construction should be adopted because under a broad claim construction the term could include a delay filter, but then in view of dependent claim 7, this would result in applying two delays in succession. Prelim. Resp. 16. Patent Owner, with Dr. Sayeed's supporting testimony, asserts that because "[a]pplying two delays in succession is equivalent to applying a single delay for the sum of those two delays," so a person of skill in the art would realize the filter at issue cannot be a delay filter. *Id.*; Ex. 2002 ¶ 62. On this record, we find that Patent Owner's assertion, and the supporting testimony, fail to provide support explaining why two delays in succession would not be acceptable. The parties may present additional briefing on this issue during trial.

At this juncture, we further determine that no other claim term requires an explicit construction to decide whether Petitioner satisfies the "reasonable likelihood" standard for instituting trial. "[O]nly those terms need be construed that are in controversy, and only to the extent necessary to resolve the controversy." *Vivid Techs., Inc. v. Am. Sci. & Eng'g, Inc.*, 200 F.3d 795, 803 (Fed. Cir. 1999); *see Nidec Motor Corp. v. Zhongshan Broad Ocean Motor Co.*, 868 F.3d 1013, 1017 (Fed. Cir. 2017).

C. Principles of Law

A patent claim is unpatentable under 35 U.S.C. § 103 if "the differences between the claimed invention and the prior art are such that the claimed invention as a whole would have been obvious before the effective date of the claimed invention to a person having ordinary skill in the art to which said subject matter pertains." 35 U.S.C. § 103 (2011); *see also KSR Int'l Co. v. Teleflex Inc.*, 550 U.S. 398, 406 (2007). The question of obviousness is resolved on the basis of underlying factual determinations including (1) the scope and content of the prior art; (2) any differences between the claimed subject matter and the prior art; (3) the level of ordinary skill in the art; and (4) when in evidence, objective indicia of nonobviousness.[12] *Graham v. John Deere Co.*, 383 U.S. 1, 17–18 (1966).

D. Alleged Obviousness of Claims 1–7 and 25–28 Over Avendano and Visser

Petitioner contends that claims 1–7 and 25–28 are unpatentable under § 103(a) as obvious over Avendano and Visser. *See* Pet. 1, 7–40. Petitioner provides the declaration of Dr. Thomas W. Kenny[13] in support. Ex. 1003.

---

[12] No evidence of objective indicia of nonobviousness is presented in Patent Owner's Preliminary Response. *See generally* Prelim. Resp.

[13] Dr. Kenny was retained as an expert by non-party Apple, Inc. in IPR2022-01085, which challenged certain claims of the '611 patent based on the same prior art as asserted in the present Petition. *See* Ex. 1003 ¶ 16; IPR2022-01085, Ex. 1003. We remind the parties of their obligation under Rule 42.51(b)(1)(ii), which allows for cross examination of affidavit testimony as routine discovery. *See John's Lone Star Distrib., Inc. v. Thermolife Int'l, Inc.*, IPR2014-01201 (PTAB May 13, 2015) (Paper 31) (petitioner submitted affidavit testimony from a witness triggering cross-examination under 37 C.F.R. § 42.51(b)(1), and because petitioner did not make that witness available for cross-examination, the Board expunged the testimony.); *IBG LLC et al. v. Trading Technologies Internationale, Inc.*,

Patent Owner disputes Petitioner's contentions, asserting that the prior art does not teach certain claim limitations and that one of skill in the art would not be motivated to combine Avendano and Visser. *See* Prelim. Resp. 14–20. Patent Owner relies on the supporting declaration of Dr. Sayeed. Ex. 2002.

We begin our discussion with brief summaries of Avendano and Visser, and then address the evidence and arguments presented.

1. Avendano (Ex. 1005)

Avendano is a U.S. patent titled "System and Method for Utilizing Omni-Directional Microphones for Speech Enhancement," filed on January 29, 2007, and issued on June 5, 2012. Ex. 1005, codes (12), (22), (45), (54). Avendano states that the invention "relates generally to audio processing." *Id.* at 1:24; *see id.* at code (57).

Avendano discloses systems and methods "for utilizing inter-microphone level differences (ILD) to attenuate noise and enhance speech." Ex. 1005, 2:5–7, 3:13–17, code (57). Preferably, "the ILD is based on energy level differences of a pair of omni-directional microphones." *Id.* at 2:7–9, code (57). For example, "a primary acoustic signal is received by a primary microphone, and a secondary acoustic signal is received by a secondary microphone." *Id.* at 2:14–17, code (57). "The primary and secondary acoustic signals are converted into primary and secondary electric signals for processing." *Id.* at 2:17–19, code (57).

CBM2015-00179 (PTAB Apr. 15, 2016) Paper 39, 3 (The Board determined that it was the petitioner's responsibility to produce the witness for cross-examination, because that deposition was the sole evidence that a reference was prior art.).

"A differential microphone array (DMA) module processes the primary and secondary electric signals to determine a cardioid primary signal and a cardioid secondary signal." Ex. 1005, 2:20–22, code (57). Preferably, "the primary and secondary electric signals are delayed by a delay node." *Id.* at 2:22–24. "The cardioid primary signal is then determined by taking a difference between the primary electric signal and the delayed secondary electric signal, while the cardioid secondary signal is determined by taking a difference between the secondary electric signal and the delayed primary electric signal." *Id.* at 2:24–29.

"The cardioid signals are filtered through a frequency analysis module" that "takes the signals and mimics the frequency analysis of the cochlea (i.e., cochlear domain)." Ex. 1005, 2:34–36, code (57). "Energy levels associated with the cardioid primary signal and the cardioid secondary signals are then computed (e.g., as power estimates) and the results are processed by an ILD module" to obtain the ILD. *Id.* at 2:41–45, code (57). The ILD module may obtain the ILD by "using a non-linear combination," e.g., by "dividing the power estimate associated with the cardioid primary signal by the power estimate associated with the cardioid secondary signal." *Id.* at 2:44–48, code (57). The ILD "may then be used" to (1) "suppress unwanted sound sources" and (2) "enhance the speech of the primary acoustic signal." *Id.* at 2:48–50, code (57).

Avendano's Figure 1a (reproduced below) is a drawing depicting an environment for practicing embodiments of Avendano's invention:

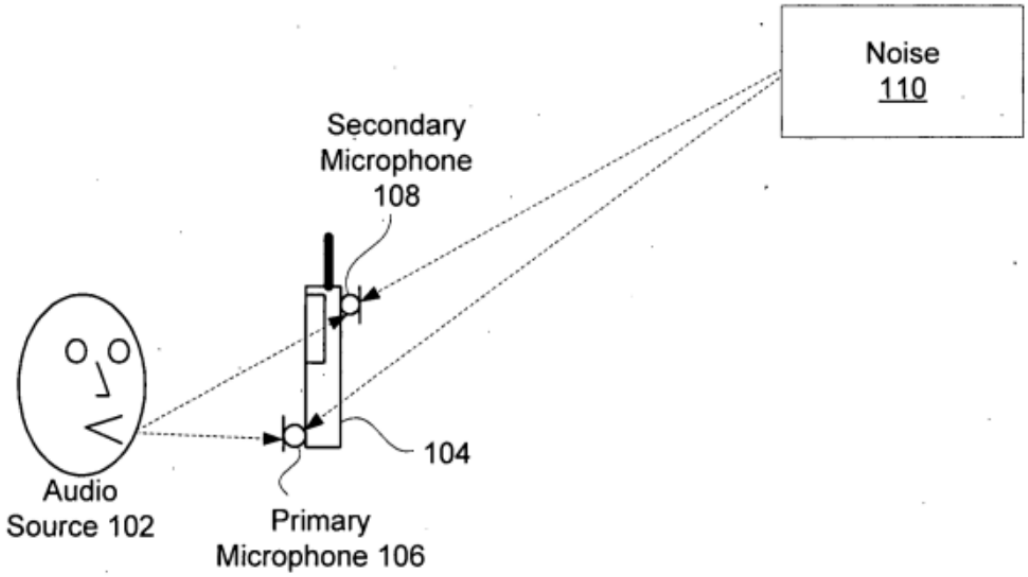

FIG. 1a

Figure 1a, above, illustrates a user who "provides an audio (speech) source 102 to an audio device 104" comprising two microphones: "a primary microphone 106 relative to the audio source 102 and a secondary microphone 108 located a distance, d, away from the primary microphone 106." Ex. 1005, 3:27–33, Fig. 1a. Preferably, "the microphones 106 and 108 are omni-directional microphones." *Id.* at 3:33–35.

"While the microphones 106 and 108 receive sound (i.e., acoustic signals) from the audio source 102, the microphones 106 and 108 also pick up noise 110." Ex. 1005, 3:36–38, Fig. 1a. Noise 110 "may comprise any sounds from one or more locations different than the audio source 102" and "may include reverberations and echoes." *Id.* at 3:38–42.

Avendano's Figure 4a (reproduced below) is a block diagram depicting an embodiment of audio processing engine 204:

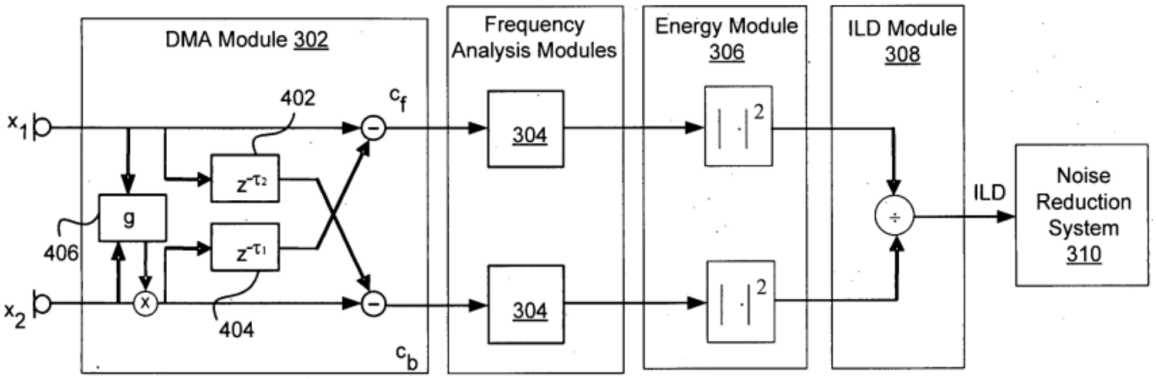

FIG. 4a

Figure 4a, above, illustrates one implementation of audio processing engine 204 including differential microphone array (DMA) module 302, frequency-analysis module 304, energy module 306, ILD module 308, and noise-reduction system 310. Ex. 1005, 2:61–63, 5:15–17, 6:36–40, Fig. 4a; *see id.* at 2:20. As Figure 4a shows, DMA module 302 receives an electric signal x_1 corresponding to the primary acoustic signal X_1 and an electric signal x_2 corresponding to the secondary acoustic signal X_2. *See id.* at 4:6–8, 4:23–27, 5:17–20, Fig. 4a.

After receiving the electric signals x_1 and x_2, DMA module 302 determines "sounds and signals in a front and back cardioid region about" audio device 104 by "delaying and subtracting the acoustic signals captured by the microphones 106 and 108." Ex. 1005, 4:29–33. By doing so, DMA module 302 creates "directional patterns" for the microphones. *Id.* at 4:27–29; *see id.* at 4:40–46.

For example, "one directional pattern created by the DMA module 302 allows sounds generated from an audio source 102 within a

front cardioid region around the audio device 104 to be received," and "a second pattern allows sounds from a second audio source 102 within a back cardioid region around the audio device 104 to be received." Ex. 1005, 4:47–52. "Sounds from audio sources 102 beyond these regions may also be received but the sounds may be attenuated." *Id.* at 4:52–54.

2. Visser (Ex. 1006)

Visser is a U.S. patent titled "Robust Separation of Speech Signals in a Noisy Environment," filed on July 22, 2005, and issued on December 9, 2008. Ex. 1006, codes (12), (22), (45), (54). Visser states that the invention "relates to processes and methods for separating a speech signal from a noisy acoustic environment." *Id.* at 1:19–20; *see id.* at 6:57–59, code (57).

Visser discloses methods for separating speech signals from noise sources, including independent component analysis (ICA) and blind signal (or source) separation (BSS). *See, e.g.*, Ex. 1006, 3:3–20, 8:16–19, 14:33–40, 16:6–27, 18:1–4, 18:26–29. As an example of a method for separating speech signals from noise sources, "a signal separation process is associated with a voice activity detector," e.g., "a two-channel detector." *Id.* at 6:59–61, code (57). "When speech is detected, the voice activity detector generates a control signal." *Id.* at 6:63–64, code (57). "The control signal is used to activate, adjust, or control signal separation processes or post-processing operations to improve the quality of the resulting speech signal." *Id.* at 6:64–67, code (57).

Visser explains that a speech-separation process "may be adaptive and learn according to the specific acoustic environment" and "may also adapt to particular microphone placement, the acoustic environment, or a particular user's speech." Ex. 1006, 9:8–12. For example, a speech-separation process

may include "a set of filters with adaptive filter coefficients." *Id.* at 16:62–65. As the process operates, "the coefficients are adjusted to improve separation performance," and "the new coefficients are applied and used" in the filters. *Id.* at 16:65–17:2, Fig. 9. The "continual adaptation of the filter coefficients enables the process" to "provide a sufficient level of separation, even in a changing acoustic environment." *Id.* at 17:2–4.

Visser's Figure 1 (reproduced below) is a block diagram depicting a speech-separation process:

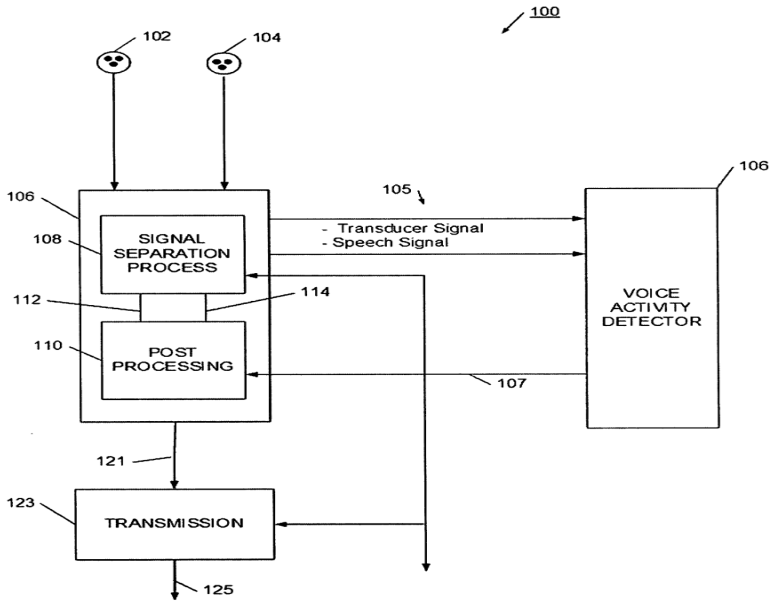

FIG. 1

Figure 1, above, illustrates speech-separation process 100 receiving "a set of signal inputs (e.g., sound signals from microphones) 102 and 104." Ex. 1006, 7:36–37, 8:4–7, Fig. 1. For example, "signal input 102 may be from a microphone arranged to be closest to the speaker's mouth, while signal input 104 may be from a microphone spaced farther away from the speaker's mouth." *Id.* at 8:8–12.

Speech-separation process 100 includes separation process 106 with signal-separation process 108 and post-processing steps 110. Ex. 1006,

8:16–26, Fig. 1. After "the microphones generate a pair of input signals" to signal-separation process 108, process 108 "generates a signal having speech content 112, and a noise-dominant signal 114." *Id.* at 8:19–23, Fig. 1. Then, post-processing steps 110 "accept these signals, and further reduce the noise to generate an output speech signal 121, which may be transmitted 125 by transmission subsystem 123." *Id.* at 8:23–26, Fig. 1.

Speech-separation process 100 also includes voice activity detector (VAD) 106 "to activate, adjust, or control selected signal separation, post processing, or transmission functions." Ex. 1006, 8:27–30, Fig. 1. Upon detecting speech, VAD 106 "generates a control signal 107" that "may be used, for example, to activate the signal separation process only when speech is occurring, thereby increasing stability and saving power." *Id.* at 8:36–40, Fig. 1. Moreover, post-processing steps 110 "may be controlled to more accurately characterize noise, as the characterization process may be limited to times when no speech is occurring." *Id.* at 8:40–43.

Visser's Figure 10 (reproduced below) is a block diagram depicting a sub-module for an ICA or BSS processing function:

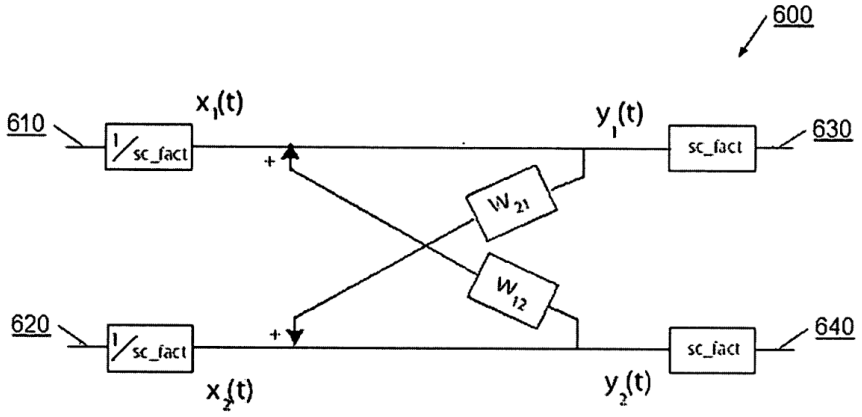

FIG. 10

Figure 10, above, illustrates processing sub-module 600 receiving input signal X_1 on channel 610 and input signal X_2 on channel 620. Ex. 1006, 7:55–57, 17:29–37, Fig. 10. "Typically, each of these signals would come from at least one microphone." *Id.* at 17:37–38.

Sub-module 600 includes cross filters w_{12} and w_{21}. Ex. 1006, 17:39–41, 17:56–64, Fig. 10. Cross filters w_{12} and w_{21} facilitate separating speech signals from noise sources. *See id.* at 16:8–27, 17:56–64. Cross filters w_{12} and w_{21} may have adaptive filter coefficients or fixed filter coefficients. *Id.* at 16:62–65, 17:56–64; *see id.* at 4:6–10, 22:66–67, 23:13–25. For instance, in "a most simplified form," cross filters w_{12} and w_{21} constitute "gain factors with only one filter coefficient per filter," e.g., "a delay gain factor for the time delay between the output signal and the feedback input signal and an amplitude gain factor for amplifying the input signal." *Id.* at 17:58–62.

Cross filters w_{12} and w_{21} "are applied to each of the input signals to produce" the following:

(1) a channel 630 (speech channel) of separated signals U_1 that "contains predominantly desired signals"; and

(2) a channel 640 (noise channel) of separated signals U_2 that "contains predominantly noise signals."

Ex. 1006, 17:39–44, Fig. 10.

The "output signals U_1 and U_2 can be further processed by a post processing sub-module, a de-noising module or a speech feature extraction module." Ex. 1006, 17:64–67. For example, a voice activity detector may use the output signals U_1 and U_2 to determine "when the difference in energy levels between the signals exceeds a predefined threshold." *See id.* at 8:33–35, 12:11–18.

3. Discussion

a. Claim 1

i. Preamble [1pre]

Claim 1 recites "[a] method comprising." Ex. 1001, 36:61.

Petitioner contends that Avendano teaches claim 1's preamble because it discloses "an exemplary method for utilizing ILD of omni-direction microphones for noise suppression and speech enhancement." Pet. 21 (quoting Ex. 1005, 9:43–45) (citing Ex. 1003 ¶ 126; Ex. 1005, 3:12–7:9, 9:43–10:25, Figs. 1a–7).

At this stage, Patent Owner has not presented any disputes specifically related to the preamble.

We have reviewed Petitioner's evidence and arguments and, on this record, we preliminarily determine that Petitioner has presented sufficient evidence for the prior at teaching of the preamble.[14]

ii. Limitation [1a]

Claim 1 recites "[1a] forming a first virtual microphone by combining a first signal of a first physical microphone and a second signal of a second physical microphone." Ex. 1001, 36:62–64.

Petitioner contends that Avendano teaches limitation [1a] because Avendano's audio device 104 comprises:

(1) primary microphone 106 generating a primary acoustic signal X_1 that corresponds to a "first signal of a first physical microphone"; and

[14] We make no finding as to whether the preamble is limiting.

(2) secondary microphone 108 generating a secondary acoustic signal X_2 that corresponds to a "second signal of a second physical microphone."

Pet. 21–22 (citing Ex. 1003 ¶¶ 127–131; Ex. 1005, 3:27–55, 4:20–27, Figs. 1a–1b, 4a–4b). Petitioner also contends that audio device 104 forms a cardioid primary signal C_f corresponding to a "first virtual microphone" by combining the primary acoustic signal X_1 and the secondary acoustic signal X_2. *Id.* at 22–23 (citing Ex. 1005, 4:27–6:10, Figs. 4a–4b).

To support its contentions, Petitioner provides an annotated version of Avendano's Figure 4a as reproduced below (Pet. 23):

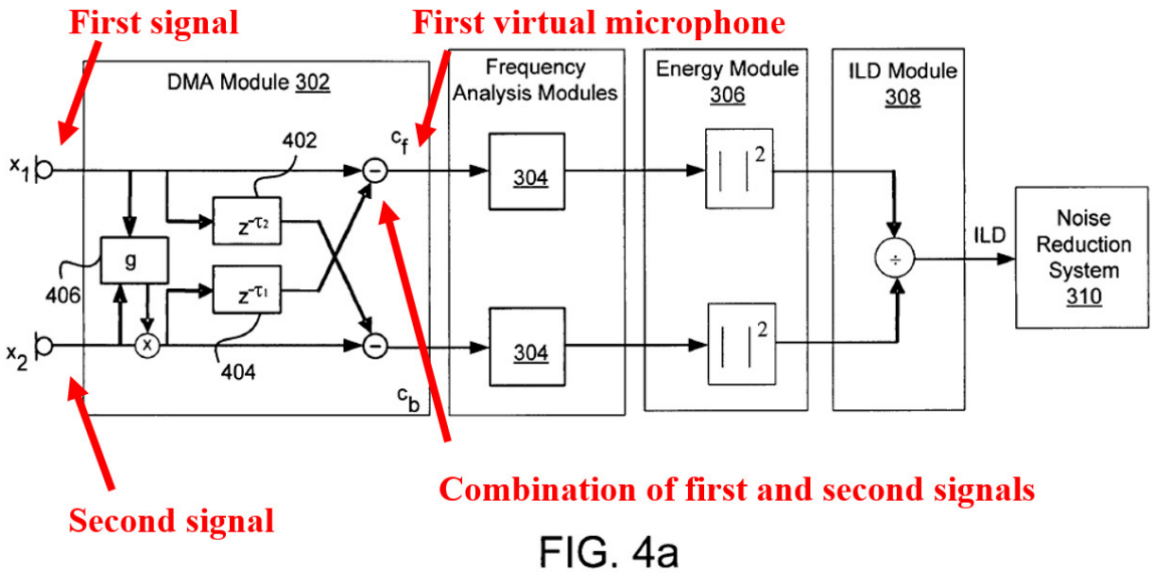

FIG. 4a

Figure 4a illustrates various modules in one implementation of audio processing engine 204 in audio device 104. *See* Ex. 1005, 2:61–63, 5:15–17, 6:36–40, Fig. 4a.

At this stage, Patent Owner presents no arguments specific to limitation [1a]. Nonetheless, the burden remains on Petitioner to demonstrate unpatentability. *See Dynamic Drinkware LLC v. Nat'l Graphics, Inc.*, 800 F.3d 1375, 1378 (Fed. Cir. 2015).

We have reviewed the evidence and argument, and on this record, we preliminarily determine that Petitioner has presented sufficient evidence that the prior art teaches limitation [1a].

iii. Limitation [1b]

Claim 1 recites "[1b] forming a filter that describes a relationship for speech between the first physical microphone and the second physical microphone." Ex. 1001, 36:65–67.

Petitioner contends that Avendano discloses limitation [1b] or, alternatively, that the combined disclosures in Avendano and Visser teach limitation [1b]. *See* Pet. 23–27. First, regarding Avendano's disclosures, Petitioner contends that Avendano's audio device 104 includes delay node 402 implemented with a filter, "which describes a relationship for speech between the first physical microphone and the second physical microphone." *Id*. at 24 (citing Ex. 1003 ¶¶ 133–138; Ex. 1005, 4:28–34, 5:19–35, 8:38–51, Figs. 4a–4b). Petitioner argues that one or Avendano's physical microphones will receive speech prior to the other microphone, which is the "relationship for speech." *Id.* (citing Ex. 1003 ¶ 135). Petitioner asserts that "'delay node 402' delays the first signal, which would otherwise include speech content before the second signal." *Id.* (citing Ex. 1005, 5:15–35). Accordingly, Petitioner contends, "'delay node 402' describes, at least in part, a temporal relationship for speech between the first and second signals" from microphones 106 and 108. *Id.* (citing Ex. 1003 ¶ 136). Petitioner contends that "Avendano's delay nodes are implemented using filters." *Id*. (citing Ex. 1005, 8:38–51).

Second, Petitioner contends that the combined disclosures in Avendano and Visser teach limitation [1b] because "it would have been

obvious to incorporate Visser's 'ICA or BSS processing function' into Avendano's system." Pet. 25. Specifically, Petitioner asserts that:

(1) "Visser's cross filter w_{12} would have been applied to Avendano's second signal x_2," e.g., "to further increase speech content in the first virtual microphone C_f"; and

(2) "Visser's cross filter w_{21} would have been applied to Avendano's first signal x_1," e.g., "to further decrease speech content in the second virtual microphone C_b."

Id. at 25–26 (citing Ex. 1003 ¶¶ 140–141); *see id.* at 20 (citing Ex. 1003 ¶ 120).

To support its assertion, Petitioner provides a modified and annotated version of Avendano's Figure 4a as reproduced below (Pet. 26):

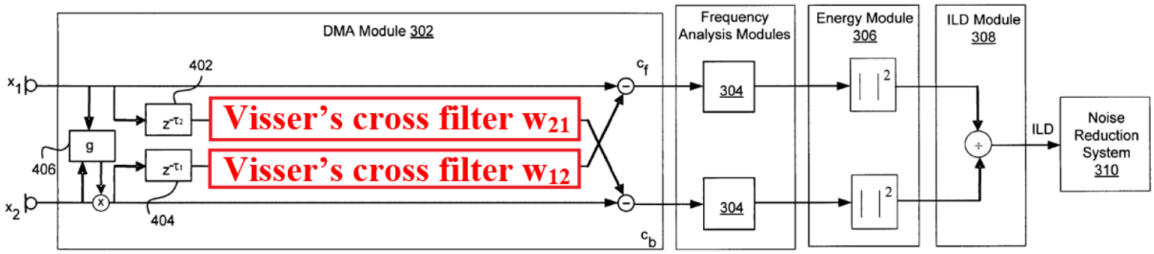

FIG. 4a

Figure 4a, above, illustrates various modules in one implementation of audio processing engine 204 in audio device 104. Ex. 1005, 2:61–63, 5:15–17, 6:36–40, Fig. 4a.

Petitioner asserts that each of Visser's cross filters w_{12} and w_{21} "describes a relationship for speech between first and second physical microphones." Pet. 25 (citing Ex. 1003 ¶¶ 140–141).

Patent Owner disputes that Avendano or the combined disclosures of Avendano and Visser teach limitation [1b]. *See, e.g.*, Prelim. Resp. 15–20. Regarding Avendano's disclosures, Patent Owner asserts that Petitioner fails to show Avendano's delay node 402 describes "forming a filter that alters

the magnitude of a signal based on the relative responses to speech of the first and second physical microphones" under Patent Owner's proposed construction. *Id.* at 15. Rather, Patent Owner argues, the "temporal relationship between the microphones" allegedly described by Avendano's delay node 402 "is exactly the relationship handled by the separate delay filter in the '611 Patent." *Id.* (citing Ex. 2002 ¶ 61; Pet. 24; Ex. 1001, 5:35–51).

On this record, Petitioner has presented sufficient evidence that Avendano teaches limitation [1b]. Specifically, Avendano discloses that there is a first physical microphone that is positioned closer to a source of speech, with a second physical microphone positioned farther from the source of speech, so there is support for Petitioner's contention that one microphone will receive speech prior to the other microphone, that is, there is a "relationship for speech." *See* Pet. 24; Ex. 1005, 3:45–49. There also is support that Avendano's "delay node 402" delays the first signal, where the delay nodes are implemented with filters. *See* Pet. 24; Ex. 1005, 5:15–35, 8:38–51. Accordingly, we preliminary determine that Avendano teaches the claimed forming of a "filter that describes a relationship for speech between the first physical microphone and the second physical microphone." At this juncture, we are not persuaded by Patent Owner's arguments because we have not adopted Patent Owner's proposed more limiting claim construction.

Regarding the combined disclosures in Avendano and Visser, Patent Owner asserts that "a POSITA would not make the combination because it would not function for its intended purpose and because Visser teaches away from Petitioner's combination." Prelim. Resp. 17. Specifically, Patent Owner argues that by including "only Visser's w_{12} and w_{21} filters,"

Petitioner's combination omits the necessary "feedback to effectively separate noise and speech." *Id.* at 17–18. That is, "[a] POSITA would not believe that the filters would work for their intended purpose without the feedback circuitry." *Id.* at 19–20. Furthermore, Patent Owner argues "Visser teaches away from removing the feedback structure." *Id.* at 20.

On this record, we preliminarily find that Petitioner also provides sufficient evidence that the combination of Avendano and Visser teaches limitation [1b], with sufficient rationale to combine the references. As Petitioner asserts, Visser discloses that different physical microphones may have different responses to speech, depending on locations, and the system uses ICA processing to generate cross filters to form a speech channel and a noise channel. Pet. 26; Ex. 1006, 8:16–18, 15:43–28, 17:29–44, Fig. 10. We determine that this provides sufficient teaching of the formation of a relationship of speech between different physical microphones. As to the rationale to combine, Petitioner explains that both Avendano and Visser are from the same field of endeavor, and one of ordinary skill in the art "would have been motivated to incorporate Visser's 'ICA process' into Avendano's system to further enhance the differences in speech content in Avendano's two processed signals, such that speech is detected with a greater degree of accuracy, 'even in a changing acoustic environment.'" *See* Pet. 14–21. Petitioner asserts, with supporting testimony from Dr. Kenny, that the combination of Avendano and Visser would have a reasonable expectation of success given the similarities of Avendano's DMA Module 302 and Visser's cross filters. *Id*. at 20–21 (citing Ex. 1003 ¶¶ 121–123).

At this juncture, we are not persuaded by Patent Owner's arguments concerning required feedback for Visser's w_{12} and w_{21} filters or that such

feedback undermines Petitioner's sufficient showing of a rationale to combine, and reasonable expectation of success of the combination. Although Patent Owner argues that Visser requires the use of a feedback loops, Patent Owner's argument does not appear to consider that the ICA process in Visser may use a finite impulse response filter "whose output signal is not feedback as input," that is, a feedback loop is not required. Ex. 1006, 17:51–57. Additionally, Petitioner appears to rely on the inclusion of the entire ICA process of Visser in Avendano (*see* Pet. 17, 25), which includes feedback loops. The parties may present additional briefing on these issues during trial.

At this juncture, Petitioner has presented sufficient evidence that the prior art teaches limitation [1b], as well as rationale for the combination of Avendano and Visser and a reasonable expectation of success of the combination.

iv. Limitation [1c]

Claim 1 recites "[1c] forming a second virtual microphone by applying the filter to the first signal to generate a first intermediate signal, and summing the first intermediate signal and the second signal." Ex. 1001, 37:1–4.

Petitioner contends that Avendano discloses limitation [1c] or, alternatively, that the combined disclosures in Avendano and Visser teach limitation [1c]. *See* Pet. 27–31. First, Petitioner contends that Avendano discloses a "first intermediate signal," namely, the "output of 'delay node 402,' which is generated by applying 'delay node 402' (*i.e.,* a filter) to the first signal." *Id.* at 27 (citing Ex. 1003 ¶¶ 145–152; Ex. 1005, 5:15–35, Figs. 4a–4b). Petitioner also contends that Avendano discloses "forming a

second virtual microphone" in the form of "'cardioid secondary signal (C_b),' which is formed by subtracting the first intermediate signal from the second signal." *Id.* at 27–28 (citing Ex. 1003 ¶¶ 145–152; Ex. 1005, 5:15–35, Figs. 4a–4b).

To support its contentions, Petitioner provides an annotated version of Avendano's Figure 4a as reproduced below (Pet. 28):

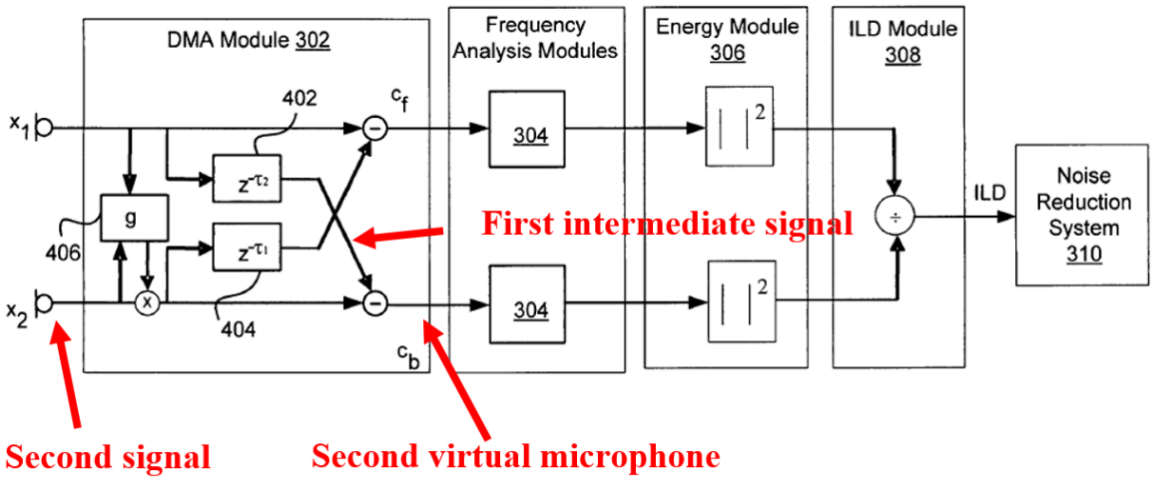

FIG. 4a

Figure 4a illustrates various modules in one implementation of audio processing engine 204 in audio device 104. Ex. 1005, 2:61–63, 5:15–17, 6:36–40, Fig. 4a.

Petitioner also contends that the combined disclosures in Avendano and Visser teach limitation [1c] because "it would have been obvious to incorporate Visser's 'ICA or BSS processing function' into Avendano's system to further enhance the separation between speech and noise." Pet. 30.

At this stage, Patent Owner presents no arguments specific to limitation [1c]. Nonetheless, the burden remains on Petitioner to demonstrate unpatentability. *See Dynamic Drinkware*, 800 F.3d at 1378.

We have reviewed the evidence and argument, and on this record, we preliminarily determine that Petitioner has presented sufficient evidence that the prior art teaches limitation [1c].

v. Limitation [1d]

Claim 1 recites "[1d] generating an energy ratio of energies of the first virtual microphone and the second virtual microphone." Ex. 1001, 37:5–6.

Petitioner contends that Avendano discloses limitation [1d] because Avendano's audio device 104 determines the following:

(1) the energy of the first virtual microphone E_f "by integrating the first virtual microphone over time" using the equation $E_f(t,\omega) = \int_{frame}|C_f(t',\omega)|^2dt'$;

(2) the energy of the second virtual microphone E_b "by integrating the second virtual microphone over time" using the equation $E_b(t,\omega) = \int_{frame}|C_b(t',\omega)|^2dt'$; and

(3) the energy ratio or Inter-Level Difference (ILD) "by dividing the energy of the first virtual microphone by the energy of the second virtual microphone."

Pet. 32 (citing Ex. 1003 ¶¶ 163–166; Ex. 1005, 5:49–6:5, 6:8–34).

At this stage, Patent Owner presents no arguments specific to limitation [1d]. Nonetheless, the burden remains on Petitioner to demonstrate unpatentability. *See Dynamic Drinkware*, 800 F.3d at 1378.

We have reviewed the evidence and argument, and on this record, we preliminarily determine that Petitioner has presented sufficient evidence that the prior art teaches limitation [1d].

vi. Limitation [1e]

Claim 1 recites "[1e] detecting acoustic voice activity of a speaker when the energy ratio is greater than a threshold value." Ex. 1001, 37:7–8.

Petitioner contends that Avendano discloses limitation [1e] because Avendano's audio device 104 "compares the energy ratio (ILD) to a 'threshold' to determine the presence or absence of speech." Pet. 33 (citing Ex. 1003 ¶¶ 167–171; Ex. 1005, 6:35–7:9). According to Petitioner, an energy ratio below the threshold results in setting the value λ_1 to zero "indicating an absence of speech," while an energy ratio above the threshold results in setting the value λ_1 to one "indicating a presence of speech." *Id.* (citing Ex. 1005, 6:58–7:3); *see id.* at 15 (citing Ex. 1005, 5:49–6:34, 6:58–7:3).

At this stage, Patent Owner presents no arguments specific to limitation [1e]. Nonetheless, the burden remains on Petitioner to demonstrate unpatentability. *See Dynamic Drinkware*, 800 F.3d at 1378.

We have reviewed the evidence and argument, and on this record, we preliminarily determine that Petitioner has presented sufficient evidence that the prior art teaches limitation [1e].

vi. Conclusion for Claim 1

Accordingly, we are persuaded that Petitioner has demonstrated a reasonable likelihood that it would prevail in showing that claim 1 would have been obvious over the combined teachings of Avendano and Visser.

b. Dependent Claim 7

Claim 7 depends from claim 5, which depends from claim 1, and additionally recites that the method "comprising applying a delay to the first intermediate signal." Ex. 1001, 37:24–25. Petitioner asserts that "Avendano's first intermediate signal is an output of 'delay node 402,' which is generated by applying 'delay node 402' (*i.e.*, a filter) to the first signal." Pet. 37. Petitioner contends that "in Avendano, a delay has been

applied to the first intermediate signal." *Id*. (citing Ex. 1003 ¶ 199). Similarly, Petitioner contends that in the combination of Avendano and Visser, "a delay also would have been applied to the first intermediate signal by Visser's cross filter w_{21}." *Id*. at 38 (citing Ex. 1003 ¶ 201).

In the assertions for limitation [1c] ("forming a second virtual microphone by applying the filter to the first signal to generate a first intermediate signal"), Petitioner argues that "[i]n Avendano, the first intermediate signal is an output of 'delay node 402,' which is generated by applying 'delay node 402.'" Pet. 27. For claim 7, Petitioner also relies on the application of delay node 402, however, the claim limitation requires that the delay be applied to the "first intermediate signal." Although the intermediate signal may be the output of the delay node, we do not discern that there is any disclosure that Petitioner relies upon that shows that there is a delay then applied to the intermediate signal. The same deficiency appears to apply to Petitioner's assertions for Visser. Accordingly, we preliminarily determine that Petitioner's showing for this claim is deficient. The parties may present additional briefing on issues related to claim 7 during trial.

c. Dependent Claims 2–6 and 25–28

Petitioner provides evidence and argument that claims 2–6 and 25–28 would have been obvious over Avendano and Visser. Pet. 33–37, 38–40.

At this stage, Patent Owner presents no arguments specific to these claims. Nonetheless, the burden remains on Petitioner to demonstrate unpatentability. *See Dynamic Drinkware*, 800 F.3d at 1378.

We have reviewed the evidence and argument, and on this record, we preliminarily determine that Petitioner has presented sufficient evidence that the prior art teaches the limitations of claims 2–6 and 25–28.

E. Alleged Obviousness of Claims 8–16, 23, and 24 Over Avendano, Visser, and Bisgaard

Petitioner contends that claims 8–16, 23, and 24 are unpatentable under § 103(a) as obvious over Avendano, Visser, and Bisgaard. *See* Pet. 1, 40–56.

We begin our discussion with a brief summary of Bisgaard, and then address the evidence and arguments presented.

1. Bisgaard (Ex. 1010)

Bisgaard is a U.S. patent application publication titled "Hearing Instrument with Adaptive Directional Signal Processing," filed on June 25, 2007, and published on May 5, 2011. Ex. 1010, codes (12), (22), (43), (54). Bisgaard states that the invention "relates to a hearing instrument, such as a hearing aid, an implantable hearing prosthesis, a head set, [or] a mobile phone," with "a signal processor for directional signal processing." *Id.* ¶ 2; *see id.* at code (57). "The signal processor may be adapted to perform directional signal processing selected from the group consisting of an adaptive beam former, a multi-channel Wiener filter, an independent component analysis, and a blind source separation algorithm." *Id.* ¶ 27.

Bisgaard explains that a "directional signal processing system combines the electrical signals from the microphones in the array into a signal with varying sensitivity to sound sources in different directions in relation to the array" that results in a "directivity pattern." Ex. 1010 ¶ 4. "Typically, a directivity pattern has at least one direction wherein the microphone signals substantially cancel each other" called a "null direction." *Id.* "A directivity pattern may comprise several null directions depending

on the number of microphones in the array and depending on the signal processing." *Id.*

Bisgaard's Figure 2 (reproduced below) is a circuit diagram depicting signal processing in a hearing instrument:

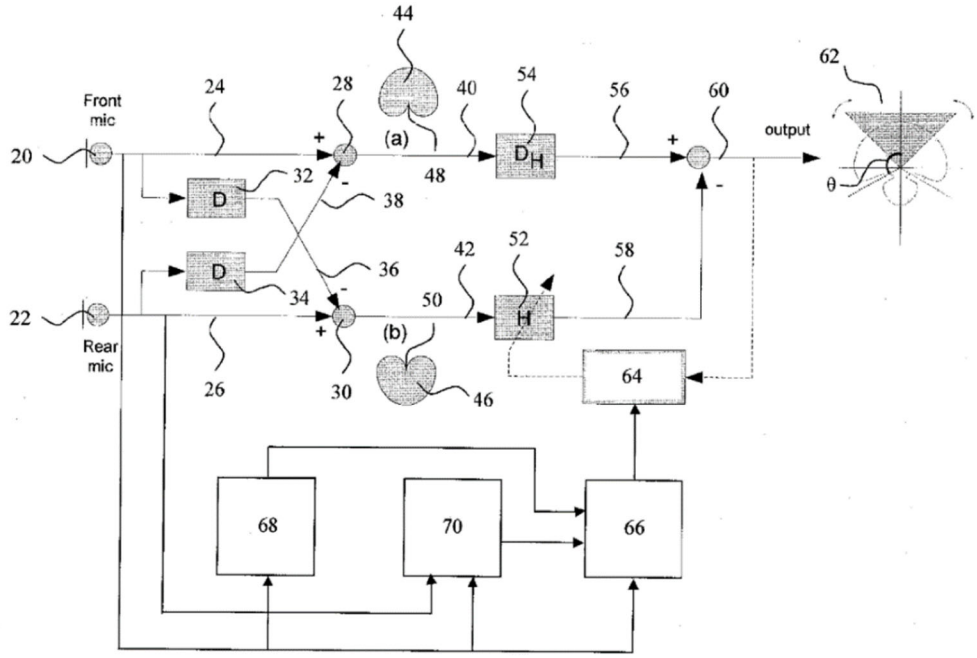

Figure 2 illustrates a hearing instrument including microphones 20 and 22 "positioned in a housing to be worn at the ear of the user." Ex. 1010 ¶ 39; *see id.* ¶ 31. "When the housing is mounted in its operating position at the ear of the user, one of the microphones, the front microphone 20, is positioned in front of the other microphone, the rear microphone 22." *Id.* ¶ 39. A "horizontal line extending through the front and rear microphones defines the front direction, i.e. azimuth=0°, corresponding to the looking direction of the user of the hearing instrument." *Id.*

2. Discussion

Petitioner provides evidence and argument that claims 8–16, 23, and 24 would have been obvious over Avendano, Visser, and Bisgaard. Pet. 40–56.

At this stage, Patent Owner presents no arguments specific to these claims. Nonetheless, the burden remains on Petitioner to demonstrate unpatentability. *See Dynamic Drinkware*, 800 F.3d at 1378.

We have reviewed the evidence and argument, and on this record, we preliminarily determine that Petitioner has presented sufficient evidence that the prior art teaches the limitations of claims 8–16, 23, and 24.

F. Alleged Obviousness of Claims 17–19 Over Avendano, Visser, Bisgaard, and Hou and Obviousness of Claims 20–22 Over Avendano, Visser, Bisgaard, Hou, and Frequency Art

Petitioner contends that claims 17–19 are unpatentable under § 103(a) as obvious over Avendano, Visser, Bisgaard, and Hou. *See* Pet. 1, 56–67. Petitioner also contends that claims 20–22 are unpatentable under § 103(a) as obvious over Avendano, Visser, Bisgaard, Hou, and either Byrne, Burnett, or Berglund ("Frequency Art"). *See* Pet. 1, 68–87.

Below, we provide a brief overview of Hou, and then we consider the obviousness issues. As explained below, there appear to be shortcomings in Petitioner's contentions regarding claim 17. Because claims 18, 19, and 20–22 depend directly or indirectly from claim 17, and because Petitioner's arguments and evidence do not cure the shortcomings as to claim 17, the showings as to claims 18, 19 and 20–22 also appear to be deficient.

1. Hou (Ex. 1008)

Hou is a U.S. patent titled "Adaptive Microphone Matching in Multi-Microphone Directional System," filed on March 14, 2001, and issued on December 26, 2006. Ex. 1008, codes (12), (22), (45), (54). Hou states that the invention "relates to multi-microphone sound pick-up systems" and "matching microphone sensitivity in multi-microphone sound pick-up systems." *Id.* at 1:22–25.

Hou explains that a "multi-microphone array can selectively enhance sounds coming from certain directions while suppressing interference coming from other directions." Ex. 1008, 1:30–32. To "achieve good directionality," however, the sensitivities of the microphones must match. *Id.* at 1:48–50; *see id.* at 1:67–2:2. "When the sensitivities of the microphones are not properly matched, then the directionality is substantially degraded and thus the ability to suppress interference coming from a particular direction is poor." *Id.* at 1:50–53; *see id.* at 1:53–62, Figs. 2(a)–2(d). The sensitivities of the microphones may not match due to manufacturing differences or "drift over time." *See id.* at 2:3–10, 2:35–37. "Hence, once matched microphones can become mismatched over time." *Id.* at 2:10–11.

Hou purports to address that problem by providing "improved approaches to matching sensitivities of microphones in multi-microphone directional processing systems." Ex. 1008, 2:44–46, 4:41–43, code (57); *see id.* at 2:38–40. Hou's approaches "adaptively match microphone sensitivities" by adaptively measuring "a sensitivity difference between microphones" and then compensating (or correcting) "an electronic sound signal from one or more of the microphones." *Id.* at 2:46–48, 4:43–44, 4:50–54, code (57). "As a result of the adaptive processing, the microphones 'effectively' become matched and remain matched over time and while in use." *Id.* at 4:54–56; *see id.* at 2:48–50, 4:45–47, code (57). Hou's approaches permit "multi-microphone directional processing systems to achieve superior directionality and consistent Signal-to-Noise Ratio (SNR) across all conditions." *Id.* at 4:57–60, 9:38–41. Accordingly, the

"directional noise suppression is robust." *Id.* at 2:48, 4:44–45, code (57); *see id.* at 9:29–38.

Hou's Figure 5 (reproduced below) is a block diagram depicting a two-microphone directional processing system:

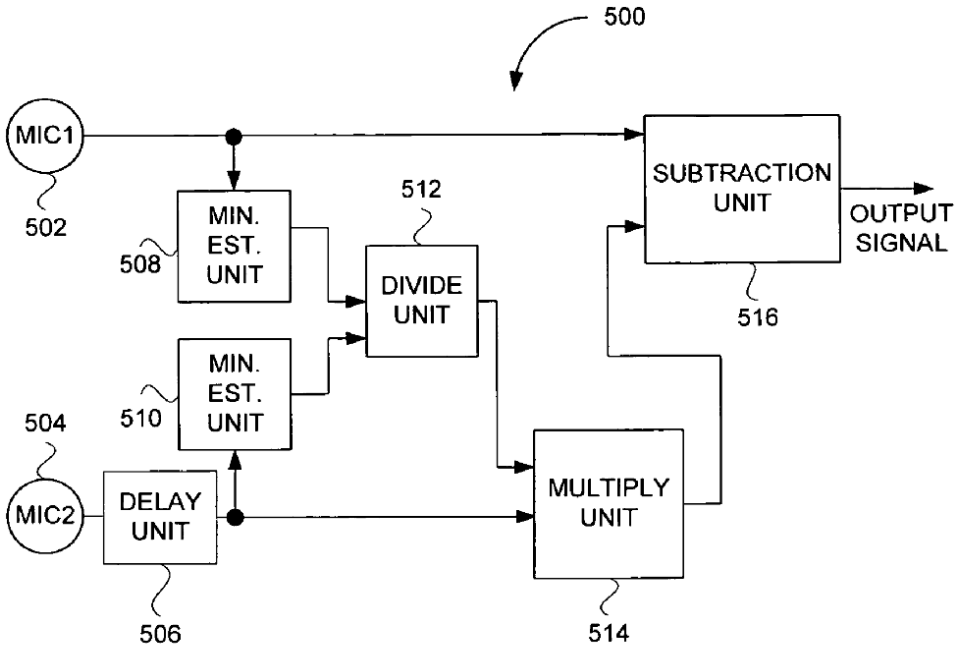

FIG. 5

Figure 5, above, illustrates two-microphone directional processing system 500. First minimum estimate unit 508 "estimates the minimum for the first electronic sound signal." Ex. 1008, 5:36–38. Second minimum estimate unit 510 "estimates the minimum of the second electronic sound signal." *Id.* at 5:38–39. "Typically, these minimums are measured over a time constant duration, such that the minimum is a relatively long-term minimum." *Id.* at 5:39–41.

Divide unit 512 "produces a quotient by dividing the first minimum estimate by the second minimum estimate." Ex. 1008, 5:42–43. The "quotient represents a scaling amount that is sent to" multiplication unit 514.

Id. at 5:43–45. "The second electronic sound signal is then multiplied with the scaling amount to produce a compensated sound signal." *Id.* at 5:45–47. "The compensated sound signal is thus compensated (or corrected) for the relative difference in sensitivity between the mismatched first and second microphones 502 and 504." *Id.* at 5:47–50.

Subtraction unit 516 "subtracts the compensated electronic sound signal from the first electronic sound signal to produce an output signal." Ex. 1008, 5:50–52, Fig. 5. Thus, "the output signal has been processed by the two-microphone directional processing system 500 to have robust directionality despite a mismatch between the first and second microphones 502 and 504." *Id.* at 5:52–56.

2. Discussion

a. Dependent Claim 17

Claim 17 recites:

> 17. The method of claim 13, wherein the forming of the filter comprises:
>
> generating a first quantity by applying a calibration to the second signal;
>
> generating a second quantity by applying the delay to the first signal;
>
> forming the filter as a ratio of the first quantity to the second quantity.

Ex. 1001, 37:54–61.

For "generating a first quantity" according to claim 17, Petitioner asserts that "Hou's 'first minimum estimate unit 508' would receive Avendano's second signal x_2 (*e.g.*, from Avendano's second physical microphone 108), and apply a calibration to the second signal x_2 (*e.g.*,

estimate a minimum of the second signal) to generate a first quantity." Pet. 63 (citing Ex. 1003 ¶¶ 295–299; Ex. 1008, 5:38–39, Fig. 5).

For "generating a second quantity" according to claim 17, Petitioner asserts that "Hou's 'delay unit 506' would receive Avendano's first signal x_1 (*e.g.*, from Avendano's first physical microphone 106), and apply a delay to that first signal x_1 to generate a second quantity." Pet. 64 (citing Ex. 1003 ¶ 298; Ex. 1008, 5:36–38, Fig. 5).

For "forming the filter" according to claim 17, Petitioner asserts that "Hou's 'divide unit 512' forms a filter as a ratio of the first quantity to the second quantity" because "divide unit 512 produces a quotient by dividing the first minimum estimate by the second minimum estimate." Pet. 65 (citing Ex. 1008, 5:42–45, Fig. 5).

To support its assertions, Petitioner provides an annotated version of Hou's Figure 5 as reproduced below (Pet. 64):

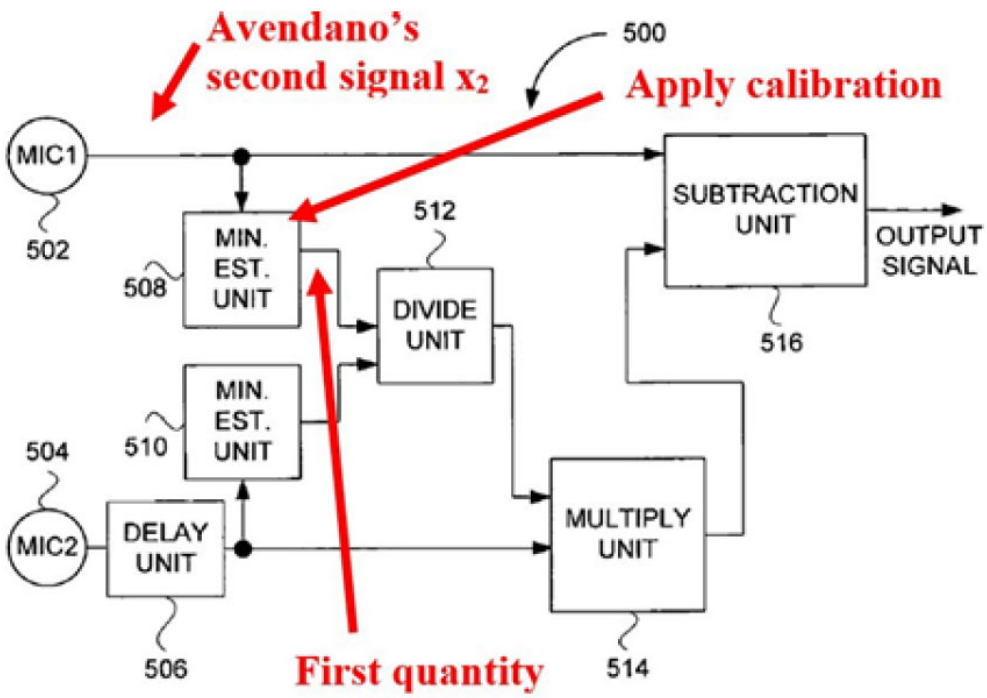

FIG. 5

Annotated Figure 5, above, illustrates two-microphone directional processing system 500 including multiple components. Ex. 1008, 4:17–19, 5:26–36, 5:43–45, 5:50–52, Fig. 5; *see* Ex. 1003 ¶ 83.

The claim limitations require that the "first quantity" be generated "by applying a calibration to the second signal." Petitioner asserts that "Hou's 'first minimum estimate unit 508' would receive Avendano's second signal x2 (e.g., from Avendano's second physical microphone 108), and *apply a calibration to the second signal* x_2 *(*e.g.*, estimate a minimum of the second signal)* to generate a first quantity." Pet. 63 (emphasis added). Petitioner's assertion appears to be that Hou's minimum estimate unit 508 serves to apply a calibration to a second signal. Hou's first minimum estimate unit 508, however, "estimates the minimum for the first electronic sound signal," and there is no indication that it performs calibration. *See*

Ex. 1008, 5:36–38. Petitioner also provides no explanation or support for its assertions for this limitation. *See* Pet. 63–66; Ex. 1003 ¶¶ 295–299. Accordingly, at this juncture, we preliminarily find that Petitioner's showing for claim 17 is deficient.

Claims 18, 19, and 20–22 depend directly or indirectly from claim 17, and Petitioner provides no additional argument and evidence as to the limitations of claim 17. Pet. 66–67, 74–87. Accordingly, we also preliminarily determine that the Petition is deficient for these claims.

V. CONCLUSION

Based on the arguments and evidence presented by the parties, we determine that there is a reasonable likelihood Petitioner would prevail with respect to at least one claim challenged in the Petition. Hence, we institute an *inter partes* review of all challenged claims on all challenges included in the Petition. *See SAS Inst. Inc. v. Iancu*, 138 S. Ct. 1348, 1355 (2018) (noting that the language of 35 U.S.C. § 314(b) "indicates a binary choice—either institute review or don't"); *see also PGS Geophysical AS v. Iancu*, 891 F.3d 1354, 1360 (Fed. Cir. 2018) (interpreting the statute as requiring "a simple yes-or-no institution choice respecting a petition, embracing all challenges included in the petition").

VI. ORDER

Accordingly, it is

ORDERED that, pursuant to 35 U.S.C. § 314(a), an *inter partes* review of claims 1–28 in the '611 patent is instituted on all challenges included in the Petition;

ORDERED that Petitioner's Motion for Joinder (Paper 3) is dismissed as moot; and

FURTHER ORDERED that, according to 35 U.S.C. § 314(c) and 37 C.F.R. § 42.4, notice is hereby given of the institution of a trial that commences on the entry date of this Decision.

For PETITIONER:

Gregory S. Gewirtz
Russell W. Faegenburg
Orville Cockings
LERNER DAVID LLP
ggewirtz.ipr@ldlkm.com
rfaegenburg@lernerdavid.com
ocockings@lernerdavid.com

For PATENT OWNER:

Peter Lambrianakos
Vincent J. Rubino, III
Enrique W. Iturralde
Richard Cowell
Jacob Ostling
FABRICANT LLP
plambrianakos@fabricantllp.com
vrubino@fabricantllp.com
eiturralde@fabricantllp.com
rcowell@fabricantllp.com
jostling@fabricantllp.com