US007773041B2

(12) **United States Patent**
Wang

(10) **Patent No.: US 7,773,041 B2**
(45) **Date of Patent: Aug. 10, 2010**

(54) **ANTENNA SYSTEM**

(75) Inventor: **Shu-Li Wang**, Santa Clara, CA (US)

(73) Assignee: **Apple Inc.**, Cupertino, CA (US)

(*) Notice: Subject to any disclaimer, the term of this patent is extended or adjusted under 35 U.S.C. 154(b) by 827 days.

(21) Appl. No.: **11/486,223**

(22) Filed: **Jul. 12, 2006**

(65) **Prior Publication Data**

US 2008/0012774 A1 Jan. 17, 2008

(51) **Int. Cl.**
H01Q 11/12 (2006.01)

(52) **U.S. Cl.** **343/741**; 343/702; 343/866

(58) **Field of Classification Search** 343/702, 343/741, 742, 866
See application file for complete search history.

(56) **References Cited**

U.S. PATENT DOCUMENTS

4,445,123 A 4/1984 Wright
5,113,196 A * 5/1992 Ponce de Leon et al. 343/744
5,227,805 A * 7/1993 King et al. 343/702
5,469,178 A * 11/1995 Nguyen et al. 343/702
6,121,935 A 9/2000 Reece et al.
6,400,321 B1 6/2002 Fenwick et al.
6,603,430 B1 8/2003 Hill et al.
6,697,025 B2 2/2004 Koyanagi et al.
6,812,902 B2 11/2004 Rossman et al.
6,867,738 B2 3/2005 Birnbaum et al.
6,909,401 B2 * 6/2005 Rutfors et al. 343/702
6,924,773 B1 8/2005 Paratte

OTHER PUBLICATIONS

H. Nakano et al., "Low-Profile Inverted-F Antenna with Parasitic Elements on an Infinite Ground Plane", IEE Proceedings online No. 19982067, IEE Proc.-Microw. Antennas Propag., vol. 145, No. 4, Aug. 1998, pp. 321-325.
Constantine A. Balanis, "Linear Elements Near or on Infinite Perfect Conductors", Antenna Theory, Third Edition, Copyright 2005, Published by John Wiley & Sons, Hoboken, New Jersey, pp. 184-187, complete reference total p. 12.
Hishashi Morishita et al., "A Balance-Fed Loop Antenna System for Handset", Paper: Special Section on Multi-Dimensional Mobile Information Networks, IEICE Trans. Fundamentals, vol. E82-A, No. 7, Jul. 1999, pp. 1138-1143.

* cited by examiner

Primary Examiner—Tan Ho

(57) **ABSTRACT**

An antenna system includes a dielectrically-loaded loop element electromagnetically coupled to a planar element. The antenna system exhibits uniform, broadband radiation and reception patterns.

12 Claims, 12 Drawing Sheets

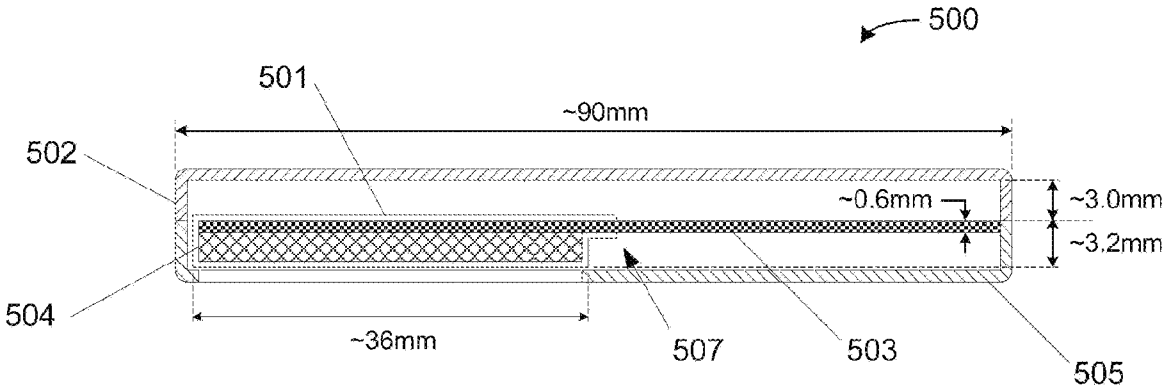

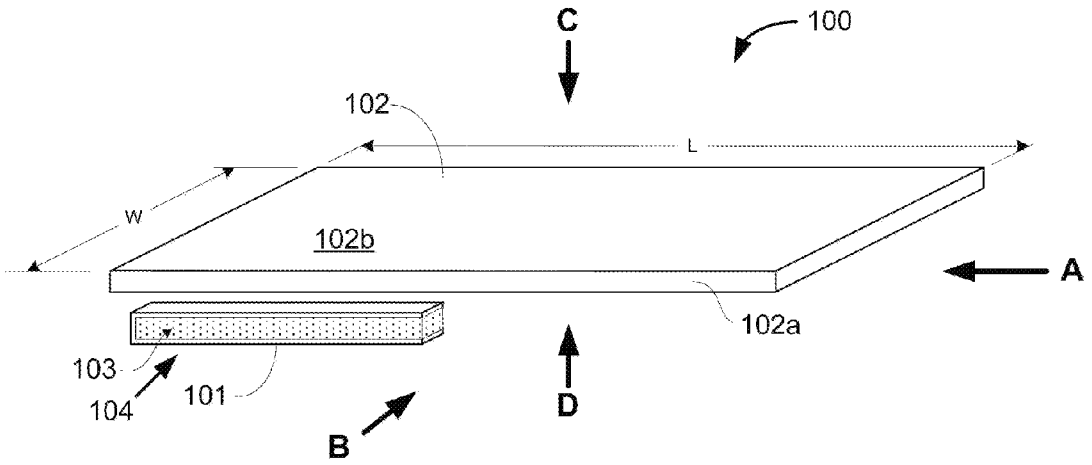

Figure 1A

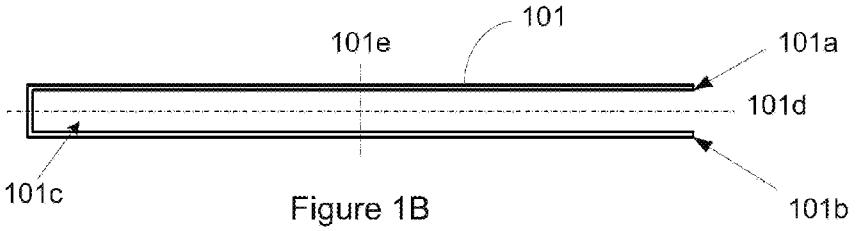

Figure 1B

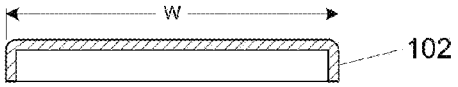

Figure 1C

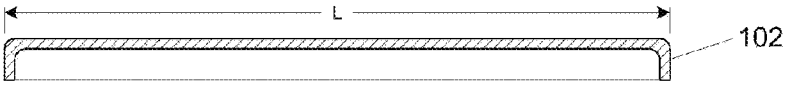

Figure 1D

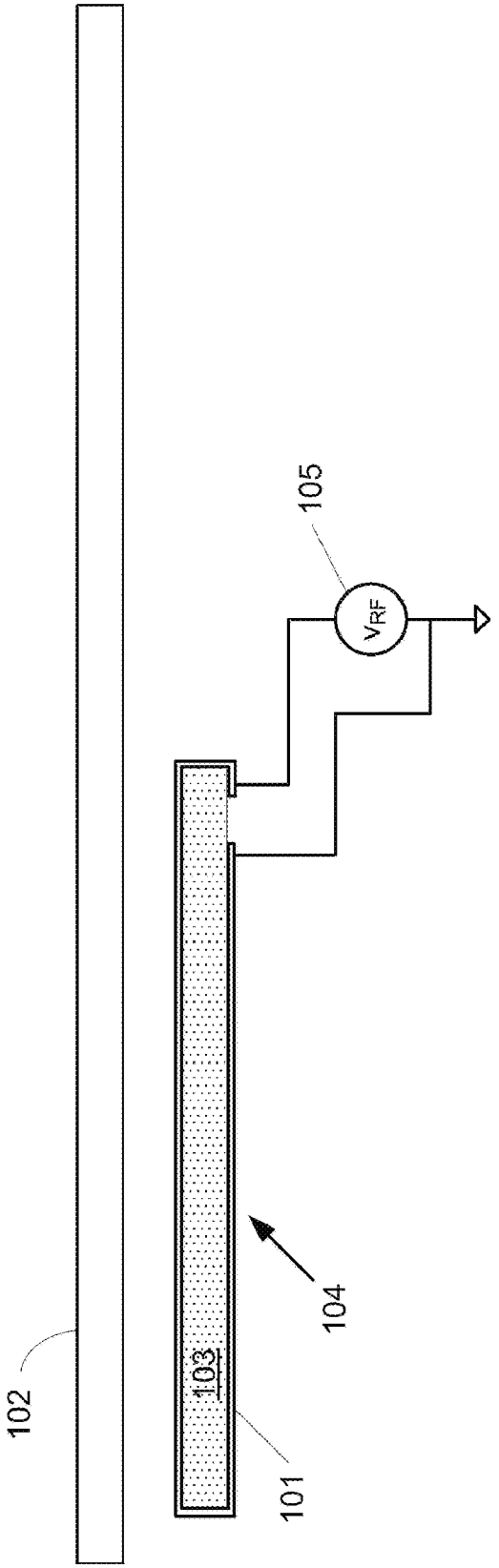

Figure 2

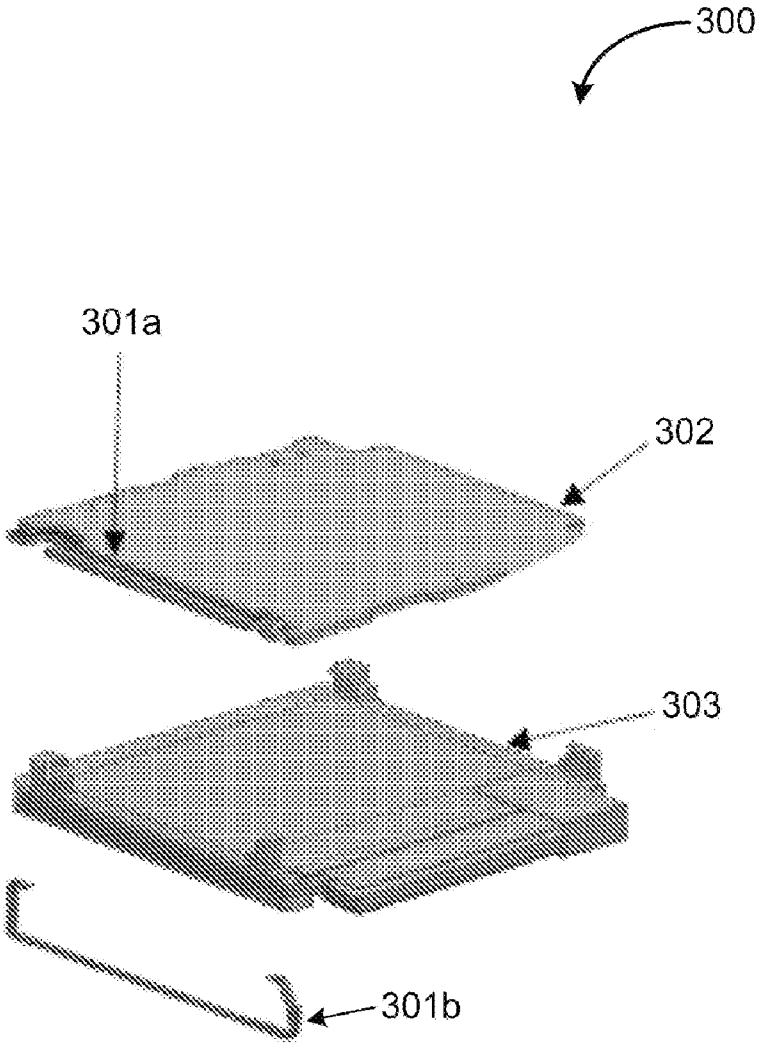

Figure 3

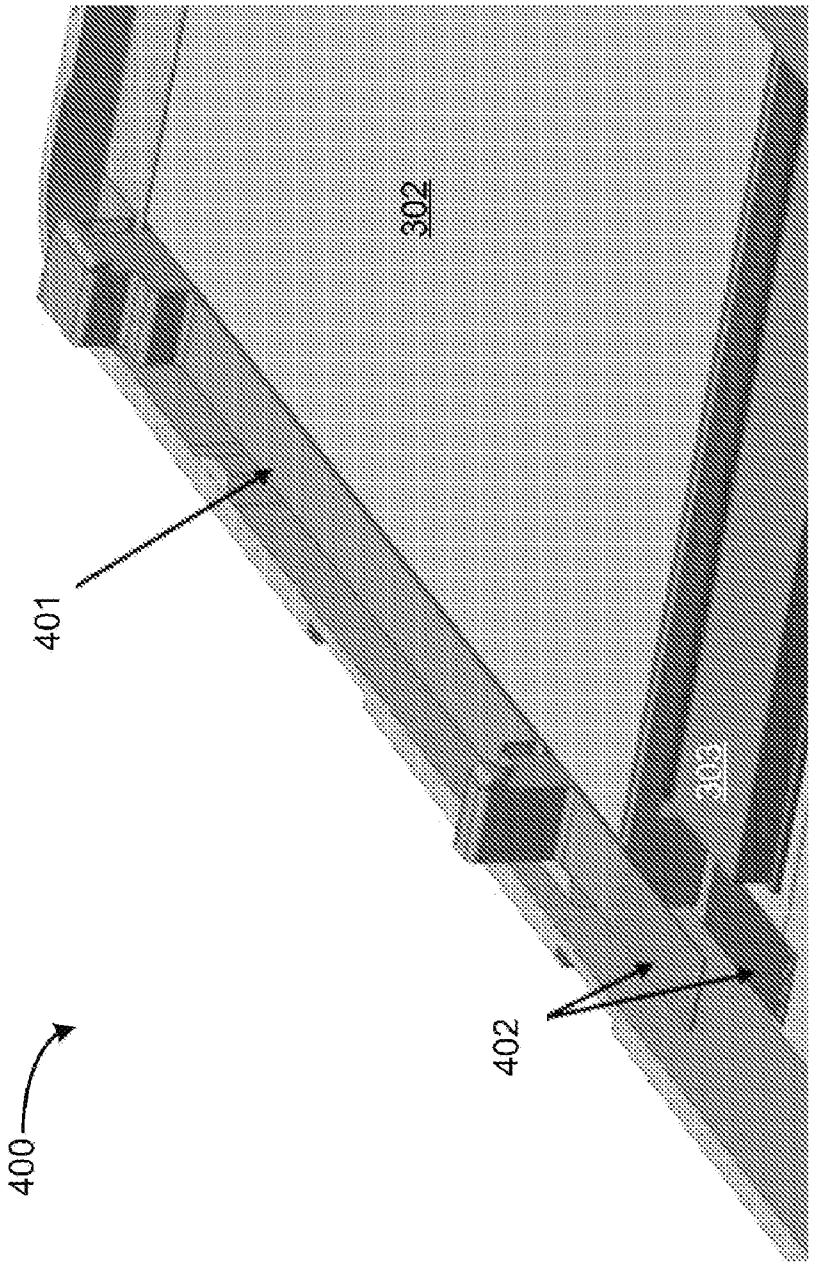

Figure 4

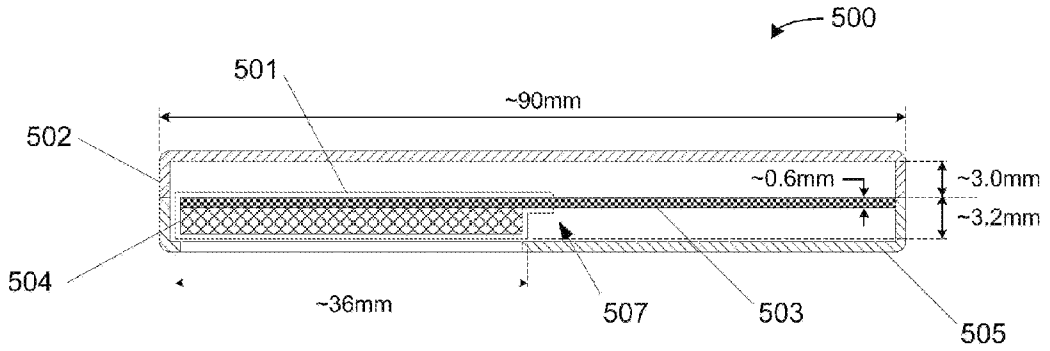

Figure 5

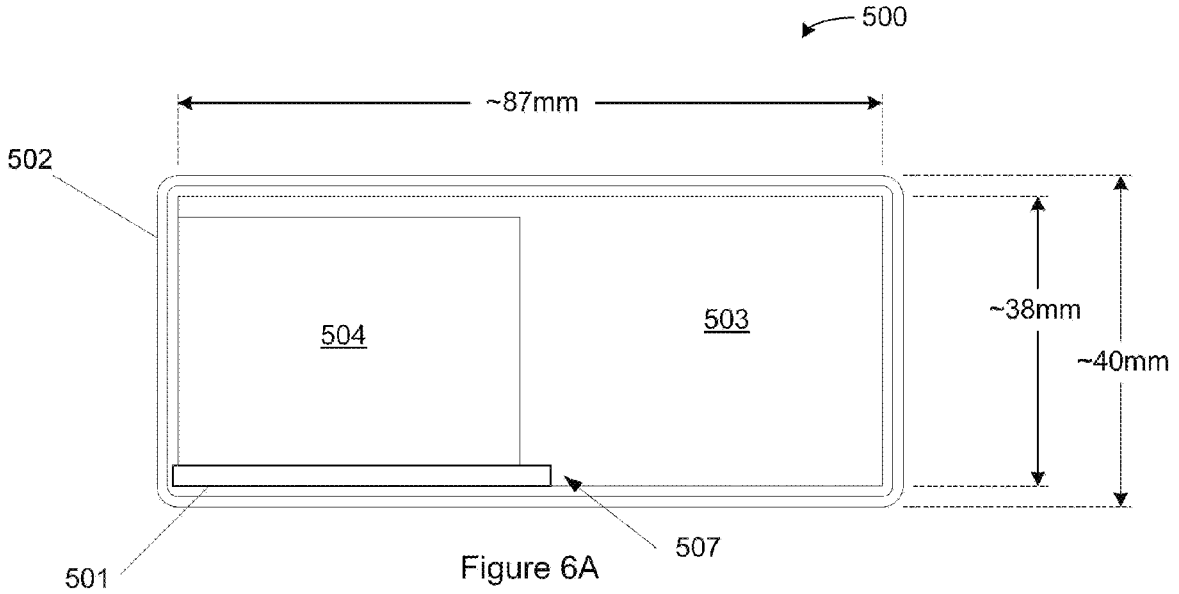

Figure 6A

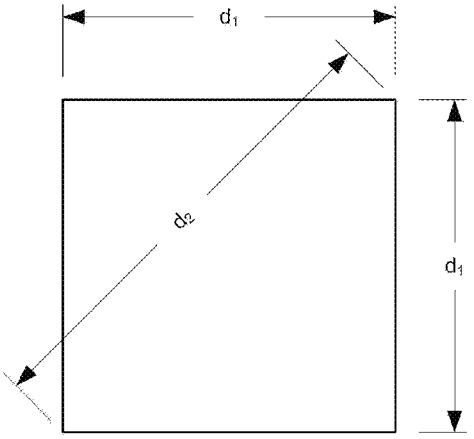

Figure 6B

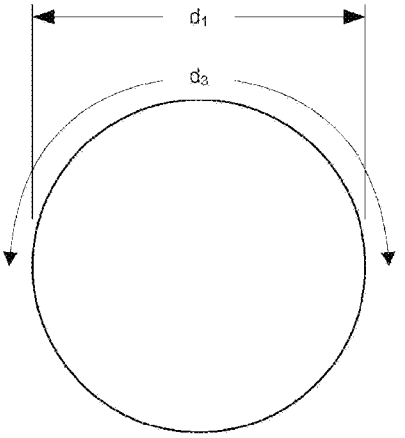

Figure 6C

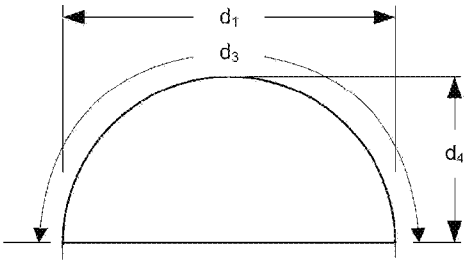

Figure 6E

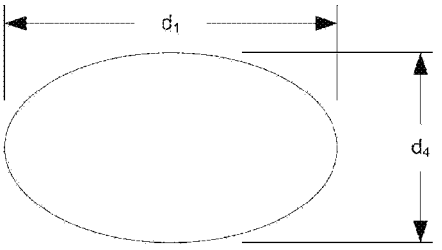

Figure 6D

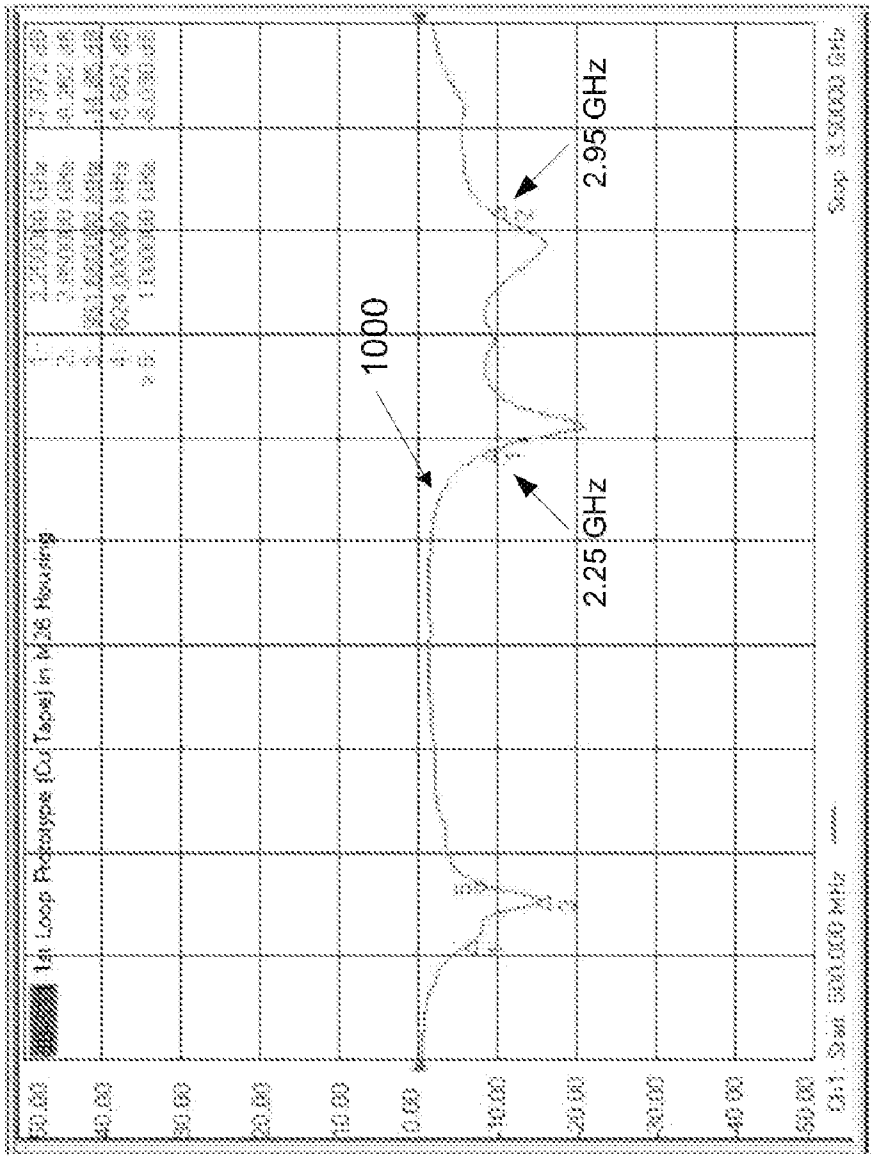

Figure 7

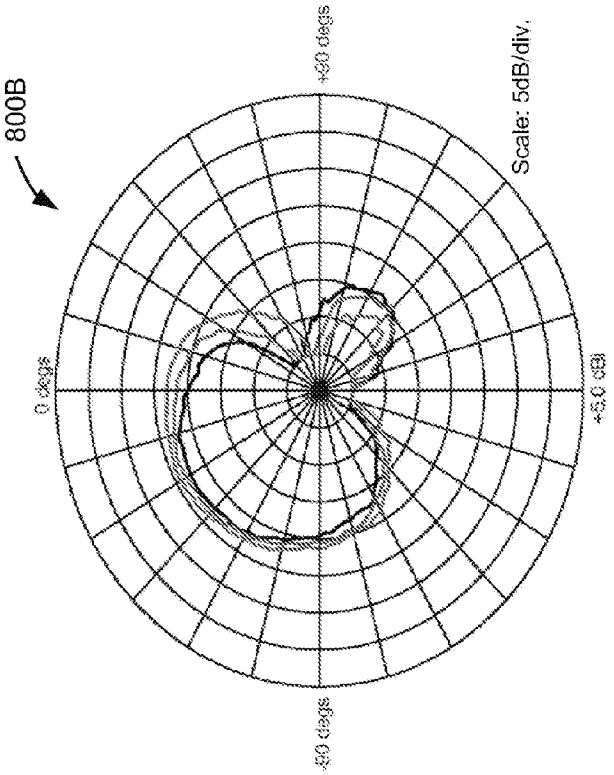

Figure 8B

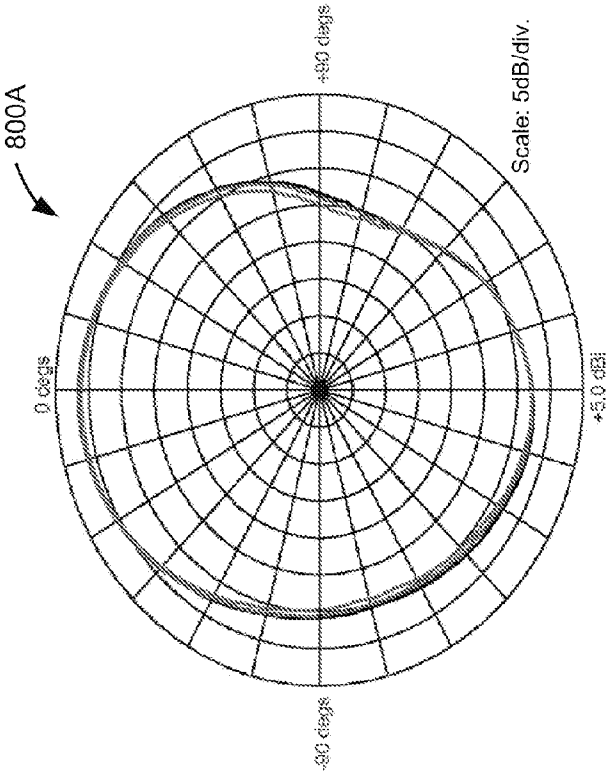

Figure 8A

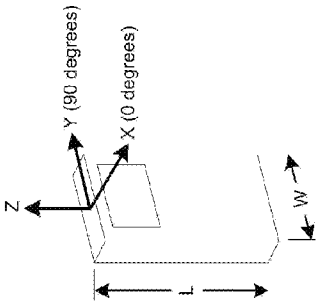

Figure 9

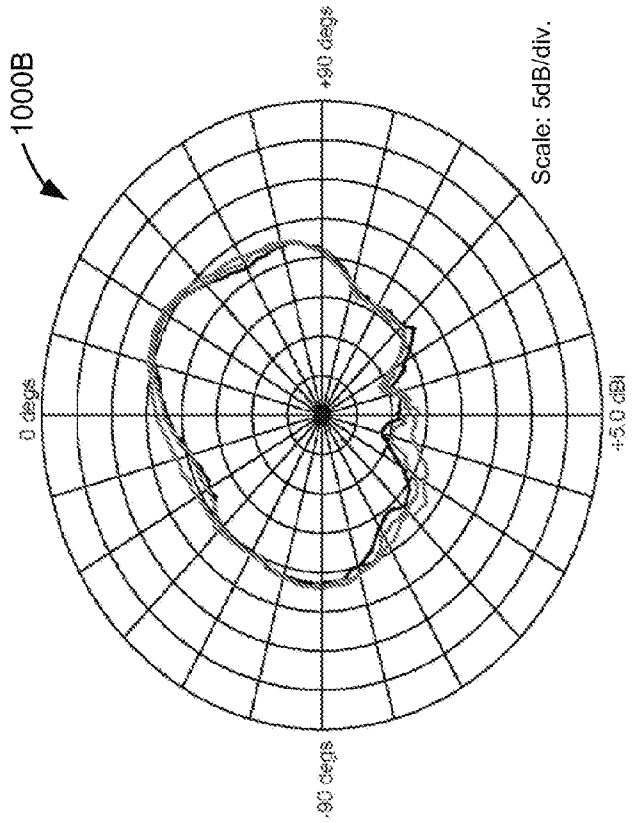

Figure 10B

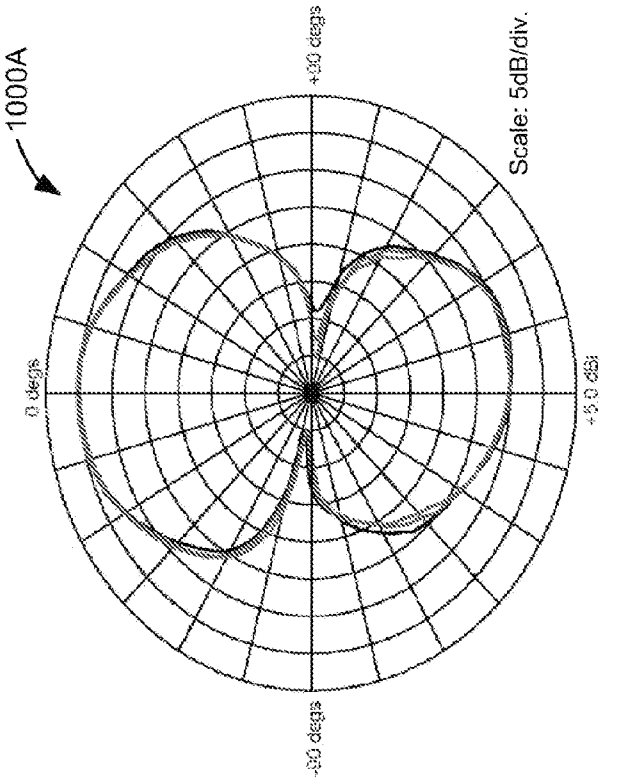

Figure 10A

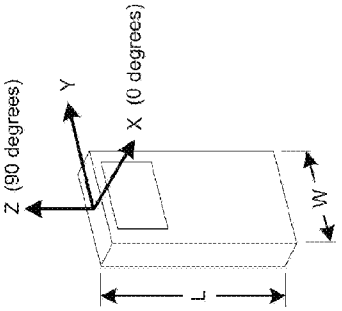

Figure 11

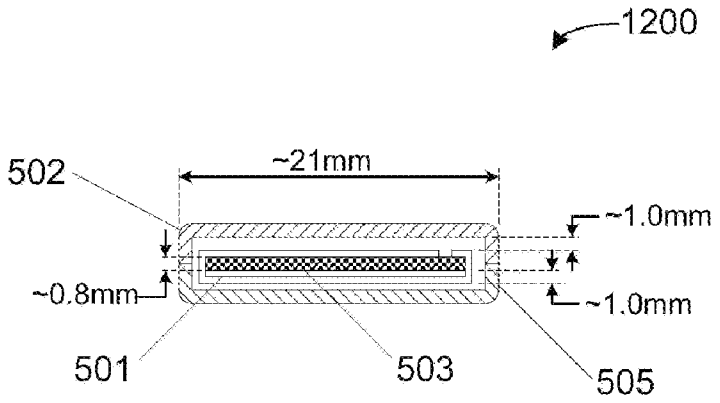

Figure 12

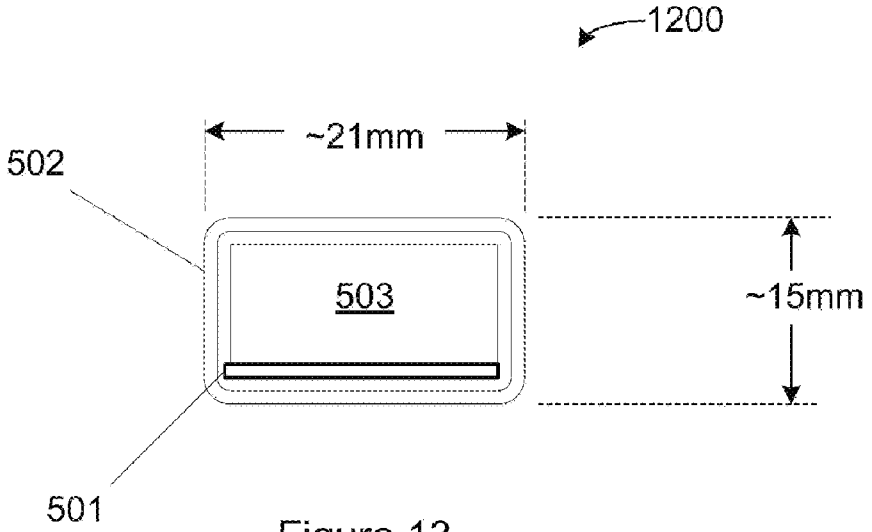

Figure 13

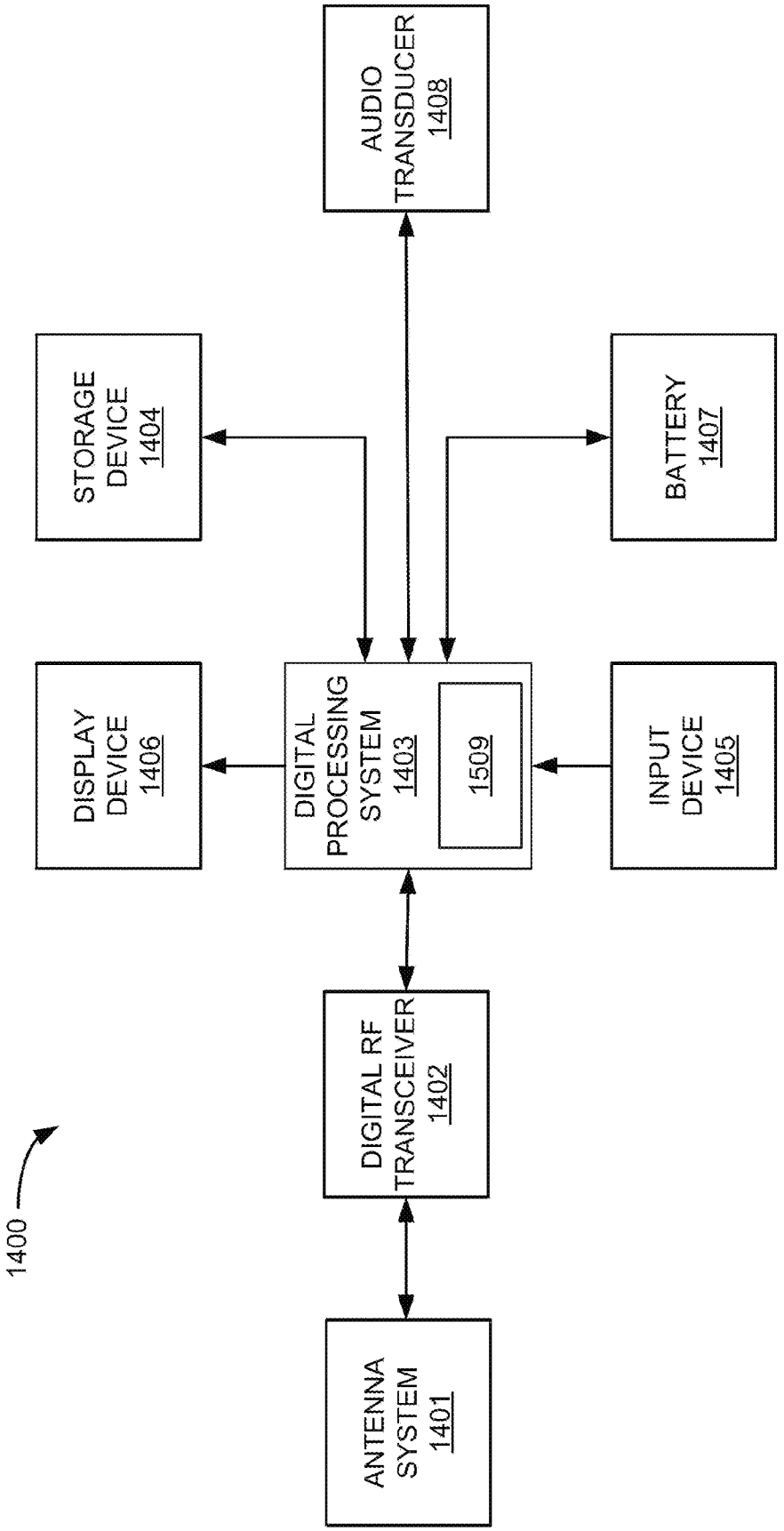
1400
ANTENNA SYSTEM 1401
DIGITAL RF TRANSCEIVER 1402
DISPLAY DEVICE 1406
DIGITAL PROCESSING SYSTEM 1403
1509
INPUT DEVICE 1405
STORAGE DEVICE 1404
AUDIO TRANSDUCER 1408
BATTERY 1407

Figure 14

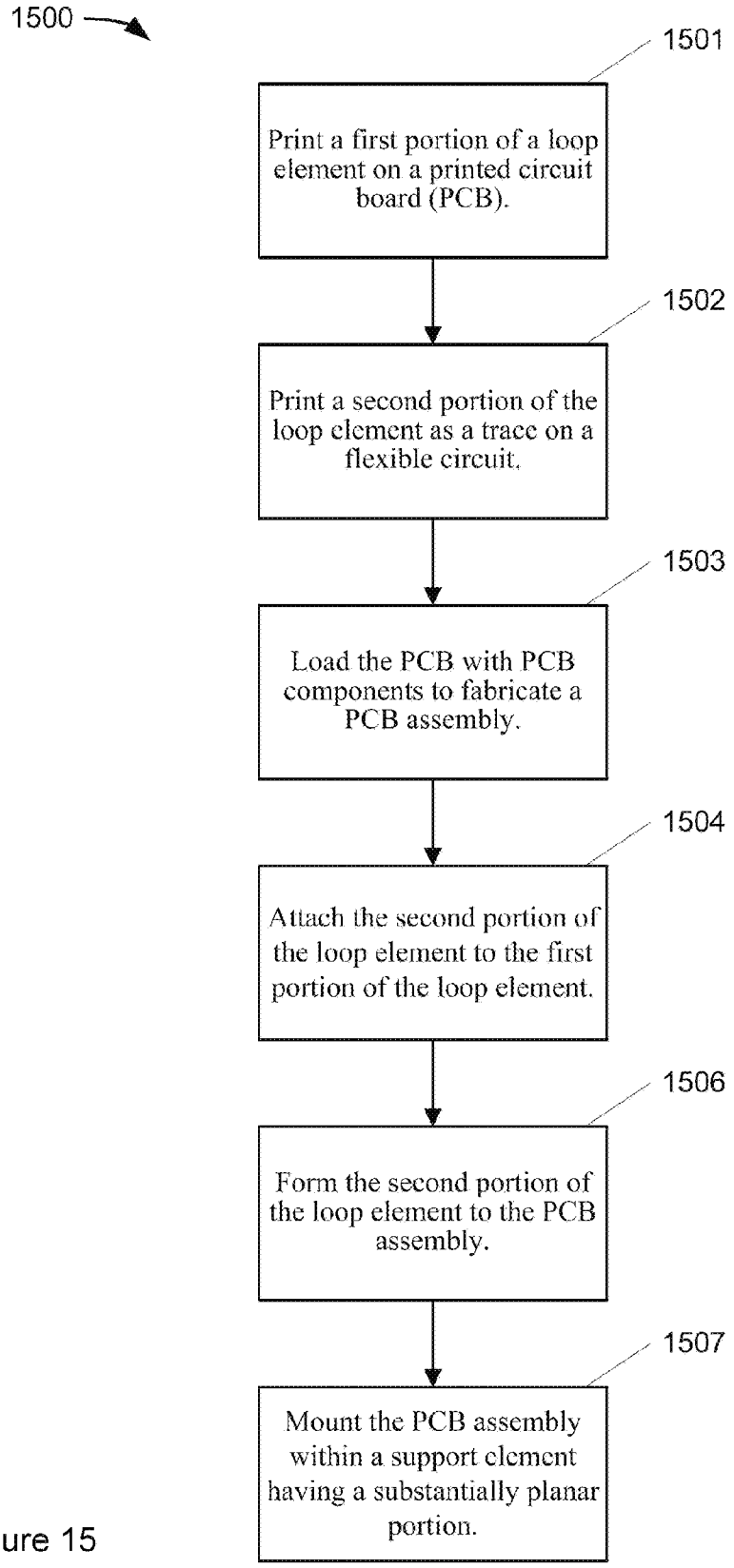
1500
1501
Print a first portion of a loop element on a printed circuit board (PCB).
1502
Print a second portion of the loop element as a trace on a flexible circuit.
1503
Load the PCB with PCB components to fabricate a PCB assembly.
1504
Attach the second portion of the loop element to the first portion of the loop element.
1506
Form the second portion of the loop element to the PCB assembly.
1507
Mount the PCB assembly within a support element having a substantially planar portion.

Figure 15

ANTENNA SYSTEM

FIELD OF THE INVENTION

The invention relates to antenna systems and, in particular, to antenna systems for wireless communication devices.

BACKGROUND OF THE INVENTION

Advances in semiconductor technology have allowed wireless communication devices, such as cell phones, personal digital assistants (PDA's) and pagers, to become smaller and smaller. However, the antenna systems for these devices have not evolved at the same pace because antenna efficiency generally decreases with reductions in antenna size. To maintain reasonable gain and non-directional receive/transmit patterns, most conventional antenna designs have relied on external monopole antennas, either fixed or telescoping. Other designs have realized internal antennas of different varieties (e.g., monopole, dipole, helical and patch antennas). However, these antennas are susceptible to performance degradation due to the proximity of other components. For example, coupling to the electric fields of internal components (e.g. oscillators, amplifiers, mixers) can degrade the signal-to-noise ratio of the receiving section of the wireless device, and internal ground planes and metallic enclosures can distort antennas patterns or completely block transmission and reception in some directions. Therefore, in order to obtain reasonable antenna performance, these internal antennas are normally kept away from other components in the wireless device by placing them in separate areas, adding size and volume to the wireless devices.

SUMMARY OF THE DESCRIPTION

Various embodiments of an antenna system are described. In one exemplary embodiment, an antenna system includes a dielectrically-loaded loop element and a substantially planar element. The substantially planar element is disposed substantially parallel to a major axis of the dielectrically-loaded loop element, substantially perpendicular to a minor axis of the dielectrically-loaded loop element and within an induction field region of the dielectrically-loaded loop element. Features and benefits of the various embodiments of the invention will be apparent from the description.

At least certain embodiments of the present invention include a portable device having an antenna structure therein, the antenna structure including a generally U-shaped loop element coupled with a support element having a substantially planar portion, wherein the substantially planar portion has an electrical length along a first dimension proximate to one wavelength of a frequency of interest, and an electrical length along a second dimension proximate to one-half wavelength of the frequency of interest, where the support element is located within an induction field of the loop element.

At least certain embodiments of the present invention include an embodiment of the antenna system as part of a digital media player, such as a portable music and/or video media player, which includes a media processing system to present the media, a storage device to store the media and a radio frequency (RF) transceiver to couple the antenna system to the media processing system. The RF transceiver uses the antenna system to transmit or receive the media, which may be one or more of music, still pictures or motion pictures, for example. The portable media player may include a media selection device, such as a click wheel device, a touchpad, pushbuttons or other similar selection devices as are known in

the art. The media selection device may be used to select the media stored on the storage device. The portable media player may, at least in certain embodiments, include a display device, such as an LCD display, coupled to the media processing system to display titles or other indicators of media selected with the input device and presented, through a speaker and/or earphones or on the display device or on both the display and a speaker and/or earphones. In certain embodiments, the display device may also be the media selection device such as, for example, an LCD touch screen device.

At least certain embodiments of the present inventions include an embodiment of the antenna system as part of a wireless device such as a cellular telephone, smart phone or personal digital assistant, for example, which includes a digital radio frequency (RF) transceiver. The digital RF transceiver uses the antenna system to send and receive digital voice and/or data signals. The wireless device may include a digital processing system coupled to the transceiver to control the transceiver and manage the digital signals. The digital processing system may be coupled to a storage device to store data, to a display device such as an LCD display to display data and/or receive user input (e.g., via touch screen sensors), to an input device such as a keypad, and to audio transducers (e.g., microphone and/or speaker) with associated analog/digital converters and device drivers.

DESCRIPTION OF THE DRAWINGS

Embodiments of the present invention are illustrated by way of example and not limitation in the figures of the accompanying drawings in which like references indicate similar elements.

FIG. **1**A illustrates an antenna system in one embodiment;

FIG. **1**B illustrates a loop element of an antenna assembly in one embodiment;

FIG. **1**C illustrates a cross-section of a planar antenna element in one embodiment;

FIG. **1**D illustrates another cross-section of a planar antenna element in one embodiment;

FIG. **2** illustrates a plane view of the antenna system embodiment of FIG. **1**A;

FIG. **3** is an exploded view illustrating a dielectrically-loaded loop element on one embodiment;

FIG. **4** is a partially assembled antenna system illustrating a dielectrically-load loop element in one embodiment;

FIG. **5** is a cross-sectional view illustrating an antenna system in a wireless communications device in one embodiment;

FIG. **6**A is a plane view of the embodiment of FIG. **5**;

FIGS. **6**B through **6**E illustrate alternative embodiments of the invention;

FIG. **7** is a graph illustrating an exemplary return loss of an antenna system in one embodiment;

FIG. **8**A is a gain plot illustrating a horizontally polarized azimuth radiation pattern of an antenna system in one embodiment;

FIG. **8**B is a gain plot illustrating a vertically polarized azimuth radiation pattern of an antenna system in one embodiment;

FIG. **9** illustrates an orientation of a wireless communications device for the azimuth (X-Y plane) radiation patterns of FIGS. **8**A and **8**B;

FIG. **10**A is a gain plot illustrating a vertically polarized elevation radiation pattern of an antenna system in one embodiment;

FIG. **10**B is a gain plot illustrating a horizontally polarized elevation radiation pattern of an antenna system in one embodiment;

FIG. **11** illustrates an orientation of a wireless communications device for the elevation (X-Z plane) radiation patterns of FIGS. **10**A and **10**B;

FIG. **12** is a cross-sectional view illustrating another embodiment of an antenna system in a wireless communications device;

FIG. **13** is a plane view of the embodiment of FIG. **12**;

FIG. **14** is a block diagram illustrating a system in which embodiments of the invention may be implemented; and

FIG. **15** is a flowchart illustrating a method of manufacture in one embodiment.

DETAILED DESCRIPTION

Various embodiments and aspects of the invention will be described with reference to details discussed below, and the accompanying drawings will illustrate the various embodiments. The following description and drawings are illustrative of the invention and are not to be construed as limiting the invention. Numerous specific details such as dimensions and frequencies are described to provide a thorough understanding of various embodiments of the present invention. However, in certain instances, well-known or conventional details are not described in order to not unnecessarily obscure the embodiments of the present invention.

At least certain embodiments of the present invention include a portable device having an antenna structure therein, the antenna structure including a generally U-shaped loop element coupled with a support element having a substantially planar portion, wherein the substantially planar portion has an electrical length along a first dimension proximate to one wavelength of a frequency of interest, and an electrical length along a second dimension proximate to one-half wavelength of the frequency of interest, where the support element is located within an induction field of the loop element.

At least certain embodiments of the antenna system described herein may be part of a digital media player, such as a portable music and/or video media player, which includes a media processing system to present the media, a storage device to store the media and a radio frequency (RF) transceiver coupled with the antenna system and the media processing system. In certain embodiments, media stored on a remote storage device may be transmitted to the media player. The media player may receive the transmitted media via the antenna system and RF transceiver, and may store and/or stream the media. In other embodiments, the media player may transmit the media to a remote storage device and/or another media player. The media may be, for example, one or more of music or other audio, still pictures, or motion pictures. The portable media player may include a media selection device, such as a click wheel device on an iPod® or iPod Nano® media player from Apple Computer, Inc. of Cupertino, Calif., a touch screen device, pushbutton device, movable pointing device or other selection device. The media selection device may be used to select the media stored on the storage device and/or the remote storage device. The portable media player may, in at least certain embodiments, include a display device which is coupled to the media processing system to display titles or other indicators of media being selected through the input device and being presented, either through a speaker or earphone(s), or on the display device, or on both the display device and a speaker or earphone(s). In certain embodiments, the display device may also be the media selection device (e.g., a touch screen display device). Examples of a portable media player are described in published U.S. patent applications 2003/0095096 and 2004/0224638, both of which are incorporated herein by reference.

FIG. **1**A illustrates an antenna system **100** according to one embodiment of the invention. In FIG. **1**A, a generally U-shaped dielectrically-loaded loop element **104** includes a loop element **101** loaded with a dielectric material **103**. Dielectrically-loaded loop element **104** is located in proximity to an element with a substantially planar portion **102** (referred to as "planar element" hereinafter for convenience), having a substantially rectangular footprint. As illustrated in FIG. **1**B, the loop element **101** has terminals **101***a* and **101***b* (driven end of the loop), an aperture **101***c*, a major axis **101***d* and a minor axis **101***e*. Loop element **101** may be, for example, a metallic ribbon or tape, as illustrated in FIG. **1**A. Alternatively, loop element **101** may be a wire element, a printed circuit element or any combination thereof. Dielectric material **103** may be any low loss dielectric material such as epoxy-fiberglass printed-circuit board material, poly-tetrafluoroethylene (PTFE) fiberglass or the like. Dielectrically-loaded loop element **104** may have a total electrical length between approximately one-half wavelength and one wavelength at a center frequency of the antenna system.

Planar element **102** may have a width W and a length L. As illustrated in FIGS. **1**C and **1**D, the "planar element" **102** may have a shape more complex than a simple plane. For example, planar element **102** may have a flanged edge or a curved portion and/or section in addition to a planar portion, and may still be considered substantially planar. For example, planar element **102** may be part of a case assembly (e.g., a backplate) of a wireless communications device (e.g., a cellular phone, smart phone, PDA and the like) or a media player. Planar element **102** may be, for example, a metal-plated insulator or dielectric material such as molded plastic or the like. Alternatively, planar element **102** may be a fabricated, cast or formed piece of metal. In one embodiment, as illustrated in FIG. **1**A, a face **102***b* of planar element **102** may be disposed substantially parallel to the major axis **101***d* of the aperture **101***c*, and substantially perpendicular the minor axis **101***e* of loop element **101**. In one embodiment, the major axis **101***d* of loop element **101** may be disposed substantially parallel to an edge **102***a* of the planar element **102**. In other embodiments, the dielectrically-loaded loop element **104** may be located at any location and at any orientation with respect to the planar element **102**, provided that minor axis **101***e* is substantially perpendicular to planar element **102** and major axis **101***d* is substantially parallel to planar element **102**. The distance between dielectrically-loaded loop element **104** and planar element **102** may be adjusted to tune the input impedance of dielectrically-loaded loop element **104**. In one embodiment, dielectrically-loaded loop element **104** may be separated from planar element **102** by less than or equal to one-fortieth of a free-space wavelength at an operating frequency of the antenna system **100**.

FIG. **2** illustrates a plane view of antenna system **100** in one embodiment. In FIG. **2**, dielectrically-loaded loop element **104** is formed by wrapping loop element **101** around the dielectric material **103** such that the terminals **101***a* and **101***b* of loop element **101** are co-planar on one surface of dielectric material **103**. The terminals **101***a* and **101***b* may be driven by an RF (radio frequency) voltage source, illustrated schematically as RF voltage source **105**. In one embodiment illustrated, dielectric material **103** may be a printed circuit board (PCB) assembly and RF voltage source **105** may be a PCB-mounted RF voltage source.

In one embodiment, as illustrated in FIG. **3**, a dielectrically-loaded loop element, such as dielectrically-loaded loop

element **101**, may be integrated into the assembly of an electronic device such as a communications device or media player, for example, such that planar element **102** serves as a physical support element for dielectrically-loaded loop element **101**. FIG. **3** is an exploded view **300** of an exemplary assembly of a printed circuit board (PCB) and an LCD display. In FIG. **3**, a first section of a dielectrically-loaded loop element may be embodied as a printed trace **301***a* on a PCB **302**. A second section of a dielectrically-loaded loop element may be embodied as a printed trace on a flexible circuit **301***b*. PCB **302** may then be loaded with PCB mounted components such as LCD display **303**, and the second section of the dielectrically-loaded loop element **301***b* may be formed around the PCB/LCD assembly and may be soldered or otherwise bonded with section **301***a* to form the loop element, wherein the loop element is integrated with the PCB assembly. The trace on the flex circuit may have a gap in an appropriate location (not shown) to provide terminal connections for the driven end of the loop as described above. The PCB assembly may then be mounted within the planar element **102** as illustrated in FIG. **5** and described below.

FIG. **15** is a flowchart illustrating a method **1500** for manufacturing the antenna system described herein in one embodiment. In operation **1501**, a first portion of a loop element is printed on a printed circuit board (PCB). In operation **1502**, a second portion of the loop element is printed as a trace on a flexible circuit. In operation **1503**, the PCB is loaded with PCB components to fabricate a PCB assembly. In operation **1504**, the second portion of the loop element is attached to the first portion of the loop element. In operation **1505**, the second portion of the loop is formed to the PCB assembly, wherein the loop element is formed and integrated with the PCB assembly. In operation **1506**, the PCB assembly is mounted within a support element having a substantially planar portion.

FIG. **4** illustrates an alternative embodiment **400** of a dielectrically-loaded loop element. In FIG. **4**, a single long piece of flex circuit **401** may be wrapped around and conformed to PCB **302** and/or LCD **303**, with loop terminals **402** exposed as the driven end of the loop. A dielectrically-loaded loop element may be formed in a variety of different ways including (but not limited to) forming a loop by printing traces on both sides of a PCB and connecting the traces with wrap-around connections or plated feedthroughs.

FIG. **5** illustrates a cross-sectional view **500** of one exemplary embodiment of an antenna system in a wireless communications device, where the antenna system is configured to transmit and receive RF signals in a bandwidth around 2.4 GHz. In FIG. **5**, a dielectrically-loaded loop element **501** is wrapped around a PCB **503** and an LCD display **504**, as described above. Backplate **502** functions as a planar element as described above. A plastic cover **505** completes the assembly. For clarity of illustration, other components which may be present in a wireless communications device (e.g., a radio frequency transceiver, a digital processing system, a storage device and a battery) are not shown.

FIG. **6**A illustrates another view of device **500**, rotated 90 degrees and with plastic cover **505** removed. In the embodiment illustrated in FIGS. **5** and **6**, dielectrically-loaded loop element **501** includes an aperture of approximately 36 millimeters (mm) by 3.2 mm and backplate **502** has a footprint of approximately 90 mm by 40 mm. PCB **503** has a footprint of approximately 87 mm by 38 mm and a thickness of 0.6 mm. PCB **503** may be fabricated from G10/FR-4 fiberglass epoxy laminate material conforming to Mil-I-24768/2 and/or Mil-24768/27, for example. Plastic cover **505** may be any plastic housing material as is normally used in portable electronic devices (e.g., ABS, polycarbonate, polystyrene or the like).

Each of PCB **503**, LCD **504** and plastic cover **505** may be characterized by a dielectric constant that, as is known in the art, reduces the propagation velocity of electromagnetic energy and increases the electrical length (in contrast to the physical length) of those materials and surrounding structures which are electromagnetically coupled with the dielectric materials. For the configuration illustrated in FIGS. **5** and **6**A, it has been determined experimentally that the electrical length of the long dimension of backplate **502** (i.e., approximately 90 mm) is approximately one-wavelength at approximately 2.4 GHz and the electrical length of the short dimension of backplate **502** (i.e., approximately 40 mm) is approximately one-half wavelength at approximately 2.4 GHz. It will be appreciated that device **500** is an exemplary embodiment, and that the dimensions of device **500** may be scaled to achieve comparable electrical lengths at other frequencies of interest.

Exemplary embodiment **500** is illustrated in FIG. **6**A with a substantially rectangular footprint. Other embodiments of the invention, as illustrated in FIGS. **6**B through **6**E, for example, may have other footprints, such as a substantially square footprint (FIG. **6**B), a substantially circular footprint (FIG. **6**C), a substantially elliptical footprint (FIG. **6**D), a substantially semi-circular footprint (FIG. **6**E) or combinations thereof having principle dimensions (e.g., perimeters, diameters, diagonals, etc.) compatible with half-wave and full-wave resonant modes at a frequency of interest. For example, in FIGS. **6**B through **6**E, principle dimensions d**1**, d**2**, d**3** or d**4** may be approximately a half wavelength at a frequency of interest in various alternative embodiments. In yet other embodiments, principle dimensions d**1**, d**2**, d**3** or d**4** may be approximately one wavelength at a frequency of interest.

FIG. **7** is a plot **1000** of return loss versus frequency at the driven end **507** of dielectrically-loaded loop element **501** in device **500**. As is known in the art, return loss is a direct measure of the impedance match at the input of a circuit, and is an indirect measure of the efficiency of an antenna system. As shown by plot **1000**, the return loss is greater than or equal to approximately 8 decibels (dB) from 2.25 GHz to 2.95 GHz, which represents approximately 85% efficiency (ignoring resistive losses) over a 13.5% bandwidth.

FIG. **8**A is a horizontally polarized azimuth (X-Y plane) antenna pattern **800**A device **500** for the orientation illustrated in FIG. **9**. Antenna pattern **800**A includes superimposed patterns at 2.400 GHz, 2.440 GHz and 2.485 GHz, having average gains of −2.5 dBi (dB relative to an isotropic radiator), −2.6 dBi and −3.0 dBi, respectively.

FIG. **8**B is a vertically polarized (cross-polarized) azimuth (X-Y plane) antenna pattern **800**A of device **500** for the orientation illustrated in FIG. **9**. Antenna pattern **800**B includes superimposed patterns at 2.400 GHz, 2.440 GHz and 2.485 GHz.

FIG. **10**A is a vertically polarized (co-polarized) elevation (X-Z plane) antenna pattern **1000**A of device **500** for the orientation illustrated in FIG. **11**. Antenna pattern **1000**A includes superimposed patterns at 2.4 GHz, 2.44 GHz and 2.485 GHz, having peak gains of approximately 0 dBi at zero degrees and 180 degrees and 3 dB (half-power) beamwidths of approximately 60 degrees.

FIG. **10**B is a horizontally polarized elevation (X-Z plane) antenna pattern **1000**B of device **500** for the orientation illustrated in FIG. **11**. Antenna pattern **1000**A includes superimposed patterns at 2.4 GHz, 2.44 GHz and 2.485 GHz

FIGS. **12** and **13** illustrate one embodiment of an antenna system in a wireless communication device **1200**. Device **1200** may include a dielectrically-loaded loop element **501**, a PCB **503**, a backplate **502** and a plastic cover **505** as previously described. As noted above, the device **1300** may be dimensionally scaled to achieve antenna resonance at other frequencies of interest.

FIG. **14** is a block diagram illustrating a wireless device **1400**, as described above, in which embodiments of the antenna system described herein may be implemented. Wireless device **1500** may be, for example, a portable media player, a cellular telephone, a smart phone, a personal digital assistant (PDA) or other portable wireless device. Wireless device **1400** may include an antenna system **1401**, which may be antenna system **500** or **1200**, for example. Wireless device **1400** may also include a digital radio frequency (RF) transceiver **1402**, coupled to the antenna system **1401**, to transmit and/or receive digital voice, data and/or media signals through antenna system **1401**. Wireless device **1400** may also include a digital processing system **1403** to control the digital RF transceiver and to manage the digital voice, data and/or media signals. Digital processing system **1403** may be a general purpose processing device, such as a microprocessor or controller for example. Digital processing system **1403** may also be a special purpose processing device, such as an ASIC (application specific integrated circuit), FPGA (field-programmable gate array) or DSP (digital signal processor). Digital processing system **1403** may also include other devices, as are known in the art, to interface with other components of wireless device **1400**. For example, digital processing system **1403** may include analog-to-digital and digital-to-analog converters to interface with other components of wireless device **1400** as described below. Digital processing system **1403** may include a media processing system **1409**, which may also include a general purpose or special purpose processing device to manage media

Wireless device **1400** may also include a storage device **1404**, coupled to the digital processing system, to store data and/or operating programs for the wireless device **1400**. Storage device **1404** may be, for example, any type of solid-state or magnetic memory device. Wireless device **1400** may also include one or more input devices **1405**, coupled to the digital processing system **1403**, to accept user inputs (e.g., telephone numbers, names, addresses, media selections, etc.) Input device **1405** may be, for example, one or more of a keypad, a touchpad, a touch screen, a pointing device in combination with a display device or similar input device. Wireless device **1400** may also include a display device **1406**, coupled to the digital processing system **1403**, to display information such as messages, contact information, pictures, movies and/or titles or other indicators of media being selected via the input device **1405**. Display device **1406** may be, for example, an LCD display device such as LCD display **504**. In one embodiment, display device **1406** and input device **1405** may be the same device (e.g., a touch screen LCD). Wireless device **1400** may also include a battery **1407** to supply operating power to components of the system including digital RF transceiver **1402**, digital processing system **1403**, storage device **1404**, input device **1405**, audio transducer **1408** and display device **1406**. Battery **1407** may be, for example, a rechargeable or non-rechargeable lithium or nickel metal hydride battery. Wireless device **1400** may also include audio transducers **1408**, which may be one or more speakers and/or microphones for example.

In one embodiment, digital RF transceiver **1402**, digital processing system **1403** and/or storage device **1404** may include one or more integrated circuits disposed on a PCB such as PCB **501** described above and included within a volume defined by or adjacent to the substantially planar element **502**.

As is known in the art, antenna systems are governed by the laws of reciprocity. Therefore, it will be appreciated that any discussion above with respect to transmission properties of embodiments of the described antenna systems applies equally to reception properties. Conversely, any discussion above with respect to reception properties of embodiments of the described antenna systems applies equally to transmission properties.

In the foregoing specification, the invention has been described with reference to specific exemplary embodiments thereof. It will be evident that various modifications may be made thereto without departing from the broader spirit and scope of the invention as set forth in the following claims. The specification and drawings are, accordingly, to be regarded in an illustrative sense rather than a restrictive sense.

What is claimed is:

1. An antenna system, comprising:

a dielectrically-loaded loop element; and

a substantially planar element coupled with the dielectrically-loaded loop element, wherein the substantially planar element is disposed substantially parallel to a major axis of the dielectrically-loaded loop element, substantially perpendicular to a minor axis of the dielectrically-loaded loop element and wherein the dielectrically-loaded loop element comprises a first section and a second section coupled to the first section, the first section comprising a printed conductor on a printed circuit board (PCB) assembly and the second section comprising a printed conductor on a flexible printed circuit, wherein the flexible printed circuit is configured to conform to a component of the PCB assembly.

2. The antenna system of claim **1** wherein the major axis of the dielectrically-loaded loop element is disposed substantially parallel to an edge of the substantially planar element and substantially parallel to a face of the substantially planar element.

3. The antenna system of claim **1**, wherein the substantially planar element has one of a substantially rectangular footprint, a substantially square footprint, a substantially circular footprint, a substantially semi-circular footprint and a substantially elliptical footprint.

4. The antenna system of claim **3**, wherein the substantially planar element is dielectrically loaded, wherein a principle dimension of the substantially planar element is approximately one wavelength at a center frequency of the antenna system.

5. The antenna system of claim **3**, wherein the substantially planar element is dielectrically loaded, wherein a principle dimension of the substantially planar element is approximately one-half wavelength at a center frequency of the antenna system.

6. An antenna system, comprising:

a dielectrically-loaded loop element; and

a substantially planar element coupled with the dielectrically-loaded loop element, wherein the substantially planar element is disposed substantially parallel to a major axis of the dielectrically-loaded loop element, substantially perpendicular to a minor axis of the dielectrically-loaded loop element and wherein the dielectrically-loaded loop element comprises an aperture having an aspect ratio approximately equal to or greater than 7:1 and an electrical length approximately less than or equal to one wavelength at a center frequency of the antenna system.

7. The antenna system of claim **6**, wherein the dielectrically-loaded loop element comprises a loop element enclosing a printed circuit board (POB) assembly.

8. The antenna system of claim **7**, wherein the dielectrically-loaded loop element comprises a first conductor on a first side of the PCB assembly and a second conductor on a second side of the PCB assembly, wherein the first conductor and the second conductor are connected by one of a plated feed-through and a PCB wrap-around.

9. The antenna system of claim **7**, wherein the substantially planar element comprises a metallic back plate of an enclosure of the printed circuit board assembly, and wherein the enclosure of the printed circuit board assembly includes a non-metallic front cover.

10. The antenna system of claim **6**, wherein the dielectrically-loaded loop element is separated from the substantially planar element by less than or equal to approximately one-fortieth of a free-space wavelength at the center frequency of the antenna system.

11. The antenna system of claim **6**, wherein a return loss of the antenna system is greater than or equal to approximately 8 decibels (dB)over an approximately 13 percent bandwidth, wherein an average azimuth gain of the antenna system is approximately −2.6 dB relative to an isotropic radiator (dBi) at a center frequency of the antenna system, and wherein an elevation pattern of the antenna system is characterized by a peak gain of approximately 0 dBi and a half-power beamwidth of approximately 60 degrees.

12. A method of manufacturing an antenna system, comprising:

printing a first portion of a loop element on a printed circuit board (PCB);

printing a second portion of the loop element as a trace on a flexible circuit;

loading the PCB with PCB components to fabricate a PCB assembly;

attaching the second portion of the loop element to the first portion of the loop element;

forming the second portion of the loop element to the PCB assembly; and

mounting the PCB assembly within a support element having a substantially planar portion.

* * * * *

UNITED STATES PATENT AND TRADEMARK OFFICE

CERTIFICATE OF CORRECTION

PATENT NO. : 7,773,041 B2
APPLICATION NO. : 11/486223
DATED : August 10, 2010
INVENTOR(S) : Shu-Li Wang

It is certified that error appears in the above-identified patent and that said Letters Patent is hereby corrected as shown below:

In column 2, line 27, before "DESCRIPTION" insert -- BRIEF --.

In column 2, line 44, delete "on" and insert -- in --, therefor.

In column 4, lines 19-20, delete "tetraflouroethylene" and insert -- tetrafluoroethylene --, therefor.

In column 6, line 46, delete "800A device" and insert -- 800A of device --, therefor.

In column 7, line 36, after "media" insert -- . --.

In column 9, line 3, in Claim 7, delete "(POB)" and insert -- (PCB) --, therefor.

Signed and Sealed this
Twenty-second Day of November, 2011

David J. Kappos

David J. Kappos
Director of the United States Patent and Trademark Office