US009223345B2

(12) **United States Patent**
**Dabov et al.**

(10) **Patent No.: US 9,223,345 B2**
(45) **Date of Patent: Dec. 29, 2015**

(54) **ASSEMBLY OF A HANDHELD ELECTRONIC DEVICE**

(71) Applicant: **Apple Inc.**, Cupertino, CA (US)

(72) Inventors: **Teodor Dabov**, Mountain View, CA (US); **Fletcher R. Rothkopf**, Mountain View, CA (US); **Philipe R. Manoux**, Oakland, CA (US)

(73) Assignee: **Apple Inc.**, Cupertino, CA (US)

( * ) Notice: Subject to any disclaimer, the term of this patent is extended or adjusted under 35 U.S.C. 154(b) by 238 days.

(21) Appl. No.: **13/924,429**

(22) Filed: **Jun. 21, 2013**

(65) **Prior Publication Data**

US 2013/0286582 A1 Oct. 31, 2013

**Related U.S. Application Data**

(63) Continuation of application No. 12/204,350, filed on Sep. 4, 2008, now Pat. No. 8,472,203.

(60) Provisional application No. 60/967,565, filed on Sep. 4, 2007.

(51) **Int. Cl.**

| | |
|---|---|
| ***H05K 9/00*** | (2006.01) |
| ***H05K 7/18*** | (2006.01) |
| ***H01Q 1/24*** | (2006.01) |
| ***G06F 1/16*** | (2006.01) |
| ***H01Q 1/42*** | (2006.01) |
| ***H05K 7/00*** | (2006.01) |

(52) **U.S. Cl.**

CPC ..... ***G06F 1/1633*** (2013.01); ***H01Q 1/243*** (2013.01); ***H01Q 1/42*** (2013.01); ***H05K 7/00*** (2013.01); ***H05K 9/0016*** (2013.01); ***H05K 9/0026*** (2013.01); ***H05K 9/0037*** (2013.01)

(58) **Field of Classification Search**

CPC ..... H01Q 1/243; H01Q 1/42; H05K 9/0016; H05K 9/0026

USPC ..... 174/351; 361/799, 800, 816, 818; 343/702

See application file for complete search history.

(56) **References Cited**

U.S. PATENT DOCUMENTS

| | | | | |
|---|---|---|---|---|
| 5,491,613 | A * | 2/1996 | Petitpierre | 361/800 |
| 5,647,748 | A * | 7/1997 | Mills et al. | 439/81 |
| 6,065,980 | A * | 5/2000 | Leung et al. | 439/92 |
| 7,132,987 | B1 * | 11/2006 | Olsson et al. | 343/702 |
| 2005/0017909 | A1 * | 1/2005 | Carpenter et al. | 343/702 |
| 2007/0052100 | A1 * | 3/2007 | Bellinger | 257/758 |
| 2008/0316117 | A1 * | 12/2008 | Hill et al. | 343/702 |
| 2009/0040115 | A1 * | 2/2009 | Zhang et al. | 343/702 |

* cited by examiner

*Primary Examiner* — Sherman Ng
(74) *Attorney, Agent, or Firm* — Downey Brand LLP

(57) **ABSTRACT**

This invention is directed to several mechanical features of an electronic device. The electronic device may include a spring for simultaneously grounding several components. The electronic device may include several interlocking fences for protecting electronic device components from RF radiation. The electronic device may include an antenna assembly that includes distinct components for functional and aesthetic purposes. The electronic device may include a window for permitting RF transmissions. The electronic device may include a metal frame for stiffening the electronic device. The electronic device may include a bezel used for aesthetic purposes and to support numerous electronic device components. The electronic device may include a flexible housing operative to elastically deform to assemble the electronic device. The electronic device may include an unsupported button.

**14 Claims, 18 Drawing Sheets**

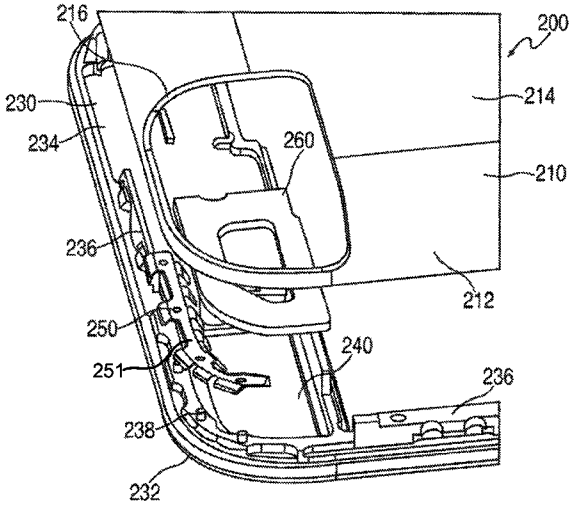

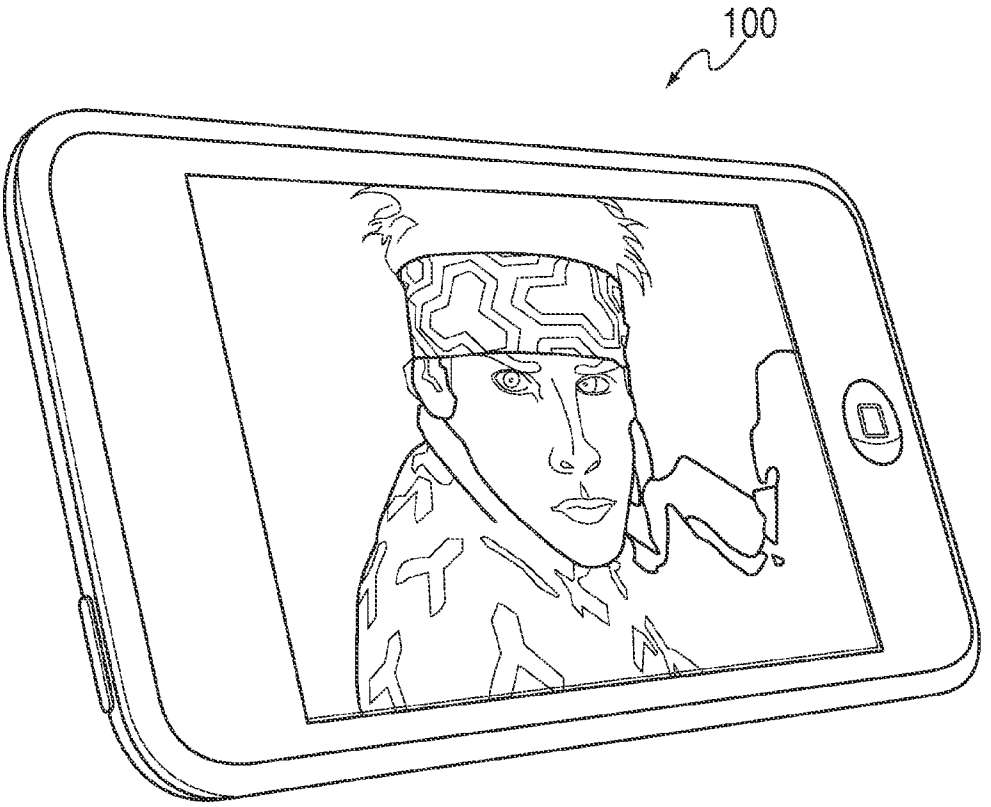


FIG. 1A

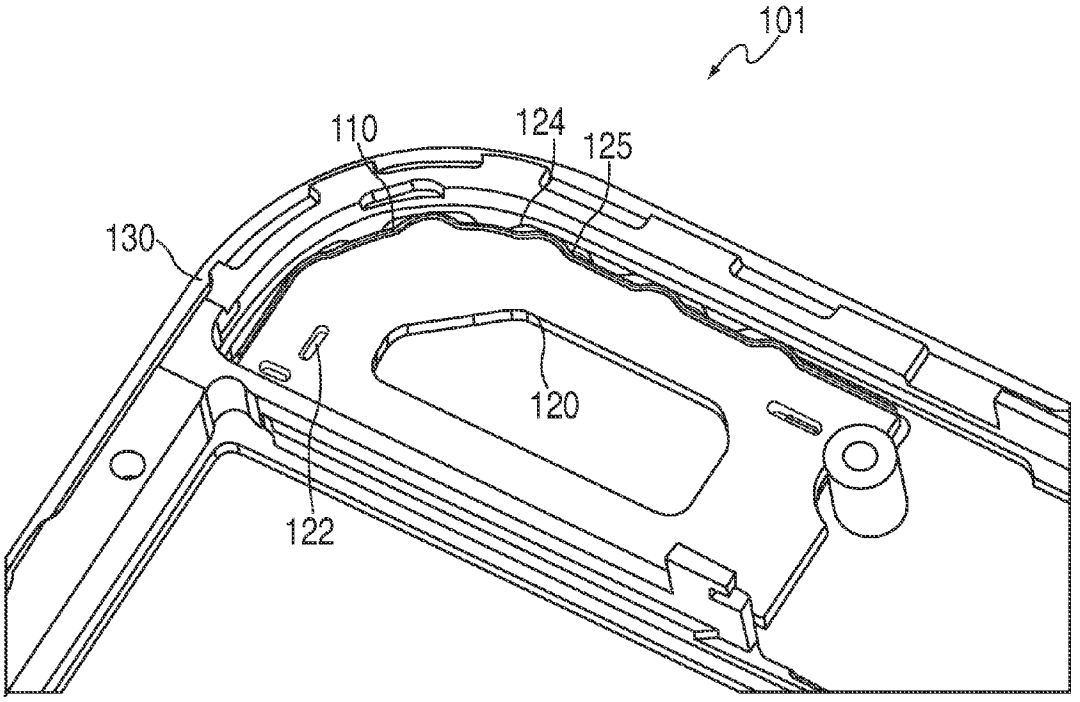


FIG. 1B

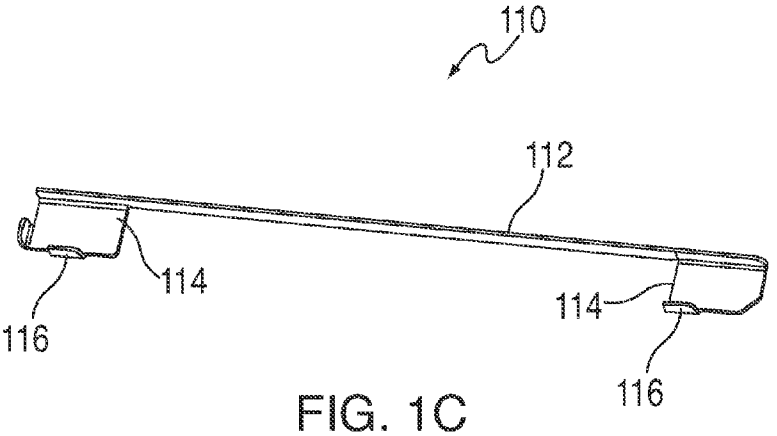


FIG. 1C

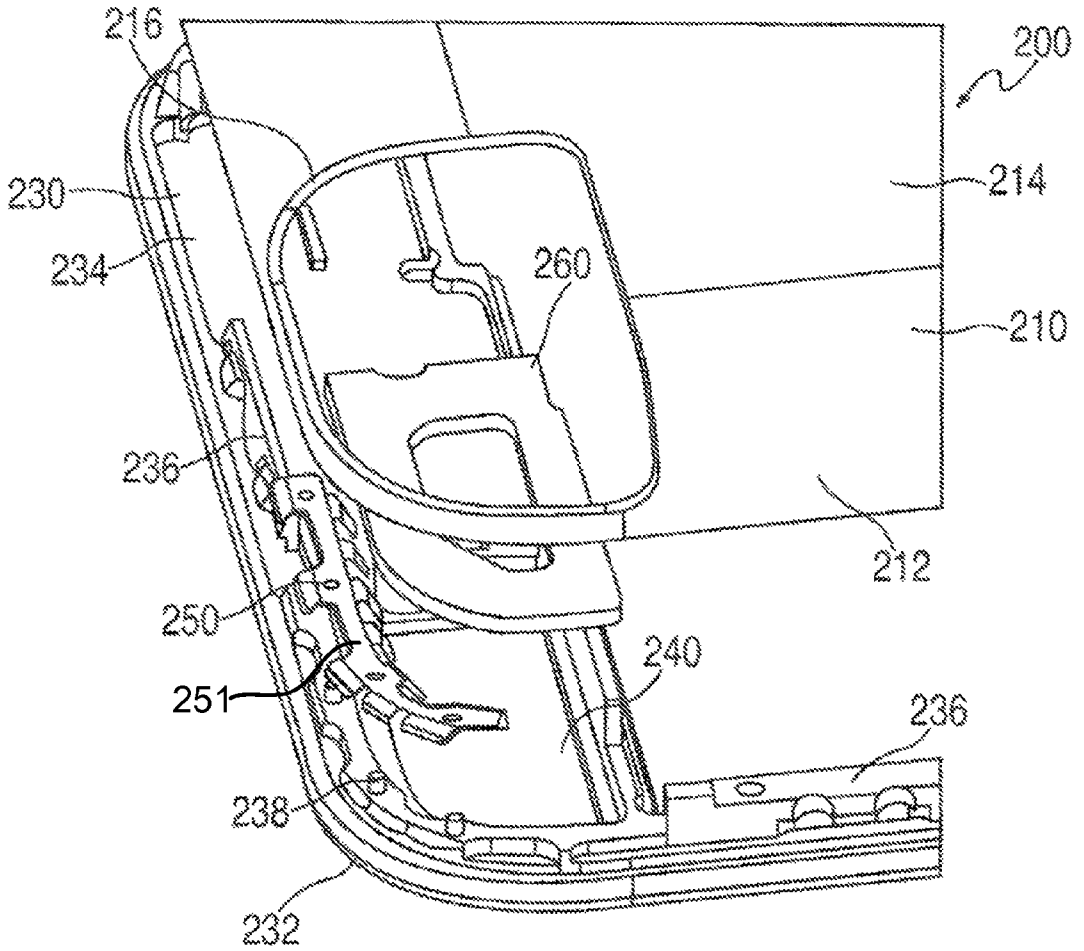


FIG. 2A

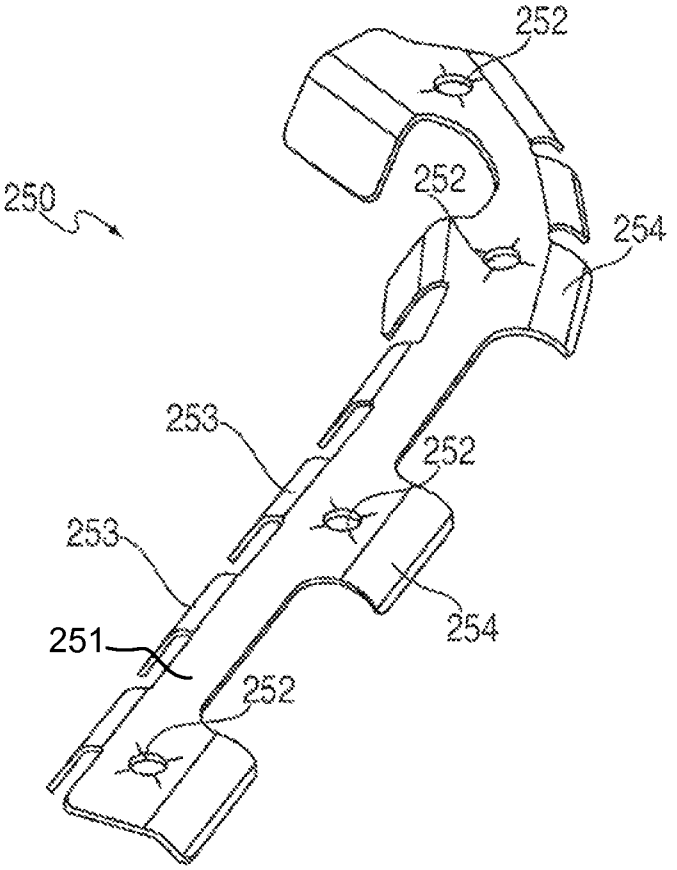


FIG. 2B

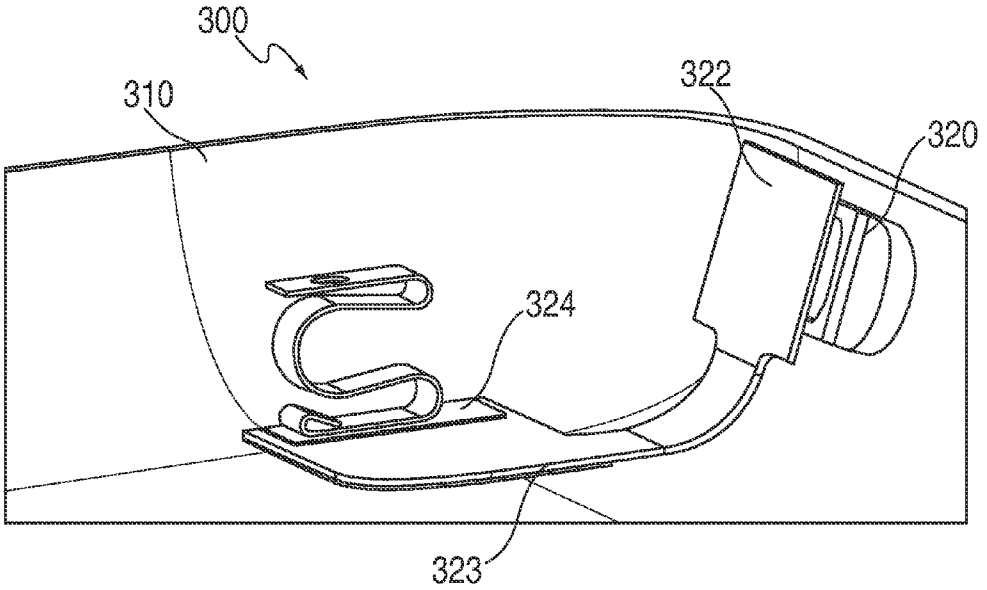
300
310
322
320
324
323

FIG. 3A

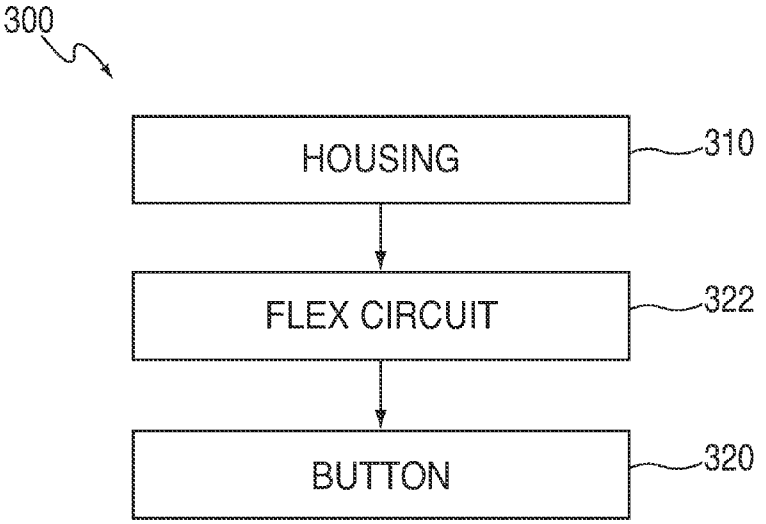
300
HOUSING
310
FLEX CIRCUIT
322
BUTTON
320

FIG. 3B

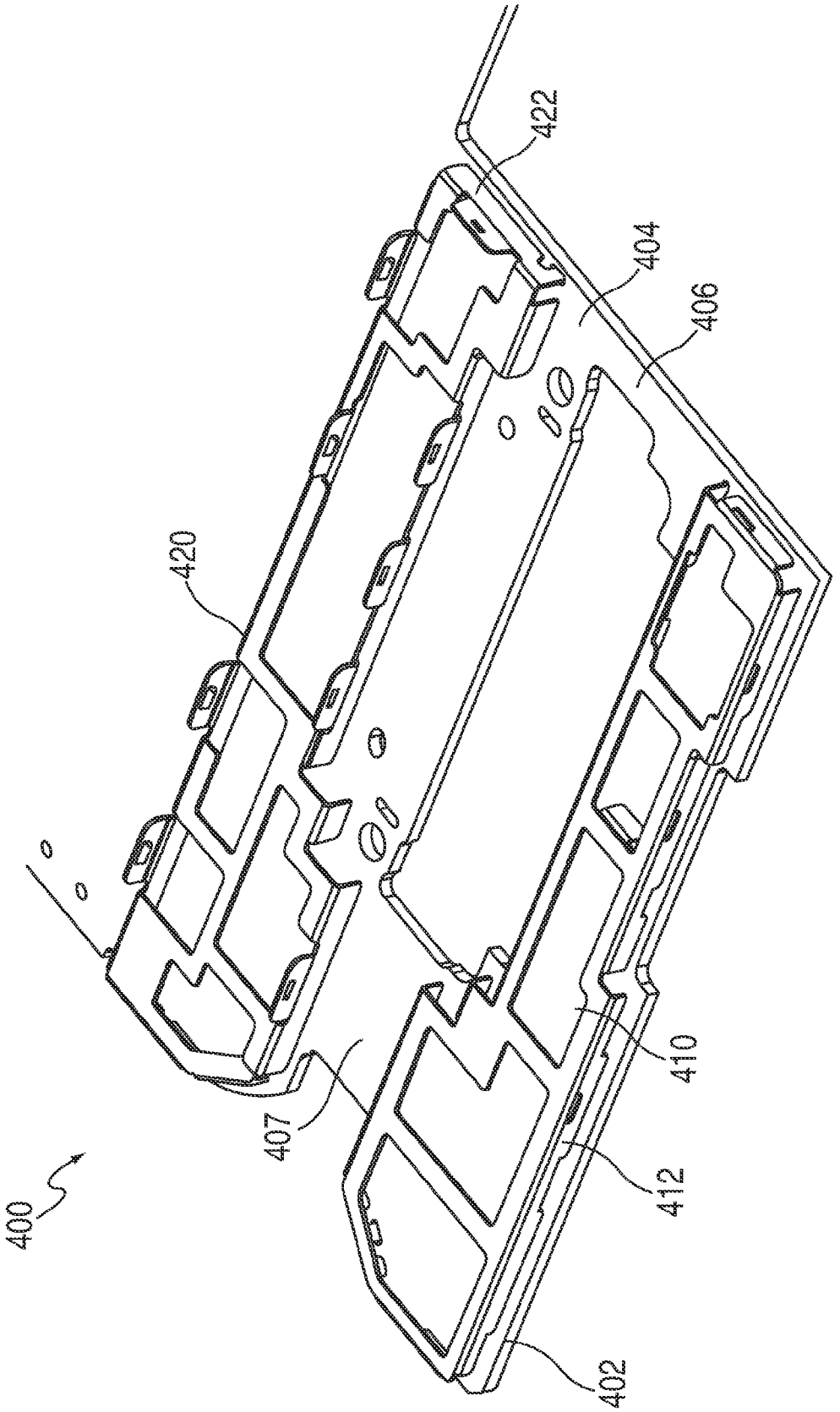


FIG. 4

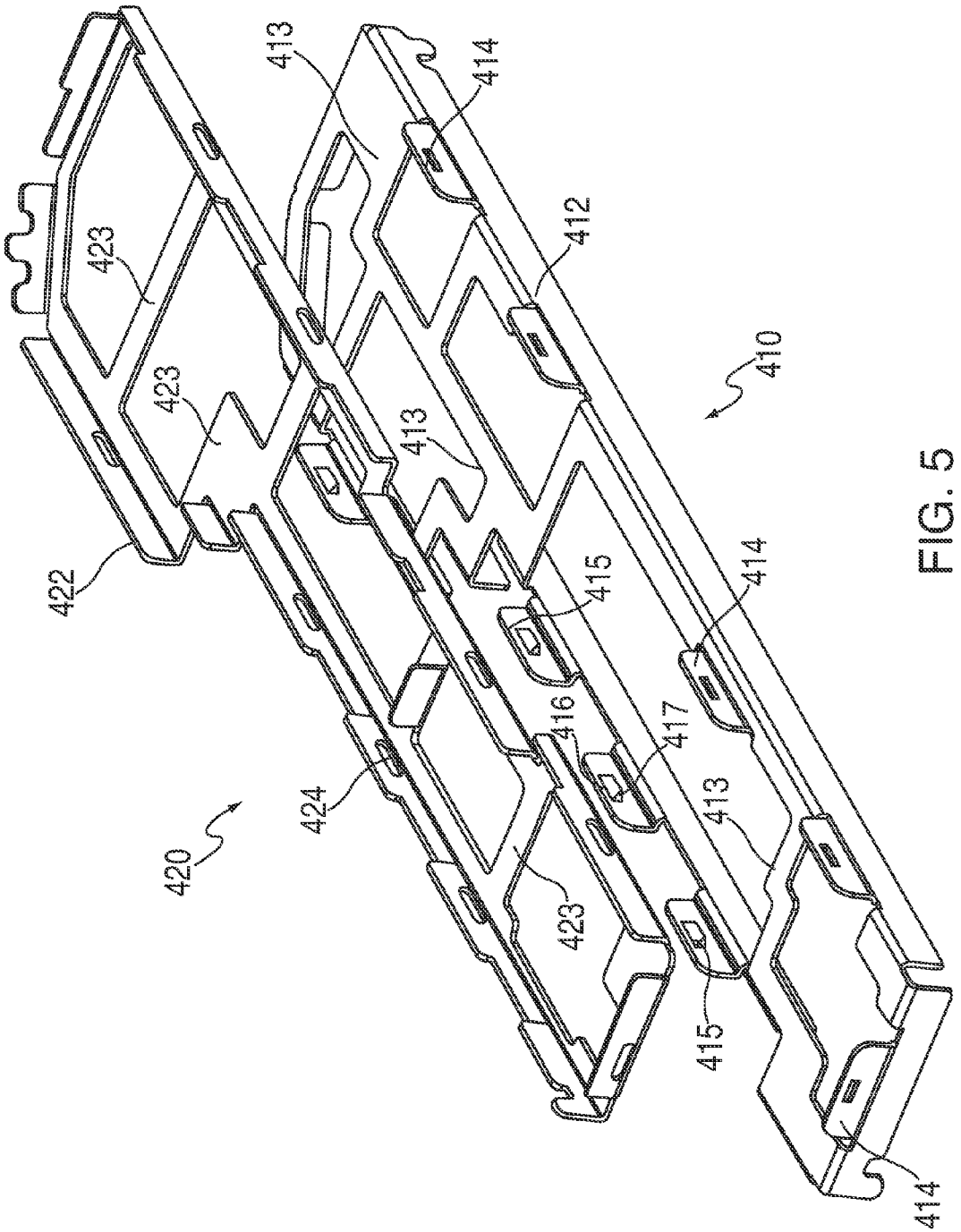


FIG. 5

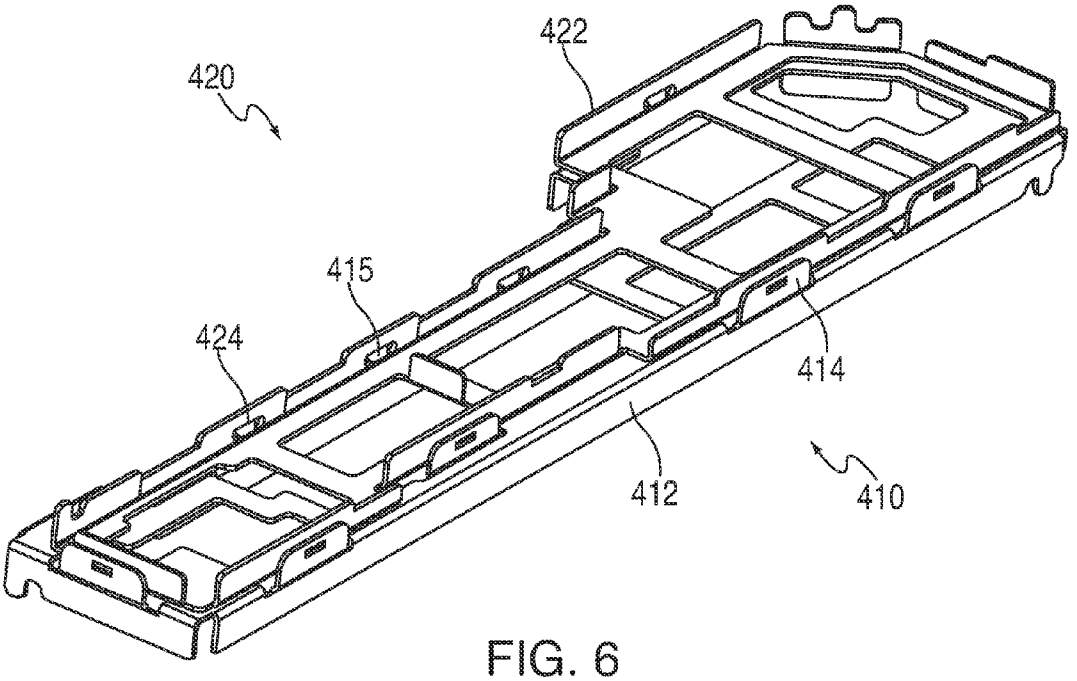
420
422
415
424
414
412
410

FIG. 6

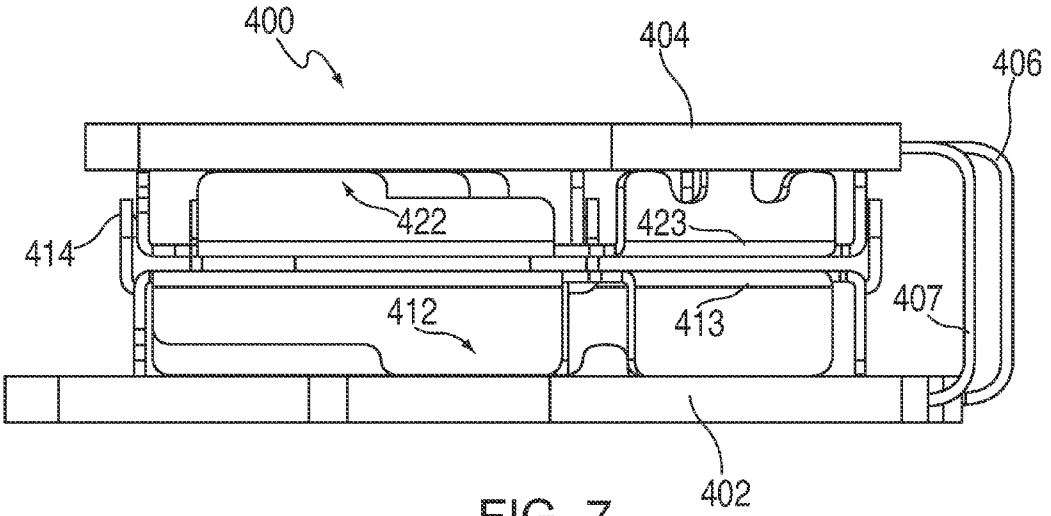
400
404
406
422
423
414
412
413
407
402

FIG. 7

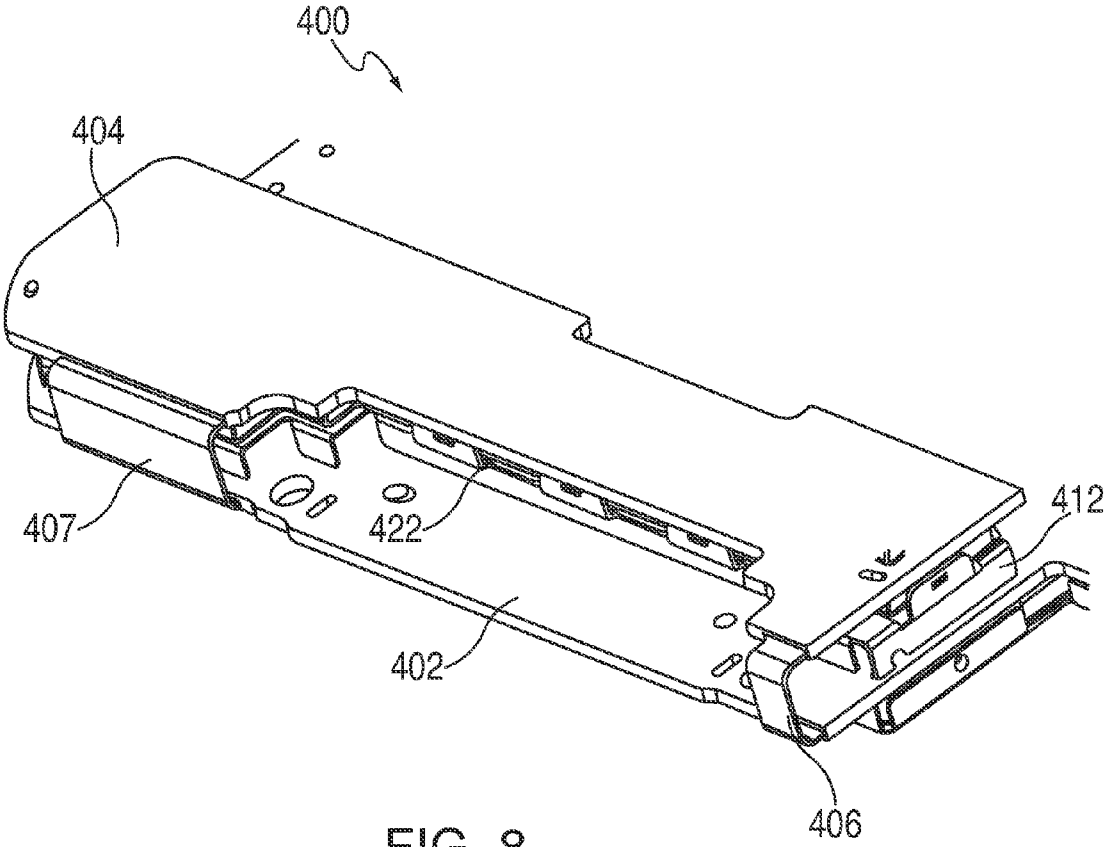


FIG. 8

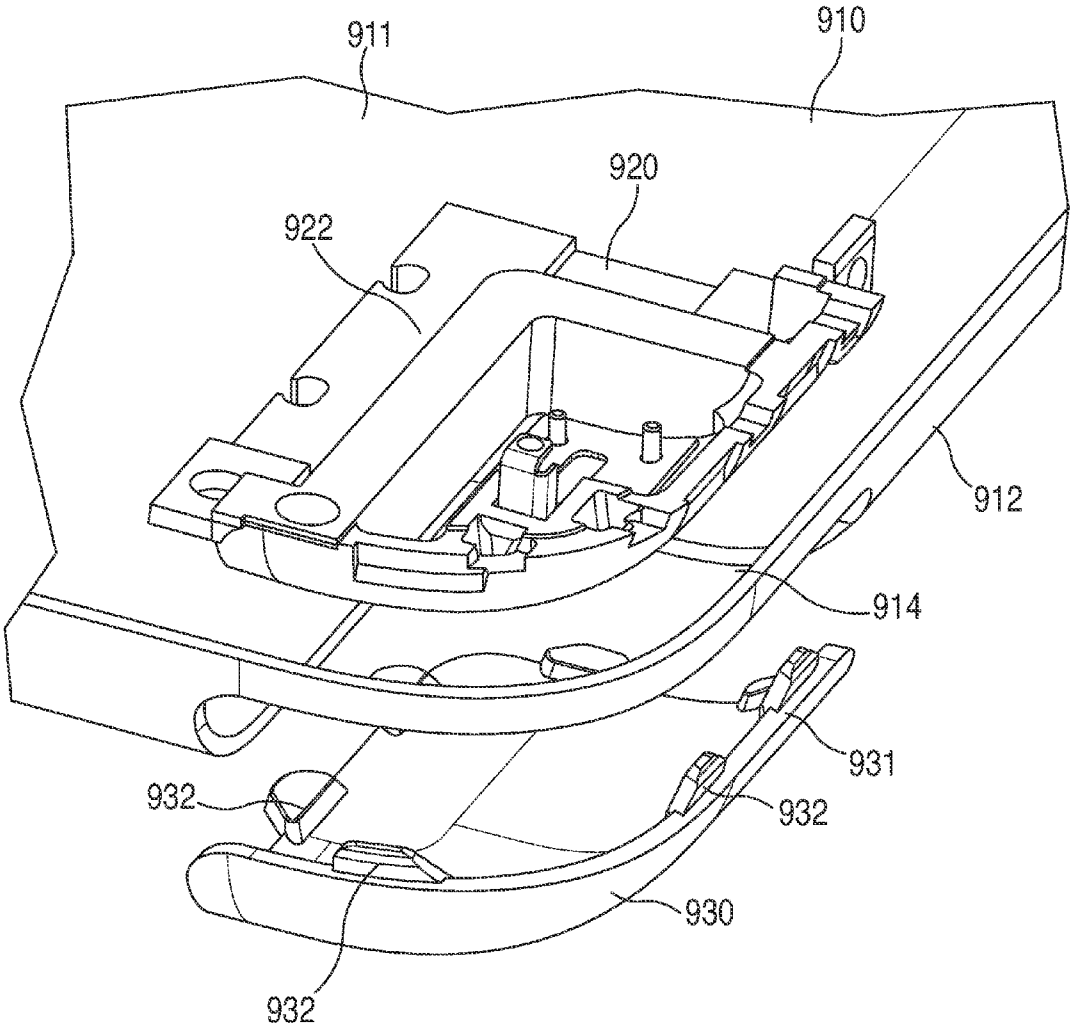


FIG. 9

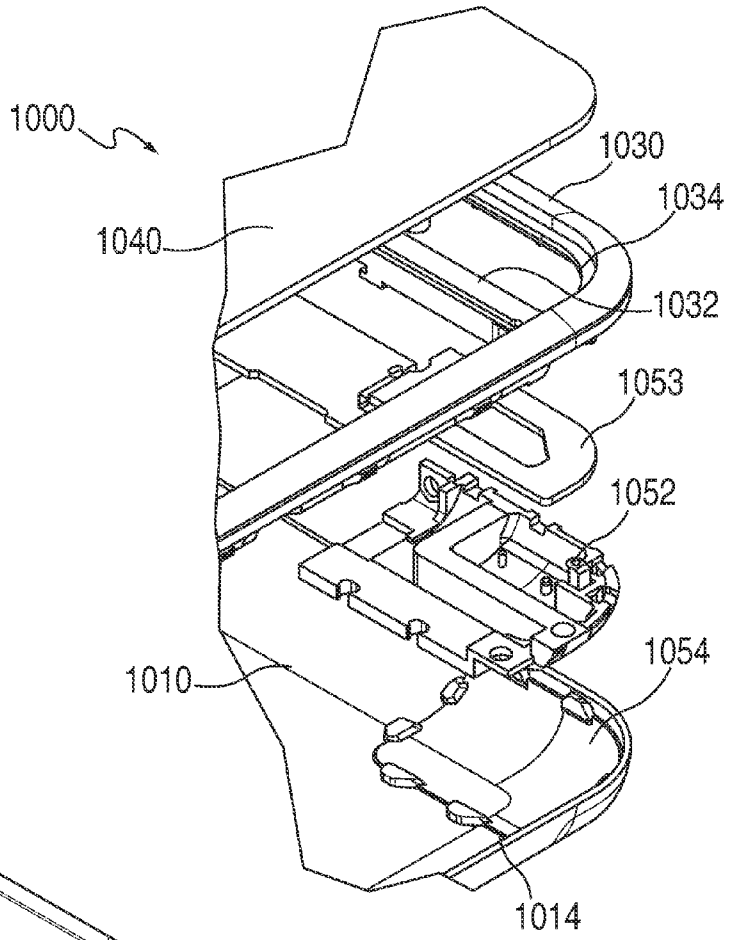
1000
1030
1034
1040
1032
1053
1052
1054
1010
1014

FIG. 10

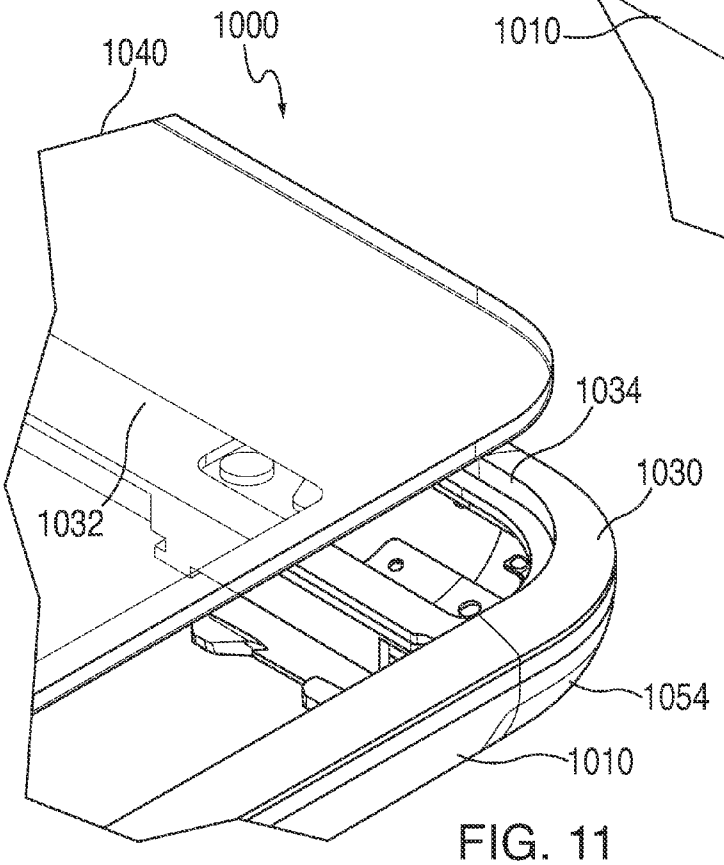
1040
1000
1034
1030
1032
1054
1010

FIG. 11

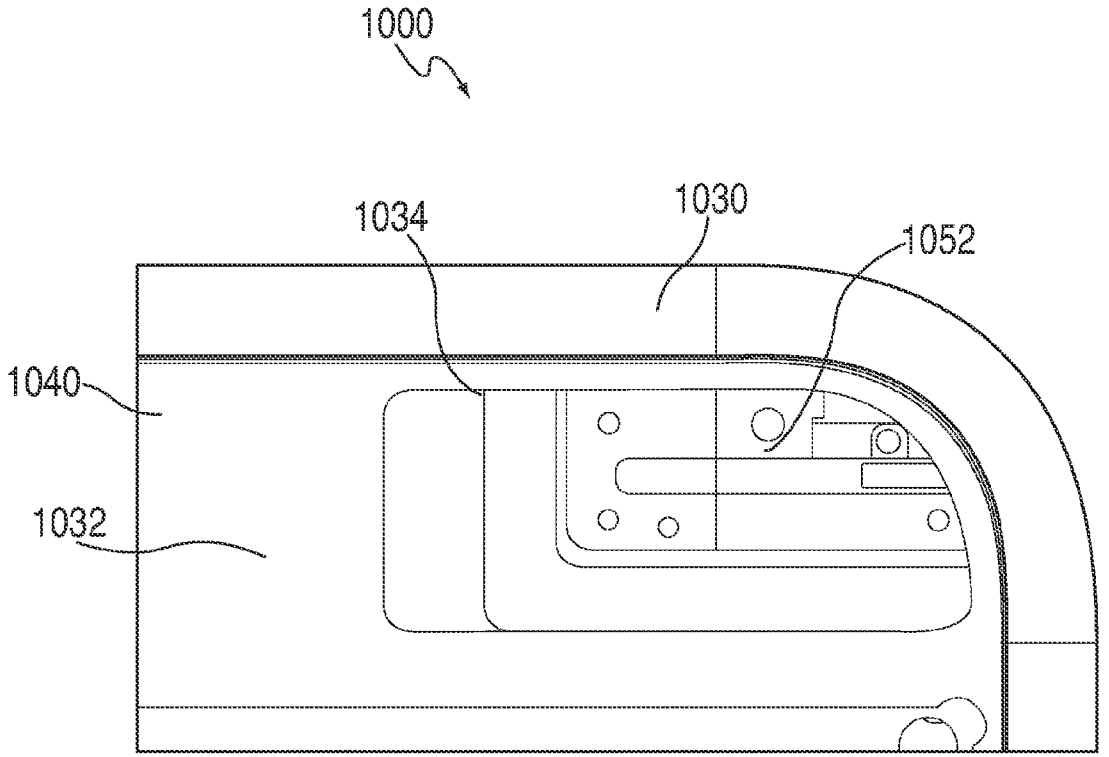


FIG. 12

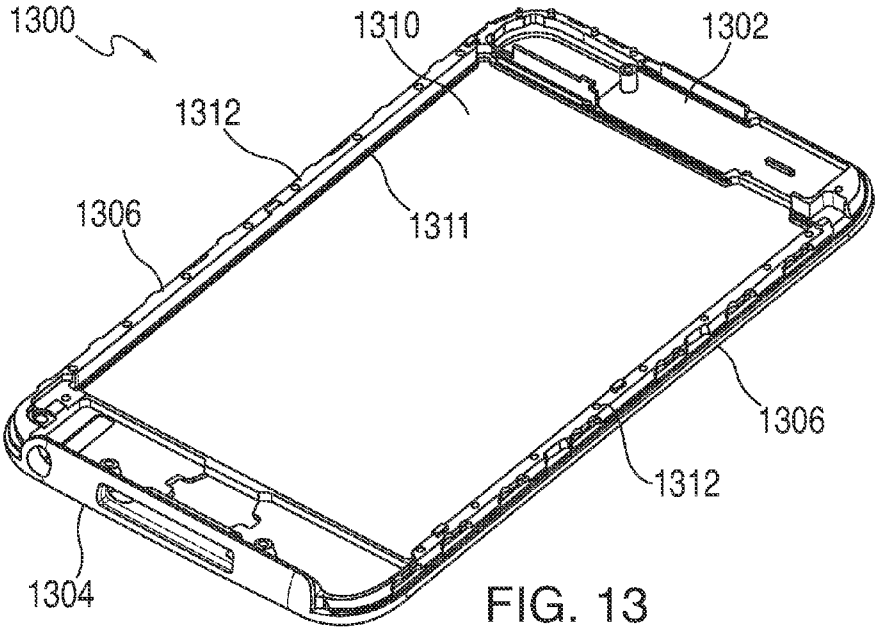
1300
1310
1302
1312
1306
1311
1306
1312
1304

FIG. 13

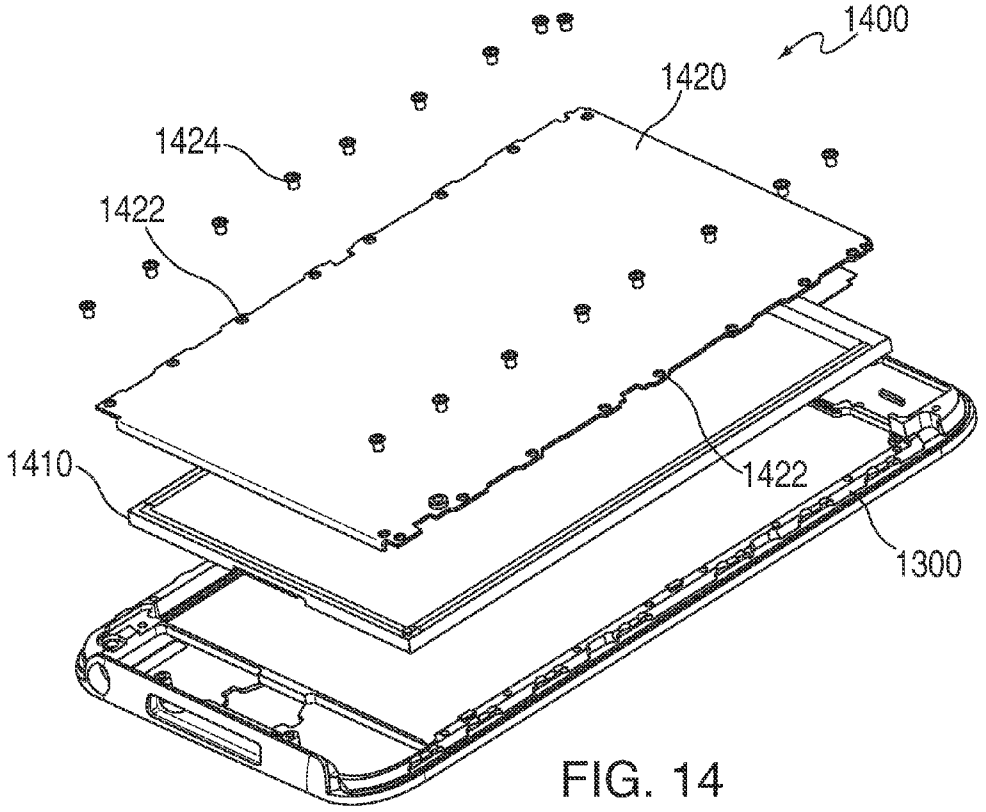
1400
1420
1424
1422
1410
1422
1300

FIG. 14

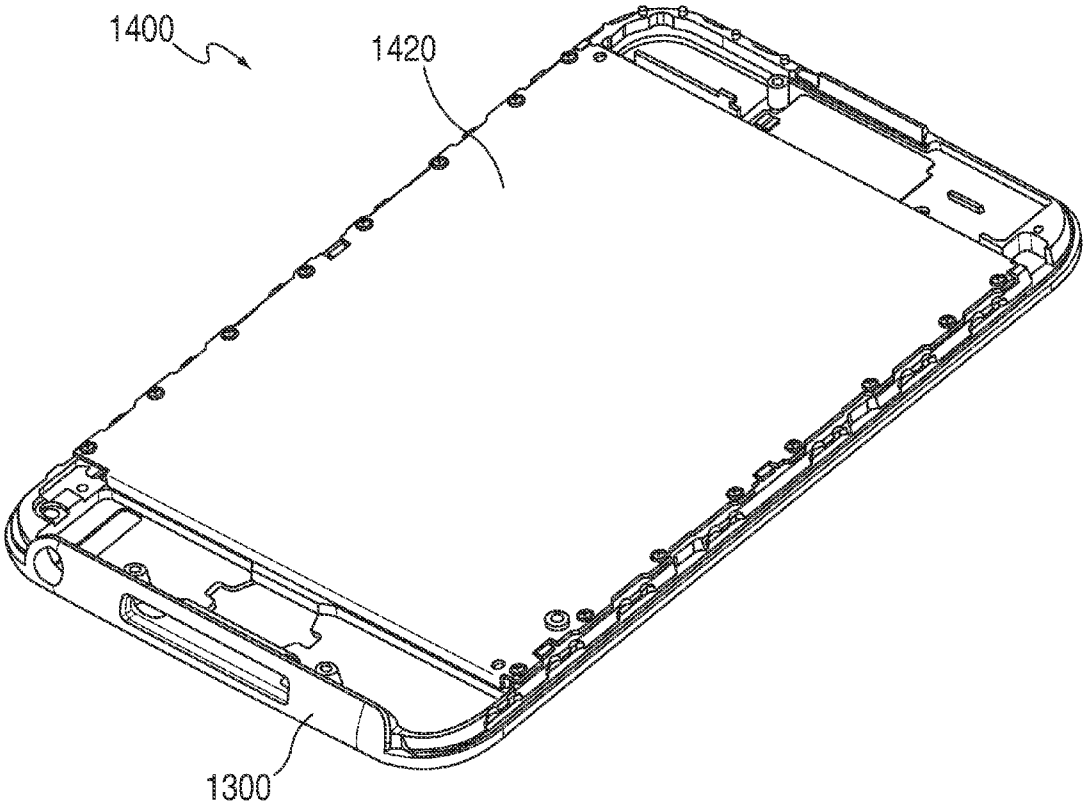


FIG. 15

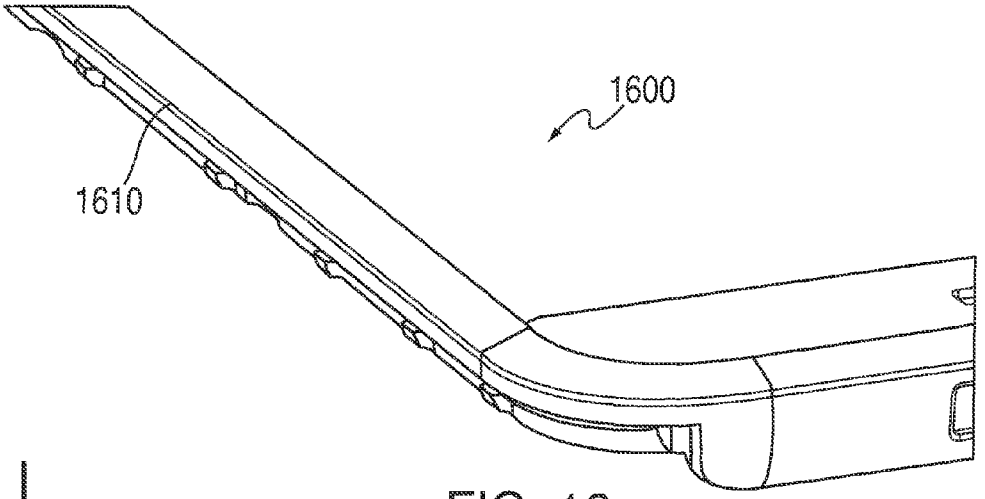


FIG. 16

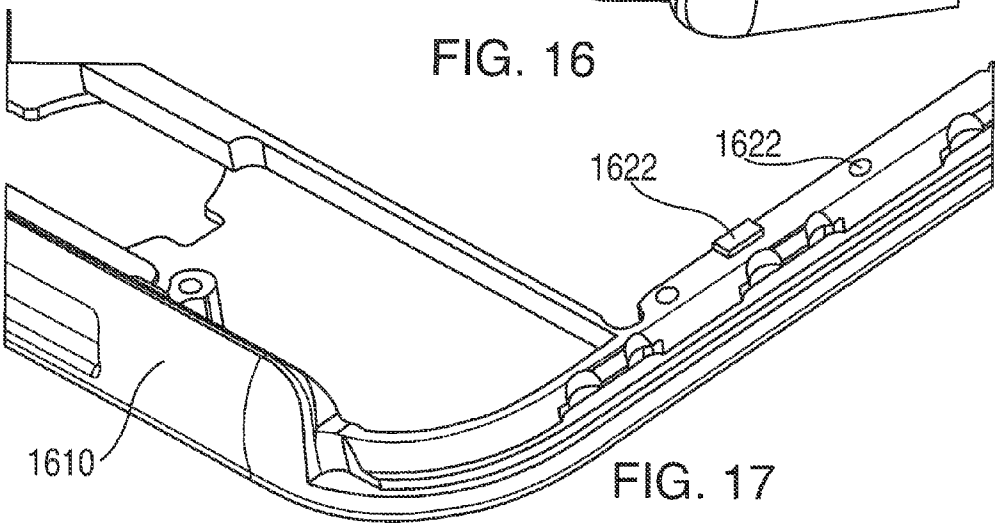


FIG. 17

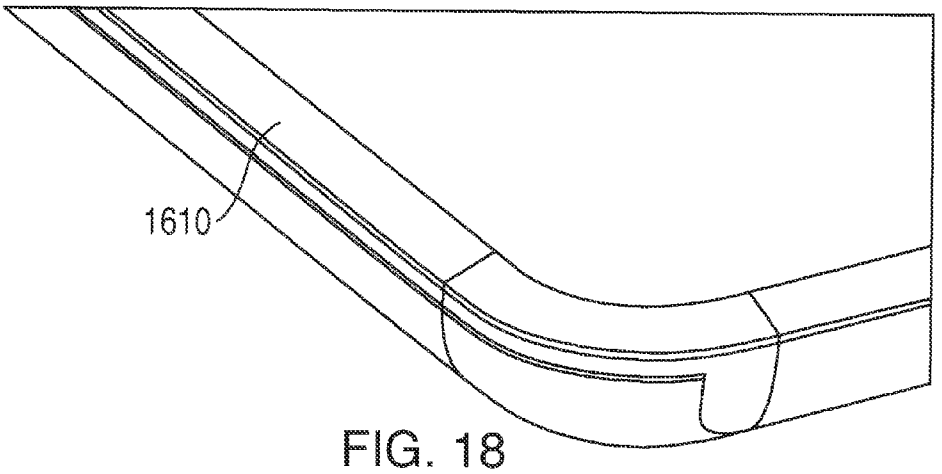


FIG. 18

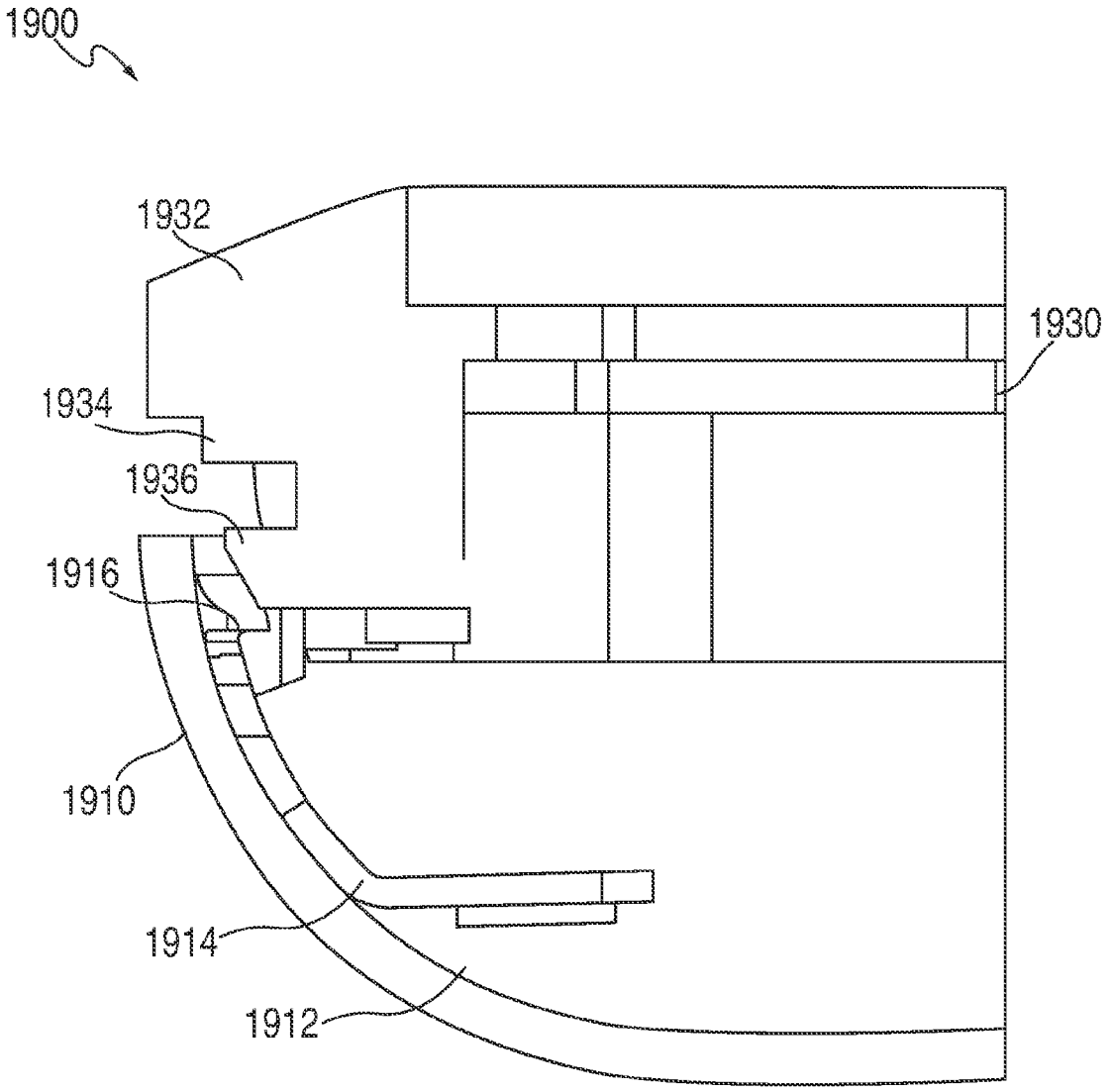


FIG. 19

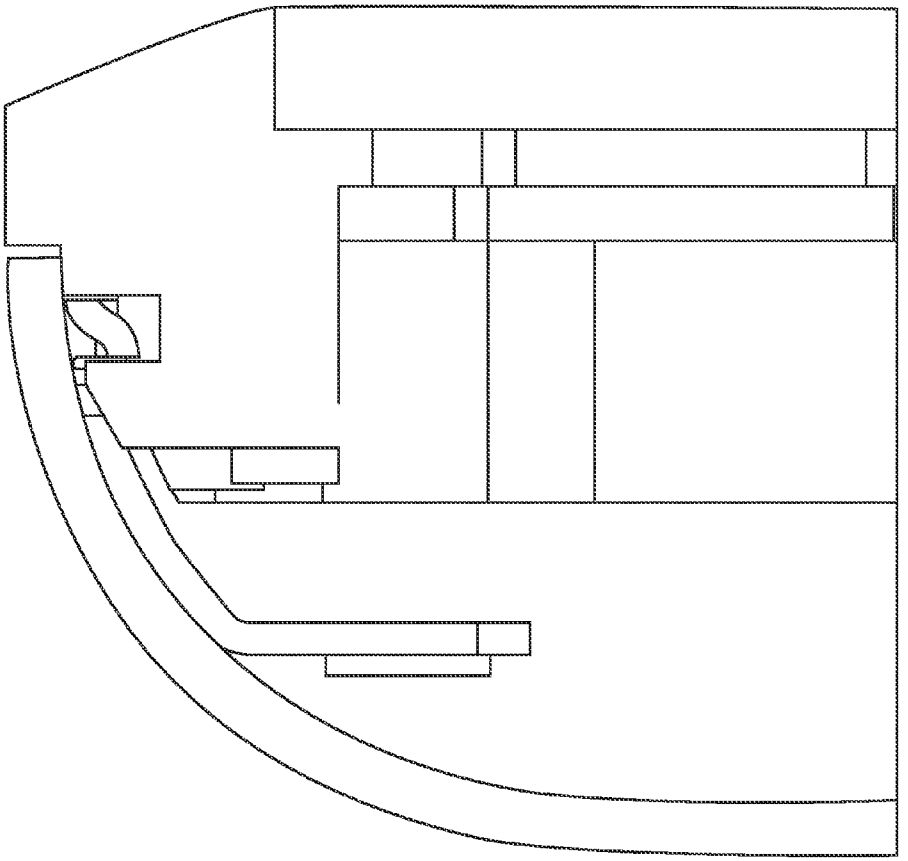

FIG. 20

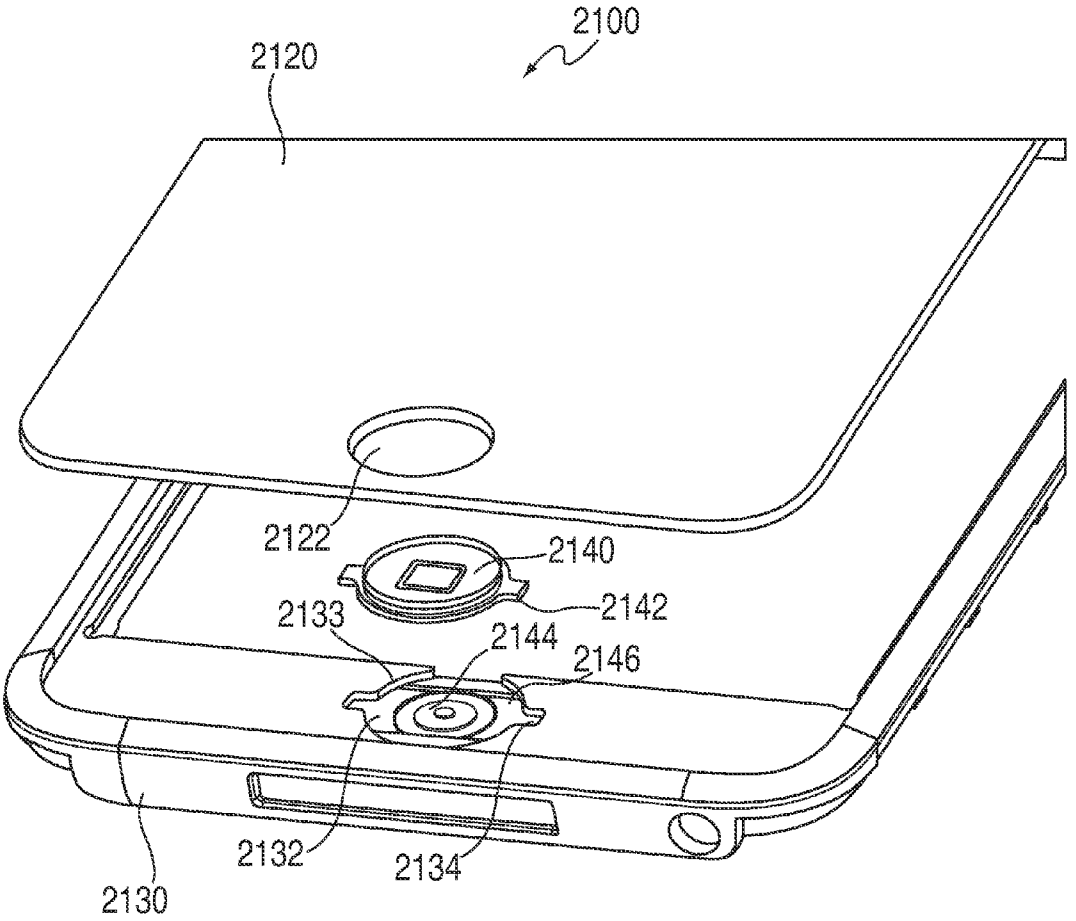


FIG. 21

# ASSEMBLY OF A HANDHELD ELECTRONIC DEVICE

## CROSS-REFERENCE TO RELATED APPLICATION

This application is a continuation of U.S. application Ser. No. 12/204,350, filed Sep. 4, 2008, which claims the benefit of U.S. Provisional Patent Application No. 60/967,565, filed Sep. 4, 2007, both of which are incorporated herein by reference in their entirety.

## BACKGROUND OF THE INVENTION

This invention is directed to mechanical features of an electronic device.

## SUMMARY OF THE INVENTION

An electronic device is provided. In some embodiments, the electronic device may include a spring for grounding a bezel, a housing, and an antenna board of the electronic device. The spring may include a base that has several of apertures, each aperture operative to receive a post extending from the top surface of a wall of the bezel. The spring may also include an inner tab extending from the base that follows the inner surface of the bezel wall and is operative to contact the antenna board mounted in the bezel. The spring may also include an outer tab extending from the base following the outer surface of the bezel wall and operative to contact the housing when the bezel is engaged with the housing.

In some embodiments, the bezel and housing of the electronic device may be electrically coupled and serve as a ground for the electronic device components. Electronic device components mounted in the housing may be electrically coupled to a circuit board of the bezel using a spring, and coupled to the housing to ground the component, for example using a flex (e.g., instead of being grounded to the board using a second connection).

The electronic device may include a circuit board protected from RF radiation. The circuit board may include a first board and a second board, the first board coupled to the second board by at least one flex tab. The circuit board may further include a first fence placed around the periphery of the components of the first board, and including at least one tab with a snap extending beyond the fence. The circuit board may still further include a second fence placed around the periphery of the components of the second board, and including at least one slot in the second fence. The first board may be operative to be placed over the second board by folding the circuit board with the at least one flex such that the first fence may be coupled to the second fence by engaging the tab and snap of the first fence with the slot of the second fence.

The electronic device may include one or more circuit boards. A circuit board may include a first board, a second board, a first flex tab electrically coupling the first board and the second board, and a second flex tab coupling the first board and the second board. The first board may be folded over the second board by bending the flex tabs.

The electronic device may include one or more antennas for performing wireless communications. In some embodiments, the electronic device may include an antenna chassis for receiving an antenna placed adjacent to an aperture in the housing. The electronic device may also include an antenna cap for closing the aperture, where the antenna cap may be inserted in the aperture from the outside of the housing by deforming the antenna cap. In some embodiments, the bezel



may include a window for allowing radiation to pass through the front surface of the electronic device to enhance wireless communications. A screen or display inserted in the bezel may be rendered partially opaque to hide the window from view.

In some embodiments, the electronic device may include a plate operative to be coupled to the bezel behind the screen to support the screen. The plate may be rigid such that, when coupled to the bezel (e.g., using screws), the combination of the plate and bezel is stiff and resists to both torsion and bending stresses.

In some embodiments, the bezel may be used both as an aesthetically pleasing or as a cosmetic component, and as a functional component for supporting the components of the electronic device. In some embodiments, all or substantially all of the electronic device components may be mounted to the bezel.

The electronic device may be assembled using any suitable approach. In some embodiments, the bezel may include a slot operative to receive a latch welded into the housing. When the bezel is inserted in the housing, the housing may elastically deform to let the bezel pass, then return to its initial position once the latches engage the bezel slots.

In some embodiments, the electronic device may include a button (e.g., a home button). Because of the limited space inside the electronic device, the button may not be mounted on a distinct component, but may instead be captured by the bezel and the screen. The button may include several flanges extending from the button that may be received by slots in the bezel. Once in the button is in the bezel, the screen may be placed in the bezel such that only the center of the button (i.e., not the flanges) is accessible through the screen and the flanges are trapped between the bezel and the screen. The button may be directly coupled to a dome switch mounted on a circuit board located underneath the switch.

## BRIEF DESCRIPTION OF THE DRAWINGS

The above and other features of the present invention, its nature and various advantages will be more apparent upon consideration of the following detailed description, taken in conjunction with the accompanying drawings, and in which:

FIG. **1**A is a schematic view of a grounding spring placed between a bezel and an antenna board of an electronic device in accordance with one embodiment of the invention;

FIG. **1**B is a schematic view of a grounding spring placed between a bezel and an antenna board of an electronic device in accordance with one embodiment of the invention;

FIG. **1**C is a schematic view of the grounding spring of FIG. **1**B in accordance with one embodiment of the invention;

FIG. **2**A is a perspective view of an electronic device having a spring for grounding several components of the electronic device in accordance with one embodiment of the invention;

FIG. **2**B is a schematic view of a spring for simultaneously grounding an antenna board, a bezel and a housing of an electronic device in accordance with on embodiment of this invention;

FIG. **3**A is a schematic view of an illustrative electronic device having a button in accordance with one embodiment of the invention;

FIG. **3**B is a schematic view of a block diagram depicting the electrical connections shown in FIG. **3**A in accordance with one embodiment of the invention;

FIG. **4** is a schematic view of a circuit board with fences used to protect circuit board components in accordance with one embodiment of the invention;

FIG. **5** is a schematic view of fences of the first and second boards of FIG. **4** when they are approached to be engaged in accordance with one embodiment of the invention;

FIG. **6** is a schematic view of the fences of the first and second boards of FIG. **5** when they are engaged in accordance with one embodiment of the invention;

FIG. **7** is a cross-sectional view of the board of FIG. **4** when the board is folded in accordance with one embodiment of the invention;

FIG. **8** is a schematic view of the board of FIG. **4** when the board is folded in accordance with one embodiment of the invention;

FIG. **9** is a schematic view of an electronic device housing in accordance with one embodiment of the invention;

FIG. **10** is an exploded view of an electronic device having an antenna assembly operative to transmit RF waves through the front of the electronic device in accordance with one embodiment of the invention;

FIG. **11** is a schematic view of the electronic device of FIG. **10** when it is partially assembled;

FIG. **12** is a top view of the assembled electronic device of FIG. **10** in accordance with one embodiment of the invention;

FIG. **13** is a schematic view of a bezel in accordance with one embodiment of the invention;

FIG. **14** is an exploded view of the bezel of FIG. **13** with additional components in accordance with one embodiment of the invention;

FIG. **15** is a schematic view of the electronic device of FIG. **14** when the electronic device is assembled in accordance with one embodiment of the invention;

FIGS. **16**, **17** and **18** are schematic views of a bezel of an electronic device in accordance with one embodiment of the invention;

FIG. **19** is a cross-sectional view of an electronic device as a bezel is brought into contact with a housing in accordance with one embodiment of the invention;

FIG. **20** shows a cross-sectional view of the electronic device of FIG. **19** once the bezel engages the housing in accordance with one embodiment of the invention; and

FIG. **21** is an exploded view of an electronic device that includes a home button in accordance with one embodiment of the invention.

## DETAILED DESCRIPTION

FIG. **1**A is a schematic view of an illustrative electronic device in accordance with one embodiment of the invention. Electronic device **100** may include any suitable type of electronic device, including for example a media player such as an iPod® available by Apple Inc., of Cupertino, Calif., a cellular telephone (e.g., an iPhone® available from Apple Inc.), a personal digital assistant, a desktop computer, a laptop computer, gaming console, set-top box, television system or television system component (e.g., a recording device), or any other suitable electronic device. Electronic device **100** may include a case formed from a bezel and a housing, a screen for displaying information to a user, and a user interface (e.g., a button) for providing inputs to the device.

FIG. **1**B is a schematic view of a grounding spring placed between a bezel and an antenna board of an electronic device in accordance with one embodiment of the invention. FIG. **1**C is a schematic view of the grounding spring of FIG. **1**B in accordance with one embodiment of the invention. Electronic device **100** may include bezel **130**, which may act as a ground for the electronic device components of the electronic device. The electronic device may include an antenna for performing wireless communications (e.g., using RF waves, as described in more detail below). To improve the performance of the antenna, it may be desirable to ground antenna board **120**, which may be part of the antenna assembly, to bezel **130**. Antenna board **120** may be ground to bezel **130** using any suitable approach. In some embodiments, a grounding spring may be placed between antenna board **120** and bezel **130**. For example, a spring constructed from electrically conductive material (e.g., a metal) may be inserted between antenna board **120** and bezel **130**.

Grounding spring **110** may be any suitable spring for grounding antenna board **120**. Grounding spring **110** may include elongated strip **112**, which may be operative to deform elastically when it is placed between antenna board **120** and bezel **130**. At each tip of strip **112**, spring **110** may include plate **114** that includes one or more tabs **116**. Each plate **114** may be operative to fit into a structure of antenna board **120** when spring **110** is placed between antenna board **120** and bezel **130** such that tabs **116** extend into slots **122** of antenna board **120**, thus retaining spring **110** in its position.

Spring **110** may be operative to deform elastically to accommodate for bumps **124** and grooves **125** in each of antenna housing **120** and bezel **130**. For example, antenna housing **120** and bezel **130** may include interlocking, wavy, or rippled surfaces to which spring **110** may conform. The redundant contacts due to the wavy nature of the interface, and of the spring in contact with the interface may provide a redundant and more consistent grounding mechanism. The elastic deformation of spring **110** may cause spring **110** to remain retained between antenna board **120** and bezel **130**, even during drop events or other impacts, such that antenna board **120** always remains grounded to bezel **130**.

FIG. **2**A is a perspective view of an electronic device having a spring for grounding several components of the electronic device in accordance with one embodiment of the invention. Electronic device **200** may include housing **210** and bezel **230**, which may be coupled to form the outer shell of electronic device **200**. Housing **210** may include plate **212** and side walls **214**. Plate **212** may form the back surface of electronic device **200**. In some embodiments, plate **212** may define a substantially flat surface (e.g., a flat surface or a surface with a small curvature defined, for example, by a spline). Side walls **214** may extend from plate **212** to form at least a portion of the walls of electronic device **200**. Walls **214** may include a curved surface by which the curvature of housing **210** changes from substantially parallel to plate **212** (e.g., horizontal) to substantially perpendicular to plate **212** (e.g., substantially vertical). In some embodiments, walls **214** may be short (e.g., in the range of 1 to 4 mm) such that only a small amount of the total height of walls **214** consists of material substantially perpendicular to plate **212** (e.g., vertical material).

Housing **210** may be manufactured from any suitable material and using any suitable process. For example, housing **210** may be manufactured from a metal (e.g., aluminum or stainless steel), a composite material, plastic, or any other suitable material. Housing **210** may be manufactured using any suitable approach, including for example forming, forging, extruding, machining, molding, stamping, combinations thereof, or any other suitable manufacturing process.

Housing **210** may include any suitable feature for coupling housing **210** to bezel **230** or for receiving other electronic device components. For example, housing **210** may include aperture **216** for receiving an antenna assembly. As another example, the inner surface of walls **214** may include slots or a component having slots operative to receive snaps of bezel **230** used to couple bezel **230** to housing **210**. As still another

example, housing **210** may include features for supporting a circuit board or battery of the electronic device.

Bezel **230** may include curved outer surface **232** operative to form a flush coupling with walls **214** of housing **210**. Bezel **230** may include a number features on inner surface **234** for receiving electronic device components or for coupling bezel **230** to housing **210**. In some embodiments, bezel **230** may include one or more walls **236** having snaps operative to engage housing **210** when electronic device **200** is assembled, as discussed in more detail below. Walls **236** may be located around the periphery of bezel **230** as a continuous wall or as several discreet walls (e.g., one discreet wall along each side of the bezel). In some embodiments, a portion of walls **236** may include one or more posts **238** operative to receive grounding spring **250**. In some embodiments, bezel **230** may include aperture **240** operative to receive antenna board **260**.

Bezel **230** may be manufactured from any suitable material and using any suitable process. For example, bezel **230** may be manufactured from a metal (e.g., aluminum or stainless steel), a composite material, plastic, or any other suitable material. Bezel **230** may be manufactured using any suitable approach, including for example forming, forging, extruding, machining, molding, stamping, combinations thereof, or any other suitable manufacturing process.

Electronic device **200** may include antenna board **260** operative to support an antenna for wireless communications. For example, antenna board **260** may include an antenna and associated circuitry for conducting communications over an RF communications link, a microwave communications link, an IR communications link, or any other communications link (e.g., using any suitable frequency in the electro-magnetic spectrum).

To improve the antenna performance (e.g., RF 15 performance and RF consistency), antenna board **260** may be grounded simultaneously to bezel **230** and to housing **210** using grounding spring **250**. FIG. **2**B is a schematic view of a spring for simultaneously grounding an antenna board, a bezel and a housing of an electronic device in accordance with on embodiment of this invention. Spring **250** may include base **251** operative to rest on wall **236** of bezel **230**. In some embodiments, base **251** may operative to rest on a portion of wall **236** that curves (e.g., at a corner of bezel **230**), and thus base **251** may be curved to follow the curvature of wall **236**. Base **251** may include several apertures **252** operative to receive posts **238** of bezel **230**. By placing posts **238** in apertures **252**, spring **250** may be easily and consistently mounted to a proper position on walls **236**. Once mounted on walls **236**, spring **250** may ground bezel **230**. In some embodiments, spring **250** may include a double armed flexure (e.g., U-shaped) connected to bezel **230** at a discrete point.

Spring **250** may include several inner tabs **253** extending from base **251** (e.g., six inner tabs **253**). Inner tabs **253** may extend out of the plane of base **251** to follow the curvature and inner side of walls **236**. The length of inner tabs **253** may be selected to reach antenna board **260** when electronic device **200** is assembled. In some embodiments, inner tabs **253** may be a small amount longer than necessary to reach antenna board **260** so that when the electronic device is assembled, tabs **253** are deformed slightly and press against antenna board **260**. This may allow tabs **253** to remain in contact and ground antenna board **260**, even when electronic device **200** is subject to drops or other impacts. The flexure in tabs **253** may allow spring **250** to provide tolerant interface between bezel **230** and antenna board **260**.

Spring **250** may include several outer tabs **254** (e.g., five outer tabs **254**) extending from the opposite side of base **251** as inner tabs **253**. Outer tabs **254** may extend out of the plane of base **251** and follow the curvature and outer side of walls **236**. The thickness of outer tabs **254** and the distance between the outer surface of wall **236** and outer surface **232** of bezel **230** may be selected such that the inner surface of housing **210** is in contact with at least one outer tab **254** when housing **210** is coupled to bezel **230**. For example, outer tabs **254** may be constructed such that outer tabs **254** are maintained between bezel **230** and housing **210** in a press fit.

Spring **250** may be manufactured from any suitable material and using any suitable process. For example, spring **250** may be manufactured from a metal (e.g., copper, gold, or stainless steel), a composite material, flex, or any other suitable material that is electrically conductive. Spring **250** may be manufactured using any suitable approach, including for example forming, forging, machining, molding, stamping, combinations thereof, or any other suitable manufacturing process (e.g., stamping followed by forming).

In some embodiments, the housing may include a button that is electrically coupled to the circuit boards of the electronic device. FIG. **3**A is a schematic view of an illustrative electronic device having a button in accordance with one embodiment of the invention. FIG. **3**B is a schematic view of a block diagram depicting the electrical connections shown in FIG. **3**A in accordance with one embodiment of the invention. Electronic device **300** may include housing **310** and button **320**. Button **320** may be coupled to the circuit boards of the electronic device (not shown) using flex circuit **322**. Flex circuit **322** may include bottom contact pad **323**, which may connect flex circuit **322** to housing **310** (e.g., using an electrically conductive adhesive). Flex circuit **322** may also include top contact pad **324**, which may be coupled to spring **330**, which may in turn be coupled to the main circuit boards of the electronic device (e.g., not shown). Spring **330** and top contact pad **324** may serve as an electrical connection between the circuit board and button **320**. Because housing **310** may be electrically conductive (e.g., metallic) and electrically coupled to the bezel (e.g., also metallic), connecting button **320** (e.g., flex circuit **322**) to housing **310** using bottom contact pad **323** may suffice to ground button **320**. By using housing **310** to ground button **320**, a second connection between top flex pad **324** and the circuit board may not be necessary, which may save significant space in electronic device electronic device **300**.

Because the electronic device may include an antenna for wireless communications (e.g., over an RF communications link), other components of the electronic device, including for example circuit boards, may need to be shielded from RF waves. FIG. **4** is a schematic view of a circuit board with fences used to protect circuit board components in accordance with one embodiment of the invention. Circuit board **400** may include rigid first board **402** and rigid second board **404** coupled by flex tabs **406** and **407**. Flex tabs **406** and **407** may be constructed from a supple material operative to bend to allow first board **402** to be placed over second board **404** to reduce the footprint of circuit board **400**. In some embodiments, at least one of flex tabs **406** and **407** may be electrically coupled to both first board **402** and second board **404** to ensure that the components of each board can communicate with each other. For example, flex tabs **406** and **407** may be part of a flex circuit integrated in circuit board **400**.

The components of each of boards **402** and **404** may be surrounded by fences **410** and **420**, respectively. Fences **410** and **420** may define periphery in which components are placed in boards **402** and **404**. Fences **410** and **420** may be coupled to boards **402** and **404**, respectively, using any suitable approach. For example, fences **410** and **420** may be coupled to boards **402** and **404** using an adhesive, tape, sol-

dering, welding, a mechanical fastener (e.g., a screw), a press fit, or any other suitable approach. In some embodiments, fences **410** and **420** may not be electrically coupled to boards **402** and **404**. Fences **410** and **420** may include walls **412** and **422**, respectively, which may extend substantially perpendicularly from the surface of each of boards **402** and **404**, and have a height substantially equal to or larger than the height of the components (e.g., chips) of each of boards **402** and **404**. Walls **412** and **422** may extend substantially around the entire periphery of each of boards **410** and **420** to act as a shield against RF radiation emanating from the antenna that would reach the components of boards **402** and **404** from the side. Walls **412** and **414** may therefore be constructed from any suitable material operative to substantially prevent RF radiation from passing through (e.g., a metal).

To protect the components of boards **402** and **20 404** from RF radiation coming from above boards **402** and **404** (e.g., over walls **412** and **422**), boards **402** and **404** may be folded over each other such that boards **402** and **404** form the top and bottom shields of the components of boards **402** and **404**. Any suitable approach may be used to hold boards **402** and **404** in their bent position. In some embodiments, fences **410** and **420** may be coupled using snaps, detents, catches, flexures, friction couplings, or any other suitable approach. FIG. **5** is a schematic view of fences of the first and second boards of FIG. **4** when they are approached to be engaged in accordance with one embodiment of the invention. Each of fences **410** and **420** may include several cross-bars **413** and **423**, respectively, for providing additional structure and rigidity to walls **412** and **422** Cross-bars **413** and **423** be in any suitable shape, including for example straight bars, curved bars, or bars with shapes (e.g., S- or J-shapes). In some embodiments, some of cross-bars **413** and **423** may be spaced in fences **410** and **420** such that when fences **410** and **420** are engaged, cross-bars **413** and **423** are aligned. Cross-bars **413** and **423** may have any suitable width, including for example different widths in a particular fence **410** or **420**. In some embodiments, cross-bars **413** and **423** that are aligned may have substantially the same shape and width.

Any suitable approach may be used to engage fences **410** and **420**. For example, fences **410** and **420** may be coupled using an adhesive, hook and fastener material (e.g., Velcro®), a mechanical fastener (e.g., a screw), or mechanical components of fences **410** and **420**. In some embodiments, fence **410** may include several tabs **414** extending beyond portions of wall **412** such that tabs **414** fit around portions of wall **422** when fence **410** engages fence **420**. Fence **410** may include any suitable number of tabs **414** placed at any suitable intervals around the periphery of fence **410**. For example, fence **410** may include nine tabs **414**, four on each of the elongated sides of fence **410**, and one on a short side of fence **410**. Each tab **414** may include a snap **415** extending from tab **414** towards the inside of the perimeter defined by wall **412**. Snaps **415** may include an angled top surface **416** operative to allow walls **422** of fence **420** to slide past tabs **414** when fences **410** and **420** are engaged, and flat surface **417** operative to engage walls **422** to maintain fence **420** against fence **410**.

Snaps **415** may be operative to engage slots **424** of walls **422**. Slots **424** may be constructed in walls **422** such that, when fences **410** and **420** are engaged, snaps **415** are aligned with slots **422**. Walls **422** may include any suitable number of slots **422**, including for example as many slots **422** as snaps **415** in tabs **414**. Slots **424** may take any suitable form, including for example apertures in walls **424**, notches (e.g., that do not extend all the way through walls **424**), protrusions extending from walls **424** operative to engage snaps **415**, or any other suitable form. FIG. **6** is a schematic view of the fences of the first and second boards of FIG. **5** when they are engaged in accordance with one embodiment of the invention. When fence **420** is placed over fence **410**, tabs **414** may be elastically bent outwards to allow walls **422** to pass before returning to its initial shape when snaps **415** engage slots **424**. If slots **424** are apertures, snaps **415** may be visible through walls **422** when fences **410** and **420** are engaged.

FIG. **7** is a cross-sectional view of the board of FIG. **4** when the board is folded in accordance with one embodiment of the invention. FIG. **8** is a schematic view of the board of FIG. **4** when the board is folded in accordance with one embodiment of the invention. To prevent RF radiation from accessing board components by passing in between fences **410** and **420** when fences **410** and **420** are engaged, the positions of snaps **415** and slots **424** (e.g., the height of snaps **415** relative to the height of walls **412**, and the height of slots **424** relative board **404**) may be selected such that fences **410** and **420** are substantially in contact or nearly in contact when engaged. In some embodiments, cross-bars **413** and **423** may be substantially in contact or nearly in contact to further engage fence **410** to fence **420**. For example, cross-bars **413** and **423** may be coupled (e.g., using an adhesive, a mechanical fastener, or components implemented on the cross-bars, such as snaps). As shown in FIG. **7**, cross-bars **413** and **414** may be nearly in contact.

Once boards **402** and **404** are folded over each other and set in place by the engagement of fences **410** and **420**, the circuit board components of boards **402** and **404** may be protected from RF radiation from all directions. Walls **412** and **422** may prevent radiation from reaching the circuit board components from the side, and boards **402** and **404** may prevent radiation from reach the circuit board components from the bottom and top, respectively. Thus, the components of circuit board **400** may be protected from RF radiation without surrounding circuit board **400** with an additional entire box to protect the circuit board components from RF radiation, which may take up a significant amount of space in an electronic device that has only a limited amount of space available. In some embodiments, walls **412** and **422** may form a complete wall from a combination of portions (e.g., castellated alternating high and low portions) combining to form a continuous wall. In some embodiments, walls **412** and **422** may instead or in addition overlap to form a redundant wall when they come together.

Although only one flex tab **406** or **407** may be **30** needed to provide an electrical coupling between boards **402** and **404**, circuit board **400** may include at least two flex tabs **406** and **407** connecting boards **402** and **404** to limit torsion stresses as first board **402** is folded over second board **404**. For example, circuit board **400** may include flex tab **406** at one end boards **402** and **404**, and flex tab **407** at an opposite end of boards **402** and **404**. Flex tabs **406** and **407** may have any suitable width, including different widths (e.g., a smaller width for the flex tab that is not used as a conductive path between boards **402** and **404**). The widths of each of flex tabs **406** and **407** may be selected such that torsion stresses are minimized (e.g., due to the presence of both tabs opposing bending moments) using the least amount of material necessary (e.g., to reduce cost, weight, and space used in the electronic device). In some embodiments, board **400** may include more than two flex tabs, or one large flex tab spanning the entire or substantially the entire length of boards **402** and **404** to provide stiffness against torsion.

FIG. **9** is a schematic view of an electronic device housing in accordance with one embodiment of the invention. Housing **910** may include aperture **914** for receiving the antenna assembly. Aperture **914** may be carved out of a curved surface

of housing **910**, including for example part of rear plate **911** and one or more walls **912** (e.g., from a corner of housing **910**). Aperture **914** may be manufactured using any suitable approach. In some embodiments, aperture **914** may be manufactured as a feature of housing **910** when housing **910** is manufactured (e.g., aperture **914** is included in a stamp used to form housing **910**). In some embodiments, aperture **914** may be cut into housing **910** once its shape been substantially defined.

Aperture **914** may be cut in housing **910** using any suitable approach. In some embodiments, aperture **914** may be created using punching, beam cutting (e.g., using a laser beam or a high pressure water beam), or any other suitable approach. By using beam cutting, aperture **914** may be precisely cut to enhance the fit of antenna cap **930** in aperture **914**. In some embodiments, aperture **914** may be cut such that the walls of aperture **914** are all perpendicular to the surface of housing **910**. When aperture **914** is cut from a curved portion of housing **910** (e.g., the corner of housing **910**), one of the cutting beam or housing **910** may move to ensure that all cuts remain perpendicular to outer surface of housing **910**. For example, the cutting beam may be a laser cutter controlled on 2 axes, and housing **910** may be placed in a fixture operative to move along the last axis. Thus, the cutting beam may perform incisions in housing **910** as if it were a cutting beam controlled on 3 axes.

In some embodiments, the cutting beam may cut aperture **914** in a single, continuous cut. This may allow for a cleaner and more precise overall cut, and a faster manufacturing process. Once the cutting beam cuts aperture **914**, the edge of aperture **914** may be cleaned ultrasonically and/or tumbled to remove any extraneous material. This process may allow for a very tight reveal by which antenna cap **930** may mate tightly with aperture **914** to provide a flush outer surface for the electronic device.

Antenna assembly **920** may include antenna chassis **922** operative to receive an antenna, and antenna cap **930** operative to provide a radio-transparent cosmetic outer surface for antenna assembly **920**. Antenna chassis **922** may be mounted to the inner surface of housing **910** or of the bezel (e.g., bezel **230**, FIG. **2**A) using any suitable approach, including for example an adhesive, a mechanical fastener, a mechanical component built in housing **910** and/or antenna chassis **922** (e.g., a pin), or any other suitable approach. The shape of antenna chassis **922** may be specifically designed to maximize the antenna performance for wireless communications operations. Accordingly, it may be desirable to introduce a separate component to provide the cosmetic cover of chassis **922** to limit the constraints on chassis **922**.

Contrary to antenna chassis **922**, antenna cap **930** may be coupled to housing **910** from the outside of the housing. For example, antenna cap **930** may be manufactured such that the outer periphery **931** of cap **930** matches the periphery of aperture **914** and provides a press fit between cap **930** and aperture **914**. In some embodiments, cap **930** may include several tabs **932** extending from the edge of the inner surface of cap **930**. Tabs **932** may be operative to reach into the inner surface of housing **910** when cap **930** is mounted in aperture **914**. Cap **930** may include any suitable number of tabs, including for example one or two per side of cap **930** (e., 7 total tabs).

To mount cap **930** to housing **910**, cap **930** may be elastically deformed to fit into aperture **914** from the outside of housing **910** (e.g., instead of being placed in aperture **914** from the inside of housing **910**). For example, the outer edges of cap **930** (e.g., around tabs **932**) may be deformed as cap **930** is forced into aperture **914**. Once cap **930** is within the boundaries defined by aperture **914**, cap **930** may return to its initial shape and be flush with housing **910**. Tabs **932** may prevent cap **930** from moving out of aperture **914**, while the contact between curved periphery **931** of cap **930** and the edge of aperture **914** may prevent cap **930** from moving into housing **910**. The thickness and shape of cap **930** may be selected such that, once inserted in aperture **914**, cap **930** is flush with the outer surface of housing **910**. Once cap **930** is inserted in housing **910**, antenna chassis **922** may be mounted in the electronic device.

Antenna cap **930** may be manufactured using any suitable approach. In some embodiments, antenna chassis **922** and cap **930** may be manufactured from plastic, foam, or any other material that may allow radiation to pass through electronic device **900**. In some embodiments, cap **930** may be manufactured using a molding process that includes forced ejection of the cap. For example, because tabs **932** may extend beyond the periphery of cap **930**, cap **930** may be forcibly ejected in a manner that causes tabs **932** to deform elastically. In some embodiments, the manufacturing process may include several ejections. For example, first a moon gate runner may be ejected by an ejector pin to avoid the gate breaking in the sub-insert. Second, a stripper plate and ejector bar may be ejected to create space for the tabs to flex. Third, the ejector bar may be raised to eject the part from the undercut (e.g., while elastically deforming the tabs).

Antenna chassis **922** and antenna cap **930** may be formed from any material suitable for allowing electromagnetic waves (e.g., from the antenna) to pass. For example, antenna chassis **922** may be formed from a porous material that has low density, low dielectric, and low loss tangent, while still providing sufficient stiffness. It may be important to select such materials to enhance the antenna performance because the housing and bezel of the electronic device may be manufactured from metals, which may significantly reduce antenna performance. Suitable materials for antenna chassis **922** may include, for example, low density plastic such as polycarbonate (e.g., which may have a dielectric of 3) and foam (e.g., which may have a dielectric of 1.1). For example, a cast foam piece (e.g., two part epoxy expanding into mold) may provide a strong material that may be attached using means typically used for plastic components (e.g., using mechanical fasteners). To add an antenna to an antenna chassis **922** manufactured from foam, the antenna may be weaved into the chassis. In some embodiments, the antenna may be molded into an antenna chassis **922** manufactured from foam (e.g., place antenna inside foam chassis mold), which may protect the antenna from mechanical damage (e.g., during manufacturing of the electronic device) and from rusting (e.g., insert molding technique).

A foam antenna chassis may be manufactured using any suitable approach. For example, the foam chassis may be cast, machined, stamped, molded, combinations of these, or any other suitable approach. The cast foam may be sufficiently stiff to support mechanical components (e.g., pins or snaps), or receive mechanical fasteners (e.g., a screw).

In some embodiments, RF waves transmitted by the antenna may pass through the back of the electronic device, that is the housing (e.g., through cap **930**), or through the front of the electronic device, that is the bezel and screen. FIG. **10** is an exploded view of an electronic device having an antenna assembly operative to transmit RF waves through the front of the electronic device in accordance with one embodiment of the invention. FIG. **11** is a schematic view of the electronic device of FIG. **10** when it is partially assembled. Electronic device **1000** may include housing **1010**, bezel **1030** and window **1040**. Housing **1010** may include aperture **1014** for

receiving antenna cap **1054**. Electronic device **1000** may include antenna chassis **1052** and antenna board **1053**, which may include an antenna for allowing the electronic device of electronic device **1000** to perform wireless communications operations.

Bezel **1030** may include beam **1032** extending across the width of bezel **1030**. In some embodiments, beam **1032** may extend substantially across the surface of antenna chassis **1052**. Because bezel **1030** may be metallic, and thus prevent RF radiation from the antenna from passing through its surface, beam **1032** may include aperture **1034** through which RF radiation may pass. Aperture **1034** may be any suitable size, including for example substantially the size of antenna chassis **1052**. In addition, aperture **1034** may be positioned in beam **1032** such that aperture **1034** is substantially aligned with the antenna. In some embodiments, antenna board **1053** may also include a window to allow an antenna mounted on antenna chassis **1052** to transmit RF radiation through the top surface of the electronic device.

Window **1040** may be placed over bezel **1030** and beam **1032** such that aperture **1034** is under window **1040**. FIG. **12** is a top view of the assembled electronic device of FIG. **10** in accordance with one embodiment of the invention. Window **1040** may be operative to protect the antenna from impacts or prevent undesired particles from passing through aperture **1034**. To hide aperture **1034** and antenna chassis **1052** from view (e.g., prevent aperture **1034** and antenna chassis **1052** from being visible through window **1040**, as shown in FIG. **12**), a portion of window **1040** may be coated with an opaque layer (e.g., a black layer). RF radiation may continue to pass through the opaque layer, but visible light may be blocked.

The outer periphery of the electronic device may be defined by a bezel coupled to a housing. The bezel may include an opening for receiving a window providing displays to a user. FIG. **13** is a schematic view of a bezel in accordance with one embodiment of the invention. Bezel **1300** may include top end **1302**, bottom end **1304** and sides **1306**. Bezel **1300** may include large aperture **1310** defined by ends **1302** and **1304** and sides **1306** for receiving an electronic device screen. In some embodiments, bezel **1300** may include flange **1311** operative to engage a portion of the electronic device screen. Because of the relative thinness of ends **1302** and **1304** and sides **1306**, bezel **1300** may be strong in bending, but weaker in torsion.

FIG. **14** is an exploded view of the bezel of FIG. **13** with additional components in accordance with one embodiment of the invention. Electronic device **1400** may include bezel **1300**, screen **1410**, and plate **1420** for coupling screen **1410** to bezel **1300**. Screen **1410** may include any suitable screen for providing a display to a user. For example, screen **1410** may include a liquid crystal display (LCD). Screen **1410** may be operative to be placed in aperture **1310** through the back of bezel **1300** such that at least one edge of screen **1400** abuts a portion of bezel **1300** (e.g., to prevent screen **1400** from passing through aperture **1310**).

Plate **1420** may include any suitable plate for supporting screen **1410** in bezel **1300**. For example, plate **1420** may be constructed from plastic, composite or any other suitable material. In some embodiments, plate **1420** may be constructed from a material selected so that plate **1420** is strong in torsion, but weaker in bending. Plate **1420** may be any suitable size, including for example substantially the size of aperture **1310**, substantially the size of screen **1410**, or any other suitable size. Once plate **1420** is coupled to bezel **1300**, screen **1410** may be trapped between plate **1420** and the edges of bezel **1300**. For example, screen **1410** may be trapped between flange **1311** of bezel **1300** on one side (e.g., the side facing out of the electronic device) and plate **142** on the other side (e.g., the side facing in the electronic device), without being directly coupled to either bezel **1300** or plate **1420**. Plate **1420** may be coupled to bezel **1300** using any suitable approach. For example, plate **1420** may be coupled to bezel using an adhesive, tape, a mechanical fastener, a mechanical component (e.g., a pin), or any other suitable approach.

In some embodiments, plate **1420** may be coupled to bezel **1300** in a manner that increases the tortional stiffness of the assembly. For example, plate **1420** may be coupled to bezel **1300** using several mechanical fasteners (e.g., screws). To further increase the stiffness of the assembly, more fasteners than are necessary to couple the components to each other may be used. Bezel **1300** may include several screw taps **1312** operative to receive fasteners. Plate **1420** may include several holes **1422** operative to receive fasteners **1424**. Electronic device **1400** may include any suitable number of fasteners **1424**, including for example eight fasteners **1424** on each side **1306**. When fasteners **1424** are tightened, bezel **1300** and plate **1420** may be coupled and form a box-like structure or frame that is strong both in bending and in torsion. FIG. **15** is a schematic view of the electronic device of FIG. **14** when the electronic device is assembled in accordance with one embodiment of the invention. By coupling plate **1420** to bezel **1300**, the combined structure may increase the stiffness of screen **1410**, and may also increase the overall stiffness of electronic device **1400**. In some embodiments, plate **1420** may include one or more structures operative to receive electronic device components (e.g., electronic device components that are to be mounted on a rigid frame, such as for example a battery, a PCB, or a flex). Thus, the electronic device may include a thin assembly that is strong in both torsion and bending constructed from components that separately are not strong in both torsion and bending.

The electronic device bezel may have several functions. For example, one surface of the bezel may be cosmetic (e.g., the outer surface), while another surface of the bezel may be functional (e.g., the inner surface, to which electronic device components may be mounted). This may allow the electronic device to use a single component for both inner mechanical features and outer aesthetic features. FIGS. **16**, **17** and **18** are schematic views of a bezel of an electronic device in accordance with one embodiment of the invention. Bezel **1600** may include outer surface **1610**, which may be polished, tumbled, or otherwise finished to provide an aesthetically pleasing surface. Bezel **1600** may include inner surface **1620**, which may include several structures **1622** operative to receive one or more electronic device components (e.g., a screen, a plate, a circuit board, or a battery). For example, structures **1622** may include posts, pins, snaps, screw taps, apertures, tabs, or any other suitable structure. In some embodiments, all or substantially all of the components of the electronic device may be mounted to bezel **1600**.

The housing may engage the bezel using any suitable approach. FIG. **19** is a cross-sectional view of an electronic device as a bezel is brought into contact with a housing in accordance with one embodiment of the invention. Electronic device **1900** may include housing **1910** and bezel **1930**. Bezel **1930** may include outer surface **1932** (e.g., the cosmetic surface) and inner wall **1934**. In some embodiments, inner wall **1934** may be recessed from outer surface **1932** to allow bezel **1930** to form a flush fit with housing **1910** when electronic device **1900** is assembled. Inner wall **1934** may include one or more slots **1936** operative to engage housing **1910** to close electronic device **1900**.

Housing **1910** may include one or more ramps **1914** operative to be coupled to inner surface **1912** of housing **1910**,

where each ramp **1914** may include a latch **1916** operative to engage slot **1936** of housing **1930**. By placing ramps **1914** on the inner surface of housing **1910**, the aesthetic appeal of electronic device **1900** may be retained. Ramps **1914** may be coupled to housing **1910** using any suitable approach, including for example an adhesive, tape, hook and fastener material, a mechanical fastener, welding (e.g., spot welding or laser welding), or any other suitable approach. Ramps **1914** may follow the inner surface of housing **1910** such that ramps **1914** are operative to deflect with housing **1910**. Ramps **1914** and slots **1936** may be manufactured such that latches **1916** are aligned with slots **1936** when electronic device **1900** is assembled.

To assemble electronic device **1900**, bezel **1930** may be inserted into housing **1910** such that each latch **1916** may engage a slot **1936**. As inner wall **1934** passes latches **1916** and ramps **1914**, housing **1910** may deform elastically to allow inner wall **1934** to pass. In some embodiments, inner wall **1934** may be too thick or too short to deflect as it passes into housing **1910**. As shown in FIG. **19**, housing **1910** may be progressively deformed to allow inner wall **1934** to pass (e.g., as compared to the position of housing **1910** in FIG. **20**) as it moves over ramp **1914**. Once bezel **1930** has been sufficiently inserted into housing **1910**, latches **1916** may reach slots **1936** and engage bezel **1930**. As latches **1916** engage slots **1936**, housing **1910** may return to its initial, un-deformed position. FIG. **20** shows a cross-sectional view of the electronic device of FIG. **19** once the bezel engages the housing in accordance with one embodiment of the invention. Once engaged, the outer surfaces of bezel **1930** and housing **1910** may be substantially flush.

The electronic device may have any suitable interface for allowing a user to provide instructions to the electronic device. In some embodiments, the electronic device may include a home button. FIG. **21** is an exploded view of an electronic device that includes a home button in accordance with one embodiment of the invention. Electronic device **2100** may include bezel **2130** and screen **2120**. Bezel **2130** may include aperture **2132** operative to receive button **2140**. Aperture **2132** may include center hole **2133** and slots **2134** extending from the periphery of hole **2133**. Button **2140** may include flanges **2142** extending from the periphery of button **2140**. Button **2140** and aperture **2132** may be manufactured such that, when button **2140** is placed in aperture **2132**, the center of button **2140** fits in hole **2133** and flanges **2142** are placed in slots **2134**. By placing flanges **2142** in slots **2134**, button **2140** may be prevented from rotating. In some embodiments, slots **2134** may not extend all the way through the surface of bezel **2130** such that button **2140** may rest on the surface of bezel **2130**.

Button **2140** may be captured in bezel **2130** by placing screen **2120** over bezel **2130**. Screen **2120** may include hole **2122**, which may be substantially the same size as the center of button **2140**. Screen **2120** may not include additional openings aligned with the flanges **2142** such that, once screen **2120** is placed over bezel **2130**, button **2140** is captured between bezel **2130** and glass **2120** by flanges **2142**. In particular, button **2140** may not be directly coupled to any component of electronic device **2100**. This may reduce the number of parts required to support button **2140** as no new components specific to mounting button **2140** are introduced.

Button **2140** may be coupled to switch **2144** (e.g., a dome switch) to provide inputs to the electronic device circuit boards. Switch **2144** may be coupled to board **2146**, which may be located under aperture **2132** of bezel **2130**. In some embodiments, switch **2144** may be directly coupled to button **2144**, without the use of an intermediate component.

The above described embodiments of the invention are presented for purposes of illustration and not of limitation, and the present invention is limited only by the claims which follow.

What is claimed is:

**1**. A metal grounding clip used in a portable computing device to electrically connect at least one electrical component to chassis ground, the metal grounding clip comprising:

a base portion having a curved geometry and comprising an aperture operative to receive an electrically conductive fastener for both mechanically constraining the grounding clip and electrically coupling the grounding clip to the chassis ground; and

electrically conductive links integrally formed with the base portion, comprising:

inner links extending from a first side of the base portion, and configured to electrically couple the grounding clip to the electrical component, and

outer links extending from a second side of the base portion, the second side of the base being opposite the first side of the base, each of the outer links being configured to electrically couple the base portion with the chassis ground,

wherein when the metal grounding clip is secured by the electrically conductive fastener to the chassis ground the metal grounding clip completes an electrically conductive pathway between the at least one electrical component and chassis ground.

**2**. The metal grounding clip as recited in claim **1**, wherein the at least one electrical component is an antenna.

**3**. The metal grounding clip as recited in claim **1**, wherein the inner links deforms against the electrical component when installed within the portable computing device, the deformation of the inner links providing a force between the inner links and the electrical component that keeps the inner links in continuous contact with the electrical component.

**4**. The metal grounding clip as recited in claim **1**, wherein each of the electrically conductive inner links disposed on the first side of the base portion is configured to contact a portion of the antenna board defining a slot.

**5**. The metal grounding clip as recited in claim **1**, wherein the curved geometry of the metal grounding clip is suited for positioning the metal grounding clip along a corner portion of the portable computing device.

**6**. A grounding spring, comprising:

a base having a curved geometry and configured to be positioned along a wall portion of a conductive housing of an electronic device, the base including an aperture for receiving a fastening apparatus for securing the base to a conductive housing of the electronic device;

inner arms extending from a first side of the base, the first arm configured to be in electrical contact with an antenna disposed within the electronic device; and

outer arms extending from a second side of the base, the second side of the base opposite the first side of the base, the outer arms configured to be in electrical contact with the conductive housing of the electronic device.

**7**. The grounding spring as recited in claim **6**, wherein the inner arms of the grounding spring is configured to deformably engage the antenna when the electronic device is assembled.

**8**. The grounding spring as recited in claim **7**, wherein the inner arms and outer arms are integrally formed with the base and wherein the grounding spring is constructed of a single conductive material.

**9**. The grounding spring as recited in claim **8**, wherein the grounding spring is made from a single material selected from the group consisting of stainless steel and aluminum.

**10**. The grounding spring as recited in claim **9**, wherein the outer arms extending from the second side of the base comprise tabs.

**11**. An electronic device, comprising:

an antenna assembly;

a conductive housing; and

a grounding spring, comprising:

a base portion having a curved geometry and defining an opening operative to receive an electrically conductive fastener for both mechanically constraining the grounding spring and electrically coupling the grounding spring to the conductive housing, and

electrically conductive arms integrally formed with the base portion, comprising:

inner electrically conductive arms extending from a first side of the base portion and electrically coupling the grounding spring to the antenna assembly, and

outer electrically conductive arms extending from a second side of the base portion opposite the first side, each of the outer electrically conductive arms electrically coupling the grounding spring to the conductive housing.

**12**. The electronic device as recited in claim **11**, wherein the grounding spring is disposed along a corner portion of the conductive housing.

**13**. The electronic device as recited in claim **11**, wherein the electrically conductive fastener comprises a protrusion extending from a top surface of the conductive housing.

**14**. The electronic device as recited in claim **13**, wherein the grounding spring is secured in place by cooperation between the protrusion and an interior surface of the electronic device.

* * * * *