おり、外装体の表面には前記各個別コンデンサに接続された配線層の位置を表示する標識が設けられていることが好ましい。

【００２１】

これによれば、所望の個別コンデンサを無効とするための個別コンデンサの切取りや、配線層の切断を容易に行える。

【００２２】

また、一般的に、ＩＣカードにおけるアンテナの位置や大きさは、ＩＣカードの種類ごとに異なる場合が多い。したがって、ＩＣカード用充電装置のアンテナが、外装体の主面の面積を占有する大きさが大きくなればなるほど、ＩＣカードのアンテナと、ＩＣカード用充電装置のアンテナと、を対向配置させやすくなり、ＩＣカードを効率よく充電させることが可能となる。

【００２３】

そこで、本発明のＩＣカード用充電装置において、外装体が板状であり、コイル状のアンテナは、外装体内において外装体の主面に交差する軸回りに巻き回されていることが好ましい。

【００２４】

これによれば、アンテナのコイルの径を板の主面と垂直な方向に大きく広げることができるため、外装体が小さくてもアンテナのコイルの径を十分に大きくできる。

【００２５】

ここで、ＩＣカードのアンテナとＩＣカード用充電装置のアンテナとを十分効率よく対向させるには、ＩＣカード用充電装置のアンテナが、外装体の主面に垂直な方向から見たときに外装体の面積の１／４以上を占有する大きさであることが好ましく、外装体の面積の１／２以上を占有する大きさであることがより好ましい。

【００２６】

加えて、ＩＣカード用充電装置が板状であると、パスケース等に収容することが容易なので携帯性が向上する。さらに、この板状のＩＣカード用充電装置は、板状のＩＣカードと重ね合わせやすいため、充電の操作が容易に行える。

【００２７】

さらに、太陽電池を更に備え、電力源の電池やキャパシタは太陽電池によって生じた電力により充電されることが好ましく、これにより、省エネルギー化が図られる。

【００２８】

本発明に係るパスケースは、ＩＣカード用充電装置、ＩＣカード用充電装置を収容する第一収容部、及び、充電されるべきＩＣカードをＩＣカード用充電装置と対向するように収容可能な第二収容部を備える。このＩＣカード用充電装置は、上述のように、電力源と、電力源からの電力の供給を受けて交流信号を発生する発振器と、発振器からの交流信号を受けて電磁波を発生するコイル状のアンテナと、電力源、発振器、及び、アンテナを収容する外装体と、を有している。

【００２９】

このようなパスケースによれば、ＩＣカードをパスケースに入れたまま、ＩＣカード用充電装置によってＩＣカードの充電操作が行えるので極めて利便性が高い。

【発明の効果】

【００３０】

本発明によれば、ＩＣカードのユーザにとって利便性の高いＩＣカード用充電装置及びこれを用いたパスケースを提供できる。

【発明を実施するための最良の形態】

【００３１】

以下、図面を参照しながら本発明の好適な実施形態について詳細に説明する。なお、以下の説明では、同一又は相当部分には同一符号を付し、重複する説明は省略する。

（第一実施形態）

図１は本発明の第一実施形態に係るＩＣカード用充電装置２０、及び、このＩＣカード

用充電装置２０により充電されるＩＣカード５０を示すブロック図である。

【００３２】

（ＩＣカード）

まず、本実施形態に係るＩＣカード５０の機能から説明する。このＩＣカード５０は、情報処理部５４及びメモリ５６を有するＩＣ部５２、蓄電素子５８、表示素子６０、過充電防止部６２、アンテナ６４、及び、外装体６８を備えている。

【００３３】

ＩＣ部５２は、情報処理部５４及びメモリ５６を有する集積回路（ＩＣ）である。情報処理部５４としては、例えば、ＣＰＵ等の演算装置が挙げられる。ここで情報処理部５４が行う情報の処理とは、具体的には、アンテナ６４を介して受信したリーダライタ１０からの信号を復調して情報を得、これに基づいてメモリ５６内から情報を読み出したりメモリ５６内の情報を書き換えたり、読み出した情報を変調してアンテナ６４を介してリーダライタ１０に送信させたりする処理や、必要に応じてメモリ５６内の情報を表示素子６０に表示させたりする処理を含む。

【００３４】

メモリ５６は、情報処理部５４にバスを通じて接続されており、情報処理部５４で処理された情報の記録等を行う。メモリ５６としては、例えば、ＥＥＰＲＯＭ等の不揮発性のメモリを使用できる。

【００３５】

アンテナ６４は、ループコイルであり、情報処理部５４から変調された信号を受けて所定の電磁波を発生する一方、リーダライタ１０やＩＣカード用充電装置２０からの電磁波を受信し所定の起電力の信号を発生し、情報処理部５４や蓄電素子５８に送信する。

【００３６】

過充電防止部６２は、アンテナ６４からの信号を整流して直流に変換し、この直流電力を蓄電素子５８の蓄電量に応じて適宜蓄電素子５８に充電する。

【００３７】

蓄電素子５８は、過充電防止部６２によって充電される一方、必要に応じて電力を発生してＩＣ部５２や表示素子６０に対して電力を供給する。このような蓄電素子５８としては、リチウムイオン電池等の二次電池や電気二重層キャパシタ、アルミ電解コンデンサ、フィルムコンデンサ、セラミック積層コンデンサ等を利用できる。

【００３８】

表示素子６０は、蓄電素子５８の電力により駆動され、情報処理部５４の指示にしたがって、メモリ５６の記憶情報等を表示する。表示素子６０としては、例えば、液晶パネル等を利用できる。

【００３９】

そして、外装体６８は、このようなＩＣ部５２、アンテナ６４、過充電防止部６２、蓄電素子５８、表示素子６０を収容する。

【００４０】

（ＩＣカード用充電装置）

続いて、本実施形態に係るＩＣカード用充電装置２０の機能について説明する。このＩＣカード用充電装置２０は、二次電池（電池）２４と、太陽電池２６と、スイッチ２８と、発振器３０と、アンテナ３２と、外装体３８と、を備えている。

【００４１】

二次電池２４は充電可能な電池であり、発生する電力を、スイッチ２８を介して発振器３０に供給する。二次電池２４としては、例えば、リチウムイオン電池、ニッケル水素電池等を使用できる。ここで、二次電池２４に代えて、電気二重層キャパシタやセラミック積層コンデンサ等の大容量キャパシタを用いても同様の動作が可能である。

【００４２】

太陽電池２６は、太陽光線の放射エネルギーを直接電気エネルギーに変換する素子である。太陽電池２６により発生した電力は二次電池２４に供給され、二次電池２４の充電が

行われる。太陽電池２６としては、例えば、多結晶シリコン太陽電池等が利用できる。

【００４３】

スイッチ２８は、二次電池２４から発振器３０への電力の供給／遮断を制御するためのスイッチである。このスイッチ２８は、通常、ＩＣカード用充電装置２０のユーザにより操作される。

【００４４】

発振器３０は、二次電池２４からの電力を受けて、所定の周波数の交流信号を発生する。この発振器３０は、ユーザの所望に応じて発振器３０が発生する交流信号の周波数を変更させる周波数変更部（周波数変更手段）３４を有している。

【００４５】

アンテナ３２は、ループコイルであり、発振器３０からの交流信号を受けて所定の周波数の電磁波を発生する。

【００４６】

外装体３８は、これら二次電池２４、太陽電池２６、スイッチ２８、発振器３０、及び、アンテナ３２を収容する。ＩＣカード用充電装置２０、ＩＣカード５０の機械的構造については、後述する。

【００４７】

続いて、本実施形態に係るＩＣカード用充電装置２０の概略回路図を図２に示す。本実施形態の発振器３０は、詳細な回路の図示は省略するが、ノード４８ａ及びノード４８ｂから供給される直流の電力によって駆動され、周波数ｆの交流信号を発生してノード４８ｃ及びノード４８ｄを介して外部に出力する発振回路である。

【００４８】

発振器３０は、コイル４２及び可変コンデンサ４４（周波数変更部３４）により構成されるＬＣ共振回路４６と、このＬＣ共振回路４６によって選択された周波数ｆの信号を正帰還してトランジスタ等によって増幅させることによって周波数ｆの発振を起こさせる回路部４０と、を備えている。

【００４９】

このような発振器３０としては、具体的には、例えば、ハートレー回路や、コルピッツ回路を使用できる。

【００５０】

ここで、発振器３０が発生する周波数ｆの概略値は、コイル４２のインダンクタンスをＬ、可変コンデンサ４４のキャパシタンスをＣとし、例えば、ＬＣ共振回路４６はコイル４２及び可変コンデンサ４４が並列接続されたものとすると、

【数１】

$$f = \frac{1}{2\pi\sqrt{CL}}$$

となる。したがって、可変コンデンサ４４のキャパシタンスを変化させることにより、所望の周波数での発振が可能となる。

【００５１】

ここで、このＬＣ共振回路４６は、コイル４２及び可変コンデンサ４４の並列回路に限られず直列回路等でもよい。また、可変コンデンサ４４に代えてキャパシタンスが固定されたコンデンサを使用し、コイル４２に代えてインダクタンスを調節可能な可変コイルを周波数変更部３４として採用しても良い。さらに、可変コンデンサ４４を採用すると共に可変コイルを採用しても良い。

【００５２】

このような回路部４０のノード４８ａには、スイッチ２８を介して、二次電池２４の正極及び太陽電池２６の正極が接続されている。一方、回路部４０のノード４８ｂには、二次電池２４及び太陽電池２６の負極が接続されており、ノード４８ａ及びノード４８ｂを

介して回路部４０に電力が供給される。

さらに、回路部４０のノード４８ｃ及びノード４８ｄにはアンテナ３２の両端が接続され、回路部４０からの所定の周波数ｆの交流信号がアンテナ３２に供給される。

【００５３】

続いて、本実施形態のＩＣカード用充電装置２０及びＩＣカード５０の構造について図３を参照して説明する。

【００５４】

ＩＣカード用充電装置２０において、外装体３８は、矩形の薄型の板状をなしており、互いに対向する主面３８ａ、３８ｂ、及び、側面３８ｃを有している。外装体３８の材質としては、ＰＶＣ、ポリエステル、ＰＥＴ等の樹脂を利用できる。このような外装体３８の大きさは、例えば、縦５４ｍｍ×横８６ｍｍ×厚み３ｍｍである。

【００５５】

そして、アンテナ３２、二次電池２４、可変コンデンサ４４（図２参照）としてのダイヤル回転型可変コンデンサ４４ａ、回路部４０及びコイル４２（図２参照）が一つにまとめられた発振チップ３１、太陽電池２６、スイッチ２８（図２参照）としての押下スイッチ２８ａが、外装体３８内に収容されている。

【００５６】

アンテナ３２はループコイル形状をなし、外装体３８内において外装体３８の主面３８ａに直交する軸周りに複数回巻き回されている。このアンテナ３２は、外装体３８の主面３８ａに垂直な方向から見たときに外装体３８の主面３８ａの面積の１／２以上を占めている。

【００５７】

二次電池２４は、薄型のボタン型形状をなしている。また、太陽電池２６の受光面は外装体３８の主面３８ａ上に露出されている。さらに、押下スイッチ２８ａは、外装体３８の主面３８ａ上に露出するように配置されている。

【００５８】

ダイヤル回転型可変コンデンサ４４ａは、キャパシタンスを変化させるための円盤状の回転ダイヤル７７ａを有しており、回転ダイヤル７７ａの回転によって電極（不図示）の対向部分の面積を変化させてキャパシタンスを変化させるものである。この回転ダイヤル７７ａの表面には、変化するキャパシタンスに対応した目盛り記号７７ｂが円周方向に表示されている。そして、ダイヤル回転型可変コンデンサ４４ａは、この回転ダイヤル７７ａの一部が外装体３８の側面３８ｃから外部に突出するように、外装体３８内に固定されている。そして、ユーザが、回転ダイヤル７７ａの目盛り記号７７ｂを確認しつつこの回転ダイヤル７７ａを所望の位置に回転させることにより、ダイヤル回転型可変コンデンサ４４ａのキャパシタンスを所望の値に調節でき、アンテナ３２から発振される電磁波の周波数を調節することができる。具体的な周波数の調節範囲は、例えば、４～１４ＭＨｚである。

【００５９】

一方、ＩＣカード５０の外装体６８も、ＩＣカード用充電装置２０と同様の樹脂製の外装体６８を有し、アンテナ６４、ＩＣ部５２、蓄電素子５８、過充電防止部６２、及び、表示素子６０が、矩形板状の外装体６８内に収容されている。表示素子６０の表示面は、外装体６８から露出している。また、アンテナ６４は、外装体６８内において外装体６８の主面６８ａに垂直な軸回りに巻き回されている。ＩＣカードの大きさは、縦５４ｍｍ×横８５．７ｍｍ×厚み０．７６ｍｍ程度であり、ＩＣカード用充電装置２０とほぼ同様である。

【００６０】

このようなＩＣカード用充電装置２０やＩＣカード５０は、例えば、所定の樹脂製等のシート上に各部品をあらかじめ貼り込んでおき、この上にさらにシートを載せて熱圧着する方法や、各部品が張り込まれたシートを型内に載置し、この型内に樹脂を埋め込む方法等により容易に製造できる。

【００６１】
続いて、本実施形態のＩＣカード用充電装置２０の作用について説明する。
【００６２】
まず、ＩＣカード５０の蓄電素子５８を充電したいユーザは、ＩＣカード用充電装置２０の回転ダイヤル７７ａを回転させ、ＩＣカード用充電装置２０から出力される電磁波の周波数を、充電されるべきＩＣカード５０の電力受信用の周波数に合わせておく。
【００６３】
続いて、ＩＣカード用充電装置２０の主面３８ｂとＩＣカード５０の主面６８ａとを重ね合わせ、その状態で、ＩＣカード用充電装置２０の押下スイッチ２８ａを押下する。そうすると、発振器３０に対して二次電池２４から電力が供給されて発振が起こり、アンテナ３２から所望の周波数ｆの電磁波が出力される。
【００６４】
このようにして出力された電磁波は、ＩＣカード５０のアンテナ６４で受信されて電力に変換され、過充電防止部６２を介して蓄電素子５８に蓄えられる。このような充電は、ユーザが押下スイッチ２８ａを押下している限り継続する。そして、押下をやめて充電を完了した後、ユーザは、このようにして蓄電素子５８に蓄えられた電力を用いて表示素子６０に情報を表示させることができる。
【００６５】
このような本実施形態のＩＣカード用充電装置２０によれば、電力を発生する二次電池２４を備えているので、充電の際に外部からの電源の供給を必要としない。したがって、このＩＣカード用充電装置２０をユーザが携帯することにより、ユーザが所望する時・場所においてＩＣカード５０の蓄電素子５８を手軽に充電することができる。さらに、二次電池２４として、ボタン型のものを利用しているので、ＩＣカード用充電装置２０が小型軽量となってＩＣカード用充電装置２０の携帯性がさらに良くなる。さらに、二次電池２４として、小型でありながら容量が大きいリチウムイオン電池やニッケル水素電池を採用しているので、長時間、多数回の利用が可能である。
【００６６】
また、二次電池２４から発振器３０への電力の供給／遮断を制御することができる押下スイッチ２８ａを備えているので、ユーザが所望する時に所望の時間だけ充電操作ができる。したがって、無駄な電力の消費を抑制できる。
【００６７】
また、ＩＣカード５０の規格は現在複数存在し、ＩＣカード５０に充電するために必要とされる電磁波の周波数は、ＩＣカード５０の種類毎に異なる場合が多い。ところが、本実施形態においては、周波数変更部３４を有しているので、充電用の電磁波の周波数を変えることにより多種のＩＣカード５０にそれぞれ充電することができ、ＩＣカード用充電装置２０の汎用性が高い。
【００６８】
具体的には、発振器３０が、コイル４２及びダイヤル回転型可変コンデンサ４４ａを含むＬＣ共振回路４６を有しているので、可変コンデンサ４４のキャパシタンスＣを変更することによりＬＣ共振回路４６の共振周波数が変更可能となっている。このため、アンテナ３２から発生する電磁波の周波数を極めて容易に変更できる。
【００６９】
また、本実施形態では、外装体３８が板状であり、コイル状のアンテナ３２は外装体３８の主面３８ａに垂直な軸回りに巻き回されている。このため、アンテナ３２のコイルの径を、外装体３８の厚みと垂直な面内方向に大きく広げることができるため、薄型の板状の外装体３８でもアンテナ３２のコイルの径を十分に大きくできる。したがって、ＩＣカード５０におけるアンテナ６４の位置や大きさの影響をそれほど受けることなくＩＣカード５０の充電が可能となる。
【００７０】
特に、アンテナ３２は、外装体３８の主面３８ａに垂直な方向から見たときにこの主面

３８ａの面積の１／２以上を占有する大きさである。したがって、ＩＣカード５０におけるアンテナ６４の位置がさまざまな場所にあっても、少なくとも、ＩＣカード５０の表裏を一回裏返す、又は、ＩＣカード５０を主面６８ａと垂直な軸周りに１８０°回転させれば、ほぼ確実に、アンテナ３２とアンテナ６４とを対向させることができ、充電を確実に行える。

【００７１】

なお、アンテナ３２の大きさが、主面３８ａの面積の１／４以上あれば、少なくとも、ＩＣカード５０を一回裏返し、かつ、主面６８ａと垂直な軸周りに１８０°回転させれば、ほぼ確実に、アンテナ３２とアンテナ６４とを対向させることができる。もちろん、ＩＣカード５０のアンテナ３２が主面６８ａの面積のほとんどを占有する場合等には、アンテナ３２の大きさは、特に問題とはならない。

【００７２】

また、ＩＣカード用充電装置２０の外装体３８が板状であるので、パスケース等に収容することが容易なので携帯性が向上する。また、ＩＣカード用充電装置２０の外装体３８が板状であると、板状であるＩＣカード５０と重ね合わせやすいため、充電の操作が容易に行える。特に本実施形態では、ＩＣカード用充電装置２０とＩＣカード５０とが略同サイズの矩形板状であるので、より重ねあわせやすい。

【００７３】

さらに、太陽電池２６を備えているので、ＩＣカード用充電装置２０を太陽にかざすことにより、ＩＣカード用充電装置２０の二次電池２４を予め充電しておくことができるので省エネルギー製に優れ、さらに、二次電池２４の充電が簡易に行えるので利便性が極めて高い。

【００７４】

（第二実施形態）

続いて、第二実施形態に係るＩＣカード用充電装置１２０について、図４を参照して説明する。本実施形態に係るＩＣカード用充電装置１２０が第一実施形態に係るＩＣカード用充電装置２０と異なる点は、ダイヤル回転型可変コンデンサ４４ａに代えて、スライド型可変コンデンサ４４ｂを備えている点である。このスライド型可変コンデンサ４４ｂは、外装体３８の端面３８ｄに沿って移動するスライド式のツマミ７８ａを有し、このツマミ７８ａをスライドさせると電極間の対向面積が変わりキャパシタンスを変更できる。したがって、アンテナ６４から送信される電磁波の周波数を変更できる。

【００７５】

ここで、スライド式のツマミ７８ａには、外装体３８の主面３８ａの一部を指示する指示針７８ｂが設けられている。また、外装体３８の主面３８ａには、指示針７８ｂによって指示される部分に、各指示位置に対応する周波数を示す目盛り記号７９が記されている。したがって、ユーザが、ツマミ７８ａの指示針７８ｂが所望の目盛り記号７９に合致するようにツマミ７８ａをスライドさせることによって、スライド型可変コンデンサ４４ｂを所望のキャパシタンスとすることができ、ＩＣカード用充電装置１２０から所望の周波数の電磁波を出力させることができる。上記以外の作用効果は、第一実施形態と同様である。

【００７６】

（第三実施形態）

続いて、第三実施形態に係るＩＣカード用充電装置２２０について図５（ａ）及び図５（ｂ）を参照して説明する。本実施形態に係るＩＣカード用充電装置２２０が第一実施形態に係るＩＣカード用充電装置２０と異なる点は、ダイヤル回転型可変コンデンサ４４ａに代えて、周波数変更部３４として、複数の個別コンデンサ１３０を梯子状に直列に接続した集合コンデンサ４４ｃを備える点である。

【００７７】

各個別コンデンサ１３０は、それぞれ薄い樹脂フィルムを電極（金属膜）で挟んだ構造である（図示省略）。これら個別コンデンサ１３０は、外装体３８内において外装体３８

の主面３８ａに沿って、発振チップ３１から離れる方向に、かつ、端面３８ｄと平行に並設されている。また、発振チップ３１からは、外装体３８の主面３８ａに沿って、併設された個別コンデンサ１３０を挟むように一対の共通ライン１３２，１３４が外装体３８内を伸びている。

【００７８】

各個別コンデンサ１３０の一方の電極は、個別ライン１３１によって共通ライン１３２に接続されている。一方、各個別コンデンサ１３０の他方の電極は、個別ライン１３３によって共通ライン１３４に接続されている。そして、共通ライン１３２，１３４、及び、個別ライン１３１，１３３が配線層１３５を構成しており、個別コンデンサ１３０、及び、配線層１３５が集合コンデンサ４４ｃを構成している。

【００７９】

そして、外装体３８の主面３８ａにおいて、個別コンデンサ１３０と個別コンデンサ１３０との中間点に対応する位置には、個別コンデンサ１３０が並ぶ方向と直交する方向に縦線（標識）１３６がそれぞれ平行に描かれている。これらの縦線１３６は、それぞれ各共通ライン１３２、１３４を横切るように伸びている。縦線１３６の一端は、それぞれ外装体３８の端面３８ｄまで達している一方、各縦線１３６の他端は、共通ライン１３２，１３４を挟むように端面３８ｄと平行に描かれた横線１３７と接続されている。

【００８０】

そして、ユーザが周波数ｆを変更したい場合には、いずれかの縦線１３６に沿ってＩＣカード用充電装置２０を切断し、さらに、横線１３７に沿ってこの縦線１３６までＩＣカード用充電装置２０を切断することにより、図５（ｂ）に示すように、個別コンデンサ１３０を含む切片２２０ａ取り除く。これにより、この縦線１３６よりも発振チップ３１から遠い側の個別コンデンサ１３０を無効化することができ、集合コンデンサ４４ｃのキャパシタンスを変更することができ、したがって、発生する電磁波の周波数を変更できる。上記以外の作用効果は、第一実施形態と同様である。

【００８１】

（第四実施形態）

続いて、第四実施形態に係るＩＣカード用充電装置について、図６を参照して説明する。第四実施形態に係るＩＣカード用充電装置３２０が第三実施形態と異なる点は、縦線１３６、横線１３７に代えて、第三実施形態において縦線１３６が共通ライン１３４を横切る位置に、共通ライン１３４の位置を示す丸印（標識）１３８が主面３８ａの表面に設けられている点である。

【００８２】

本実施形態においては、針（ピン）等によって、所望の丸印１３８の部分に穴をあけることにより、共通ライン１３４を切断して所望の個別コンデンサ１３０を無効化することができ、これにより、集合コンデンサ４４ｃのキャパシタンスを変更でき、したがって第三実施形態と同様に電磁波の周波数を変更できる。

【００８３】

（第五実施形態）

続いて、本発明に係るパスケースについて説明する。

【００８４】

このパスケース４００は、上部シート４０２、中間シート４０４、及び、下部シート４０６を有している。これら上部シート４０２、中間シート４０４、及び、下部シート４０６は、互いに同サイズの矩形状をなし、それぞれ樹脂あるいは革等の可撓性材料により形成されている。

【００８５】

中間シート４０４と上部シート４０２との間には第一実施形態に係るＩＣカード用充電装置２０が挟まれており、ＩＣカード用充電装置２０を挟んだ状態で、中間シート４０４及び上部シート４０２の四辺がヒートシールされている。ここで、中間シート４０４と上部シート４０２との間が第一収容部４１０とされている。

【００８６】
上部シート４０２においてＩＣカード用充電装置２０の太陽電池２６及び押下スイッチ２８ａと対面する部分には開口が形成されている。また、上部シート４０２において、ダイヤル回転型可変コンデンサ４４ａのダイヤルの部分と対面する部分も開口されている。したがって、ＩＣカード用充電装置２０を収容したまま、押下スイッチ２８ａの操作、太陽電池による充電、及び、周波数ｆの調整が可能となっている。
【００８７】
中間シート４０４の下には、下部シート４０６が配置され、下部シート４０６の長手方向の一端側（図示手前側）を除く三辺が中間シート４０４に対してヒートシールされている。そして、ヒートシールされていない部分から、中間シート４０４と下部シート４０６との間にＩＣカード５０を挿入可能となっている。ここで、中間シート４０４と下部シート４０６との間が第二収容部４２０とされている。ＩＣカード５０は、パスケース４００内で、ＩＣカード用充電装置２０と対向することとなる。
【００８８】
このようなパスケース４００によれば、ＩＣカード５０をパスケース４００に入れたまま、ＩＣカード用充電装置２０によってＩＣカード５０の充電操作が行えるので極めて利便性が高い。
【００８９】
また、ＩＣカード用充電装置２０は樹脂製の薄型の板状の外装体３８を有しているので、ＩＣカード５０をこのパスケース４００に入れたままリーダライタにかざしても、リーダライタからＩＣカード５０に到達する電磁波や、ＩＣカード５０からリーダライタに送信される電波を遮ったりせず、ＩＣカードの動作が可能である。ここで、パスケース４００において、第一実施形態のＩＣカード用充電装置２０に代えて、第二～第四実施形態に係るＩＣカード用充電装置１２０，２２０，３２０を利用しても良い。
【００９０】
なお、本発明は上記実施形態には限定されず、さまざまな変形態様が可能である。
【００９１】
例えば、上記実施形態では、電力源として二次電池を用いたが、化学反応により電気エネルギーを発生する電池であれば二次電池に限られず、例えば、アルカリ電池等の一次電池、燃料電池等でも構わない。また、電力源として、電池に代えて、電気二重層キャパシタや、セラミック積層キャパシタ等、化学反応によらずに蓄えた電気エネルギーを放出するキャパシタを用いても良い。もちろん、電力源として、電池及びキャパシタを両方備えていても良い。
【００９２】
また、上記実施形態では、ＬＣ共振回路を用いた発振器を採用しているが、もちろん、これ以外の、例えば、ＣＲ発信回路等の他の発振器を用いても動作は可能である。
【図面の簡単な説明】
【００９３】
【図１】第一実施形態に係るＩＣカード及びＩＣカード用充電装置のブロック図である。
【図２】図１のＩＣカード用充電装置の概略回路図である。
【図３】図１のＩＣカード及びＩＣカード用充電装置の概略斜視図である。
【図４】第二実施形態に係るＩＣカード用充電装置を示す概略斜視図である。
【図５】第三実施形態に係るＩＣカード用充電装置を示す概略斜視図である。
【図６】第四実施形態に係るＩＣカード用充電装置を示す概略斜視図である。
【図７】第五実施形態に係るパスケースを示す概略斜視図である。
【符号の説明】
【００９４】
２４…二次電池（電池）、２６…太陽電池、２８…スイッチ、３０…発振器、３２…アンテナ、３４…周波数変更部（周波数変更手段）、３８…外装体、４２…コイル、４４ａ…ダイヤル回転型可変コンデンサ（コンデンサ）、４４ｂ…スライド型可変コンデンサ（

コンデンサ）、４４ｃ…集合コンデンサ（コンデンサ）、４６…ＬＣ共振回路、５０…ＩＣカード、１３０…個別コンデンサ、１３２，１３４…配線層、１３６…点線（標識）、１３８…丸印（標識）、２０，１２０，２２０，３２０…ＩＣカード用充電装置、４００…パスケース、４１０…第一収容部、４２０…第二収容部。

【図１】

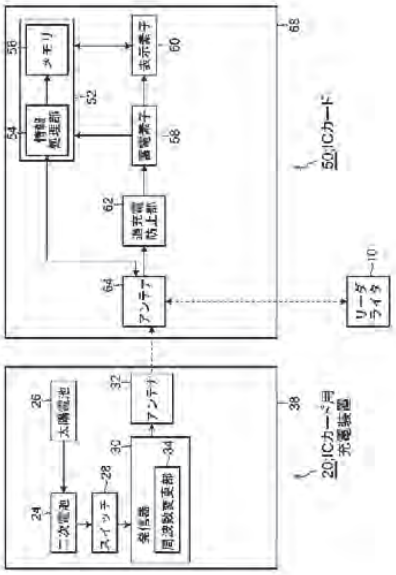


【図２】

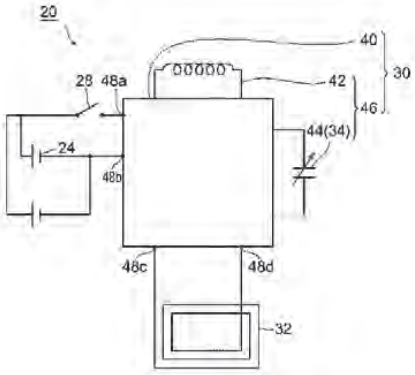

【図３】

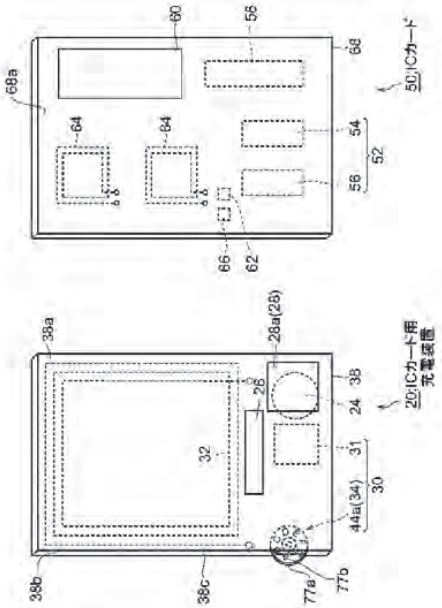
60
56
68
50:ICカード
68a
64
64
54
52
56
66
62
38a
28a(28)
38
26
24
20:ICカード用充電装置
32
31
30
44a(34)
38b
38c
77a
77b

【図４】

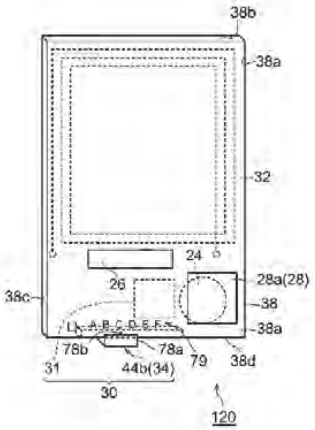
38b
38a
32
24
26
28a(28)
38c
38
38a
78b
78a
79
38d
31
44b(34)
30
120

【図５】

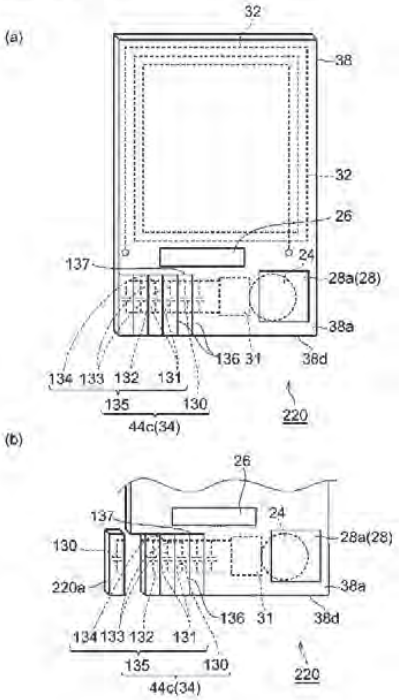
(a)
32
38
32
26
24
137
28a(28)
38a
136 31
38d
134 133 132 131
135
130
44c(34)
220
(b)
26
24
137
28a(28)
130
220a
38a
136 31
38d
134 133 132 131
135
130
44c(34)
220

【図６】

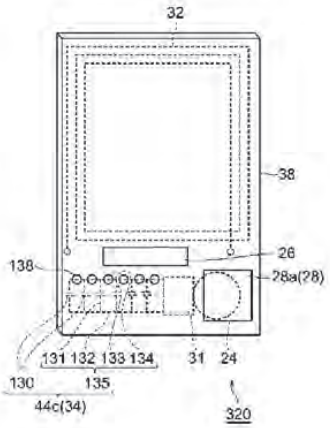
32
38
26
138
28a(28)
131 132 133 134
31
24
130
135
44c(34)
320

【図７】

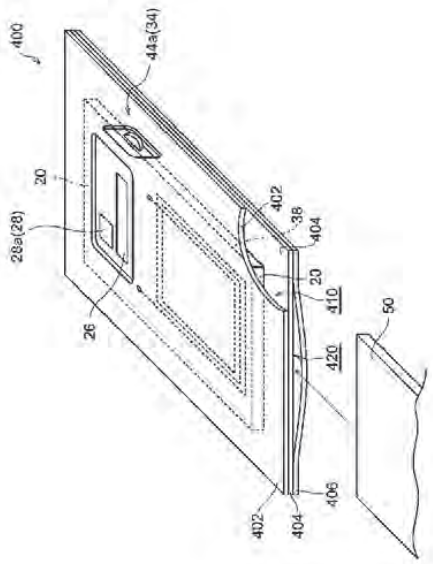

フロントページの続き

| (51)Int.Cl.⁷ | F I | テーマコード（参考） |
|---|---|---|
| H02J 17/00 | G06K 19/00 J | |

Fターム(参考) 2C005 MB10 NA09 QA02 QA03 QA05 QB01 TA22
5B035 BA09
5G003 AA04 AA06 BA01 DA04 GB08

Print | Close

**Patent Record Full View** Friday, April 11 2014 THOMSON INNOVATION

# Patent/Publication: JP2007505480A

## Bibliography

**DWPI Title**

Inductive power transfer unit has electrically-conductive flux shield arranged between flux generator and support surface, so that shield extends outwardly by specific distances beyond each edge of generator

**DWPI Assignee/Applicant**

BEART P G W (BEAR-I); SPLASHPOWER LTD (SPLA-N)

**DWPI Inventor**

BEART P; BEART P G W

**Publication Date (Kind Code)**

2007-03-08 (A)

**DWPI Accession / Update**

2005-272912 / 200720

**Application Number / Date**

JP2006525192A / 2004-09-08

**Priority Number / Date / Country**

GB200320960A / 2003-09-08 / GB

WO2004GB3844A / 2004-09-08 / WO

## Abstract

**DWPI Abstract**

(WO2005024865A2)

**Novelty**

A flux generator (50) extends in two dimensions over support surface (200), when transfer unit is placed on support surface, such that secondary device placed directly on power transfer surface receives power inductively from generator. An electrically-conductive flux shield (70) is arranged between generator and support surface, so that shield extends outwardly by distances (e1-e4) beyond each edge of the generator.

**Detailed Description**

An INDEPENDENT CLAIM is also included for accessory adapted to be attached to outside of inductive power transfer unit.

**Use**

Inductive power transfer unit having flux shield made of electrically conductive material such as copper,



InductEV, Inc.
Exhibit 1025
Page 1578

cast aluminum, magnesium casing.

**Advantage**

The flux shield increases the coupling between flux generator and secondary device which is detachedly attached to portable electric or electronic device, by forcing most of the flux to go over the power transfer surface. Thereby, reducing the amount of drive current required to create flux density in secondary device. Hence, decreases losses in flux shield, and improves the efficiency of the inductive power transfer unit.

**Drawing Description**

The figure shows a perspective view of the inductive power transfer unit.

10 - coil.

50 - flux generator.

70 - electrically-conductive flux shields.

200 - support surface.

e1-e4 - distances.

## Classes/Indexing

**IPC**

| Current IPC | Invention | Version | Additional | Version |
|---|---|---|---|---|
| Full | H01F 38/14<br>H01F 27/36 | 20060101<br>20060101 | - | - |
| Main Group | - | - | - | - |
| Subclass | - | - | - | - |

| Original IPC | Invention | Version | Additional | Version |
|---|---|---|---|---|
| Advanced/Full | H01F 38/14<br>H01F 27/36 | 20060101<br>20060101 | - | - |
| Core/Main Group | H01F 27/34<br>H01F 38/14 | 20060101<br>20060101 | - | - |
| Subclass | - | - | - | - |

**ECLA**

H01F 38/14 T01F 27/36A

**JP FI Codes**

H01F 23/00 B; H01F 27/36 B; H02J 17/00 B

**JP F Terms**

5E058: CC12; CC15

5E060

5G063



InductEV, Inc.
Exhibit 1025
Page 1579

**DWPI Class**

V02

**DWPI Manual Codes**

DWPI Manual Codes

EPI Manual Codes: V02-G01D; V02-G02D

**DWPI Chemistry Resource Numbers**

DWPI Chemistry Resource Numbers

-

**DWPI Registry Numbers**

DWPI Registry Numbers

-

**Plasdoc Punch Codes**

Plasdoc Punch Codes

-

**Plasdoc Key Serial Codes**

Plasdoc Key Serial Codes

-

**Enhanced Polymer Indexing**

Enhanced Polymer Indexing

-

**Chemical Fragment Codes**

Chemical Fragment Codes

-

## Legal Status

**INPADOC Legal Status**

Get Family Legal Status

## Family



InductEV, Inc.
Exhibit 1025
Page 1580

**Family**

INPADOC Family (6)

| | Publication Number | Publication Date | Inventor | Assignee/Applicant | Title |
|---|---|---|---|---|---|
| | JP2007505480A_ | 2007-03-08 | - | - | - |
| | EP1665299A2 | 2006-06-07 | BEART Pilgrim Giles William | SPLASHPOWER LTD | INDUCTIVE POWER TRANSFER UNITS HAVING FLUX SHIELDS |
| | GB200320960D0 | 2003-10-08 | - | SPLASHPOWER LTD | Improvements relating to improving flux patterns of inductive charging pads |
| | US20070064406A1 | 2007-03-22 | Beart Pilgrim G. W. | - | Inductive power transfer units having flux shields |
| | WO2005024865A2 | 2005-03-17 | BEART Pilgrim Giles William | SPLASHPOWER LTD | INDUCTIVE POWER TRANSFER UNITS HAVING FLUX SHIELDS |
| | WO2005024865A3 | 2005-06-16 | BEART Pilgrim Giles William | SPLASHPOWER LTD | INDUCTIVE POWER TRANSFER UNITS HAVING FLUX SHIELDS |

DWPI Family (5); Countries (107)

| Publication | DWPI Update | Publication Date | IPC Code | Language |
|---|---|---|---|---|
| WO2005024865A2 | 200528 | 2005-03-17 | H01F002736 | English |
| Designated States: (National) AE AG AL AM AT AU AZ BA BB BG BR BW BY BZ CA CH CN CO CR CU CZ DE DK DM DZ EC EE EG ES FI GB GD GE GH GM HR HU ID IL IN IS JP KE KG KP KR KZ LC LK LR LS LT LU LV MA MD MG MK MN MW MX MZ NA NI NO NZ OM PG PH PL PT RO RU SC SD SE SG SK SL SY TJ TM TN TR TT TZ UA UG US UZ VC VN YU ZA ZM ZW<br>(Regional) AT BE BG BW CH CY CZ DE DK EA EE ES FI FR GB GH GM GR HU IE IT KE LS LU MC MW MZ NA NL OA PL PT RO SD SE SI SK SL SZ TR TZ UG ZM ZW | | | | |
| Local Applications: WO2004GB3844A filed 2004-09-08 | | | | |
| EP1665299A2 | 200638 | 2006-06-07 | H01F003814 | English |
| Designated States: (Regional) AT BE BG CH CY CZ DE DK EE ES FI FR GB GR HU IE IT LI LU MC NL PL PT RO SE SI SK TR | | | | |
| Local Applications: based on WO2005024865<br>WO2004GB3844A filed 2004-09-08<br>EP2004768391A filed 2004-09-08 | | | | |
| JP2007505480A | 200720 | 2007-03-08 | H01F003814 | Japanese |
| Local Applications: based on WO2005024865<br>WO2004GB3844A filed 2004-09-08<br>JP2006525192A filed 2004-09-08 | | | | |
| US20070064406A1 | 200723 | 2007-03-22 | H05K000900 | English |
| Local Applications: WO2004GB3844A filed 2004-09-08<br>US2003570761A filed 2006-10-24 | | | | |
| WO2005024865A3 | 201218 | 2005-06-16 | H01F003814 | English |
| Designated States: (Regional) BW GH GM KE LS MW MZ NA SD SL SZ TZ UG ZM ZW EA AT BE BG CH CY CZ DE DK EE ES FI FR GB GR HU IE IT LU MC NL PL PT RO SE SI SK TR OA<br>(National) AE AG AL AM AT AU AZ BA BB BG BR BW BY BZ CA CH CN CO CR CU CZ DE DK DM DZ EC EE EG ES FI GB GD GE GH GM HR HU ID IL IN IS JP KE KG KP KR KZ LC LK LR LS LT LU LV MA MD MG MK MN MW MX MZ NA NI NO NZ OM PG PH PL PT RO RU SC SD SE SG SK SL SY TJ TM TN TR TT TZ UA UG US UZ VC VN YU ZA ZM ZW | | | | |
| Local Applications: WO2004GB3844A filed 2004-09-08 | | | | |

## Claims

No Claims exist for this Record

## Description

### DWPI Drawing Description

The figure shows a perspective view of the inductive power transfer unit.

10 - coil.

50 - flux generator.

70 - electrically-conductive flux shields.

200 - support surface.

e1-e4 - distances.

### Drawing Description

Drawing Description

-

### Description

Description

-

## Citations

**Citation** *Record level*

Expand Citing Patents (7)

Cited Patents (0)

Cited Non-patents (0)

**DPCI Citation** *Patent family level*

Expand DPCI Citing Patents (40)

Expand DPCI Cited Patents (5)

Expand DPCI Cited Non-patents (2)

Expand DPCI Citation Counts

**DPCI Field of Search**

-

**DPCI Citing Patents Country**

JP; WO; FR; US; CN

**DPCI Cited Patents Country**

US; GB; DE

## Other

**DWPI Title Terms**

INDUCTIVE POWER TRANSFER UNIT ELECTRIC CONDUCTING FLUX SHIELD ARRANGE GENERATOR SUPPORT SURFACE SO EXTEND OUTWARD SPECIFIC DISTANCE EDGE

**DWPI Related Accession Numbers**

-

## Custom Fields

**Test**

-

**Relevance**

-

**Product Name**

-

**Docket number**

-

**Notes**

-

Copyright 2007-2014 THOMSON REUTERS

(19)日本国特許庁(JP)　(12)公表特許公報(A)　(11)特許出願公表番号
特表2007-505480
(P2007-505480A)
(43)公表日　平成19年3月8日(2007.3.8)

| (51)Int.Cl. | | F I | | テーマコード（参考） |
|---|---|---|---|---|
| H01F 38/14 | (2006.01) | H01F 23/00 | B | 5E058 |
| H01F 27/36 | (2006.01) | H01F 27/36 | B | |

審査請求 未請求　予備審査請求 未請求　（全 17 頁）

(21)出願番号　特願2006-525192(P2006-525192)
(86)(22)出願日　平成16年9月8日(2004.9.8)
(85)翻訳文提出日　平成18年4月29日(2006.4.29)
(86)国際出願番号　PCT/GB2004/003844
(87)国際公開番号　WO2005/024865
(87)国際公開日　平成17年3月17日(2005.3.17)
(31)優先権主張番号　0320960.8
(32)優先日　平成15年9月8日(2003.9.8)
(33)優先権主張国　英国(GB)

(71)出願人　504419014
スプラッシュパワー　リミテッド
イギリス国　ケンブリッジ　シービー4、Oダブリュエス、カウレイ・ロード　ザ・ジェフリーズ・ビルディング
(74)代理人　100087480
弁理士　片山　修平
(72)発明者　バート、ピルグリム、ガイルス、ウィリアム
イギリス国　ケンブリッジ　シービー2、5エヌエイチ　ハーストン　ロイストン・ロード　35

Fターム(参考)　5E058 CC12　CC15

最終頁に続く

(54)【発明の名称】磁束シールドを有する誘導電力伝達ユニット

(57)【要約】
一つの誘導電力伝達ユニットは支持体表面（２００）上に設置するよう適用される。磁束生成ユニット（５０）は前記支持体表面上を二次元に広がり、前記ユニットの電力伝達表面上又は近接において磁束を生成することにより、前記電力伝達表面上又は近接に設置された一つの二次装置が前記ユニットから誘導電力を受ける。一つの磁束シールド（７０）は導電性物質からなり、前記磁束生成ユニットと前記支持体表面との間に位置するよう配置され、前記磁束生成手段の少なくとも一つのエッジにおいて外側（ｅ１－ｅ４）に広がる。または、前記磁束シールドは前記誘導電力伝達ユニットの一つ以上の側面上に広がる一つ以上の部分、又は側面と磁束生成ユニットとの間に広がる一つ以上の部分を持つ可能性がある。前記磁束シールドは前記誘導電力伝達ユニットの外側に連結する着脱可能な一つのアクセサリーを備えてもよい。
【選択図】　図５

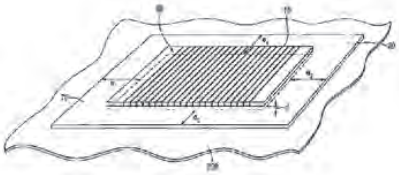

【特許請求の範囲】

【請求項１】

一つの誘導電力伝達ユニットを支持体表面上に設置した際に、前記支持体表面上を二次元に広がり、前記ユニットの電力伝達表面上又は近接において磁束を生成することにより、前記電力伝達表面上又は近接に設置された一つの二次装置が前記ユニットから誘導電力を受ける磁束生成手段と、

導電性物質からなり、前記ユニットが前記支持体表面上に設置される際に、前記シールドが前記磁束生成手段と前記支持体表面との間に位置するよう配置され、前記磁束生成手段の少なくとも一つのエッジにおいて外側に広がる磁束シールドと、

を備える、一つの支持体表面上で使用する際に設置するよう適用する誘導電力伝達ユニット。

【請求項２】

前記磁束シールドが一般に前記支持体表面に平行となるよう広がる一つの平面シートの形状をなす、請求項１記載のユニット。

【請求項３】

前記磁束シールドが前記磁束生成手段の各エッジを越えて外側に広がる、請求項１又は２記載のユニット。

【請求項４】

一つの誘導電力伝達ユニットを支持体表面上に設置した際に、前記支持体表面上を二次元に広がり、前記ユニットの電力伝達表面上又は近接において磁束を生成することにより、前記電力伝達表面上又は近接に設置された一つの二次装置が前記ユニットから誘導電力を受ける磁束生成手段と、

導電性物質からなり、前記ユニットの一つ以上の側面上を広がる一つ以上の部分又は一つ以上の側面と前記磁束生成手段との間を広がる一つ以上の部分を持つ磁束シールドと、

を備える、一つの支持体表面上で使用する際に設置するよう適用する誘導電力伝達ユニット。

【請求項５】

前記磁束シールドがさらに前記電力伝達表面の外側の周辺部分を越えて広がる、又は前記外側の周辺部分と前記磁束生成手段との間を広がる、前記請求項に記載のユニット。

【請求項６】

前記磁束シールドが前記電力伝達表面に近接する一部分を除いて前記磁束生成手段の周辺を実質上継続して広がる、前記請求項に記載のユニット。

【請求項７】

前記磁束シールドが前記ユニットの一つのケーシングの少なくとも一部分において提供する、前記請求項に記載のユニット。

【請求項８】

前記磁束シールドの一つの外側の表面の少なくとも一部分が誘電体又は他の物質により覆われている、前記請求項に記載のユニット。

【請求項９】

前記磁束シールドと前記磁束生成手段の導電体との間に一つの空間が生じることにより、磁束シールドが前記磁束生成手段の消費電力を必要以上に増加させないで磁束遮蔽を実現する、前記請求項に記載のユニット。

【請求項１０】

前記磁束シールドの厚さが一つの部分からもう一つの部分において変化する、前記請求項に記載のユニット。

【請求項１１】

前記磁束シールドの異なる部分が異なる物質から構成される、前記請求項に記載のユニット。

【請求項１２】

前記磁束シールドが前記ユニットに着脱可能に連結される、前記請求項に記載のユニッ

ト。

【請求項１３】

一つの二次装置が前記ユニットから誘導電力を受けるよう表面上又は近接に設置される一つの電力伝達表面と、

前記電力伝達表面上又は近接に磁束を生成するよう設置された磁束生成手段と、

前記ユニットに一つの磁束シールド連結し、前記連結シールドが前記電力伝達表面以外の前記ユニットの一つ以上の外部表面に設置され、又は一つ以上の前記外部表面と前記磁束生成手段との間に設置されることにより、前記シールドが前記ユニットの外側であり一つ以上の前記の外部表面の近接にある物体を前記磁束生成手段により生成された磁束から遮断する磁束シールド連結手段と、

を備える、一つの誘導電力伝達ユニット。

【請求項１４】

前記ユニットと連携してアクセサリーを所定の作業領域において前記ユニットの外側に連結する手段と、

導電性物質より構成され、前記アクセサリーが前記作業領域にある際に、前記電力伝達表面以外の前記ユニットの一つ以上の外部表面上又は近接に広がることにより、前記ユニットの外側であり一つ以上の前記の外部表面の近接にある物体を前記磁束生成手段により生成された磁束から遮断する磁束シールドと、

を備える、一つの二次装置が前記ユニットから誘導電力を受けるよう表面上又は近接に設置される一つの電力伝達表面と、前記電力伝達表面上又は近接に磁束を生成するよう設置される磁束生成手段とを持つ前記誘導電力伝達ユニットの外側に連結するよう適合するアクセサリー。

【請求項１５】

前記ユニットの外側に着脱可能に連結される、請求項１４に記載のアクセサリー。

【請求項１６】

前記ユニットに対しクリップ式カバーである、請求項１４又は１５に記載のアクセサリー。

【請求項１７】

所定の作業領域において前記ユニットに連結し、一つの支持体表面上に設置され、前記ユニットの磁束生成手段が前記磁束生成手段と前記支持体表面との間に設置されたアクセサリーの磁束シールドと共に前記支持体表面上を二次元に広がり、前記磁束シールドが前記磁束生成手段の少なくとも一つのエッジを越えて外側に広がる、前記請求項１４から１６のいずれかに記載されるアクセサリー。

【請求項１８】

前記磁束シールドが前記支持体表面に一般に平行に広がる一つの平面シートの形状である、請求項１７に記載のアクセサリー。

【請求項１９】

前記磁束シールドが前記磁束生成手段の各エッジを越えて外側に広がる、請求項１７又は１８に記載のアクセサリー。

【請求項２０】

前記アクセサリーが前記所定作業領域の前記ユニットに連結する際に、前記磁束シールドがさらに前記ユニットの一つ以上の側面を越えて広がる、請求項１４から１９のいずれかに記載のアクセサリー。

【請求項２１】

前記アクセサリーが前記所定作業領域の前記ユニットに連結する際に、前記磁束シールドがさらに前記ユニットの前記電力伝達表面の外部周辺部分を越えて広がる、請求項１４から２０のいずれかに記載のアクセサリー。

【発明の詳細な説明】

【技術分野】

【０００１】

本発明は磁束シールドを有する誘導電力伝達ユニットに関する。

【背景技術】

【０００２】

本出願人による国際公開公報ＷＯ－Ａ－０３／０９６５１２にて記載されている誘導電力伝達ユニットは、その内容は参照によって本発明に組み込まれており、実質的に交番磁界が生じる平面又は曲面の電力伝達表面を提供する。本磁場は電力伝達面上の任意の二次装置に連結する。異なる例において、本磁場表面の面内で回転し、電力を受ける面に位置する二次装置を自由に配置することが可能である。例えば、電力を受けていない間は表面から除去させるために、二次装置は携帯用の電気装置、電子装置又は充電式バッテリーに組み込まれる。

【発明の開示】

【発明が解決しようとする課題】

【０００３】

上記の電力伝達ユニットの磁束生成ユニット（磁気アセンブリ）の設計によっては、所望する水平面ではない他の方向に磁場を発するかもしれない。例えば、磁束生成ユニット“スカッシュド　ソレノイド”設計においては上位及び下位に対照的に磁束を発生する。

【０００４】

図１において、磁束生成ユニット５０は、一つのフォーマー２０に巻き付いた平面型ソレノイドの形状をした一つのコイル１０から構成される。フォーマー２０は磁性材料の薄板の形状を成す。この結果、磁束生成ユニットの上面において実質上水平磁場を生じるが、下面においても同等の磁場を生じる。一般に、両方の磁場の磁力線は各面においてお互いに平行に伸長し、実質上コイルの巻線に対し垂直となる。二次装置６０は上面に位置するよう図示されている。

【０００５】

図２は図１と同様な構成を示しているが、コイル１０の巻き付き面に直行する方向でフォーマー２０の周囲を巻き付くコイル１１が追加されている。二つのコイル１０及び１１を適切な状態で駆動することにより、磁束生成ユニットは電力伝達表面（上面）上に実質上水平であり、表面の面内を回転する磁場を発生させるかもしれない。典型的な例では、上面上の磁束はユーザが所望する機能（二次装置６０に電力供給する）を提供するが、他の面上の磁束は有益ではなく、むしろ不要な作用を生じるかもしれない。

【０００６】

図３は、図１の磁束生成ユニット５０により発生した瞬時における磁力線の有限要素解析による側面図を示している。磁力線はソレノイドの中央部を通過し、空気を介してソレノイドの上及び下を通過するために分離する。二次装置６０はユニット５０上に位置するよう示されている。

【０００７】

不要な作用は、特に一次ユニットが、軟鋼机又は車のシャーシの部分等の鉄類の面に配置する際に生じる。軟鋼の透磁率は十分に高く、空気を介する代替パスよりもかなり低い磁気抵抗を有する磁束のためのリターンパスを提供する。したがって、磁束は金属机に吸い込まれる。図４は、金属机２００が磁束生成ユニットの下に置かれた際の有限要素解析による図を示している。鉄の高い透磁率は、磁力線に対し、磁束生成ユニット５０の一端部から他の端部に戻る際に、空気よりもかなり低い磁気抵抗を提供するので、磁力線は空気よりも机の内部を通過する。これは、次の二つの理由により有益ではない。

【０００８】

誘導電力伝達ユニット（一次ユニット）により生成された大部分の磁束は、ユニットの上面上の二次装置の内部を通過する代わりに金属机の内部を通過する。したがって、システムは効率的ではなく（電力の消費が増え）、二次装置が受ける電力が変動する。

【０００９】

金属机の内部を通過する磁束は、ヒステリシス、渦電流等による損失の中核をなし、熱の上昇の要因ともなる。

【００１０】
銅、アルミニウム等の導体材料を交番磁界に設置すると、磁場は磁界内部を循環する渦電流を発生させる。渦電流は完全導体を上限とし、課せられた磁場に同等であり相反する二次磁場を発生させ、導体の表面において相殺する。したがって、これらの導体材料は、“磁束シールド”として見られ、磁気システム内部の磁束線が導体材料から除外される。システムの一部を磁場から遮断し、他の部分に磁場を集中させる。本発明の優先日以降に公開され、本発明より先の優先日を持つ英国特許出願ＧＢ－２３８９７２０は、プリント回路基板形状の磁束生成ユニットを開示しており、プリント回路基板はユニットの上面上に磁束を生成する螺旋状の導電性トラックのアレイを有する。フェライトシートは基板の下に敷かれ、導電性シートはフェライトシートの下に設置され、磁束シールドを提供する。フェライトシート及び導電性シートは、回路と同一の寸法を持ち、平行に保たれる。

【課題を解決するための手段】

【００１１】
本発明の第１の実施態様によれば、一つの誘導電力伝達ユニットを支持体表面上に設置した際に、前記支持体表面上を二次元に広がり、前記ユニットの電力伝達表面上又は近接において磁束を生成することにより、前記電力伝達表面上又は近接に設置された一つの二次装置が前記ユニットから誘導電力を受ける磁束生成手段と、導電性物質からなり、前記ユニットが前記支持体表面上に設置される際に、前記シールドが前記磁束生成手段と前記支持体表面との間に位置するよう配置され、前記磁束生成手段の少なくとも一つのエッジにおいて外側に広がる磁束シールドとを備える、一つの支持体表面上で使用する際に設置するよう適用する誘導電力伝達ユニットを備える。

【００１２】
本発明の第２の実施態様によれば、一つの誘導電力伝達ユニットを支持体表面上に設置した際に、前記支持体表面上を二次元に広がり、前記ユニットの電力伝達表面上又は近接において磁束を生成することにより、前記電力伝達表面上又は近接に設置された一つの二次装置が前記ユニットから誘導電力を受ける磁束生成手段と、導電性物質からなり、前記ユニットの一つ以上の側面上を広がる一つ以上の部分又は一つ以上の側面と前記磁束生成手段との間を広がる一つ以上の部分を持つ磁束シールドとを備える、一つの支持体表面上で使用する際に設置するよう適用する誘導電力伝達ユニットを備える。

【００１３】
磁束生成ユニットが直線方向に前後に変化する磁場を生成することにより稼動する場合、導電性シールドはシールドの近辺において磁場を消滅させる同等の大きさで相反する交流線形磁場内部にて誘導される。ユニットが層表面上で回転する磁場を生成することにより稼動する場合は、導電性シールドは磁場を消滅させ、回転する磁場内部にて誘導される。

【００１４】
このような電力伝達ユニットは、磁束をユニットの磁束効率性を向上するのに有用である方向に集中させる。例えば、ユニットの下の金属机に対するカップル等の副次的な作用を遮断するので、有益である。

【００１５】
さらに、磁束シールドは、大部分の磁束を電力伝達表面上に通すことにより、磁束生成ユニットと二次装置との間のカップリングを増加させる。したがって、二次装置内部で所定の磁束密度を生成させるために、磁束生成ユニット内部でより小さい駆動電流を必要とする。それにしたがって、磁束シールド内のロスが最小となれば、システムは全体的により効率的となる。

【００１６】
装置が熱をおびず且つ電力的に効率良く稼動させるために、導電性シールド内部の $I^2R$ ロス（熱を分散させる循環電流によるロス）を少量に抑えなければならない。

【００１７】
導電性シールドは、銅シート又はアルミニウムシート等の高い導電性物質により構成す

ることが有益である。そして、シートは、シート内部で誘導された渦電流が過度な抵抗を受け、熱を発生することがない十分な厚さを有する。磁束密度は、即ち渦電流は装置の異なる部分において変動するので、厚さ又は物質の要件が異なる可能性がある。

【００１８】

シールドと磁束生成ユニットの電動導体との間の空間は、最適化することができる。その値が大きいと（即ちシールドと電動導体との空間が大きいと）、導電性シールド内部で誘導された電流密度が低くなり、発熱を低くする。しかしながら、必要となる全体的な大きさとトレードオフの関係となり、人間工学的側面には適合しないかもしれない。

【００１９】

さらに、導電性シールドは所望する磁束パスを“ショート”する低磁気抵抗パスを備える可能性があるので、実質的には鉄であってはならない。

【００２０】

本発明の一実施態様において、導電性シールドは、一つの連続するシート内部で、磁束生成ユニットの一つの側面を除いて実質上全部の面上を広がる。実質上露出する側面は層状の表面をなしており、二次装置に電力を供給する。例えば、生成ユニットが実質上平面角胴形である場合、シールドはユニットの底面及び４つの側面を覆うよう広がる可能性がある。他の例として、生成ユニットが実質上平面円筒形である場合、シールドはユニットの底面及び円筒形の側面を覆うよう広がる可能性がある。このような構成の利点として、平面シートと比較して、磁束生成ユニットの下の金属物を通過するために磁束が通過するパスをさらに増加させるかもしれない。

【００２１】

本発明の他の実施態様において、導電性シールドは、磁束生成ユニットの一つ以上の側面の一部分を除いて囲む可能性がある。例えば、磁束生成ユニットが実質上平面角胴形である場合、シールドは、磁束生成ユニットの底辺、側面、頂面の外側部分を囲むかもしれない。これは、磁束生成ユニットの頂面のエッジにおける磁束パターンの制御に効果的かもしれない。

【００２２】

導電性シールドは、成形又は鋳造されたアルミニウム、マグネシウムのケーシング等の誘導電力伝達ユニットの筐体部分を形成する可能性があり、費用の削減において効果的かもしれない。

【００２３】

本発明の第３の実施態様によれば、一つの二次装置が前記ユニットから誘導電力を受けるよう表面上又は近接に設置される一つの電力伝達表面と、前記電力伝達表面上又は近接に磁束を生成するよう設置された磁束生成手段と、前記ユニットに一つの磁束シールド連結し、前記連結シールドが前記電力伝達表面以外の前記ユニットの一つ以上の外部表面に設置され、又は一つ以上の前記外部表面と前記磁束生成手段との間に設置されることにより、前記シールドが前記ユニットの外側であり一つ以上の前記の外部表面の近接にある物体を前記磁束生成手段により生成された磁束から遮断する磁束シールド連結手段とを備える、一つの誘導電力伝達ユニットを備える。

【００２４】

本発明の第４の実施態様によれば、前記ユニットと連携してアクセサリーを所定の作業領域において前記ユニットの外側に連結する手段と、導電性物質より構成され、前記アクセサリーが前記作業領域にある際に、前記電力伝達表面以外の前記ユニットの一つ以上の外部表面上又は近接に広がることにより、前記ユニットの外側であり一つ以上の前記の外部表面の近接にある物体を前記磁束生成手段により生成された磁束から遮断する磁束シールドとを備える、一つの二次装置が前記ユニットから誘導電力を受けるよう表面上又は近接に設置される一つの電力伝達表面と、前記電力伝達表面上又は近接に磁束を生成するよう設置される磁束生成手段とを持つ前記誘導電力伝達ユニットの外側に連結するよう適合するアクセサリーを備える。

【００２５】

本発明の第３及び４の実施態様において、導電性シールドは電力伝達ユニットの下又は周辺に設置される別個のアクセサリーとして提供される。随意的に、例えば、クリップ式カバー等の保持可能なアクセサリーとして提供されるかもしれない。これは、電力伝達ユニットの部品の費用を最小限に抑えるともに、鉄机上等の磁場を拘束する場所においてユニットを使用する場合、アクセサリーを購入できるので、有益である。

【００２６】

磁束生成ユニットの一実施態様によれば、電磁場を生成する少なくとも一つの手段を持ち、前記手段は電力伝達ユニットの表面内部又は平行する所定の領域を２次元の方向に分散することにより、電力伝達表面の少なくとも一つの電力伝達領域が実質的に所定の領域と同一の広がり持つよう画定し、帯電領域は電力伝達表面上に一定の幅及び長さを持つ。好ましくは、所定の電流が供給され一次ユニットが実質的に電磁気的に絶縁されている場合、手段によって生成される電磁場は電磁気線を有し、電磁気線に平行に測定される電力伝達領域の任意の4分の１の長さの部分において平均する場合、電力伝達表面に対しその近辺において角度４５°以下に内在し、２次元に分散される。手段は、電力伝達領域に対し実質的に垂直に測定される高さを持ち、その高さは電力伝達ユニットの幅又は長さのいずれより短いことが好ましい。高さは、幅又は高さのいずれかの５分の１又は１０分の１より小さいことが望ましく、誘導電力伝達ユニット全体として平面基盤又はプラットフォームの形状となる。少なくとも一つの導電体を含む二次装置が誘導電力伝達ユニットの電力伝達領域上又は近辺に設置される場合、電磁気線は二次装置の少なくとも一つの導体と結びつき、誘導電流が発生する。導電性シート又はシールドは、電力伝達領域が設置される側面を除く位置において、電力伝達ユニット上又は内部に配置される。

【００２７】

本発明の文脈において、“層状”の用語は、薄板又は薄層の形状を表している。薄板又は薄層は実質的に平面又は曲線の可能性がある。

【００２８】

導電性シート又はシールドが一般的に層状であり、電力伝達表面に面している一つ以上のエッジ部分を含むかもしれない。

【００２９】

導電性シート又はシールドは、電力伝達表面と対面する電力伝達ユニットの一つの側面に露出し、ユニットのケーシングの部分等により、誘電体又は他の物質からなる層で覆われているかもしれない。

【発明を実施するための最良の形態】

【００３０】

本発明をよりよく理解し、本発明がどのように実施されるかを明らかにするため、以下では一例として添付図面が参照される。

【００３１】

図５は本発明の第１実施態様による誘導電力伝達ユニットの一部を示している。本実施例において、磁束生成ユニット５０は図１を参照して序論にて記載された磁束生成ユニットと同様の一般的な構成を有する。当然ながら、代替として図２に示された磁束生成ユニット５０‘を本実施態様（及び他の実施態様）に用いることが可能である。同様に、国際公開公報ＷＯ－Ａ－０３／０９６５１２にて記載された種々の磁束生成ユニットを本発明の実施態様に使用することが可能である。

【００３２】

磁束生成ユニット５０は、フォーマー２０の周りに巻き付くコイル１０からなる。フォーマー２０は磁性材料の薄いシートの形状をなす。誘導電力伝達ユニットが支持体表面２００上に設置される場合、磁束生成ユニット５０は支持体表面上を２次元の範囲で広がる。

【００３３】

磁束シールド７０は銅等の導電性物質からなり、磁束生成ユニット５０と支持体表面２００との間に設置される。図５に示されるように、シールド７０は磁束生成ユニット５０

の各エッジから距離ｅ１からｅ４の範囲にて外側に延長する。例えば、距離ｅ１は５０ｍｍ、距離ｅ２は５０ｍｍ、距離ｅ３は５０ｍｍ、距離ｅ４は５０ｍｍとなる。

【００３４】

本実施態様において、磁束シールド７０は支持体表面に一般的に平行して拡張する平面シートの形状をなす。シートとフォーマー２０の底面上に拡張するコイル１０の導電体の間には、大きさｄ、例えば４ｍｍの隙間が生じる。

【００３５】

図６は、有限要素解析法による図５のユニットを示している。支持体表面２００は金属机を想定している。シールド７０は、磁束線がシールド周辺を通過する際に金属机を通過するよう強いるので、パスの長さを増加させ、従って“机”パスの有効磁気抵抗を増加させる。その結果、机を通過するよりユニット上を通過する磁束線が増加するので、机の存在の影響が少なくなる。

【００３６】

図５において、磁束シールド７０はユニット５０の全エッジを越えて拡張するように示されているが、有意義な磁束遮蔽効果は、例え磁束シールドが一つのエッジ又は向かい合う一組のエッジのみを越えて拡張する場合においても得ることができる。

【００３７】

図７は本発明の第２実施態様による誘導電力伝達ユニットの部分を示している。本実施態様において、５つの側面（底面８２及び側面８４、８６、８８及び９０）を持つ磁束シールド８０を備える。磁束シールド８０の底面８２は、磁束生成ユニット５０の下面及び支持体面２００との間に広がる。本実施例において、磁束シールド８０は複数の側面を持つので、底面８２は磁束生成ユニット５０のエッジを図５の実施態様で示す距離ｅ１からｅ４の範囲にて広がる必要がない。例えば、ｅ１からｅ４は各々４ｍｍかもしれない。これにより、電力伝達ユニットの全体寸法は小さくなると共に、机パスの有効磁気抵抗を高く保持することが可能となる。側面８４、８６、８８及び９０の高さは、図７において明確にするために誇張されている。実際には、側面は磁束生成ユニット５０の上面の上より延長する必要がない。

【００３８】

磁束シールド８０は、トレイ形状のメンバーを構成するために、各エッジにおいて切断され折り畳むことが可能な導電体の平面シートの形状をなす可能性がある。

【００３９】

図８は有限要素解析法による図７のユニットを示している。

【００４０】

図９は本発明の第３の実施態様による誘導電力伝達ユニット４００の部分を示している。本実施態様において、磁束生成ユニット５０は第１及び第２実施態様を参照して記載された磁束生成ユニットに類似しており、ユニット４００のケーシング４１０の内部に含まれる。ケーシング４１０の上面は本実施態様の電力伝達表面を提供し、二次装置６０は磁束生成ユニット５０から誘電電力を受けため直接表面上に設置される。

【００４１】

ケーシング４１０の４つの側面には、小さな円形の凹部４２０が形成される。

【００４２】

本実施態様において磁束シールド９０は、誘導電力伝達ユニット４００の外側に連結するよう適合するアクセサリーを有する。磁束シールド９０は、図７に示される磁束シールド８０の形状と類似し、磁束シールド９０の直立した側面の内面上に形成する円形凸部９５を有する。各凸部９５は、誘導電力伝達ユニット４００のケーシング内部の凹部４２０と係合する。このような方法で、磁束シールド９０の及び／又はケーシング４１０の物質の弾性により、ユニット４００は磁束シールド９０に挿入することが可能となる。凹凸部は、物体ユニット４００の外側の磁束シールド９０を保持する働きを行い、磁束シールドがユニットの外面に隣接するユニットの外側の物体を、磁束生成ユニット５０により生成された磁束から遮断する。

【００４３】
着脱可能な磁束シールドには幾つかの利点がある。或る応用においては、磁束シールドを必要としない。例えば、シールドはユニットが非金属の支持体表面に配置される場合には必要としない。このようにして、ユニットは出来得る限り小さく少ない費用にて製造することが可能となる。ユーザが金属性の支持体表面上でユニットを使用する場合には、磁束シールドをオプションのアクセサリーとして購入すればよい。

【００４４】
磁束シールドが着脱可能なアクセサリーの形状をなす場合、磁束シールドは第１又は第２実施態様にて記載された形状を必要としない。例えば、磁束シールドは磁束生成ユニット５０のエッジを越えて外側に広がることを必要としない。磁束生成ユニット５０の平面領域又は平面領域より小さい領域を隣接させることが可能である。例えば、平面シート形状の導電性シールドをアクセサリーのトレイ形状プラスティックハウジングの底面に組み込むことも可能である。

【００４５】
誘導電力伝達ユニットの外側に連結することができれば、如何なる方法を用いることが可能である。例えばスナップ式が特に有益であるが、磁束シールドはネジ又はＶｅｌｃｒｏ（登録商標）を用いて連結することができる。同様に、磁束シールドとユニットのケーシングとを単に固定することも可能である。

【００４６】
一例として、本発明の実施態様の一連のテスト結果を以下に示す。このテストにおいて、約１７５×１２５×９ｍｍの大きさの磁束生成ユニット５０を用いている。磁束シールド７０又は８０は０．６ｍｍの厚さの銅シートからなる。金属机２００は、５００ｍｍ×５００ｍｍ×０．６ｍｍの大きさの金属シートである（磁気的には、事実上無限板となる）。

【００４７】
磁束生成ユニット５０を通る電流は、二次装置６０に供給される電力が各テストの開始時において同一となるように調整される。制御ループは、各テストの間において電流が一定となるよう保持する。

【００４８】
二次装置が受ける電力は監視され、充電器から引き出される追加電力も監視される。

【００４９】
結果を以下に示す。

【表１】

| テスト条件 | 二次装置に生じる電力 | 必要とする発電機の過電力 |
|---|---|---|
| １ａ．磁束シールドなし | １００％ | ０W |
| １ｂ．１ａに鉄シートを設置 | １２３％ | １１W |
| ２ａ．磁気アセンブリの直下に磁束シールドシート（図５）を設置 | １００％ | １．５W |
| ２ｂ．磁束シールドをアセンブリから４mm離すよう移動 | １００％ | ０．７W |
| ２ｃ．２ｂに鉄シートを設置 | １１０％ | ４．６W |
| ３ａ．下方及びエッジ（４mmの隙間）周辺の磁束シールボックス（図７） | １００％ | １．５W |
| ３ｂ．３ａに鉄シートを設置 | １０８％ | ２．２W |

【００５０】

テスト１は磁束シールドのないケースを示している。最初は、磁束線は図３に示されている概観をなす。アセンブリの下に金属シートを設置することにより、磁束線は下方にシートを介して通過し、図４に示すように上方及びシートの上を通る。発生器内の制御ループはコイル電流を一定に保持するため１１W消費させられるが、これは効率的ではなく、金属が暖められるため最適な状態ではない。さらに、発生器の電力を多量に消費しても、金属机内の渦電流が不十分な磁束シールドとしての働きをするので、二次装置は受ける電力は１２３％となり、最適な状態とはならない。

【００５１】

テスト２は第１実施態様にて示されているように、下に平面の磁束シールドを設置したケースを示している。大きな銅製磁束シート（１９０ｍｍ×１４０ｍｍ×０．６ｍｍ）を磁気アセンブリ（テスト２ａ）の直下に設置することにより、発生器に対し１．５Wの追加電力が供給される。これは、コイルにてショートが発生しアセンブリに入り込むことによると推定される。アセンブリから４ｍｍ（即ち、図５の中でｄ＝４ｍｍ）離すことにより、この流出を０．７W（テスト２ｂ）に削減する。金属シートを挿入することは、発生器に対し４．６W（即ち、３．９Wの増加）を供給するにすぎず、二次装置に対する電力は１１０％（テスト２ｃ）に変化するのみである。これは図６に図示されている。したがって、磁束シールドは各両面効果を半分以下に減少させる。

【００５２】

テスト３は、図７の第２実施態様に示されているように、磁束シールドのエッジが磁気アセンブリのエッジの周辺で直立するケースを示している。シールドは全ての面（テスト３ａ）において、テスト２aの状況を避けるために、磁気アセンブリから４ｍｍ離して置かれる。発生器は、シールド内の渦電流による損失を解消するために、１．５Wの増加分を供給する。金属シート（テスト３ｂ）を挿入することは、発生器に対し追加２．２W（即ち０．７Wの増加）を供給するのみであり、二次装置に対する電力を１０８％に変更するのみである。

【００５３】

これらのテスト結果は、金属物体の副次的作用を減少させる磁束シールドの２つの主要な利点を明確に示している。即ち、鉄に対する発生器による電力供給の減少、及び二次装置に対する電力の変動の減少である。

【００５４】
所定の電力伝達表面上を除いて、磁気アセンブリの周辺を完全に覆うシールドは、発生器上の金属机の作用を大幅に減少させ、二次装置上の金属机の作用を半分以下にする。例えば、磁束シールド内の渦電流の損失を解消するためには、発生器による１．５４Ｗの追加の静止電力の供給を伴うこととなる。
【００５５】
本発明の好ましい特徴は本発明の全面に適用され、如何なる組合せにて用いることが可能である。
【００５６】
本明細書の説明と特許請求の範囲を通じて、語「～を具備する（comprise）」、「～を包含する（contain）」、及び、これらの語の変形、例えば、「～を備えている（comprising）」及び「～を備える（comprises）」は、「～を含んでいるが、～に限定されない」をいう意味であり、列挙されていない構成要素、整数、一部分、添加物、又はステップを除外することを意図していない（かつ、除外するものではない）。
【図面の簡単な説明】
【００５７】
【図１】本発明の実施態様における使用に適する磁束生成ユニットの例を示す斜視図である。
【図２】本発明の実施態様における使用に適する磁束生成ユニットの他の例を示す斜視図である。
【図３】磁束線の生成を表す図１の磁束生成ユニット側面図である。
【図４】金属机が本発明の構成に設置された場合に生成される磁束線を表す図３に対応する図である。
【図５】本発明の第１実施態様による誘導電力伝達ユニットの部分を示す斜視図である。
【図６】ユニットが金属机上に設置された場合に生成される磁束線を表す図５のユニットの側面図である。
【図７】本発明の第２実施態様による誘導電力伝達ユニットの部分を示す斜視図である。
【図８】ユニットが金属机上に設置された場合に生成される磁束線を表す図７のユニットの側面図である。
【図９】本発明の第３実施態様による誘導電力伝達ユニット及びアクセサリーの側面図である。

【図１】

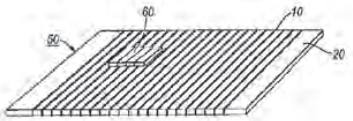


【図２】

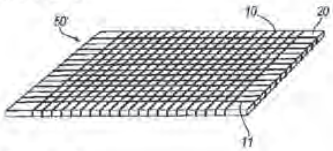


【図３】

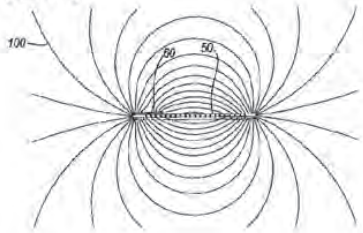


【図４】

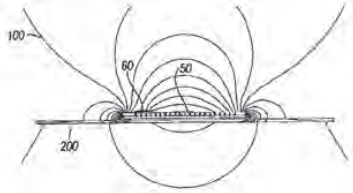


【図５】

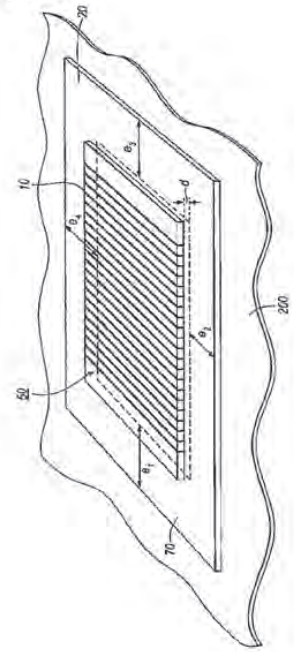


【図６】

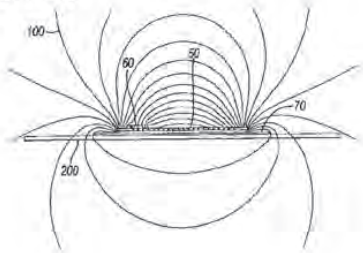

【図７】

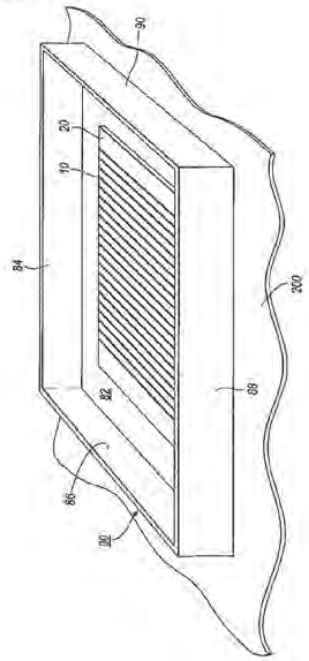
90
20
10
84
200
82
89
86
80

【図８】

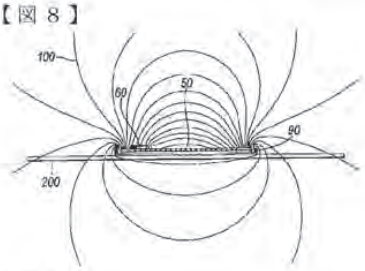
100
60
50
90
200

【図９】

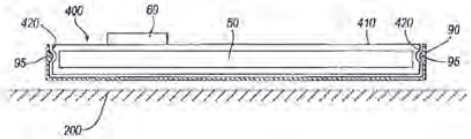
420
400
60
50
410
420
90
95
95
200

【国際調査報告】

## INTERNATIONAL SEARCH REPORT

Inter Application No
PCT/GB2004/003844

A. CLASSIFICATION OF SUBJECT MATTER
IPC 7 H01F38/14 H01F27/36

According to International Patent Classification (IPC) or to both national classification and IPC

B. FIELDS SEARCHED

Minimum documentation searched (classification system followed by classification symbols)
IPC 7 H01F H02J H05K

Documentation searched other than minimum documentation to the extent that such documents are included in the fields searched

Electronic data base consulted during the international search (name of data base and, where practical, search terms used)
EPO-Internal

C. DOCUMENTS CONSIDERED TO BE RELEVANT

| Category * | Citation of document, with indication, where appropriate, of the relevant passages | Relevant to claim No. |
|---|---|---|
| Y | US 5 959 433 A (ROHDE ET AL)<br>28 September 1999 (1999-09-28)<br>column 3, lines 3-12; figures 1,2<br>column 3, lines 22-27 | 1-9,13,<br>14,17-21 |
| Y | DE 197 43 860 C1 (BRAUN<br>AKTIENGESELLSCHAFT, 60326 FRANKFURT, DE)<br>8 April 1999 (1999-04-08)<br>column 2, line 38 - column 3, line 9<br>column 3, line 33 - column 4, line 48;<br>figures 1,2 | 1-9,13,<br>14,17-21 |

-/--

[X] Further documents are listed in the continuation of box C.

[X] Patent family members are listed in annex.

* Special categories of cited documents :

"A" document defining the general state of the art which is not considered to be of particular relevance
"E" earlier document but published on or after the international filing date
"L" document which may throw doubts on priority claim(s) or which is cited to establish the publication date of another citation or other special reason (as specified)
"O" document referring to an oral disclosure, use, exhibition or other means
"P" document published prior to the international filing date but later than the priority date claimed

"T" later document published after the international filing date or priority date and not in conflict with the application but cited to understand the principle or theory underlying the invention
"X" document of particular relevance; the claimed invention cannot be considered novel or cannot be considered to involve an inventive step when the document is taken alone
"Y" document of particular relevance; the claimed invention cannot be considered to involve an inventive step when the document is combined with one or more other such documents, such combination being obvious to a person skilled in the art.
"&" document member of the same patent family

| Date of the actual completion of the international search | Date of mailing of the international search report |
|---|---|
| 31 March 2005 | 11/04/2005 |
| Name and mailing address of the ISA<br>European Patent Office, P.B. 5818 Patentlaan 2<br>NL- 2280 HV Rijswijk<br>Tel. (+31-70) 340-2040, Tx. 31 651 epo nl,<br>Fax: (+31-70) 340-3018 | Authorized officer<br>Reder, M |

Form PCT/ISA/210 (second sheet) (January 2004)

## INTERNATIONAL SEARCH REPORT

Inter[illegible]al Application No
PCT/GB2004/003844

C.(Continuation) DOCUMENTS CONSIDERED TO BE RELEVANT

| Category * | Citation of document, with indication, where appropriate, of the relevant passages | Relevant to claim No. |
|---|---|---|
| Y | HATANAKA K ET AL: "POWER TRANSMISSION OF A DESK WITH A CORD-FREE POWER SUPPLY" IEEE TRANSACTIONS ON MAGNETICS, IEEE INC. NEW YORK, US, vol. 38, no. 5, September 2002 (2002-09), pages 3329-3331, XP001132144 ISSN: 0018-9464 abstract right-hand column; figures 1-3 | 1-3,7,9, 13,14, 17-19,21 |
| P,X | GB 2 389 720 A (* CITY UNIVERSITY OF HONG KONG) 17 December 2003 (2003-12-17) cited in the application abstract page 7, line 20 - page 9, line 6; figures 4,5 | 1 |
| A | US 5 528 113 A (BOYS ET AL) 18 June 1996 (1996-06-18) column 6, line 44 - column 7, line 52; figures 10-12 | 1-21 |
| A | US 6 389 318 B1 (ZARINETCHI FARHAD ET AL) 14 May 2002 (2002-05-14) abstract | 1-21 |

Form PCT/ISA/210 (continuation of second sheet) (January 2004)

## INTERNATIONAL SEARCH REPORT

rmation on patent family members

Intern al Application No
PCT/GB2004/003844

| Patent document cited in search report | | Publication date | Patent family member(s) | | | Publication date |
|---|---|---|---|---|---|---|
| US 5959433 | A | 28-09-1999 | NONE | | | |
| DE 19743860 | C1 | 08-04-1999 | NONE | | | |
| GB 2389720 | A | 17-12-2003 | WO | 03105308 | A1 | 18-12-2003 |
| | | | AU | 2003229145 | A1 | 22-12-2003 |
| US 5528113 | A | 18-06-1996 | AU | 8006494 | A | 08-05-1995 |
| | | | AU | 8006594 | A | 08-05-1995 |
| | | | DE | 4498007 | T0 | 21-11-1996 |
| | | | DE | 69432262 | D1 | 17-04-2003 |
| | | | EP | 0727105 | A1 | 21-08-1996 |
| | | | JP | 7170681 | A | 04-07-1995 |
| | | | WO | 9511544 | A1 | 27-04-1995 |
| | | | WO | 9511545 | A1 | 27-04-1995 |
| | | | NZ | 274938 | A | 27-05-1998 |
| | | | NZ | 274939 | A | 24-06-1997 |
| | | | US | 5821638 | A | 13-10-1998 |
| US 6389318 | B1 | 14-05-2002 | US | 6324430 | B1 | 27-11-2001 |
| | | | AU | 4861399 | A | 24-01-2000 |
| | | | CA | 2336725 | A1 | 13-01-2000 |
| | | | EP | 1095384 | A1 | 02-05-2001 |
| | | | US | 2002058971 | A1 | 16-05-2002 |
| | | | US | 2002055763 | A1 | 09-05-2002 |
| | | | WO | 0002212 | A1 | 13-01-2000 |

Form PCT/ISA/210 (patent family annex) (January 2004)

フロントページの続き

(81)指定国 AP(BW,GH,GM,KE,LS,MW,MZ,NA,SD,SL,SZ,TZ,UG,ZM,ZW),EA(AM,AZ,BY,KG,KZ,MD,RU,TJ,TM),EP(AT,BE,BG,CH,CY,CZ,DE,DK,EE,ES,FI,FR,GB,GR,HU,IE,IT,LU,MC,NL,PL,PT,RO,SE,SI,SK,TR),OA(BF,BJ,CF,CG,CI,CM,GA,GN,GQ,GW,ML,MR,NE,SN,TD,TG),AE,AG,AL,AM,AT,AU,AZ,BA,BB,BG,BR,BW,BY,BZ,CA,CH,CN,CO,CR,CU,CZ,DE,DK,DM,DZ,EC,EE,EG,ES,FI,GB,GD,GE,GH,GM,HR,HU,ID,IL,IN,IS,JP,KE,KG,KP,KR,KZ,LC,LK,LR,LS,LT,LU,LV,MA,MD,MG,MK,MN,MW,MX,MZ,NA,NI,NO,NZ,OM,PG,PH,PL,PT,RO,RU,SC,SD,SE,SG,SK,SL,SY,TJ,TM,TN,TR,TT,TZ,UA,UG,US,UZ,VC,VN,YU,ZA,ZM,ZW

Espacenet

# Bibliographic data: JP2007537637 (A) — 2007-12-20

## ANTENNA ARRANGEMENT FOR INDUCTIVE ENERGY TRANSMISSION AND USE OF THE ANTENNA ARRANGEMENT

No documents available for this priority number.

**Inventor(s):**

**Applicant(s):**

**Classification:** - international: *H01F1/26; H01F3/08; H01F38/14; H01P5/02; H01Q7/06; H01Q7/08; H02J7/02*
- cooperative: **H01Q7/06**

**Application number:** JP20070512117 20050513

**Priority number (s):** WO2005EP05271 20050513 ; DE20041023815 20040513

**Also published as:** WO2005112192 (A1) WO2005112192 (A9) US2007126650 (A1) US7545337 (B2) EP1745527 (A1) EP1745527 (B1) DE102004023815 (A1) less

**Abstract not available for JP2007537637 (A)**
**Abstract of corresponding document: WO2005112192 (A1)**

An antenna arrangement is disclosed for the inductive transmission of energy by means of magnetic cores made of a composite material with amorphous or nanocrystalline flakes and a moulded plastic material, so that the magnetic properties suitable for effective energy transmission can be adjusted at the same time as high security against fracture and a small overall height are achieved.

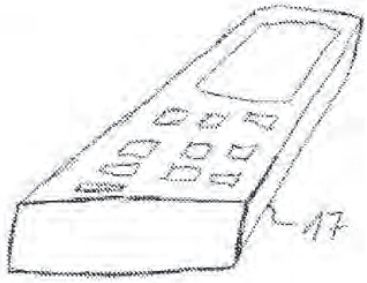


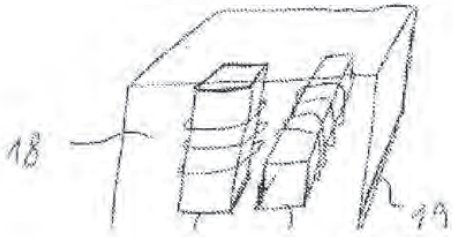


Last updated: 11.12.2013 Worldwide Database 5.8.15.10; 93p



InductEV, Inc.
Exhibit 1025
Page 1601

8
9

(19)日本国特許庁(JP)　(12)公表特許公報(A)　(11)特許出願公表番号
特表2007-537637
(P2007-537637A)
(43)公表日　平成19年12月20日(2007.12.20)

| (51)Int.Cl. | | | F I | | | テーマコード（参考） |
|---|---|---|---|---|---|---|
| H01Q | 7/08 | (2006.01) | H01Q | 7/08 | | 5E041 |
| H01P | 5/02 | (2006.01) | H01P | 5/02 | Z | |
| H01F | 1/26 | (2006.01) | H01F | 1/26 | | |
| H01F | 3/08 | (2006.01) | H01F | 3/08 | | |

審査請求 未請求　予備審査請求 未請求　（全 15 頁）

(21)出願番号　特願2007-512117(P2007-512117)
(86)(22)出願日　平成17年5月13日(2005.5.13)
(85)翻訳文提出日　平成18年11月10日(2006.11.10)
(86)国際出願番号　PCT/EP2005/005271
(87)国際公開番号　WO2005/112192
(87)国際公開日　平成17年11月24日(2005.11.24)
(31)優先権主張番号　102004023815.4
(32)優先日　平成16年5月13日(2004.5.13)
(33)優先権主張国　ドイツ(DE)

(71)出願人　500460379
バクームシュメルツェ　ゲゼルシャフト　ミット　ベシュレンクテル　ハフツング　ウント　コンパニ　コマンディートゲゼルシャフト
ドイツ連邦共和国　デー－６３４５０　ハナウ　グリューナー　ヴェーク　３７
(74)代理人　100075166
弁理士　山口　巖
(72)発明者　ギュンター、ヴルフ
ドイツ連邦共和国　６３４７７　マインタール　フロッスグラーベンシュトラーセ　１２

Fターム(参考)　5E041 AA02 AA03 AA04 AA07 BB03 BC05 BD03 CA01 NN06

最終頁に続く

(54)【発明の名称】誘導エネルギー伝送用アンテナ装置およびこのアンテナ装置の使用方法

(57)【要約】
アモルファスフレークまたはナノ結晶フレークとプラスチック鋳造材とを含んだ複合材から成る磁気コアを用いてエネルギーを誘導伝送するためのアンテナ装置であって、効率的なエネルギー伝送に適した磁気特性を、高い破壊靭性と小サイズとを実現したうえで生じさせることができる。

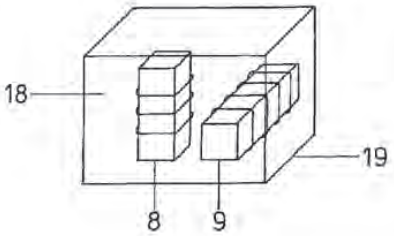

【特許請求の範囲】

【請求項１】

磁気コア（１，５，１４）と巻線（２，３，４，７，１０，１６）とを備えた、エネルギーを誘導伝送する際に使用するためのアンテナ装置であって、磁気コア（１，５，１４）が、複合材として、微細分散粒子から成る軟磁性成分とプラスチック成分とを含み、且つ磁気コア（１，５，１４）が、２０～２００の有効初透磁率と、０．６Ｔよりも大きな飽和磁気誘導とを有しているアンテナ装置。

【請求項２】

軟磁性成分がアモルファス材またはナノ結晶材を含んでいる、請求項１に記載のアンテナ装置。

【請求項３】

軟磁性成分が表面層により個々に電気的に絶縁されている粒子から成っている、請求項１または２に記載のアンテナ装置。

【請求項４】

粒径が２ｍｍよりも小さい、請求項３に記載のアンテナ装置。

【請求項５】

粒子厚が０．５ｍｍよりも小さい、請求項３または４に記載のアンテナ装置。

【請求項６】

粒子が表面酸化またはプラスチックコーティングされている、請求項３から５までのいずれか一つに記載のアンテナ装置。

【請求項７】

プラスチック成分が注型樹脂技術で加工可能な熱可塑性樹脂または熱硬化性樹脂を含んでいる、請求項１から６までのいずれか一つに記載のアンテナ装置。

【請求項８】

磁気コア（１，５，１４）と巻線（２，３，４，７，１０，１６）とにより形成されるアンテナが、２０ｋｈｚ～１５０ｋｈｚの周波数範囲で５０よりも大きなゲインを有している、請求項１から７までのいずれか一つに記載のアンテナ装置。

【請求項９】

磁気コア（１，５，１４）が少なくとも２０μＷｂの磁束まで負荷可能である、請求項１から８までのいずれか一つに記載のアンテナ装置。

【請求項１０】

同じ磁気コア（１，５，１４）に複数の巻線（２，３，４，７，１０，１６）を備え、これら巻線の縦軸線（２０，２１）が互いに０°よりも大きな角度で配置されている、請求項１から９までのいずれか一つに記載のアンテナ装置。

【請求項１１】

複数個の磁気コア（１，５，１４）が複数の巻線（２，３，４，７，１０，１６）を担持し、個々の磁気コア（１，５，１４）の放射パターンが異なる形状および／または指向性を持っている、請求項１から１０までのいずれか一つに記載のアンテナ装置。

【請求項１２】

複数個の磁気コア（１，５，１４）のうちの少なくとも１つに、電子部品を受容するための凹部（１５）が設けられている、請求項１から１１までのいずれか一つに記載のアンテナ装置。

【請求項１３】

請求項１から１２までのいずれか一つに記載のアンテナ装置を誘導エネルギー伝送に使用する使用方法。

【請求項１４】

固定機と誘導受信装置を備えた移動機との間で誘導エネルギー伝送するために使用する、請求項１３に記載の使用方法。

【請求項１５】

移動機（１７）内に配置されるエネルギー蓄積装置を充電するために使用する、請求項

１４に記載のアンテナ装置の使用方法。
【請求項１６】
エネルギーを移動機から固定機へ誘導伝送するために使用する、請求項１３に記載のアンテナ装置の使用方法。
【請求項１７】
異なる巻線（２，３，４，７，１０，１６）を位相をずらして同時に、または、時間的に交互に制御する、請求項１０または１１に記載のアンテナ装置の作動方法。
【発明の詳細な説明】
【技術分野】
【０００１】
本発明は、開放型磁気コアと巻線とを備えたアンテナ装置に関する。
【背景技術】
【０００２】
本発明は、誘導エネルギー伝送に利用される磁場アンテナの分野に属する。エネルギーおよび情報を電気双極子または磁気双極子を用いて伝送することは基本的に可能である。この場合、制御回路に応じて、電磁波が発生する場合も主として電場または磁場だけが発生する場合もある。たとえばアンテナ周辺の有機組織への影響を避けるには、電磁波を放射するのではなく、磁場の発生に限定するのが望ましい場合がある。特に、磁場の放射或いは磁気アンテナに対する誘導結合により、比較的高いエネルギーを電気結合なしに伝送させることができる。この種の結合の作用はほぼ１ｍ以下の狭い空間範囲に限られている。それにもかかわらず、この種の伝送には種々の適用可能性がある。
【０００３】
その際、原理的には、圧縮磁気コアとして通常の軟質フェライト以外に周知の軟磁性粉末複合材を使用することができる。軟磁性粉末複合材はたとえば鉄粉から成ることができる。この種の磁気コアにより、およそ１０～３０の有効透磁率を達成できる。これに対応して達成可能な飽和磁気誘導はおよそ１．０Ｔないし１．４Ｔ程度である。さらに、軟磁性結晶質の鉄・アルミニウム・珪素合金と鉄・ニッケル合金とから成る粉末複合材が知られており、この粉末複合材により１００ｋＨｚを越える程度の適用周波数を達成できる。
【０００４】
この種の複合材およびフェライトの欠点は、圧縮技術が簡単な幾何学的形状しか可能にしないこと、生じる磁気コアは比較的もろく、破損の危険があることである。さらに、対応する磁気特性は温度に強く依存しており、共振回路の使用を困難にしている。
【０００５】
独国特許出願公開第１９８４６７８１Ａ１号明細書からは、射出成形可能なプラスチックとナノ結晶合金から射出成形方法で製造される磁気コアが知られている。
【０００６】
対応するナノ結晶合金は、たとえば欧州特許出願公開第０２７１６５７Ａ２号明細書および欧州特許出願公開第０４５５１１３Ａ２号明細書から知られている。この種の合金はたとえば高速固化技術を用いて薄い合金帯の形状で製造され、合金帯は当初非晶質であるが、ナノ結晶構造を生成させるために熱処理される。この種の合金は２ｍｍよりも小さな粉径を持つ合金粉に粉砕することができる。特に、１個の粒子につき０．０１ｍｍ～０．０４ｍｍの厚さと０．０４ｍｍ～１ｍｍの幅または長さとを持ついわゆるフレークが発生する。このフレークは合成樹脂を用いて複合材へ加工することができ、加工した複合材においては、０．５テスラよりも大きな飽和磁化と、１０～２００の透磁率とを実現できる。この種の磁気コアの製造方法はたとえば国際公開第０１９１１４１Ａ１号パンフレットに示されている。
【０００７】
欧州特許出願公開第０７６２５３５Ａ１号明細書からは、トランスポンダ用のアンテナが知られている。このアンテナも同様に軟磁性の粉末複合材から成り、たとえばアモルファス合金から成っている。そこでは、この種のアンテナは情報交換用に使用されている。

この場合重要なことは、数メートルの空間範囲内で情報交換がフェールセーフ動作すること、およびアンテナ周辺の金属対象物に対する故障発生度が少ないことである。

【発明の開示】

【発明が解決しようとする課題】

【０００８】

そこで、本発明の課題は、エネルギーを誘導伝送する際に使用するアンテナ装置を提供することである。

【課題を解決するための手段】

【０００９】

本発明は、近接場範囲内での効率的なエネルギー伝送と、エネルギーを誘導的に伝達させる対象である受信機に対するアンテナ装置の正確な位置決めに関係のない信頼性のある動作とを目的としている。このためには特定の磁気特性を設定する必要があり、特に適切な放射パターンを備えた十分な磁束を設定することがアンテナ装置においては必要である。

【００１０】

この種のアンテナ装置を用いることにより、送信機から受信機へほぼ０．５ｃｍ～５０ｃｍの距離にわたっておよそ１Ｗ～１００Ｗのパワーを伝送させる必要がある。その適用例は、ワイヤーレスで一時的にまたは継続的にエネルギーを供給しなければならないすべての機器である。この場合、もっぱら誘導結合であるために、１０ｋｈｚ～１５０ｋｈｚの周波数範囲がこの周波数帯の可用性と次元的境界条件との故に特に適している。さらに、少なくとも２０μＷｂの磁束が磁気コア内に実現されるべきである。

【００１１】

本アンテナ装置において使用されるようなアンテナは、ほとんどの場合共振回路の誘導部分であるので、エネルギー放射を最適化するには、動作周波数の範囲で少なくとも５０の高いアンテナフィールドゲイン、有利には１００のアンテナフィールドゲインが望ましい。さらに、温度に依存しない透磁率が必要である。このような透磁率は、最適な磁束案内のために３０と２００の間にある。透磁率がこれよりも高ければ、コア内での磁束の集束性が優って、非常にわずかな磁束成分しかコアから側方へ流出せず、コアに沿った場の強さ、すなわち受信機範囲内での場の強さがかなり不均一になる。

【００１２】

本発明の基礎となっている課題は、公知の磁気装置、磁気コア、材料では満足に解決することはできない。

【００１３】

前記課題は、本発明によれば、請求項１に記載の装置と、この種の装置を請求項１３にしたがって使用する使用方法とにより解決される。本発明の思想の構成および更なる改良形は従属項の対象である。

【００１４】

本発明によれば、磁気コアは、複合材として、微細分散粒子から成る軟磁性成分とプラスチック成分とを含み、この場合磁気コアは、２０～２００の有効初透磁率と、０．６Ｔを超える飽和磁気誘導とを有している。

【００１５】

軟磁性成分は、ナノ結晶材から成るすでに述べたフレークから構成されているのが有利である。ナノ結晶材はおよそ１Ｔ～１．６Ｔの飽和磁化と、３０，０００を超える透磁率とを有している。プラスチック成分と混合させることにより、磁気回路はフレーク間の顕微鏡的隙間によって中断され、高いゲインと温度一定のもとで３０ないし１００のより低い有効透磁率が生じる。それにもかかわらず、０．６Ｔよりも大きな達成可能な高い磁束密度、典型的には０．９Ｔよりも大きな磁束密度も得られる。さらに、磁気コアの軟磁性成分は、粒子がそれぞれ個別に表面層により電気的に絶縁されているという性質を持っているのが有利である。これはたとえば表面酸化またはプラスチックコーティングにより実現されていることができる。粒径は２ｍｍ以下であるのが有利であり、この場合粒子厚は

０．５ｍｍよりも小さくてよい。粒子をこのように構成することにより、特に少ないヒステリシス損が達成され、よってアンテナの特に高いゲインが達成される。機械的特性は、使用するプラスチックの種類および成分量に応じて、破壊靭性および可撓性並びにその温度依存性に関し調整可能である。

【００１６】

プラスチック成分としては、一般的に、注型樹脂技術の枠内で加工可能なポリアミド、ポリアクリラート、ポリアセテート、ポリイミドのようなすべての熱可塑性樹脂または熱硬化性樹脂、或いはエポキシ樹脂を、所望の機械的特性および熱的特性に応じて選択することができる。

【００１７】

最も簡単なケースでは、アンテナ装置は、磁気コアとして、巻線部を備えた棒または板を有している。装置をエネルギーの効率的な伝送のために使用できるようにするには、特定のコア横断面が必要である。コア内に少なくとも２０μＷｂの平均磁束を達成させる場合には、０．５ｃｍ$^2$の横断面で４００ｍＴの誘導が生じる。これは、軟質フェライトを使用する際に必要な横断面のほぼ半分に相当する。

【００１８】

この場合、磁束を高めるために磁気コアを効率的に利用できるようにするには、巻線のコイル長は巻線の径以上、好ましくは径よりも大きくするべきである。本発明にしたがって使用される材料の主要な性質は、衝撃または振動に対して機械的に不感性であり、且つ製造にあたっての自由な成形性或いは爾後の可撓性である。本発明にしたがって使用される材料は、その磁気的性質の故に、コスト上の理由、スペース上の理由、デザイン上の理由から多くの適用分野において望ましいような小型のサイズを可能にする。

【００１９】

アンテナ装置の所望の放射パターンまたは磁束案内を実現するには、同じ磁気コアに複数の巻線が配置され、これら巻線の縦軸線が互いに０°を超える角度、たとえば９０°の角度にあるのが有利である。同時に、誘導エネルギー伝送が種々の位置で受信機に及ぶようにするには、前記巻線は位相をずらして、或いは交互に制御されてよい。これによりエネルギー伝送はより確実になり、送信機と受信機との相対位置に関しいっそう影響を受けなくなる。なお本発明は、異なる巻線を間欠的に作動するようにした、或いは、前述のように異なる巻線を位相をずらして同時に制御するようにした、本発明によるアンテナ装置の種々の作動態様にも関わる。

【００２０】

このように送信機と受信機との位置決めに際し許容度を大きくするため、前述のような種類の異なる磁気コアの上に複数の巻線を設けることも考えられる。この場合、個々の磁気コアの放射パターンは形状または指向性に関し異なっている。この処置によっても、送信されたエネルギーの受信機の最適な位置決め範囲が拡大される。

【００２１】

加えて、本発明によるアンテナ装置は、省スペースも志向しているため、たとえばアンテナ装置の制御回路のような電子部品を収納することができる凹部を磁気コア内部に設けることは意義深い。このような凹部により、もし凹部が大きすぎなければ、磁気コア内部での磁束案内が阻害されることはほとんどない。さらに、前記制御回路を備えたアンテナ装置を予め製作して一体の構成ユニットとして機器内に簡単に取り付けることができるので有利である。

【発明を実施するための最良の形態】

【００２２】

次に、本発明を図面に図示した実施形態を用いてより詳細に説明する。

【００２３】

図１は巻線部２を備えた扁平な磁気コア１を示しており、この場合磁気コアのサイズはたとえば２０×１０×０．２ｃｍである。コアの基面は、受信機の目標とする受信可能域ほどの大きさであるのが好ましい。巻線の構成により、たとえば巻き方を巻線端部へ向か

うにしたがって密にすることにより、コア面にわたって可能な限り均一な強さの磁束密度が生じる。磁束指向性および放射パターンを特殊に構成するために、図２は、ほぼ正方形の板として構成した磁気コア５の上に直交軸２０，２１に対して互いに垂直に配置した２つの巻線３，４の組み合わせを示している。両巻線は交互に順次制御することができ、或いは、互いに位相をずらして同時に制御することができる。

【００２４】

プラスチック成分を適宜選定することにより、図１または図２の装置全体を可撓性とすることができる。しかし、いずれの場合も、たとえばフェライトコアを備えたアンテナまたは他の通常の材料から成るコアを備えたアンテナよりも破損に強いであろう。

【００２５】

エネルギーを移動受信機へ伝送するために特に適しているのは、図３に示した、棒状の磁気コアを備えた装置であり、この場合移動方向は（受信機のアンテナも）巻線７の縦軸線６に対し平行である。

【００２６】

図６には２つの異なる磁気コア８，９が図示されており、これらの磁気コアは、異なる磁束密度および放射パターンを可能にするため、それぞれ別個の巻線を有し、且つその縦軸線は互いに垂直である。これは、ただ１つの磁気コアの上に複数の巻線部を備える図２に図示した実施形態に対する択一的な実施形態である。

【００２７】

図４に示した装置では、巻線１０が磁気コア１１を貫通しているという点で巻線１０が当該磁性体１１に一体に組み込まれており、その結果図４においては磁気コア１１の下部部分は磁束を下面で短絡させるヨークを形成している。これにより且つ磁極片１２，１３により、一方向（下方）への遮蔽作用が達成され、それにもかかわらず優れた上方放射が達成される。

【００２８】

この種の装置を製造するには、磁気コアの製作の際に巻線を一緒に鋳込むことができるようにした、前記国際公開第０１９１１４１Ａ１号パンフレットに記載の鋳造方法が特に適している。

【００２９】

図５は磁気コア１４内の凹部１５を示している。凹部１５はそこに電子回路、たとえば巻線１６を制御するための電子回路の構成要素を収納することを可能にさせる。

【００３０】

図６は、たとえば移動電話またはコードレス電話１７のような移動通信端末機を備えた本発明によるアンテナ装置の適用例を示している。移動通信端末機はアンテナ装置１８との誘導結合のための詳細には図示していない受信装置を備えている。アンテナ装置１８はケーシング１９内に２つの磁気コア８，９を有しており、これらの磁気コア８，９はそれぞれ巻線部を備えており、誘導的にエネルギーを端末機１７内の受信機に伝送させることができる。端末機１７内には、受信機以外に、伝送されたエネルギーを蓄積するためのコンデンサまたはアキュムレータが設けられている。

【００３１】

以上説明したアンテナ装置はエネルギー伝送用に特殊化されているが、同じアンテナ装置をたとえば信号のような情報の返送にも用いることができる。この信号は、送受信を切換えて同様に誘導的に伝達されるか、或いは、受信機のエネルギー受信量を価値判断することによって伝達される。

【００３２】

移動機から固定機へエネルギーを伝送させる際に本発明を使用することも考えられる。たとえば鉄道技術において、信号および／またはエネルギーを車両に固定の機器から交通監視用の制御室／信号扱い所の定置センサへ伝送させるために使用できる。

【図面の簡単な説明】

【００３３】

【図１】１つの巻線部を備えた磁気コアの板状角形構成の実施例の斜視図である。
【図２】２つの巻線部を備えた対応する磁気コアの実施例の斜視図である。
【図３】１つの巻線部を備えた棒状磁気コアの実施例の斜視図である。
【図４】巻線部と磁極片とを一体に組み込んだ棒状磁気コアの実施例の斜視図である。
【図５】１つの凹部を備えた磁気コアの実施例の斜視図である。
【図６】２つの磁気コアを備えたアンテナ装置の適用例の斜視図である。
【符号の説明】
【００３４】
１　磁気コア
２　巻線部
３，４，７，１０，１６　巻線
５，８，１１，１４　磁気コア
６　巻線の縦軸線
１２，１３　磁極片
１５　凹部
１７　移動電話またはコードレス電話のような移動通信端末機
１８　アンテナ装置
１９　ケーシング

【図１】
FIG 1

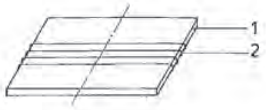


【図２】
FIG 2

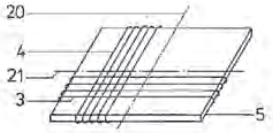


【図３】
FIG 3

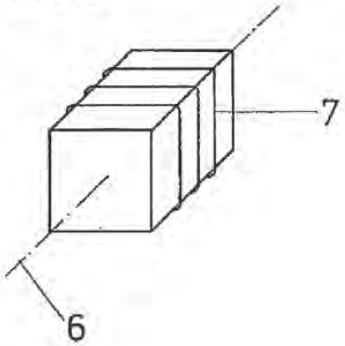

【図４】

FIG 4

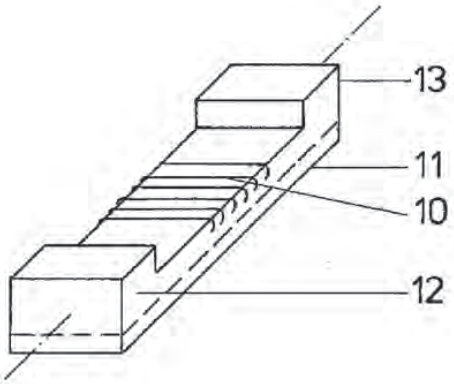


【図６】

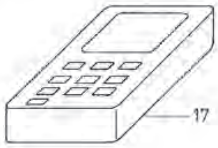


FIG 6

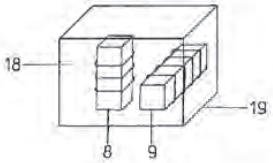


【図５】

FIG 5

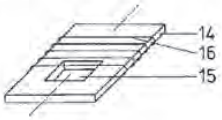

【国際調査報告】

# INTERNATIONAL SEARCH REPORT

PCT/EP2005/005271

**A. CLASSIFICATION OF SUBJECT MATTER**

IPC 7 H01Q7/06 H02J7/02 H01F38/14

According to International Patent Classification (IPC) or to both national classification and IPC

**B. FIELDS SEARCHED**

Minimum documentation searched (classification system followed by classification symbols)

IPC 7 H01Q H02J H01F G06K G01S

Documentation searched other than minimum documentation to the extent that such documents are included in the fields searched

Electronic data base consulted during the international search (name of data base and, where practical, search terms used)

EPO-Internal, PAJ, WPI Data

**C. DOCUMENTS CONSIDERED TO BE RELEVANT**

| Category * | Citation of document, with indication, where appropriate, of the relevant passages | Relevant to claim No. |
|---|---|---|
| Y | US 2003/210106 A1 (CHENG LILY KA LAI ET AL) 13 November 2003 (2003-11-13) abstract; figures 4a-4c,6a-9c,12a,12b paragraphs '0005!, '0021!, '0025!, '0036! - '0039!, '0045! - '0049!, '0051!, '0052!, '0054!, '0057!, '0065!, '0074!, '0115!, '0117!, '0119! paragraphs '0206!, '0209!, '222212!, '0213! | 1-16 |

-/--

[X] Further documents are listed in the continuation of box C.

[X] Patent family members are listed in annex.

* Special categories of cited documents :

"A" document defining the general state of the art which is not considered to be of particular relevance

"E" earlier document but published on or after the international filing date

"L" document which may throw doubts on priority claim(s) or which is cited to establish the publication date of another citation or other special reason (as specified)

"O" document referring to an oral disclosure, use, exhibition or other means

"P" document published prior to the international filing date but later than the priority date claimed

"T" later document published after the international filing date or priority date and not in conflict with the application but cited to understand the principle or theory underlying the invention

"X" document of particular relevance; the claimed invention cannot be considered novel or cannot be considered to involve an inventive step when the document is taken alone

"Y" document of particular relevance; the claimed invention cannot be considered to involve an inventive step when the document is combined with one or more other such documents, such combination being obvious to a person skilled in the art.

"&" document member of the same patent family

| Date of the actual completion of the international search | Date of mailing of the international search report |
|---|---|
| 1 August 2005 | 08/08/2005 |
| Name and mailing address of the ISA<br>European Patent Office, P.B. 5818 Patentlaan 2<br>NL – 2280 HV Rijswijk<br>Tel. (+31-70) 340-2040, Tx. 31 651 epo nl,<br>Fax: (+31-70) 340-3016 | Authorized officer<br>Jäschke, H |

Form PCT/ISA/210 (second sheet) (January 2004)

## INTERNATIONAL SEARCH REPORT

PCT/EP2005/005271

C.(Continuation) DOCUMENTS CONSIDERED TO BE RELEVANT

| Category * | Citation of document, with indication, where appropriate, of the relevant passages | Relevant to claim No. |
|---|---|---|
| Y | WO 01/91141 A (VACUUMSCHMELZE GMBH & CO. KG; BRUNNER, MARKUS)<br>29 November 2001 (2001-11-29)<br>cited in the application<br>abstract; figures 1-3<br>page 1, line 14 - line 20<br>page 1, line 32 - line 35<br>page 4, line 1 - line 4<br>page 4, line 27 - line 29<br>page 10, line 4 - line 25<br>page 11, line 5 - line 30 | 1-16 |
| A | WO 02/101763 A (VACUUMSCHMELZE GMBH; BRUNNER, MARKUS)<br>19 December 2002 (2002-12-19)<br>the whole document | 1-9 |

Form PCT/ISA/210 (continuation of second sheet) (January 2004)

## INTERNATIONAL SEARCH REPORT

PCT/EP2005/005271

| Patent document cited in search report | Publication date | Patent family member(s) | Publication date |
|---|---|---|---|
| US 2003210106 A1 | 13-11-2003 | AU 2003233895 A1 | 11-11-2003 |
| | | AU 2003240999 A1 | 11-11-2003 |
| | | EP 1506605 A2 | 16-02-2005 |
| | | EP 1506554 A1 | 16-02-2005 |
| | | GB 2398176 A | 11-08-2004 |
| | | WO 03096512 A2 | 20-11-2003 |
| | | WO 03096361 A1 | 20-11-2003 |
| | | GB 2388715 A ,B | 19-11-2003 |
| | | GB 2388716 A ,B | 19-11-2003 |
| | | GB 2399225 A ,B | 08-09-2004 |
| | | GB 2399226 A ,B | 08-09-2004 |
| | | GB 2399227 A | 08-09-2004 |
| | | GB 2399228 A | 08-09-2004 |
| | | GB 2399229 A | 08-09-2004 |
| | | GB 2399230 A ,B | 08-09-2004 |
| | | US 2005135122 A1 | 23-06-2005 |
| | | US 2005140482 A1 | 30-06-2005 |
| | | US 2005116683 A1 | 02-06-2005 |
| WO 0191141 A | 29-11-2001 | DE 10024824 A1 | 29-11-2001 |
| | | DE 50103010 D1 | 02-09-2004 |
| | | WO 0191141 A1 | 29-11-2001 |
| | | EP 1282903 A1 | 12-02-2003 |
| | | JP 2003534656 T | 18-11-2003 |
| | | US 2003156000 A1 | 21-08-2003 |
| WO 02101763 A | 19-12-2002 | DE 10128004 A1 | 19-12-2002 |
| | | WO 02101763 A1 | 19-12-2002 |
| | | EP 1393330 A1 | 03-03-2004 |
| | | JP 2004529508 T | 24-09-2004 |
| | | US 2004183643 A1 | 23-09-2004 |

Form PCT/ISA/210 (patent family annex) (January 2004)

## INTERNATIONALER RECHERCHENBERICHT

PCT/EP2005/005271

**A. KLASSIFIZIERUNG DES ANMELDUNGSGEGENSTANDES**

IPK 7 H01Q7/06 H02J7/02 H01F38/14

Nach der Internationalen Patentklassifikation (IPK) oder nach der nationalen Klassifikation und der IPK

**B. RECHERCHIERTE GEBIETE**

Recherchierter Mindestprüfstoff (Klassifikationssystem und Klassifikationssymbole)

IPK 7 H01Q H02J H01F G06K G01S

Recherchierte aber nicht zum Mindestprüfstoff gehörende Veröffentlichungen, soweit diese unter die recherchierten Gebiete fallen

Während der internationalen Recherche konsultierte elektronische Datenbank (Name der Datenbank und evtl. verwendete Suchbegriffe)

EPO-Internal, PAJ, WPI Data

**C. ALS WESENTLICH ANGESEHENE UNTERLAGEN**

| Kategorie* | Bezeichnung der Veröffentlichung, soweit erforderlich unter Angabe der in Betracht kommenden Teile | Betr. Anspruch Nr. |
|---|---|---|
| Y | US 2003/210106 A1 (CHENG LILY KA LAI ET AL) 13. November 2003 (2003-11-13) Zusammenfassung; Abbildungen 4a-4c,6a-9c,12a,12b Absätze '0005!, '0021!, '0025!, '0036! - '0039!, '0045! - '0049!, '0051!, '0052!, '0054!, '0057!, '0065!, '0074!, '0115!, '0117!, '0119! Absätze '0206!, '0209!, '222212!, '0213! | 1-16 |

-/-

[X] Weitere Veröffentlichungen sind der Fortsetzung von Feld C zu entnehmen

[X] Siehe Anhang Patentfamilie

* Besondere Kategorien von angegebenen Veröffentlichungen :

"A" Veröffentlichung, die den allgemeinen Stand der Technik definiert, aber nicht als besonders bedeutsam anzusehen ist

"E" ältere Dokument, das jedoch erst am oder nach dem internationalen Anmeldedatum veröffentlicht worden ist

"L" Veröffentlichung, die geeignet ist, einen Prioritätsanspruch zweifelhaft erscheinen zu lassen, oder durch die das Veröffentlichungsdatum einer anderen im Recherchenbericht genannten Veröffentlichung belegt werden soll oder die aus einem anderen besonderen Grund angegeben ist (wie ausgeführt)

"O" Veröffentlichung, die sich auf eine mündliche Offenbarung, eine Benutzung, eine Ausstellung oder andere Maßnahmen bezieht

"P" Veröffentlichung, die vor dem internationalen Anmeldedatum, aber nach dem beanspruchten Prioritätsdatum veröffentlicht worden ist

"T" Spätere Veröffentlichung, die nach dem internationalen Anmeldedatum oder dem Prioritätsdatum veröffentlicht worden ist und mit der Anmeldung nicht kollidiert, sondern nur zum Verständnis des der Erfindung zugrundeliegenden Prinzips oder der ihr zugrundeliegenden Theorie angegeben ist

"X" Veröffentlichung von besonderer Bedeutung; die beanspruchte Erfindung kann allein aufgrund dieser Veröffentlichung nicht als neu oder auf erfinderischer Tätigkeit beruhend betrachtet werden

"Y" Veröffentlichung von besonderer Bedeutung; die beanspruchte Erfindung kann nicht als auf erfinderischer Tätigkeit beruhend betrachtet werden, wenn die Veröffentlichung mit einer oder mehreren anderen Veröffentlichungen dieser Kategorie in Verbindung gebracht wird und diese Verbindung für einen Fachmann naheliegend ist

"&" Veröffentlichung, die Mitglied desselben Patentfamilie ist

| Datum des Abschlusses der internationalen Recherche | Absendedatum des internationalen Recherchenberichts |
|---|---|
| 1. August 2005 | 08/08/2005 |
| **Name und Postanschrift der Internationalen Recherchenbehörde** | **Bevollmächtigter Bediensteter** |
| Europäisches Patentamt, P.B. 5818 Patentlaan 2<br>NL - 2280 HV Rijswijk<br>Tel. (+31-70) 340-2040, Tx. 31 651 epo nl,<br>Fax: (+31-70) 340-3016 | Jäschke, H |

Formblatt PCT/ISA/210 (Blatt 2) (Januar 2004)

## INTERNATIONALER RECHERCHENBERICHT

PCT/EP2005/005271

C.(Fortsetzung) ALS WESENTLICH ANGESEHENE UNTERLAGEN

| Kategorie* | Bezeichnung der Veröffentlichung, soweit erforderlich unter Angabe der in Betracht kommenden Teile | Betr. Anspruch Nr. |
|---|---|---|
| Y | WO 01/91141 A (VACUUMSCHMELZE GMBH & CO. KG; BRUNNER, MARKUS)<br>29. November 2001 (2001-11-29)<br>in der Anmeldung erwähnt<br>Zusammenfassung; Abbildungen 1-3<br>Seite 1, Zeile 14 - Zeile 20<br>Seite 1, Zeile 32 - Zeile 35<br>Seite 4, Zeile 1 - Zeile 4<br>Seite 4, Zeile 27 - Zeile 29<br>Seite 10, Zeile 4 - Zeile 25<br>Seite 11, Zeile 5 - Zeile 30 | 1-16 |
| A | WO 02/101763 A (VACUUMSCHMELZE GMBH; BRUNNER, MARKUS)<br>19. Dezember 2002 (2002-12-19)<br>das ganze Dokument | 1-9 |

Formblatt PCT/ISA/210 (Fortsetzung von Blatt 2) (Januar 2004)

## INTERNATIONALER RECHERCHENBERICHT

PCT/EP2005/005271

| Im Recherchenbericht angeführtes Patentdokument | Datum der Veröffentlichung | Mitglied(er) der Patentfamilie | Datum der Veröffentlichung |
|---|---|---|---|
| US 2003210106 A1 | 13-11-2003 | AU 2003233895 A1 | 11-11-2003 |
| | | AU 2003240999 A1 | 11-11-2003 |
| | | EP 1506605 A2 | 16-02-2005 |
| | | EP 1506554 A1 | 16-02-2005 |
| | | GB 2398176 A | 11-08-2004 |
| | | WO 03096512 A2 | 20-11-2003 |
| | | WO 03096361 A1 | 20-11-2003 |
| | | GB 2388715 A ,B | 19-11-2003 |
| | | GB 2388716 A ,B | 19-11-2003 |
| | | GB 2399225 A ,B | 08-09-2004 |
| | | GB 2399226 A ,B | 08-09-2004 |
| | | GB 2399227 A | 08-09-2004 |
| | | GB 2399228 A | 08-09-2004 |
| | | GB 2399229 A | 08-09-2004 |
| | | GB 2399230 A ,B | 08-09-2004 |
| | | US 2005135122 A1 | 23-06-2005 |
| | | US 2005140482 A1 | 30-06-2005 |
| | | US 2005116683 A1 | 02-06-2005 |
| WO 0191141 A | 29-11-2001 | DE 10024824 A1 | 29-11-2001 |
| | | DE 50103010 D1 | 02-09-2004 |
| | | WO 0191141 A1 | 29-11-2001 |
| | | EP 1282903 A1 | 12-02-2003 |
| | | JP 2003534656 T | 18-11-2003 |
| | | US 2003156000 A1 | 21-08-2003 |
| WO 02101763 A | 19-12-2002 | DE 10128004 A1 | 19-12-2002 |
| | | WO 02101763 A1 | 19-12-2002 |
| | | EP 1393330 A1 | 03-03-2004 |
| | | JP 2004529508 T | 24-09-2004 |
| | | US 2004183643 A1 | 23-09-2004 |

フロントページの続き

(81)指定国 AP(BW,GH,GM,KE,LS,MW,MZ,NA,SD,SL,SZ,TZ,UG,ZM,ZW),EA(AM,AZ,BY,KG,KZ,MD,RU,TJ,TM),EP(AT,BE,BG,CH,CY,CZ,DE,DK,EE,ES,FI,FR,GB,GR,HU,IE,IS,IT,LT,LU,MC,NL,PL,PT,RO,SE,SI,SK,TR),OA(BF,BJ,CF,CG,CI,CM,GA,GN,GQ,GW,ML,MR,NE,SN,TD,TG),AE,AG,AL,AM,AT,AU,AZ,BA,BB,BG,BR,BW,BY,BZ,CA,CH,CN,CO,CR,CU,CZ,DK,DM,DZ,EC,EE,EG,ES,FI,GB,GD,GE,GH,GM,HR,HU,ID,IL,IN,IS,JP,KE,KG,KM,KP,KR,KZ,LC,LK,LR,LS,LT,LU,LV,MA,MD,MG,MK,MN,MW,MX,MZ,NA,NG,NI,NO,NZ,OM,PG,PH,PL,PT,RO,RU,SC,SD,SE,SG,SK,SL,SM,SY,TJ,TM,TN,TR,TT,TZ,UA,UG,US,UZ,VC,VN,YU,ZA,ZM,ZW

(12) INTERNATIONAL APPLICATION PUBLISHED UNDER THE PATENT COOPERATION TREATY (PCT)

(19) World Intellectual Property Organization
International Bureau

(43) International Publication Date
22 February 2007 (22.02.2007)

PCT

(10) International Publication Number
WO 2007/020583 A2

(51) International Patent Classification: Not classified

(21) International Application Number: PCT/IB2006/052783

(22) International Filing Date: 11 August 2006 (11.08.2006)

(25) Filing Language: English

(26) Publication Language: English

(30) Priority Data:
11/204,820 16 August 2005 (16.08.2005) US

(71) Applicant (*for all designated States except US*): **ACCESS BUSINESS GROUP INTERNATIONAL LLC** [US/US]; 7575 Fulton Street East, Ada, MI 49355 (US).

(72) Inventors; and
(75) Inventors/Applicants (*for US only*): **BAARMAN, David, W** [US/US]; 6414 - 127th Avenue, Fennville, MI 49408 (US). **STIEN, Nathan, P.** [US/US]; 127 East Hines Place, Apt. B4, Peoria, IL 61614 (US). **BACHMAN, Wesley, J.** [US/US]; 48 Sugar Creek Hills, Auburn, IL 62615 (US). **LORD, John, James** [US/US]; 3106 Hazlett Road, Springfield, IL 62707 (US).

(74) Agents: **WOOD, J., Ray** et al.; Warner Norcross & Judd LLP, 900 Fifth Third Center, 111 Lyon Street, N.W., Grand Rapids, MI 49503-2487 (US).

(81) Designated States (*unless otherwise indicated, for every kind of national protection available*): AE, AG, AL, AM, AT, AU, AZ, BA, BB, BG, BR, BW, BY, BZ, CA, CH, CN, CO, CR, CU, CZ, DE, DK, DM, DZ, EC, EE, EG, ES, FI, GB, GD, GE, GH, GM, HN, HR, HU, ID, IL, IN, IS, JP, KE, KG, KM, KN, KP, KR, KZ, LA, LC, LK, LR, LS, LT, LU, LV, LY, MA, MD, MG, MK, MN, MW, MX, MZ, NA, NG, NI, NO, NZ, OM, PG, PH, PL, PT, RO, RS, RU, SC, SD, SE, SG, SK, SL, SM, SY, TJ, TM, TN, TR, TT, TZ, UA, UG, US, UZ, VC, VN, ZA, ZM, ZW.

(84) Designated States (*unless otherwise indicated, for every kind of regional protection available*): ARIPO (BW, GH, GM, KE, LS, MW, MZ, NA, SD, SL, SZ, TZ, UG, ZM, ZW), Eurasian (AM, AZ, BY, KG, KZ, MD, RU, TJ, TM), European (AT, BE, BG, CH, CY, CZ, DE, DK, EE, ES, FI, FR, GB, GR, HU, IE, IS, IT, LT, LU, LV, MC, NL, PL, PT, RO, SE, SI, SK, TR), OAPI (BF, BJ, CF, CG, CI, CM, GA, GN, GQ, GW, ML, MR, NE, SN, TD, TG).

**Published:**
— *without international search report and to be republished upon receipt of that report*

*[Continued on next page]*

(54) Title: INDUCTIVE POWER SUPPLY, REMOTE DEVICE POWERED BY INDUCTIVE POWER SUPPLY AND METHOD FOR OPERATING SAME

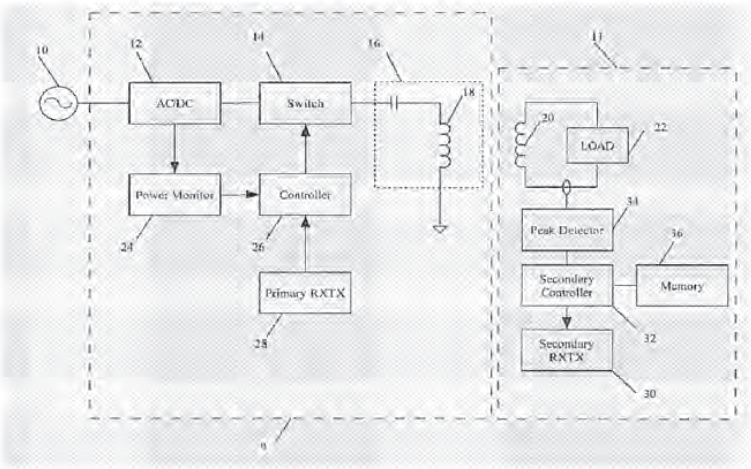


(57) Abstract: An inductive power supply includes a transceiver for sending information between the remote device and the inductive power supply. The remote device determines the actual voltage and then sends a command to the inductive power supply to change the operating frequency if the actual voltage is different from the desired voltage. In order to determine the actual voltage, the remote device determines a peak voltage and then applies a correction factor.

WO 2007/020583 A2

*For two-letter codes and other abbreviations, refer to the "Guidance Notes on Codes and Abbreviations" appearing at the beginning of each regular issue of the PCT Gazette.*

# INDUCTIVE POWER SUPPLY, REMOTE DEVICE POWERED BY INDUCTIVE POWER SUPPLY AND METHOD FOR OPERATING SAME

## BACKGROUND OF THE INVENTION

The invention relates to inductive power supplies, and more specifically to a configuration for inductively powering a load based on the power requirement of that load.

Inductively powered remote devices are very convenient. An inductive power supply provides power to a device without direct physical connection. In those devices using inductive power, the device and the inductive power supply are typically designed so that the device works only with one particular type of inductive power supply. This requires that each device have a uniquely designed inductive power supply.

It would be preferable to have an inductive power supply capable of supplying power to a number of different devices.

## SUMMARY OF THE INVENTION

The foregoing deficiencies and other problems presented by conventional inductive charging are resolved by the inductive charging system and method of the present invention.

According to one embodiment, an inductive power supply is comprised of a switch operating at a frequency, a primary energized by the switch, a primary transceiver for receiving frequency change information from a remote device; and a controller for changing the frequency in response to the frequency change information.

According to a second embodiment, a remote device capable of energization by an inductive power supply is comprised of a secondary, a load, a secondary controller for determining the actual voltage across the load; and a secondary transceiver for sending frequency adjustment instructions to the inductive power supply.

According to yet another embodiment, a method of operating an inductive power supply is comprised of energizing a primary at an initial frequency, polling a remote device; and if there is no response from the remote device, turning off the primary.

According to yet another embodiment, a method of operating a remote device, the remote device having a secondary for receiving power at an operating frequency from an inductive

power supply and powering a load, is comprised of comparing a desired voltage with an actual voltage; and sending an instruction to the inductive power supply to correct the actual voltage.

## BRIEF DESCRIPTION OF THE DRAWINGS

FIG. 1 shows a system for inductively powering a remote device.

FIG. 2 is a look-up table for use by the system.

FIG. 3 is a flow chart for the operation of secondary controller.

FIG. 4 is a flow chart for the operation of a primary controller.

## DETAILED DESCRIPTION OF THE DRAWINGS

FIG. 1 shows a system for inductively powering a remote device. AC (alternating current) power supply 10 provides power to inductive power supply 9. DC (direct current) power supply 12 converts AC power to DC power. Switch 14 in turn operates to convert the DC power to AC power. The AC power provided by switch 14 then powers tank circuit 16.

Switch 14 could be any one of many types of switch circuits, such as a half-bridge inverter, a full-bridge inverter, or any other single transistor, two transistor or four transistor switching circuits. Tank circuit 16 is shown as a series resonant tank circuit, but a parallel resonant tank circuit could also be used. Tank circuit 16 includes primary 18. Primary 18 energizes secondary 20, thereby supplying power to load 22. Primary 18 is preferably air-core or coreless.

Power monitor 24 senses the voltage and current provided by DC power supply 12 to switch 14. The output of power monitor 24 is provided to primary controller 26. Primary controller 26 controls the operation of switch 14 as well as other devices. Primary controller 26 can adjust the operating frequency of switch 14 so that switch 14 can operate over a range of frequencies. Primary transceiver 28 is a communication device for receiving data communication from secondary transceiver 30. Secondary controller 32 senses the voltage and current provided to load 22.

Primary transceiver 28 could be any of a myriad of wireless communication devices. It could also have more than one mode of operation so as accommodate different



InductEV, Inc.
Exhibit 1025
Page 1621

secondary transceivers. For example, primary transceiver 28 could allow RFID, IR, 802.11(b), 802.11(g), cellular, or Bluetooth communication.

Primary controller 26 performs several different tasks. It periodically polls power monitor 24 to obtain power information. Primary controller 26 also monitors transceiver 28 for communication from secondary transceiver 30. If controller 26 is not receiving communication from secondary transceiver 30, controller 26 periodically enables the operation of switch 14 for a brief period of time in order to provide sufficient power to any secondary to allow secondary transceiver 30 to be energized. If a secondary is drawing power, then controller 26 controls the operation of switch 14 in order to insure efficient power transfer to load 22, as described in more detail below. Controller 26 is also responsible for routing data packets through primary transceiver 28, as discussed in more detail below. According to one embodiment, controller 26 directs switch 14 to provide power at 30-100 kilohertz (kHz). According to this embodiment. Controller 26 is clocked at 36.864 megahertz (MHz) to provide acceptable frequency resolution while also performing the tasks described above.

Power monitor 24 monitors the AC input current and voltage. Power monitor 24 calculates the mean power consumed by the device. It does so by multiplying instantaneous voltage and current samples to approximate the power consumed. Power monitor 24 also calculates RMS (Root Mean Square) voltage and current, current cresting factor and other diagnostic values. Because the current is non-sinusoidal, the effective power consumed generally differs from the apparent power ($V^{rms} * I^{rms}$).

To increase the accuracy of the power consumption calculation, current samples can be multiplied with values interpolated from the voltage samples. Each voltage/current product is integrated and held for one full AC cycle. It is then divided by the sample rate to obtain the average power over one cycle. After one cycle, the process is repeated.

Power monitor 24 could be a specially designed chip or the power monitor 24 could be a controller with attendant supporting circuitry.



InductEV, Inc.
Exhibit 1025
Page 1622

According to the illustrated embodiment, power monitor 24 references its ground with respect to the neutral side of the AC power line, while primary controller 26 and switch 14 reference a ground based on their own power supply circuitry. As a consequence, the serial link between power monitor 24 and primary controller 26 is bidirectionally optoisolated.

Secondary controller 32 is powered by secondary 20. Secondary 20 is preferably air-core or coreless. Secondary controller 32 may have less computational ability than power monitor 24. Secondary controller 32 monitors the voltage and current with reference to secondary 20, and compares the monitored voltage or current with the target voltage or current required by load 22. The target voltage or current is stored in memory 36. Memory 36 is preferably non-volatile so that the information is not lost at power off. Secondary 32 also requests appropriate changes in the operating frequency of switch 14 by primary controller 26 by way of secondary transceiver 30.

Secondary controller 32 monitors waveforms with a frequency of around 40 KHz (kilohertz). Secondary controller 32 could perform the task of monitoring the waveforms in a manner similar to that of power monitor 24. If so, then peak detector 34 would be optional.

Peak detector 34 determines the peak voltage across secondary 24, load 22 or across any other component within remote device 11.

If secondary controller 32 has insufficient computing power to perform instantaneous current and voltage calculations, then a lookup table could be provided in memory 36. The lookup table includes correction factors indexed by the drive frequency and applied to the voltage observed by peak detector 34 to obtain the actual voltage across secondary 20. Memory 36 could be a 128-byte array in an EEPROM memory of 8-bit correction factors. The correction factors are indexed by the frequency of the current. Secondary controller 32 receives the frequency from controller 26 by way of primary RXTX 28. Alternatively, if secondary controller 32 had more computational ability, it could calculate the frequency. Memory 36 also contains the minimum power consumption information for remote device 11.



InductEV, Inc.
Exhibit 1025
Page 1623

The correction factors are unique for each load. For example, an MP3 player acting as a remote device would have different correction factors than an inductively powered light or an inductive heater. In order to obtain the correction factors, the remote device would be characterized. Characterization consists of applying an AC voltage and then varying the frequency. The true RMS voltage is then obtained by using a voltmeter or oscilloscope. The true RMS voltage is then compared with the peak voltage in order to obtain the correction factor. The correction factors for each frequency is then stored in memory 36. One type of correction factor found to be suitable is a multiplier. The multiplier is found by dividing the true RMS voltage with the peak voltage.

FIG. 2 is a table showing the correction factors for a specific load. When using a PIC18F microcontroller, the PR2 register is used to control the period of the output voltage, and thereby the frequency of the output voltage. The correction factors can range from 0 to 255. The correction factor within the table are 8-bit fixed-point fractions. In order to access the correction factor, the PR2 register for the PIC18F microcontroller is read. The least significant bit is discarded, and that value is then used to retrieve the appropriate correction factor.

It has been found to be effective to match the correction factor with the period. As is well known, the period is the inverse of frequency. Since many microcontrollers such as the PIC18F have a PWM (pulse width modulated) output where the period of the output is dictated by a register, then the lookup table is indexed by the period of the PWM output.

Secondary transceiver 30 could be any of many different types of wireless transceivers, such as an RFID (Radio Frequency Identification), IR (Infra-red), Bluetooth, 802.11(b), 802.11(g), or cellular. If secondary transceiver 30 were an RFID tag, secondary transceiver 30 could be either active or passive in nature.

FIG. 3 shows a flow chart for the operation of secondary controller 32. The peak voltage is read by peak detector 34. Step 100. The frequency of the circuit is then obtained by secondary controller 32 either from controller 26 or by computing the frequency itself. Step 102. The frequency is then used to retrieve the correction factor from memory 36. Step 104. The



InductEV, Inc.
Exhibit 1025
Page 1624

correction factor is then applied to the peak voltage output from peak detector 34 to determine the actual voltage. Step 106.

The actual voltage is compared with the desired voltage stored in memory 36. If the actual voltage is less than a desired voltage, then an instruction is sent to the primary controller to decrease the frequency. Steps 110, 112. If the actual voltage is greater than the desired voltage, then an instruction is sent to the primary controller to increase the frequency. Steps 114, 116.

This change in frequency causes the power output of the circuit to change. If the frequency is decreased so as to move the resonant circuit closer to resonance, then the power output of the circuit is increased. If the frequency is increased, the resonant circuit moves farther from resonance, and thus the output of the circuit is decreased.

Secondary controller 32 then obtains the actual power consumption from primary controller 26. Step 117. If the actual power consumption is less than the minimum power consumption for the load, then controller disables the load and the components enter a quiescent mode. Steps 118, 120.

FIG. 4 is a flow chart for operation of primary controller 26. Primary 18 is energized at a probe frequency. Step 200. The probe frequency could be preset or it could be determined based upon any prior communication with a remote device. According to this embodiment, load 32 periodically writes the operating frequency to memory 36. If secondary 20 is de-energized, and subsequently re-energized, secondary controller retrieves the last recorded operating frequency from memory 36 and transmits that operating frequency to primary controller 26 by way of secondary RXTX 30 and primary RXTX 28. The probe frequency should be such that secondary transceiver 30 would be energized.

The secondary transceiver 30 is then polled. Step 202. The system then waits for a reply. Step 204. If no reply is received, then primary 18 is turned off. Step 206. After a predetermined time, the process of polling the remote device occurs again.

If a reply is received from secondary transceiver 30, then the operating parameters are received from secondary controller 32. Step 208. Operating parameters include, but are not



InductEV, Inc.
Exhibit 1025
Page 1625

limited to initial operating frequency, operating voltage, maximum voltage, and operating current, operating power. Primary controller 26 then enables switch 14 to energize primary 18 at the initial operating frequency. Step 210. Primary controller 26 sends power information to secondary controller 32. Step 212. Primary 18 energizes secondary 20. Primary controller 26 then polls secondary controller 32. Step 214.

If primary controller 26 gets no reply or receives an "enter quiescent mode" command from secondary controller 32, the switch 14 is turned off (step 206), and the process continues from that point.

If primary controller 26 receives a reply, then primary controller 26 extracts any frequency change information from secondary controller 32. Step 218. Primary controller 26 then changes the frequency in accordance with the instruction from secondary controller 32. Step 220. After a delay (step 222), the process repeats by primary controller 26 sending information to secondary controller 32. Step 212.

The above description is of the preferred embodiment. Various alterations and changes can be made without departing from the spirit and broader aspects of the invention as defined in the appended claims, which are to be interpreted in accordance with the principles of patent law including the doctrine of equivalents. Any references to claim elements in the singular, for example, using the articles "a," "an," "the," or "said," is not to be construed as limiting the element to the singular.



InductEV, Inc.
Exhibit 1025
Page 1626

CLAIMS

The embodiments of the invention in which an exclusive property or privilege is claimed are defined as follows:

1. An inductive power supply comprising:

a switch operating at a frequency;

a primary energized by the switch;

a primary transceiver for receiving frequency change information from a remote device; and

a controller for changing the frequency in response to the frequency change information.

2. The inductive power supply of claim 1 further comprising:

a power monitor for determining power consumption information by the inductive power supply.

3. The inductive power supply of claim 2 where the primary transceiver sends the power consumption information to the remote device.

4. The inductive power supply of claim 3 further comprising a tank circuit where the primary is part of the tank circuit.

5. The inductive power supply of claim 4 where the tank circuit is a series resonant tank circuit.

6. The inductive power supply of claim 4where the tank circuit is a parallel resonant tank circuit.

7. A remote device capable of energization by an inductive power supply comprising:

a secondary;

a load;

a secondary controller for determining the actual voltage across the load; and

a secondary transceiver for sending frequency adjustment instructions to the inductive power supply.



InductEV, Inc.
Exhibit 1025
Page 1627

8. The remote device of claim 7 further comprising:

a peak detector.

9. The remote device of claim 8 where the secondary controller determines the actual voltage across the load from a peak detector output.

10. The remote device of claim 9 further comprising:

a memory containing a database, the database having a plurality of values indicative of the actual voltage, the database indexed by the peak detector output.

11. The remote device of claim 10 where the database is also indexed by an operating frequency.

12. The remote device of claim 11 where the memory contains a minimum power consumption.

13. The remote device of claim 12 further comprising a secondary transceiver.

14. The remote device of claim 13 where the secondary transceiver is capable of receiving power consumption information from the inductive power supply and the secondary controller compares the power consumption information with the minimum power consumption.

15. A method of operating an inductive power supply comprising:

energizing a primary at an initial frequency;

polling a remote device; and

if there is no response from the remote device, turning off the primary.

16. The method of operating an inductive supply of claim 15 further comprising:

if there is a response from the remote device, then obtaining an operating frequency from the remote device; and

energizing the primary at the operating frequency.

17. The method of operating an inductive supply of claim 16 further comprising:

receiving frequency change information from the remote device; and

changing the operating frequency based upon the frequency change information.



InductEV, Inc.
Exhibit 1025
Page 1628

18. The method of operating an inductive supply of claim 17 further comprising:

receiving from the remote device a quiescent mode instruction; and

turning off the primary in response to the quiescent mode instruction.

19. The method of operating an inductive supply of claim 18 further comprising:

determining a consumed power by the primary; and

transmitting the consumed power to the remote device.

20. A method of operating a remote device, the remote device having a secondary for receiving power at an operating frequency from an inductive power supply and powering a load, comprising:

comparing a desired voltage with an actual voltage; and

sending an instruction to the inductive power supply to correct the actual voltage.

21. The method of operating a remote device of claim 20 where the actual voltage and desired voltage are with reference to a voltage across the secondary.

22. The method of operating a remote device of claim 21 where the instruction is a command to the inductive power supply to change the operating frequency.

23. The method of operating a remote device of claim 22 where the step of comparing a desired voltage with an actual voltage further comprises:

reading a peak voltage.

24. The method of operating a remote device of claim 22 where the step of comparing a desired voltage with an actual voltage further comprises:

retrieving from memory a correction factor; and

applying the correction factor to the peak voltage to obtain the actual voltage.

25. The method of operating a remote device of claim 22 where the step of comparing applying the correction factor comprising multiplying the peak voltage by the correction factor.

26. The method of operating a remote device of claim 23 further comprising:

if the actual voltage is greater than desired voltage, then the command to the inductive power supply includes an instruction to increase the operating frequency.



InductEV, Inc.
Exhibit 1025
Page 1629

27. The method of operating a remote device of claim 23 further comprising:

if the actual voltage is less than desired voltage, then the command to the inductive power supply includes an instruction to decrease the operating frequency.



InductEV, Inc.
Exhibit 1025
Page 1630

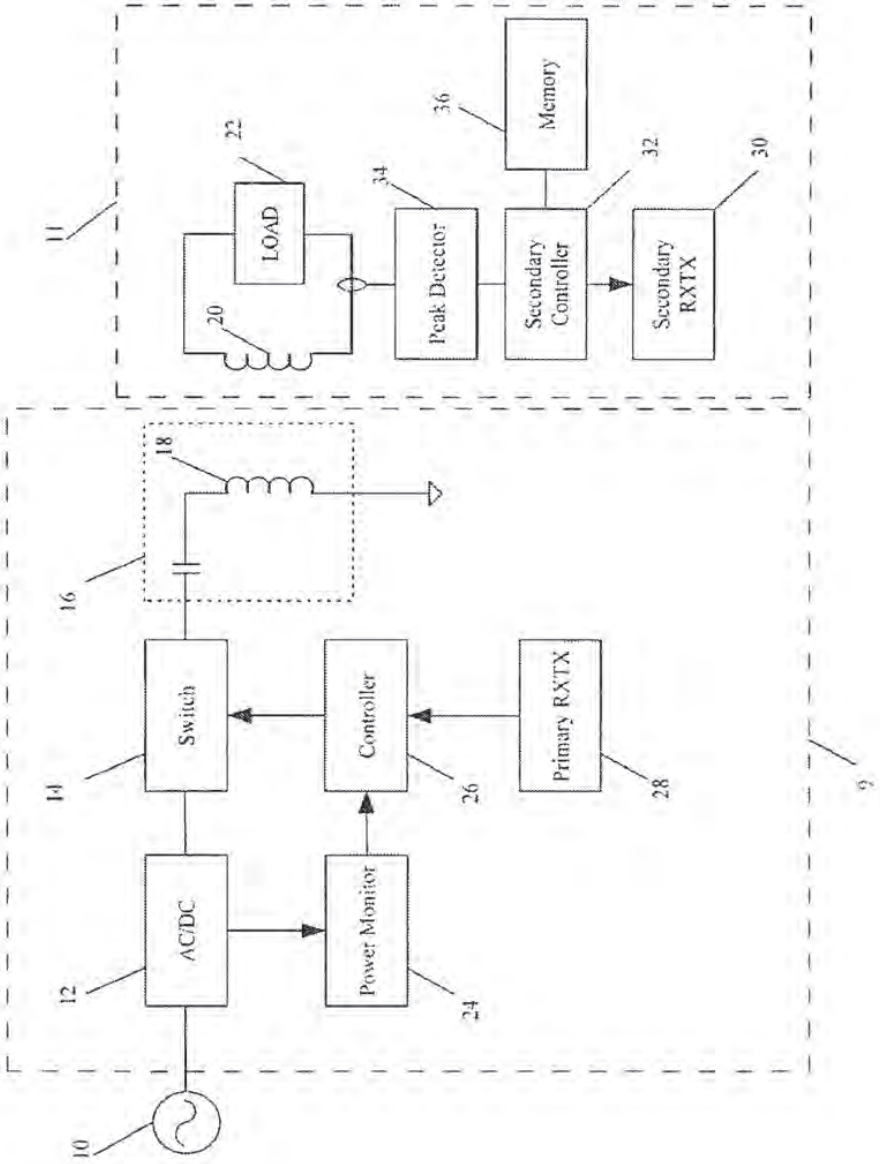


FIG. 1



InductEV, Inc.
Exhibit 1025
Page 1631

## CORRECTION FACTOR INDEXED BY PR2

(Light Bulb)

| PR2 | CF | PR2 | CF | PR2 | CF | PR2 | CF | PR2 | CF |
|---|---|---|---|---|---|---|---|---|---|
| 1 | 174 | 27 | 174 | 53 | 174 | 79 | 180 | 105 | 199 |
| 2 | 174 | 28 | 174 | 54 | 174 | 80 | 180 | 106 | 199 |
| 3 | 174 | 29 | 174 | 55 | 174 | 81 | 181 | 107 | 199 |
| 4 | 174 | 30 | 174 | 56 | 174 | 82 | 182 | 108 | 199 |
| 5 | 174 | 31 | 174 | 57 | 174 | 83 | 183 | 109 | 199 |
| 6 | 174 | 32 | 174 | 58 | 174 | 84 | 184 | 110 | 199 |
| 7 | 174 | 33 | 174 | 59 | 174 | 85 | 185 | 111 | 199 |
| 8 | 174 | 34 | 174 | 60 | 174 | 86 | 186 | 112 | 199 |
| 9 | 174 | 35 | 174 | 61 | 174 | 87 | 188 | 113 | 199 |
| 10 | 174 | 36 | 174 | 62 | 174 | 88 | 189 | 114 | 199 |
| 11 | 174 | 37 | 174 | 63 | 174 | 89 | 189 | 115 | 199 |
| 12 | 174 | 38 | 174 | 64 | 174 | 90 | 190 | 116 | 199 |
| 13 | 174 | 39 | 174 | 65 | 174 | 91 | 192 | 117 | 199 |
| 14 | 174 | 40 | 174 | 66 | 174 | 92 | 194 | 118 | 199 |
| 15 | 174 | 41 | 174 | 67 | 174 | 93 | 196 | 119 | 199 |
| 16 | 174 | 42 | 174 | 68 | 174 | 94 | 197 | 120 | 199 |
| 17 | 174 | 43 | 174 | 69 | 174 | 95 | 198 | 121 | 199 |
| 18 | 174 | 44 | 174 | 70 | 174 | 96 | 199 | 122 | 199 |
| 19 | 174 | 45 | 174 | 71 | 174 | 97 | 200 | 123 | 199 |
| 20 | 174 | 46 | 174 | 72 | 174 | 98 | 200 | 124 | 199 |
| 21 | 174 | 47 | 174 | 73 | 175 | 99 | 199 | 125 | 199 |
| 22 | 174 | 48 | 174 | 74 | 175 | 100 | 199 | 126 | 199 |
| 23 | 174 | 49 | 174 | 75 | 176 | 101 | 199 | 127 | 199 |
| 24 | 174 | 50 | 174 | 76 | 176 | 102 | 199 | 128 | 199 |
| 25 | 174 | 51 | 174 | 77 | 177 | 103 | 199 | | |
| 26 | 174 | 52 | 174 | 78 | 179 | 104 | 199 | | |

*FIG. 2*



InductEV, Inc.
Exhibit 1025
Page 1632

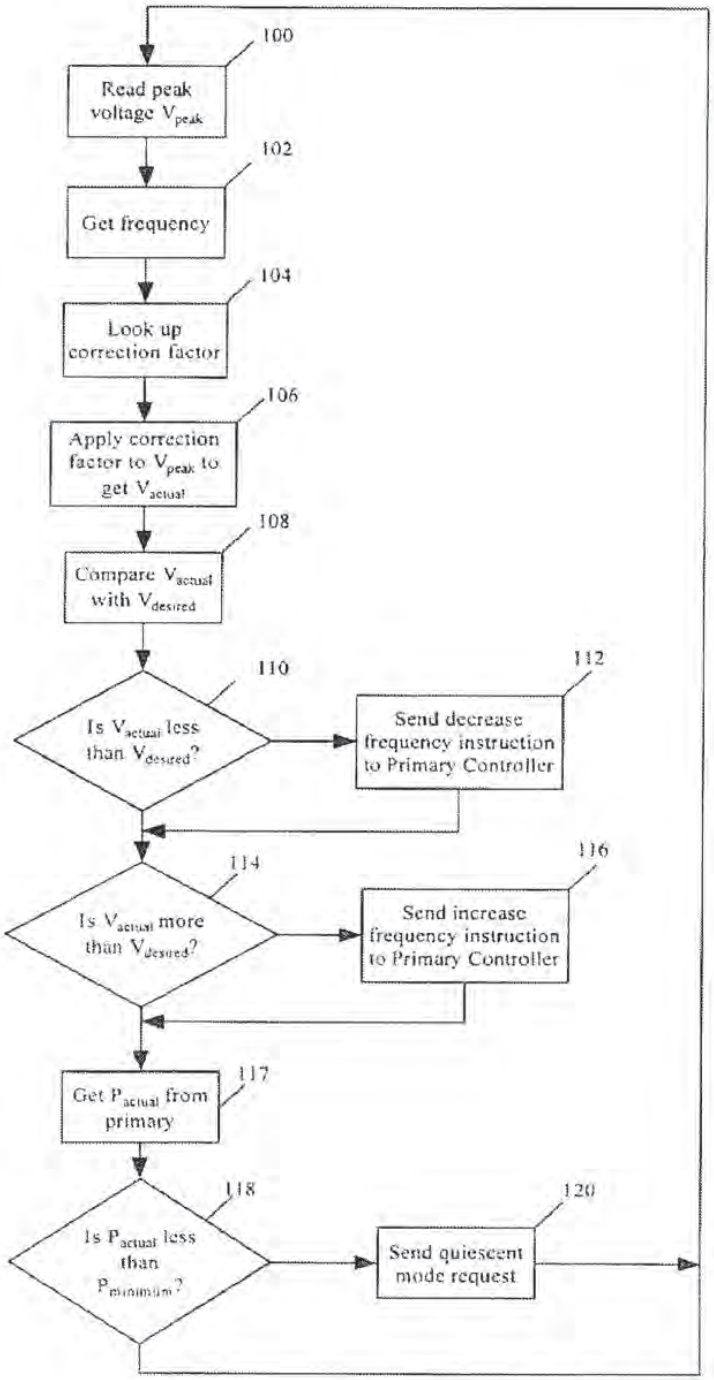


*FIG. 3*



InductEV, Inc.
Exhibit 1025
Page 1633

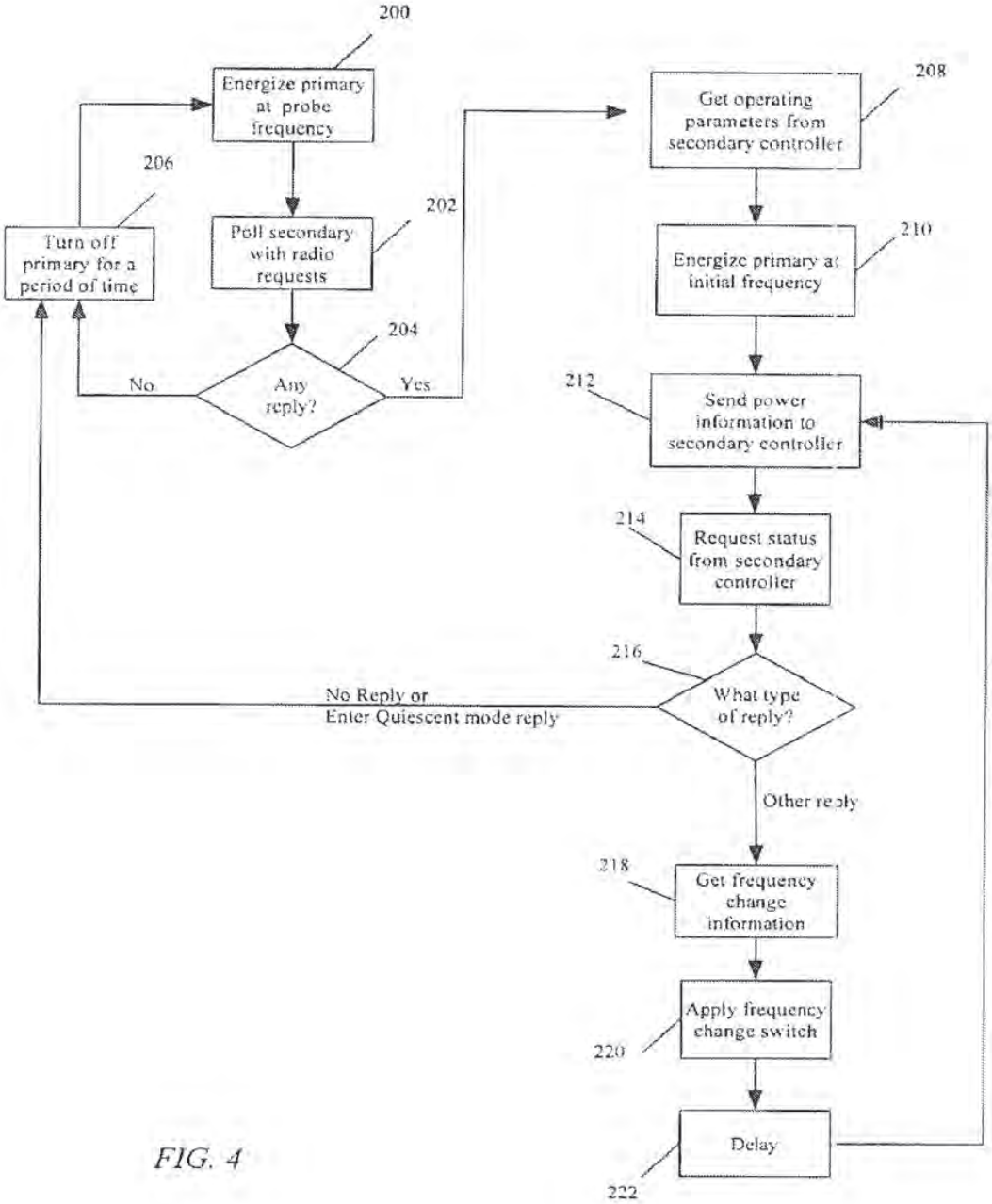


*FIG. 4*



InductEV, Inc.
Exhibit 1025
Page 1634

(12) INTERNATIONAL APPLICATION PUBLISHED UNDER THE PATENT COOPERATION TREATY (PCT)

(19) World Intellectual Property Organization
International Bureau

(43) International Publication Date
22 February 2007 (22.02.2007)

PCT

(10) International Publication Number
WO 2007/020583 A3

(51) International Patent Classification: *H02J 5/00* (2006.01)

(21) International Application Number: PCT/IB2006/052783

(22) International Filing Date: 11 August 2006 (11.08.2006)

(25) Filing Language: English

(26) Publication Language: English

(30) Priority Data:
11/204,820 16 August 2005 (16.08.2005) US

(71) Applicant *(for all designated States except US)*: **ACCESS BUSINESS GROUP INTERNATIONAL LLC** [US/US]; 7575 Fulton Street East, Ada, MI 49355 (US).

(72) Inventors; and

(75) Inventors/Applicants *(for US only)*: **BAARMAN, David, W** [US/US]; 6414 - 127th Avenue, Fennville, MI 49408 (US). **STIEN, Nathan, P.** [US/US]; 127 East Hines Place, Apt. B4, Peoria, IL 61614 (US). **BACHMAN, Wesley, J.** [US/US]; 48 Sugar Creek Hills, Auburn, IL 62615 (US). **LORD, John, James** [US/US]; 3106 Hazlett Road, Springfield, IL 62707 (US).

(74) Agents: **WOOD, J., Ray** et al.; Warner Norcross & Judd LLP, 900 Fifth Third Center, 111 Lyon Street, N.W., Grand Rapids, MI 49503-2487 (US).

(81) Designated States *(unless otherwise indicated, for every kind of national protection available)*: AE, AG, AL, AM, AT, AU, AZ, BA, BB, BG, BR, BW, BY, BZ, CA, CH, CN, CO, CR, CU, CZ, DE, DK, DM, DZ, EC, EE, EG, ES, FI, GB, GD, GE, GH, GM, HN, HR, HU, ID, IL, IN, IS, JP, KE, KG, KM, KN, KP, KR, KZ, LA, LC, LK, LR, LS, LT, LU, LV, LY, MA, MD, MG, MK, MN, MW, MX, MZ, NA, NG, NI, NO, NZ, OM, PG, PH, PL, PT, RO, RS, RU, SC, SD, SE, SG, SK, SL, SM, SY, TJ, TM, TN, TR, TT, TZ, UA, UG, US, UZ, VC, VN, ZA, ZM, ZW.

(84) Designated States *(unless otherwise indicated, for every kind of regional protection available)*: ARIPO (BW, GH, GM, KE, LS, MW, MZ, NA, SD, SL, SZ, TZ, UG, ZM, ZW), Eurasian (AM, AZ, BY, KG, KZ, MD, RU, TJ, TM), European (AT, BE, BG, CH, CY, CZ, DE, DK, EE, ES, FI, FR, GB, GR, HU, IE, IS, IT, LT, LU, LV, MC, NL, PL, PT, RO, SE, SI, SK, TR), OAPI (BF, BJ, CF, CG, CI, CM, GA, GN, GQ, GW, ML, MR, NE, SN, TD, TG).

**Published:**
— *with international search report*
— *before the expiration of the time limit for amending the claims and to be republished in the event of receipt of amendments*

*[Continued on next page]*

**(54) Title:** INDUCTIVE POWER SUPPLY, REMOTE DEVICE POWERED BY INDUCTIVE POWER SUPPLY AND METHOD FOR OPERATING SAME

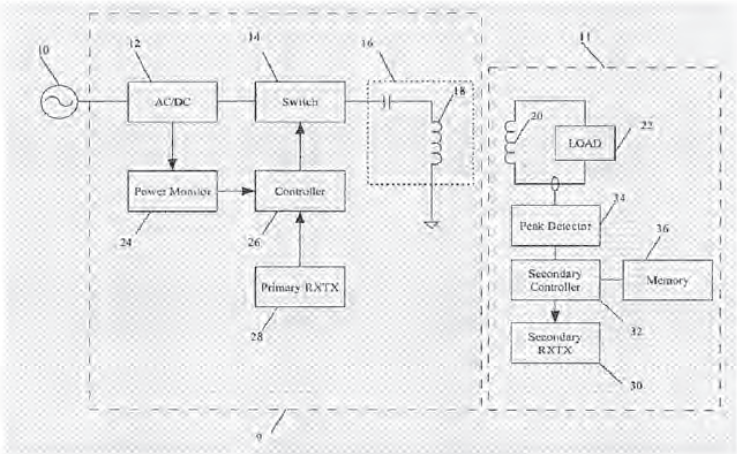


**(57) Abstract:** An inductive power supply (9) includes a transceiver (28) for sending information between the remote device (11) and the inductive power supply. The remote device determines the actual voltage and then sends a command to the inductive power supply to change the operating frequency if the actual voltage is different from the desired voltage. In order to determine the actual voltage, the remote device determines a peak voltage (34) and then applies a correction factor.

WO 2007/020583 A3

**(88) Date of publication of the international search report:**
3 January 2008

*For two-letter codes and other abbreviations, refer to the "Guidance Notes on Codes and Abbreviations" appearing at the beginning of each regular issue of the PCT Gazette.*

# INTERNATIONAL SEARCH REPORT

International application No
PCT/IB2006/052783

**A. CLASSIFICATION OF SUBJECT MATTER**
INV. H02J5/00

According to International Patent Classification (IPC) or to both national classification and IPC

**B. FIELDS SEARCHED**

Minimum documentation searched (classification system followed by classification symbols)
H02J

Documentation searched other than minimum documentation to the extent that such documents are included in the fields searched

Electronic data base consulted during the international search (name of data base and, where practical, search terms used)

EPO-Internal

**C. DOCUMENTS CONSIDERED TO BE RELEVANT**

| Category* | Citation of document, with indication, where appropriate, of the relevant passages | Relevant to claim No. |
|---|---|---|
| X | US 2005/007067 A1 (BAARMAN DAVID W [US] ET AL) 13 January 2005 (2005-01-13)<br>figures 7-9<br>paragraphs [0023], [0027]<br>paragraphs [0029] - [0037]<br>paragraphs [0040], [0041]<br>paragraphs [0044], [0045]<br>paragraphs [0047] - [0049]<br>paragraphs [0053], [0054], [0056]<br>paragraphs [0059] - [0061]<br>----- | 1-19 |
| X | US 2003/214821 A1 (GIANNOPOULOS DEMETRI [US] ET AL) 20 November 2003 (2003-11-20)<br>figure 1<br>paragraphs [0016], [0020], [0021], [0026]<br>----- | 1,7-9, 20-27 |

-/--

[X] Further documents are listed in the continuation of Box C.

[X] See patent family annex.

* Special categories of cited documents :

"A" document defining the general state of the art which is not considered to be of particular relevance

"E" earlier document but published on or after the international filing date

"L" document which may throw doubts on priority claim(s) or which is cited to establish the publication date of another citation or other special reason (as specified)

"O" document referring to an oral disclosure, use, exhibition or other means

"P" document published prior to the international filing date but later than the priority date claimed

"T" later document published after the international filing date or priority date and not in conflict with the application but cited to understand the principle or theory underlying the invention

"X" document of particular relevance; the claimed invention cannot be considered novel or cannot be considered to involve an inventive step when the document is taken alone

"Y" document of particular relevance; the claimed invention cannot be considered to involve an inventive step when the document is combined with one or more other such documents, such combination being obvious to a person skilled in the art.

"&" document member of the same patent family

| Date of the actual completion of the international search | Date of mailing of the international search report |
|---|---|
| 16 October 2007 | 31/10/2007 |

| Name and mailing address of the ISA/ | Authorized officer |
|---|---|
| European Patent Office, P.B. 5818 Patentlaan 2<br>NL - 2280 HV Rijswijk<br>Tel. (+31-70) 340-2040, Tx. 31 651 epo nl,<br>Fax: (+31-70) 340-3016 | Le Chenadec, Hervé |

Form PCT/ISA/210 (second sheet) (April 2005)

# INTERNATIONAL SEARCH REPORT

International application No
PCT/IB2006/052783

C(Continuation). DOCUMENTS CONSIDERED TO BE RELEVANT

| Category* | Citation of document, with indication, where appropriate, of the relevant passages | Relevant to claim No. |
|---|---|---|
| X | US 2002/089305 A1 (PARK SANG-KYU [KR] ET AL) 11 July 2002 (2002-07-11)<br>figure 2<br>----- | 1,7-9 |
| X | US 6 184 651 B1 (FERNANDEZ JOSE M [US] ET AL) 6 February 2001 (2001-02-06)<br>figures 2,3<br>column 4, line 10 - line 20<br>column 4, line 47 - line 54<br>column 5, line 62 - line 66<br>column 6, line 3 - line 17<br>column 6, line 50 - line 65<br>column 7, line 3 - line 6 | 1,7-9 |
| A | ----- | 18,19 |
| A | US 4 924 171 A (BABA FUJIO [JP] ET AL)<br>8 May 1990 (1990-05-08)<br>figure 3<br>----- | 8,9,23 |
| A | "PS402-01XX Single Chip Battery Manager - Nickel Chemistries"<br>2003, MICROCHIP TECHNOLOGY INC. ,<br>XP002455122<br>pages 2,3,5-6<br>page 16<br>----- | 10-12 |

Form PCT/ISA/210 (continuation of second sheet) (April 2005)

# INTERNATIONAL SEARCH REPORT

Information on patent family members

International application No
PCT/IB2006/052783

| Patent document cited in search report | | Publication date | Patent family member(s) | | | Publication date |
|---|---|---|---|---|---|---|
| US 2005007067 | A1 | 13-01-2005 | US | 2005122058 | A1 | 09-06-2005 |
| | | | US | 2005122059 | A1 | 09-06-2005 |
| | | | US | 2005127849 | A1 | 16-06-2005 |
| | | | US | 2005127850 | A1 | 16-06-2005 |
| US 2003214821 | A1 | 20-11-2003 | AU | 2003230103 | A1 | 02-12-2003 |
| | | | CN | 1653670 | A | 10-08-2005 |
| | | | EP | 1506606 | A1 | 16-02-2005 |
| | | | WO | 03098773 | A1 | 27-11-2003 |
| | | | JP | 2005526474 | T | 02-09-2005 |
| US 2002089305 | A1 | 11-07-2002 | KR | 20020057468 | A | 11-07-2002 |
| US 6184651 | B1 | 06-02-2001 | NONE | | | |
| US 4924171 | A | 08-05-1990 | JP | 1206853 | A | 21-08-1989 |
| | | | JP | 2597623 | B2 | 09-04-1997 |

Form PCT/ISA/210 (patent family annex) (April 2005)

(12) INTERNATIONAL APPLICATION PUBLISHED UNDER THE PATENT COOPERATION TREATY (PCT)

(19) World Intellectual Property Organization
International Bureau

(43) International Publication Date
19 April 2007 (19.04.2007)

PCT

(10) International Publication Number
WO 2007/042952 A1

(51) International Patent Classification:
*A61B 5/117* (2006.01)

(21) International Application Number:
PCT/IB2006/053299

(22) International Filing Date:
14 September 2006 (14.09.2006)

(25) Filing Language: English

(26) Publication Language: English

(30) Priority Data:
60/725,148 7 October 2005 (07.10.2005) US

(71) Applicant *(for all designated States except US)*: **KONINKLIJKE PHILIPS ELECTRONICS, N.V.** [NL/NL]; Groenewoudseweg 1, NL-5621 BA Eindhoven (NL).

(71) Applicant *(for AE only)*: **U.S. PHILIPS CORPORATION** [US/US]; 1251 Avenue of the Americas, New York, NY 10020 (US).

(72) Inventors; and
(75) Inventors/Applicants *(for US only)*: **AKKERMANS, Ton, H.** [NL/NL]; Gareel 27, NL-5502 SB Veldhoven (NL). **SCHOBBEN, Daniel** [NL/NL]; Leeuwenbeklaan 6, NL-5582 CC Waalre (NL).

(74) Common Representative: **KONINKLIJKE PHILIPS ELECTRONICS, N.V.**; c/o Lundin, Thomas, M., 595 Miner Road, Cleveland, OH 44143 (US).

(81) Designated States *(unless otherwise indicated, for every kind of national protection available)*: AE, AG, AL, AM, AT, AU, AZ, BA, BB, BG, BR, BW, BY, BZ, CA, CH, CN, CO, CR, CU, CZ, DE, DK, DM, DZ, EC, EE, EG, ES, FI, GB, GD, GE, GH, GM, HN, HR, HU, ID, IL, IN, IS, JP, KE, KG, KM, KN, KP, KR, KZ, LA, LC, LK, LR, LS, LT, LU, LV, LY, MA, MD, MG, MK, MN, MW, MX, MY, MZ, NA, NG, NI, NO, NZ, OM, PG, PH, PL, PT, RO, RS, RU, SC, SD, SE, SG, SK, SL, SM, SV, SY, TJ, TM, TN, TR, TT, TZ, UA, UG, US, UZ, VC, VN, ZA, ZM, ZW.

(84) Designated States *(unless otherwise indicated, for every kind of regional protection available)*: ARIPO (BW, GH, GM, KE, LS, MW, MZ, NA, SD, SL, SZ, TZ, UG, ZM, ZW), Eurasian (AM, AZ, BY, KG, KZ, MD, RU, TJ, TM), European (AT, BE, BG, CH, CY, CZ, DE, DK, EE, ES, FI, FR, GB, GR, HU, IE, IS, IT, LT, LU, LV, MC, NL, PL, PT, RO, SE, SI, SK, TR), OAPI (BF, BJ, CF, CG, CI, CM, GA, GN, GQ, GW, ML, MR, NE, SN, TD, TG).

*[Continued on next page]*

(54) Title: EAR-THERMOMETER WITH EAR IDENTIFICATION

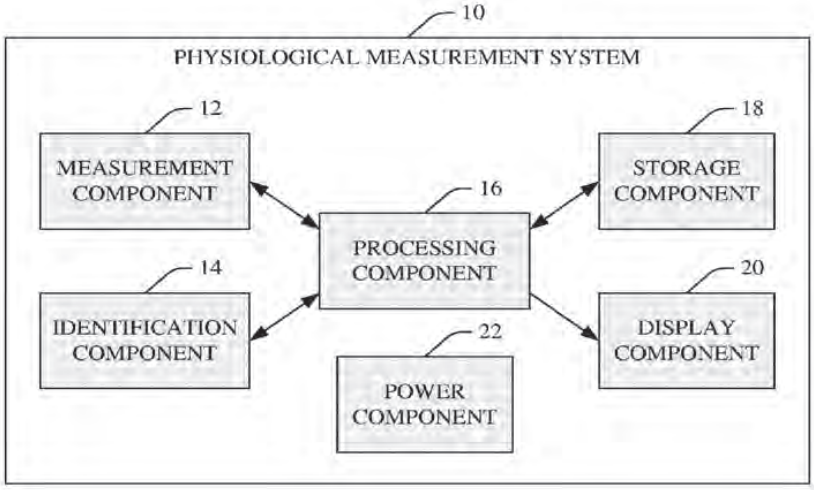


(57) Abstract: A physiological measurement device (10) that concurrently measures a physiological state of an individual and determines an identity of the individual includes at least a measurement component (12), an identification component (14), and processing component (16). The measurement component (12) measures the physiological state of the individual, and the identification component (14) concurrently determines the identity of the individual. The processing component (16) associates the physiological state of the individual with the identity of the individual.

WO 2007/042952 A1

**Declaration under Rule 4.17:**

— *as to applicant's entitlement to apply for and be granted a patent (Rule 4.17(ii))*

**Published:**

— *with international search report*

— *before the expiration of the time limit for amending the claims and to be republished in the event of receipt of amendments*

*For two-letter codes and other abbreviations, refer to the "Guidance Notes on Codes and Abbreviations" appearing at the beginning of each regular issue of the PCT Gazette.*

# EAR-THERMOMETER WITH EAR IDENTIFICATION

## DESCRIPTION

The following relates to sensing physiological information emitted by an individual and concurrently biometrically identifying the individual through a single device. It finds particular application to concurrently sensing a temperature of the individual and identifying the individual via an ear-thermometer with ear biometric identification componentry. Other applications are also contemplated.

Conventionally, a temperature of an individual is obtained through fluid-filled or electronic thermometers. Both types of thermometers are used to obtain oral, axilliary, and rectal temperatures. Some electronic thermometers also measure temperature from the eardrum of the individual. For example, tympanic ("in-the-ear") thermometers measure the temperature of the tympanum, or tympanic membrane, which is a thin membrane that separates the outer ear from the middle ear, via an infrared measurement. Typically, tympanic thermometers are simple hand-held devices with a probe that is inserted into the ear canal to measure the patient's temperature.

Electronic thermometers are commonly used at health care facilities (e.g., hospitals, clinics, doctor offices, etc.), infirmaries in businesses, educational institutions and day cares, home, etc. In these settings, a single electronic thermometer typically is used to measure the temperature of more than one individual, sometimes within a relatively short period of time. In order to prevent forgetting a temperature and/or associating a temperature with the wrong individual, the user of the electronic thermometer typically records the temperature shortly after it is obtained. By way of example, a nurse in a hospital caring for a plurality of patients typically uses the same thermometer, stethoscope, sphygmomanometer, etc. when collecting vital signs for the patients. Upon measuring the temperature of a particular patient, the nurse records the temperature, and associates the recorded temperature with the patient. For instance, the nurse may record the temperature in a patient chart or write the temperature next to a unique identification (e.g., the individual's name, social security number, patient number, room number, etc.). After obtaining and recording the patient's vital signs, the nurse replaces a disposable cover, disinfects the instrument, or the like, and moves on to the next patient. Similarly, a parent at home may have more than one ill child. Likewise, the parent typically measures, records and associates each child's temperature on a child by child basis.



InductEV, Inc.
Exhibit 1025
Page 1642

Manually recording and associating temperatures of individuals is susceptible to human error. For instance, the user may inadvertently record an incorrect temperature. In another instance, the temperature of a first individual may be mistakenly associated with a different individual. In yet another instance, an identification wrist band or other identifying indicia may include erroneous information or be affixed to the wrong individual. In still another instance, the identification wrist band or other identifying indicia may have been tampered with such that the correct identity of the individual cannot be readily obtained from it. In another instance, an individual lends his/her identification wrist band to someone else, which can lead to erroneous operations, blood transfusions, etc. in the worst case leading to death. One or more of these examples as well as other situations may lead to the administration of an incorrect medication, unnecessary surgery, accidental baby swapping, etc.

A more robust approach for identifying the individual is through biometric indentification such as a fingerprint, an iris map, acoustical properties of the ear, etc. By way of example, an ear probe may send a tone into the ear and listens for either reflected sound or otoacoustic emissions. Both of these approaches can be used to uniquely identify the individual through a biometric that typically cannot be lost or stolen. Even when using an ear thermometer device and a biometric ear probe or other biometric device, the user still has to manually record the temperature of the individual and associate the temperature with the correct biometrically identified individual. Thus, even when using more robust identification techniques, recorded measurements are still susceptible to human error.

In one embodiment, a physiological measurement device is illustrated. The device concurrently measures a physiological state of an individual and determines an identity the individual. The device includes a measurement component that measures the physiological state of the individual, and an identification component that concurrently determines the identity of the individual. A processing component of the device associates the physiological state of the individual with the identity of the individual.

One advantage includes concurrently measuring a physiological state of an individual and identifying the individual.



InductEV, Inc.
Exhibit 1025
Page 1643

Another advantage resides in using a single device to concurrently identify an individual and measure at least one physiological state of the individual.

Another advantage lies in mitigating human error associated with manually associating physiological and identity information.

Another advantage resides in storing physiological state and identify information for a plurality of individuals.

Another advantage includes conveying correlated physiological state and identify information for one or more individuals to other components.

Still further advantages will become apparent to those of ordinary skill in the art upon reading and understanding the detailed description of the preferred embodiments.

FIGURE 1 illustrates a physiological measurement system that concurrently measures physiological state information and identification of an individual.

FIGURE 2 illustrates another embodiment of the physiological measurement system.

FIGURE 3 illustrates an embodiment in which the physiological measurement system includes an electronic ear thermometer.

FIGURE 4 illustrates a reflected sound technique for facilitating identifying an individual via ear characteristics unique to the individual.

FIGURE 5 illustrates a particular embodiment of the physiological measurement system having an electronic ear thermometer.

FIGURE 6 illustrates the physiological measurement system within a body area network.

FIGURE 7 illustrates a method for using the physiological measurement system to concurrently measure a temperature and identify an individual via an ear of the individual.

FIGURE 1 illustrates a physiological measurement system ("system") 10 that concurrently measures various physiological information representative of at least a physiological state and an identification of an individual. Suitable information indicative of physiological state includes, but is not limited to, temperature, pulse, blood pressure,



InductEV, Inc.
Exhibit 1025
Page 1644

blood-oxygen percent, heart rate, ECG/EKG or other heart electrical signals, etc., and suitable information indicative of identification includes, but is not limited to, a fingerprint, an iris map, acoustical properties of the ear, etc.

The system 10 includes a measurement component 12 for collecting physiological state information for one more physiological systems (e.g., circulatory, respiratory, cardiovascular, etc.) of the individual. For example, the measurement component 12 can include sensors for sensing temperature, blood pressure, blood-oxygen percent, heart rate, heart electrical activity, eye pressure, etc. An identification component 14 works in conjunction with the measurement component 12 in order to identify the individual while collecting the physiological state information. For example, while using a temperature sensor (not shown) of the measurement component 12 to measure a temperature from within an ear of the individual, an identification sensor (not shown) of the identification component 12 is used to identify the individual through biometrics such as unique characteristics of the ear (e.g., via reflected sound, otoacoustic (spontaneous and evoked) emissions, etc.).

In another example, while using an inner-ear blood pressure sensor (not shown) or a pulseoximeter of the measurement component 12 to measure a blood pressure or a blood oxygen level of the individual from the ear, an identification sensor (not shown) of the identification component 12 is used to identify the individual through unique characteristics of the ear. In another example, while using an eye pressure sensor (not shown) of the measurement component 12 to measure a pressure within an eye of the individual, an identification sensor (not shown) of the identification component 12 is used to identify the individual through an iris map or retinal scan. In another example, while using a finger blood pressure sensor (not shown) or a finger pulseoximeter of the measurement component 12 to measure a blood pressure or blood oxygen level of the individual, an identification sensor (not shown) of the identification component 12 is used to identify the individual through a fingerprint. It is to be appreciated that the sensor used for measuring the physiological state and for identification may be two independent sensors or substantially the same sensor. For instance, the QRS of a heart beat may be derived from information obtained from the same infrared sensor (e.g., in an ear-thermometer) used to measure temperature.



InductEV, Inc.
Exhibit 1025
Page 1645

It is to be understood that the above examples are provided for explanatory purposes and are not limiting. In other embodiments, various other physiological state information is concurrently obtained along with the identity of the individual. In addition, the physiological state information and the identification may or may not be determined from substantially similar data. Furthermore, the identity information can be used to verify the identity of the individual. For instance, the identity of the individual as determined by the identification component 12 can be cross-checked with a wrist band or other mechanism or indicia used to identify the individual.

The system 10 further includes a processing component 16 that receives and associates the physiological information collected by the measurement component 12 and the identification component 14. Thus, the measured physiological information indicative of a state of one or more physiological systems of the individual is associated with the measured physiological information indicative of an identity of the individual. This association enables the system 10 to measure and store physiological state information from a plurality of different individuals. Subsequently, the physiological state information of any one of the individuals can be extracted from the stored data based on the identity of the individual.

The processing component 16 associates raw data with each individual and/or includes componentry (not shown) to process (e.g., filter, condition, amplify, threshold, etc.) the physiological state information into data more meaningful to the person acquiring the physiological information. For instance, the processing component 16 can associate resistance, current, voltage, capacitance, etc. readings with an individual and/or convert such readings to a temperature, heart rate, blood pressure, etc. and associate the processed data with the individual.

The processing component 16 stores the raw and/or processed data along with the identity of the individual in a storage component 18, which allows the user of the system 10 to measure and retain physiological information from a plurality of individuals. The storage component 18 includes volatile and/or non-volatile memory for storage of such data. The storage capacity of the storage component 18 is based on the application and cost considerations.

A display component 20 is used to present the collected physiological information to a user of the system 10. The processing component 16 presents newly acquired and/or



InductEV, Inc.
Exhibit 1025
Page 1646

stored physiological information on the display for the user to observe. The user determines the display information, for example, by using the system 10 to acquire physiological information and/or selecting stored physiological information. The display 20 can include at least one of one or more light emitting diodes (LEDs), seven-segment displays, liquid crystals displays, etc. Various actuators and sensors (not shown) are used to initiate measurements and/or retrieve stored data. For instance, the display 20 may include touch-screen technology to navigate through menus of options. In another instance, the system 10 may include physical buttons, dials, switches, triggers, etc. that invoke one or more actions.

A power supply 22 powers the components of the system 10. The power supply 22 can include one or more internal batteries (e.g., re-chargeable and non-rechargeable) and/or an adapter that converts AC power to suitable power.

The system 10 can be a portable device such as a hand held device or a device (removeably) affixed to a mobile structure that moves on a wheel(s), or a static device mounted to a supporting structure such as a wall or other relatively stationary instrumentation.

With reference to FIGURE 2, the system 10 optionally includes portable storage 24 and/or network componentry 26. The portable storage 24 includes storage such as various types of flash memory. This enables the user of the system 10 to store and transfer physiological information by storing such information within the portable storage 24, removing the portable storage component 24 from the system 10, and connecting it to a suitable interface of another device such as a computer, a database, a monitoring station, etc. The portable storage 24 is also used to load applications, firmware, utilities, etc. onto the system 10, for example, by first storing applications, firmware, utilities, etc. on the portable storage 24, connecting the portable storage 24 to the system 10, and manually and/or automatically loading the applications, firmware, utilities, etc.

The network component 26 is also used to convey measured and/or stored physiological information to other systems. The network component 26 is associated with various wired and/or wireless communication protocols for communicating with networks such as a cellular network, a Personal Communication Service (PCS), a Wide Area Network (WAN) (e.g., the Internet), a Local Area Networks (LAN), a Metropolitan Area Network (MAN), a Campus Area Network (CAN), a Home Area Network (HAN), a



InductEV, Inc.
Exhibit 1025
Page 1647

Personal Area Networks (PAN), a Body Area Network (BAN), and the like. Suitable communication ports include Ethernet, Universal Serial Bus (USB), parallel, serial, optical, infrared, FireWire, etc.

Stored physiological information obtained from the system 10 via the portable storage 24 and/or the network component 26 can be analyzed and displayed according to each individual since each measurement is associated with an identity of an individual. Other information such as date, an identity of the person taking the measurement, an identity of a doctor, etc. can also be associated with the temperatures. This enables temperatures to be delineated by individual and analyzed over time, separated across the people using the system 10 to take measurements, grouped by physician, etc.

FIGURE 3 illustrates a preferred embodiment in which the measurement component 12 includes an electronic ear thermometer 28. In one instance, the electronic ear thermometer 28 is a thermoelectric thermometer that uses thermoelectric current to measure temperature. This type of thermometer reads the infrared heat waves released by the eardrum. A temperature is obtained by pulling the ear backward to straighten the ear canal and aiming the ear probe between the opposite eye and earlobe. The electronic ear thermometer 28 measures the infrared heat of the eardrum and converts it to an electric signal representative of the temperature. This temperature correlates to the temperature of the hypothalamus, which is the temperature controlling system of the brain. Typically, this type of thermometer measures temperature relatively quickly (e.g., less than 2 seconds) with respect to non-ear thermometers. It also does not require cooperation by the individual (like holding a thermometer under an arm, in a mouth, etc.) and does not usually cause any discomfort.

As the electronic ear thermometer 28 measures temperature, the identification component 14 concurrently identifies the person via any suitable ear identification technique. For instance, in one embodiment a reflected sound technique is used. This embodiment is illustrated in FIGURE 4 in which the identification component 14 includes a first transducer 30 (e.g., a speaker) that is used to emit a sound wave, or an excitation signal, into the eardrum and a second transducer 32 (e.g., a microphone) that captures a reflected sound wave, or echo signal. The echo signal is characteristic of the eardrum/ear canal combination and is unique to the individual.



InductEV, Inc.
Exhibit 1025
Page 1648

In another embodiment, an otoacoustic approach is used. Otoacoustic emissions are weak emissions from the inner ear which can be recorded in the occluded ear canal using a relatively sensitive microphone. The otoacoustic emissions can arise spontaneously or be evoked by presenting acoustic stimuli. Applying two pure tones simultaneously in an inharmonic ratio leads to additional tones (e.g., distortion products) caused by the nonlinear behavior of the human auditory system. It is to be appreciated that the foregoing examples are provided for illustrative purpose and do not limit the invention. Other techniques such as ultrasound and the like are also contemplated.

FIGURE 5 illustrates a particular example of the system 10 in which the measurement component 12 includes the electronic ear thermometer 28. Depicted is a hand-held unit having a housing 34 that protects various componentry (e.g., electronics) of the system 10 from contamination, destruction, etc. The housing 34 may be hermetically sealed to prevent ingress of fluids and/or particulate matter.

A shaft (or probe) 36 houses the ear thermometer 28. The shaft 36 is suitably designed for penetrating an opening into the ear canal. The shaft 36 is placed in the ear canal of the individual such that the ear thermometer 28 is suitably positioned for obtaining measurements. The ear thermometer 28 includes a sensor (not shown) such as an infrared sensor which collects signals emitted from with the ear canal. A transducer (not shown) of the ear thermometer 28 converts the collected signals to suitable representations such as electric currents, voltages, resistance, etc.

The shaft 36 also includes a plurality of transceivers 40 that emit acoustic signals into the ear canal and that receive signals reflected from the physical structured within the ear. The received signals are correlated with the emitted signals to obtain the physical structure in the ear and are unique to each individual such that they can be used to identify each individual. An optional sheath (not shown) can be placed over the end of the shaft 36 to protect the shaft and subsequent individuals from contamination. The sheath and/or shaft 36 can be cleanable and/or sterializable or disposable. The temperature and the ear-identification information are concurrently obtained and associated.

FIGURE 6 illustrates the system 10 residing within a wireless body area network (BAN). The system 10 is depicted at various locations proximate an individual for concurrently measuring physiological state information and identity. At a first position 42, the system 10 is positioned proximate to an ear of the individual for concurrently



InductEV, Inc.
Exhibit 1025
Page 1649

measuring a temperature of the individual and uniquely identifying the individual from ear characteristics. In other embodiments, blood pressure, blood oxygen level, etc. can also be acquired at 42 along with the unique identity. At a second position 44, the system 10 is positioned proximate to an eye of the individual for concurrently measuring an eye pressure, etc. of the individual and uniquely identifying the individual via an iris map. At an Nth position 46, the system 10 is positioned proximate to a finger of the individual for concurrently measuring a pulse, blood pressure, blood oxygen level, etc. of the individual and uniquely identifying the individual via a fingerprint. It is to be appreciated that these examples are provided for explanatory purposes and are not limiting. The system 10 can be used to measure various other physiological state information and identify the individual through other biometrics.

The physiological state information and identity of the individual can be displayed by the system 10 via the display component 20 and/or conveyed to other components via the portable memory 24 and/or the network componentry 26 as described in detail above. In addition, the system 10 can leverage a body area network (BAN) 48 to convey the physiological state and identity information to other components and/or networks.

One or more sensors and/or emitters 50 are also suitably placed on the individual to acquire physiological information. The one or more sensors and/or emitters 50 capture Electrocardiograms (ECGs), Electroencephalograms (EEGs), Electromyograms (EMGs), non-invasive blood pressure (NiBP), pulse, respirations, blood oxygen (SpO2), etc. In addition, the one or more sensors and/or emitters 50 can transmit information such as current medications, scheduled procedures, etc. The network component 26 can convey the associated physiological measurement and the associated patient identification of the present patient, or potentially other patients, to a corresponding receiving element of the body area network. These measurements and associated identifications are transmitted or otherwise communicated with the other data from the body area network.

FIGURE 7 illustrates a method for using the physiological measurement system to concurrently measure temperature and identify an individual via an ear of the individual. At 52, a shaft that houses an ear thermometer measuring device and ear identification device is suitably positioned in the ear canal of the individual. Prior to insertion, an optional sheath can be placed over the end of the shaft to protect the shaft and individuals from contamination.



InductEV, Inc.
Exhibit 1025
Page 1650

At 54, the ear thermometer measures a temperature of the individual. In one embodiment, the ear thermometer includes thermoelectric componentry that uses thermoelectric current to measure temperature by reading infrared heat waves released by the eardrum. A converter converts the measured heat waves into electric signals representative of temperature. In other embodiments, other techniques can be used to measure the temperature.

Concurrently, at 56, the ear identification device identifies the individual through unique characteristics of the ear. In one embodiment, a reflected sound technique is used in which a sound wave is emitted into the ear and a reflected sound wave is captured. The reflected sound wave is characteristic of the eardrum and is unique to the individual. In another embodiment, an otoacoustic approach is used in which a spontaneous or evoked otoacoustic emission generated via a number of different cellular mechanisms within the inner ear is captured. Similarly, this emission is characteristic of the eardrum and is unique to the individual.

At 58, the temperature and identification of the individual is associated. The temperature and identification of the individual can be displayed by the person taking the measurements. Optionally, the temperature and identification of the individual can be locally stored and/or conveyed to other components through network componentry, portable storage, and/or a body area network.

The invention has been described with reference to the preferred embodiments. Modifications and alterations may occur to others upon reading and understanding the preceding detailed description. It is intended that the invention be constructed as including all such modifications and alterations insofar as they come within the scope of the appended claims or the equivalents thereof.



InductEV, Inc.
Exhibit 1025
Page 1651

## CLAIMS

1. A physiological measurement device (10) that concurrently measures a physiological state of an individual and determines an identity of the individual, comprising:

a measurement component (12) that measures the physiological state of the individual;

an identification component (14) that concurrently determines the identity of the individual; and

a processing component (16) that associates the physiological state of the individual with the identity of the individual.

2. The physiological measurement device (10) as set forth in claim 1, wherein the measurement component (12) includes an electronic ear thermometer (28) that measures a temperature of the individual from an ear of the individual.

3. The physiological measurement device (10) as set forth in claim 1, wherein the identification component (14) determines the identity of the individual from the same information used by the measurement component (12) to determine the physiological state of the individual.

4. The physiological measurement device (10) as set forth in claim 1, wherein the identification component (14) uses one of a reflected sound and an otoacoustic technique to determine the identity of the individual.

5. The physiological measurement device (10) as set forth in claim 1, wherein the measurement component (12) measures at least one of temperature, blood pressure, eye pressure, heart rate, heart electrical activity, pulse, and blood oxygen level of the individual.



InductEV, Inc.
Exhibit 1025
Page 1652

6. The physiological measurement device (10) as set forth in claim 1, wherein the identification component (14) determines the identity of the individual through biometric identification including at least one of a unique physical characteristic of an ear, a fingerprint, and an iris map.

7. The physiological measurement device (10) as set forth in claim 1, further including:

a storage component (18) for storing multiple temperatures for a plurality of individuals, wherein each temperature is associated with a corresponding individual based on the identity of the individual as determined by the identification component (14).

8. The physiological measurement device (10) as set forth in claim 1, further including:

a display component (20) for displaying the temperature and the identity of the individual.

9. The physiological measurement device (10) as set forth in claim 1, further including:

portable storage (24) for transferring stored temperatures and identity information from the system (10) to devices that reads the portable storage (24).

10. The physiological measurement device (10) as set forth in claim 1, further including:

a network component (26) for conveying the temperature and the identity of the individual to other devices over a network.

11. The physiological measurement device (10) as set forth in claim 1, further including:

a shaft (36) that houses the measurement component (12) and the identification component (14), the shaft (36) is designed to be inserted within an ear of the individual.



InductEV, Inc.
Exhibit 1025
Page 1653

12. The physiological measurement device (10) as set forth in claim 1, the physiological measurement system (10) uses a local body area network to convey the physiological state information and the identity of the individual to other components.

13. An ear thermometer with ear identification device (10), comprising:

a probe (36) including:

an ear thermometer (28) that measures a temperature of an individual, and

an identification component (14) that determines an identity of the individual, the identification component (14);

a processing component (16) that associates the temperature with the identity; and

a display component (20) for presenting the temperature and an indication of the identity of the individual.

14. The ear thermometer with ear identification device (10) as set forth in claim 13, wherein the ear thermometer (28) includes:

a sensor that captures signals emitted from within an ear canal; and

a signal processing system that converts the collected signal to a temperature.

15. The ear thermometer with ear identification device (10) as set forth in claim 13, wherein the sensor is an infrared sensor that captures heat waves emitted from within an ear of the individual.

16. The ear thermometer with ear identification device (10) as set forth in claim 13, wherein the identification component (14) includes a plurality of transceivers (40) that emit acoustic signals into an ear canal of the individual and that receive signals reflected from the physical structured within the ear, wherein the received signals uniquely identify the individual.



InductEV, Inc.
Exhibit 1025
Page 1654

17. The ear thermometer with ear identification device (10) as set forth in claim 13, wherein the identification component (14) uses one of a reflected sound and an otoacoustic approach to determine the identity of the individual.

18. The ear thermometer with ear identification device (10) as set forth in claim 13, further including at least one of:

portable storage (24); and

a network component (26) for transferring the temperature and the identity of the individual to other devices.

19. A method for measuring a physiological state of an individual and determining an identity the individual, comprising:

concurrently determining:

a physiological state of the individual, and

an identity of the individual; and

associating the physiological state with the identity of the individual.

20. The method as set forth in claim 19, wherein the physiological state is one of a temperature, a blood pressure, an eye pressure, a heart rate, a heart electrical signal, a pulse, and a blood oxygen level.

21. The method as set forth in claim 19, further including:

storing a plurality of temperatures, each of which is associated with an identity of a corresponding individual;

displaying the plurality of temperatures with the identity information; and

transferring the stored temperatures and identity information to at least one other device.



InductEV, Inc.
Exhibit 1025
Page 1655

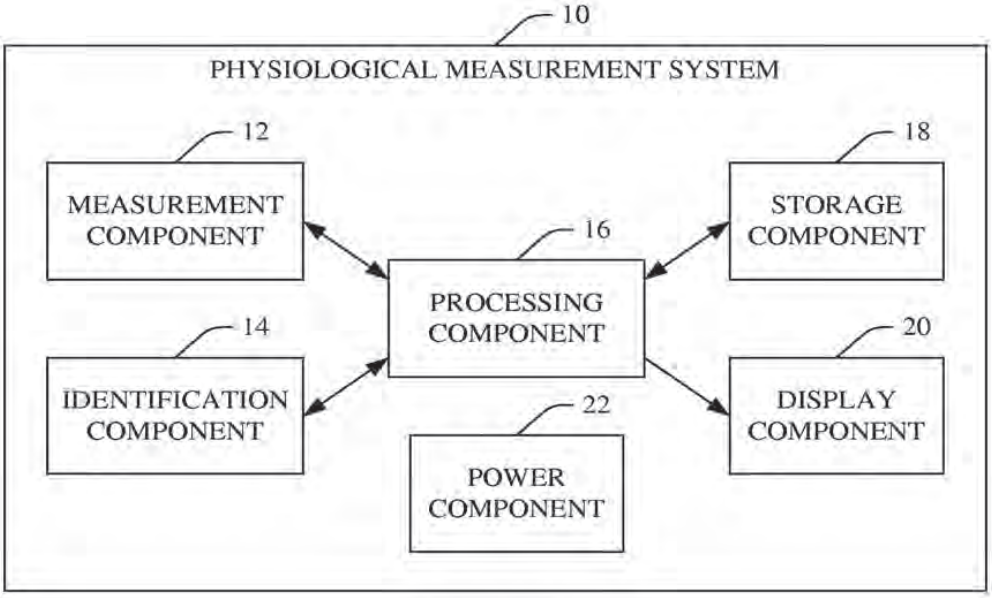


FIGURE 1

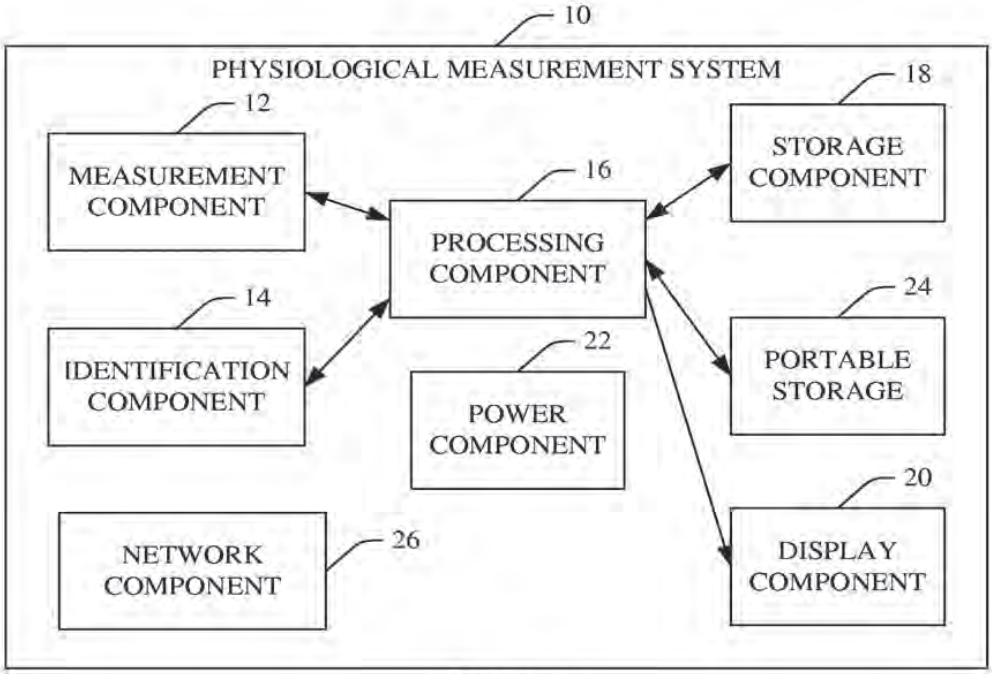


FIGURE 2

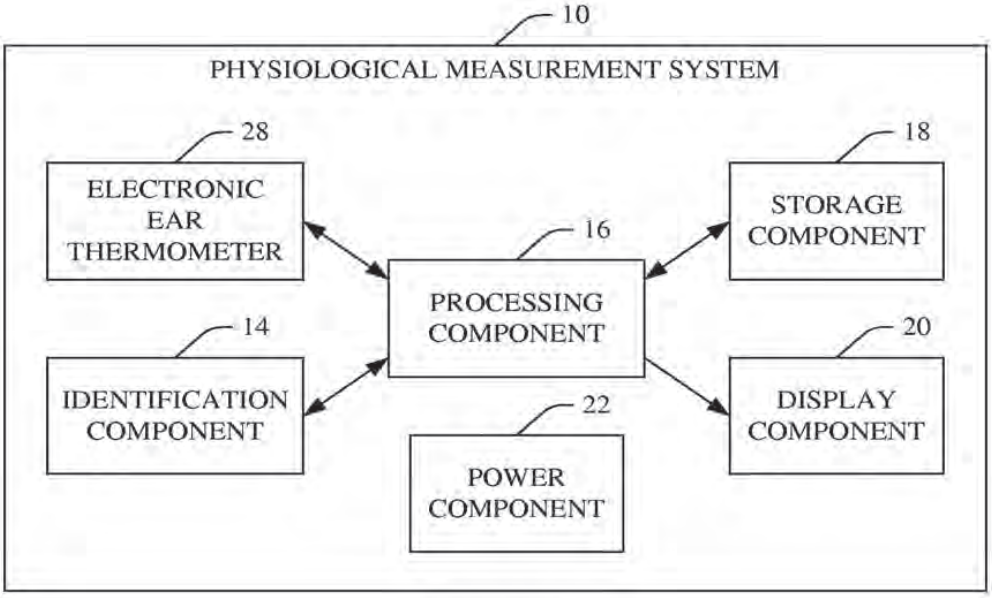


FIGURE 3

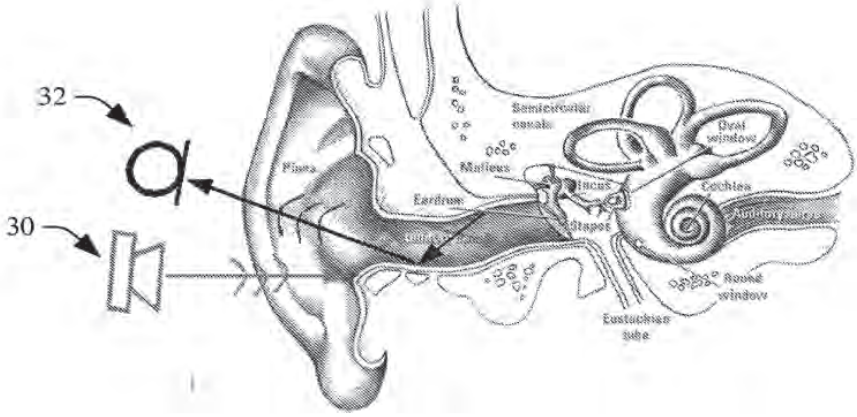


FIGURE 4

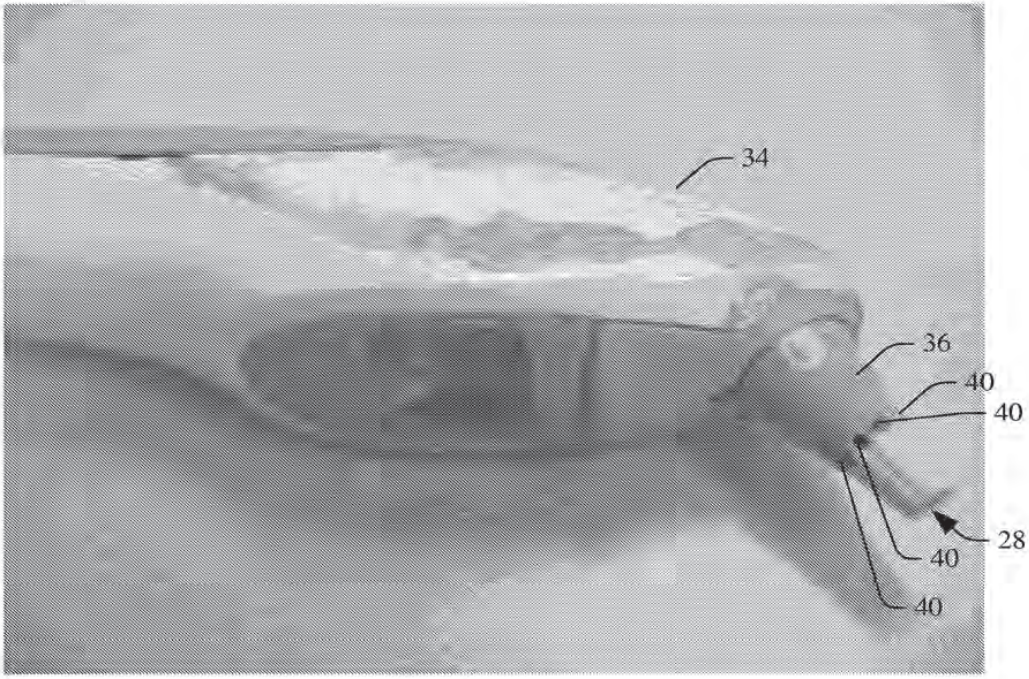


FIGURE 5

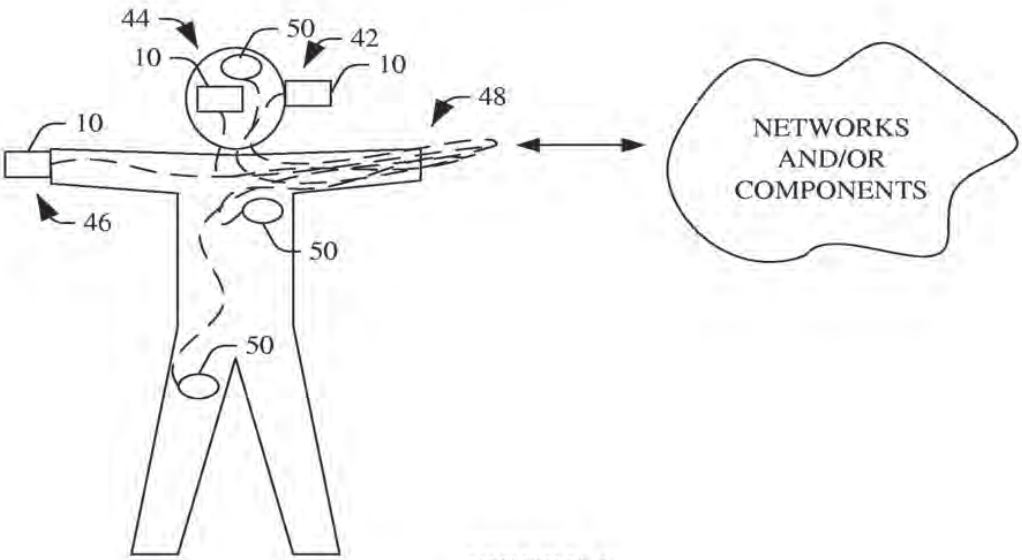


FIGURE 6

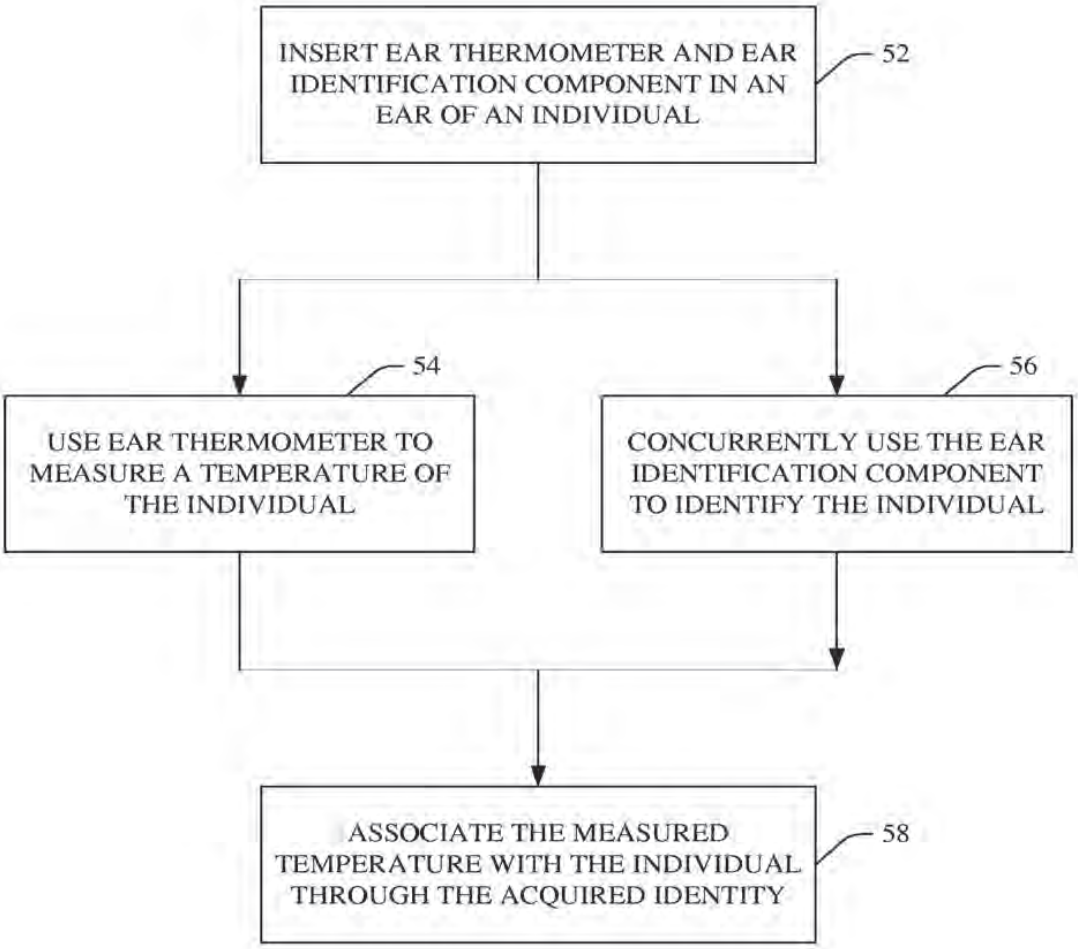
INSERT EAR THERMOMETER AND EAR IDENTIFICATION COMPONENT IN AN EAR OF AN INDIVIDUAL
52
54
USE EAR THERMOMETER TO MEASURE A TEMPERATURE OF THE INDIVIDUAL
56
CONCURRENTLY USE THE EAR IDENTIFICATION COMPONENT TO IDENTIFY THE INDIVIDUAL
ASSOCIATE THE MEASURED TEMPERATURE WITH THE INDIVIDUAL THROUGH THE ACQUIRED IDENTITY
58

FIGURE 7

# INTERNATIONAL SEARCH REPORT

International application No
PCT/IB2006/053299

**A. CLASSIFICATION OF SUBJECT MATTER**
INV. A61B5/117

*According to International Patent Classification (IPC) or to both national classification and IPC*

**B. FIELDS SEARCHED**

Minimum documentation searched (classification system followed by classification symbols)
A61B G01K

Documentation searched other than minimum documentation to the extent that such documents are included in the fields searched

Electronic data base consulted during the international search (name of data base and, where practical, search terms used)

EPO-Internal, BIOSIS

**C. DOCUMENTS CONSIDERED TO BE RELEVANT**

| Category* | Citation of document, with indication, where appropriate, of the relevant passages | Relevant to claim No. |
|---|---|---|
| X<br>A | US 6 643 531 B1 (KATAROW FRANK [US])<br>4 November 2003 (2003-11-04)<br>column 1, line 25 - column 2, line 32<br>column 3, line 1 - column 5, line 15<br>----- | 1,5,6,<br>12,19,20<br>7-10 |
| X<br>Y | US 2005/083993 A1 (HSIEH CHIN-CHIH [TW])<br>21 April 2005 (2005-04-21)<br>the whole document<br>----- | 1,2,5-8,<br>11,13-15<br>16 |
| X<br>Y | EP 1 465 117 A (HOTZ MICHEL ANDRE [CH];<br>HAUSER ROLF [DE])<br>6 October 2004 (2004-10-06)<br>paragraphs [0004] - [0010], [0015],<br>[0016]<br>----- | 1,3,4,6,<br>19<br><br>16 |
| X | US 2002/125991 A1 (LEVIN PAUL D [US])<br>12 September 2002 (2002-09-12)<br>paragraphs [0009] - [0011]<br>----- | 1,3,5,19 |

-/--

[X] Further documents are listed in the continuation of Box C.

[X] See patent family annex.

* *Special categories of cited documents :*

"A" document defining the general state of the art which is not considered to be of particular relevance
"E" earlier document but published on or after the international filing date
"L" document which may throw doubts on priority claim(s) or which is cited to establish the publication date of another citation or other special reason (as specified)
"O" document referring to an oral disclosure, use, exhibition or other means
"P" document published prior to the international filing date but later than the priority date claimed

"T" later document published after the international filing date or priority date and not in conflict with the application but cited to understand the principle or theory underlying the invention
"X" document of particular relevance; the claimed invention cannot be considered novel or cannot be considered to involve an inventive step when the document is taken alone
"Y" document of particular relevance; the claimed invention cannot be considered to involve an inventive step when the document is combined with one or more other such documents, such combination being obvious to a person skilled in the art.
"&" document member of the same patent family

| Date of the actual completion of the international search | Date of mailing of the international search report |
|---|---|
| 13 February 2007 | 26/02/2007 |
| Name and mailing address of the ISA/<br>European Patent Office, P.B. 5818 Patentlaan 2<br>NL – 2280 HV Rijswijk<br>Tel. (+31-70) 340-2040, Tx. 31 651 epo nl,<br>Fax: (+31-70) 340-3016 | Authorized officer<br>Manschot, Jan |

Form PCT/ISA/210 (second sheet) (April 2005)

# INTERNATIONAL SEARCH REPORT

International application No
PCT/IB2006/053299

C(Continuation). DOCUMENTS CONSIDERED TO BE RELEVANT

| Category* | Citation of document, with indication, where appropriate, of the relevant passages | Relevant to claim No. |
|---|---|---|
| X | US 2004/240712 A1 (ROWE ROBERT K [US] ET AL ROWE ROBERT K [US] ET AL) 2 December 2004 (2004-12-02) paragraphs [0015] - [0020], [0074]; claims 1,22-25 | 1,3 |
| P,X | EP 1 634 530 A (IBM [US]) 15 March 2006 (2006-03-15) paragraphs [0003] - [0008], [0033] - [0038] | 1,2,5, 7-15, 18-21 |
| A | US 5 919 143 A (JENKINS GEOFFREY [US] ET AL) 6 July 1999 (1999-07-06) the whole document | 1-16 |

Form PCT/ISA/210 (continuation of second sheet) (April 2005)

# INTERNATIONAL SEARCH REPORT

*Information on patent family members*

International application No
PCT/IB2006/053299

| Patent document cited in search report | | Publication date | Patent family member(s) | | | Publication date |
|---|---|---|---|---|---|---|
| US 6643531 | B1 | 04-11-2003 | AU | 2003259837 | A1 | 11-03-2004 |
| | | | CA | 2496359 | A1 | 04-03-2004 |
| | | | CN | 1688246 | A | 26-10-2005 |
| | | | EP | 1545300 | A1 | 29-06-2005 |
| | | | JP | 2005536282 | T | 02-12-2005 |
| | | | KR | 20050067385 | A | 01-07-2005 |
| | | | WO | 2004017828 | A1 | 04-03-2004 |
| US 2005083993 | A1 | 21-04-2005 | DE | 202004000813 | U1 | 01-04-2004 |
| | | | FR | 2861173 | A3 | 22-04-2005 |
| | | | TW | 244878 | Y | 01-10-2004 |
| EP 1465117 | A | 06-10-2004 | NONE | | | |
| US 2002125991 | A1 | 12-09-2002 | NONE | | | |
| US 2004240712 | A1 | 02-12-2004 | US | 2005205667 | A1 | 22-09-2005 |
| | | | US | 2006002597 | A1 | 05-01-2006 |
| | | | US | 2006002598 | A1 | 05-01-2006 |
| | | | US | 2006210120 | A1 | 21-09-2006 |
| | | | US | 2006202028 | A1 | 14-09-2006 |
| EP 1634530 | A | 15-03-2006 | NONE | | | |
| US 5919143 | A | 06-07-1999 | NONE | | | |

# Electronic Acknowledgement Receipt

| | |
|---|---|
| **EFS ID:** | 18777637 |
| **Application Number:** | 12639963 |
| **International Application Number:** | |
| **Confirmation Number:** | 7811 |
| **Title of Invention:** | WIRELESS ENERGY TRANSFER WITH HIGH-Q TO MORE THAN ONE DEVICE |
| **First Named Inventor/Applicant Name:** | John D. Joannopoulos |
| **Customer Number:** | 26161 |
| **Filer:** | Marc M. Wefers/Cheryl Forrest |
| **Filer Authorized By:** | Marc M. Wefers |
| **Attorney Docket Number:** | 01997-0359009 / MIT 11757 |
| **Receipt Date:** | 16-APR-2014 |
| **Filing Date:** | 16-DEC-2009 |
| **Time Stamp:** | 13:11:06 |
| **Application Type:** | Utility under 35 USC 111(a) |

## Payment information:

| | |
|---|---|
| Submitted with Payment | no |

## File Listing:

| Document Number | Document Description | File Name | File Size(Bytes)/ Message Digest | Multi Part /.zip | Pages (if appl.) |
|---|---|---|---|---|---|
| 1 | | Reply.pdf | 91860<br>e78cb07f1db10dc8bfb637ce9e05e4f19c60b0c3 | yes | 10 |

| | | | | | |
|---|---|---|---|---|---|
| | **Multipart Description/PDF files in .zip description** | | | | |
| | **Document Description** | | **Start** | **End** | |
| | Amendment/Req. Reconsideration-After Non-Final Reject | | 1 | 1 | |
| | Claims | | 2 | 8 | |
| | Applicant Arguments/Remarks Made in an Amendment | | 9 | 10 | |
| **Warnings:** | | | | | |
| **Information:** | | | | | |
| 2 | | IDS.pdf | 169684<br>198485976980e7b8d5fd1399646a32e0046ac123 | yes | 6 |
| | **Multipart Description/PDF files in .zip description** | | | | |
| | **Document Description** | | **Start** | **End** | |
| | Transmittal Letter | | 1 | 1 | |
| | Information Disclosure Statement (IDS) Form (SB08) | | 2 | 6 | |
| **Warnings:** | | | | | |
| **Information:** | | | | | |
| 3 | Foreign Reference | FA95.pdf | 209481<br>d6dd6004fa65197af248d178111cd0dfa720f7f1 | no | 9 |
| **Warnings:** | | | | | |
| **Information:** | | | | | |
| 4 | Foreign Reference | FA96.pdf | 476658<br>d1abd793a2c96a42d250a51cb2d6a87cd0572bd7 | no | 11 |
| **Warnings:** | | | | | |
| **Information:** | | | | | |
| 5 | Foreign Reference | FA97.pdf | 751370<br>f11dba8014cfd53a61c63c687cd3c7aae793ca84 | no | 17 |
| **Warnings:** | | | | | |
| **Information:** | | | | | |
| 6 | Foreign Reference | FA98.pdf | 1962228<br>5757589196645 9d9d5387e28f924772b31f7306b | no | 45 |
| **Warnings:** | | | | | |
| **Information:** | | | | | |

| | | | | | |
|---|---|---|---|---|---|
| 7 | Foreign Reference | FA99.pdf | 2527609<br>8c1151b71bf034d5df32a2b137580520b25fe502 | no | 52 |
| **Warnings:** | | | | | |
| **Information:** | | | | | |
| 8 | Foreign Reference | FA100.pdf | 405382<br>bcc6fecccc83089c7b30052edc79de74e4a81100 | no | 23 |
| **Warnings:** | | | | | |
| **Information:** | | | | | |
| 9 | Foreign Reference | FA101.pdf | 520641<br>1d127847c0fab60a858be169bf91f20b1c304351 | no | 23 |
| **Warnings:** | | | | | |
| **Information:** | | | | | |
| 10 | Foreign Reference | FA102.pdf | 609977<br>0ef0621fe3d089803ba73020f86a9f846137 0ac2 | no | 17 |
| **Warnings:** | | | | | |
| **Information:** | | | | | |
| 11 | Foreign Reference | FA103.pdf | 1174094<br>1026f9000da7fcd65441fe696352a5223e4 6e887 | no | 22 |
| **Warnings:** | | | | | |
| **Information:** | | | | | |
| 12 | Foreign Reference | FA104.pdf | 1277471<br>2cff565ec8d4ec1e52e29ba64ad48f4e16884bd | no | 23 |
| **Warnings:** | | | | | |
| **Information:** | | | | | |
| 13 | Non Patent Literature | NPL105.pdf | 532688<br>c0141794409447720294294d89fe691fa9e943e2 | no | 3 |
| **Warnings:** | | | | | |
| **Information:** | | | | | |
| 14 | Non Patent Literature | NPL106.pdf | 1949323<br>72a323a140ecc6417b8f9a2fdb395ad8ab53ffbc | no | 9 |
| **Warnings:** | | | | | |
| **Information:** | | | | | |
| 15 | Non Patent Literature | NPL107.pdf | 294487<br>b5f6a9b005b6cccfdded7b48[illegible]a05ae1262cea | no | 6 |
| **Warnings:** | | | | | |
| **Information:** | | | | | |

| | | | | | |
|---|---|---|---|---|---|
| 16 | Non Patent Literature | NPL108.pdf | 994013<br>5e5d23b9f7b57c4d96b91534b111f5f62d91b10c | no | 18 |
| **Warnings:** | | | | | |
| **Information:** | | | | | |
| 17 | Non Patent Literature | NPL109.pdf | 920063<br>bff7088667801ac692bfe300dcbfc4f07d17a01 | no | 16 |
| **Warnings:** | | | | | |
| **Information:** | | | | | |
| 18 | Non Patent Literature | NPL110.pdf | 926295<br>09805886b6a25163c25c765a5d649e8e85e98de4 | no | 16 |
| **Warnings:** | | | | | |
| **Information:** | | | | | |
| 19 | Non Patent Literature | NPL111.pdf | 942724<br>863d7542813c9cf58a76bdc380691ffaf7c561bd | no | 17 |
| **Warnings:** | | | | | |
| **Information:** | | | | | |
| 20 | Non Patent Literature | NPL112.pdf | 253303<br>cbc17c5df467fe76e47dc02cdf6300bb71a86144 | no | 4 |
| **Warnings:** | | | | | |
| **Information:** | | | | | |
| 21 | Non Patent Literature | NPL113.pdf | 845460<br>ac63ee3f99d91e2eec63e5a173302f12238c2f94 | no | 4 |
| **Warnings:** | | | | | |
| **Information:** | | | | | |
| | | **Total Files Size (in bytes):** | 17834811 | | |

This Acknowledgement Receipt evidences receipt on the noted date by the USPTO of the indicated documents, characterized by the applicant, and including page counts, where applicable. It serves as evidence of receipt similar to a Post Card, as described in MPEP 503.

New Applications Under 35 U.S.C. 111

If a new application is being filed and the application includes the necessary components for a filing date (see 37 CFR 1.53(b)-(d) and MPEP 506), a Filing Receipt (37 CFR 1.54) will be issued in due course and the date shown on this Acknowledgement Receipt will establish the filing date of the application.

National Stage of an International Application under 35 U.S.C. 371

If a timely submission to enter the national stage of an international application is compliant with the conditions of 35 U.S.C. 371 and other applicable requirements a Form PCT/DO/EO/903 indicating acceptance of the application as a national stage submission under 35 U.S.C. 371 will be issued in addition to the Filing Receipt, in due course.

New International Application Filed with the USPTO as a Receiving Office

If a new international application is being filed and the international application includes the necessary components for an international filing date (see PCT Article 11 and MPEP 1810), a Notification of the International Application Number and of the International Filing Date (Form PCT/RO/105) will be issued in due course, subject to prescriptions concerning national security, and the date shown on this Acknowledgement Receipt will establish the international filing date of the application.

PTO/SB/06 (09-11)
Approved for use through 1/31/2014. OMB 0651-0032
U.S. Patent and Trademark Office, U.S. DEPARTMENT OF COMMERCE
Under the Paperwork Reduction Act of 1995, no persons are required to respond to a collection of information unless it displays a valid OMB control number.

| PATENT APPLICATION FEE DETERMINATION RECORD<br>Substitute for Form PTO-875 | Application or Docket Number<br>12/639,963 | Filing Date<br>12/16/2009 | ☐ To be Mailed |
|---|---|---|---|

ENTITY: ☒ LARGE ☐ SMALL ☐ MICRO

## APPLICATION AS FILED – PART I

| FOR | (Column 1) NUMBER FILED | (Column 2) NUMBER EXTRA | RATE ($) | FEE ($) |
|---|---|---|---|---|
| ☐ BASIC FEE (37 CFR 1.16(a), (b), or (c)) | N/A | N/A | N/A | |
| ☐ SEARCH FEE (37 CFR 1.16(k), (l), or (m)) | N/A | N/A | N/A | |
| ☐ EXAMINATION FEE (37 CFR 1.16(o), (p), or (q)) | N/A | N/A | N/A | |
| TOTAL CLAIMS (37 CFR 1.16(i)) | minus 20 = | * | X $ = | |
| INDEPENDENT CLAIMS (37 CFR 1.16(h)) | minus 3 = | * | X $ = | |
| ☐ APPLICATION SIZE FEE (37 CFR 1.16(s)) | If the specification and drawings exceed 100 sheets of paper, the application size fee due is $310 ($155 for small entity) for each additional 50 sheets or fraction thereof. See 35 U.S.C. 41(a)(1)(G) and 37 CFR 1.16(s). | | | |
| ☐ MULTIPLE DEPENDENT CLAIM PRESENT (37 CFR 1.16(j)) | | | | |
| * If the difference in column 1 is less than zero, enter "0" in column 2. | | | TOTAL | |

## APPLICATION AS AMENDED – PART II

| AMENDMENT 04/16/2014 | (Column 1) CLAIMS REMAINING AFTER AMENDMENT | | (Column 2) HIGHEST NUMBER PREVIOUSLY PAID FOR | (Column 3) PRESENT EXTRA | RATE ($) | ADDITIONAL FEE ($) |
|---|---|---|---|---|---|---|
| Total (37 CFR 1.16(i)) | * 44 | Minus | ** 50 | = 0 | X $80 = | 0 |
| Independent (37 CFR 1.16(h)) | * 2 | Minus | ***3 | = 0 | X $420 = | 0 |
| ☐ Application Size Fee (37 CFR 1.16(s)) | | | | | | |
| ☐ FIRST PRESENTATION OF MULTIPLE DEPENDENT CLAIM (37 CFR 1.16(j)) | | | | | | |
| | | | | | TOTAL ADD'L FEE | 0 |

| AMENDMENT | (Column 1) CLAIMS REMAINING AFTER AMENDMENT | | (Column 2) HIGHEST NUMBER PREVIOUSLY PAID FOR | (Column 3) PRESENT EXTRA | RATE ($) | ADDITIONAL FEE ($) |
|---|---|---|---|---|---|---|
| Total (37 CFR 1.16(i)) | * | Minus | ** | = | X $ = | |
| Independent (37 CFR 1.16(h)) | * | Minus | *** | = | X $ = | |
| ☐ Application Size Fee (37 CFR 1.16(s)) | | | | | | |
| ☐ FIRST PRESENTATION OF MULTIPLE DEPENDENT CLAIM (37 CFR 1.16(j)) | | | | | | |
| | | | | | TOTAL ADD'L FEE | |

* If the entry in column 1 is less than the entry in column 2, write "0" in column 3.
** If the "Highest Number Previously Paid For" IN THIS SPACE is less than 20, enter "20".
*** If the "Highest Number Previously Paid For" IN THIS SPACE is less than 3, enter "3".
The "Highest Number Previously Paid For" (Total or Independent) is the highest number found in the appropriate box in column 1.

LIE
/ROSS W. BROWN/

This collection of information is required by 37 CFR 1.16. The information is required to obtain or retain a benefit by the public which is to file (and by the USPTO to process) an application. Confidentiality is governed by 35 U.S.C. 122 and 37 CFR 1.14. This collection is estimated to take 12 minutes to complete, including gathering, preparing, and submitting the completed application form to the USPTO. Time will vary depending upon the individual case. Any comments on the amount of time you require to complete this form and/or suggestions for reducing this burden, should be sent to the Chief Information Officer, U.S. Patent and Trademark Office, U.S. Department of Commerce, P.O. Box 1450, Alexandria, VA 22313-1450. DO NOT SEND FEES OR COMPLETED FORMS TO THIS ADDRESS. **SEND TO: Commissioner for Patents, P.O. Box 1450, Alexandria, VA 22313-1450.**
*If you need assistance in completing the form, call 1-800-PTO-9199 and select option 2.*

UNITED STATES PATENT AND TRADEMARK OFFICE

UNITED STATES DEPARTMENT OF COMMERCE
United States Patent and Trademark Office
Address: COMMISSIONER FOR PATENTS
P.O. Box 1450
Alexandria, Virginia 22313-1450
www.uspto.gov

# NOTICE OF ALLOWANCE AND FEE(S) DUE

26161 7590 05/08/2014
FISH & RICHARDSON P.C. (BO)
P.O. BOX 1022
MINNEAPOLIS, MN 55440-1022

| EXAMINER |
|---|
| FLEMING, FRITZ M |

| ART UNIT | PAPER NUMBER |
|---|---|
| 2836 | |

DATE MAILED: 05/08/2014

| APPLICATION NO. | FILING DATE | FIRST NAMED INVENTOR | ATTORNEY DOCKET NO. | CONFIRMATION NO. |
|---|---|---|---|---|
| 12/639,963 | 12/16/2009 | John D. Joannopoulos | 01997-0359009 / MIT 11757 | 7811 |

TITLE OF INVENTION: WIRELESS ENERGY TRANSFER WITH HIGH-Q TO MORE THAN ONE DEVICE

| APPLN. TYPE | ENTITY STATUS | ISSUE FEE DUE | PUBLICATION FEE DUE | PREV. PAID ISSUE FEE | TOTAL FEE(S) DUE | DATE DUE |
|---|---|---|---|---|---|---|
| nonprovisional | UNDISCOUNTED | $960 | $0 | $0 | $960 | 08/08/2014 |

**THE APPLICATION IDENTIFIED ABOVE HAS BEEN EXAMINED AND IS ALLOWED FOR ISSUANCE AS A PATENT. PROSECUTION ON THE MERITS IS CLOSED. THIS NOTICE OF ALLOWANCE IS NOT A GRANT OF PATENT RIGHTS. THIS APPLICATION IS SUBJECT TO WITHDRAWAL FROM ISSUE AT THE INITIATIVE OF THE OFFICE OR UPON PETITION BY THE APPLICANT. SEE 37 CFR 1.313 AND MPEP 1308.**

**THE ISSUE FEE AND PUBLICATION FEE (IF REQUIRED) MUST BE PAID WITHIN THREE MONTHS FROM THE MAILING DATE OF THIS NOTICE OR THIS APPLICATION SHALL BE REGARDED AS ABANDONED. THIS STATUTORY PERIOD CANNOT BE EXTENDED. SEE 35 U.S.C. 151. THE ISSUE FEE DUE INDICATED ABOVE DOES NOT REFLECT A CREDIT FOR ANY PREVIOUSLY PAID ISSUE FEE IN THIS APPLICATION. IF AN ISSUE FEE HAS PREVIOUSLY BEEN PAID IN THIS APPLICATION (AS SHOWN ABOVE), THE RETURN OF PART B OF THIS FORM WILL BE CONSIDERED A REQUEST TO REAPPLY THE PREVIOUSLY PAID ISSUE FEE TOWARD THE ISSUE FEE NOW DUE.**

**HOW TO REPLY TO THIS NOTICE:**

I. Review the ENTITY STATUS shown above. If the ENTITY STATUS is shown as SMALL or MICRO, verify whether entitlement to that entity status still applies.

If the ENTITY STATUS is the same as shown above, pay the TOTAL FEE(S) DUE shown above.

If the ENTITY STATUS is changed from that shown above, on PART B - FEE(S) TRANSMITTAL, complete section number 5 titled "Change in Entity Status (from status indicated above)".

For purposes of this notice, small entity fees are 1/2 the amount of undiscounted fees, and micro entity fees are 1/2 the amount of small entity fees.

II. PART B - FEE(S) TRANSMITTAL, or its equivalent, must be completed and returned to the United States Patent and Trademark Office (USPTO) with your ISSUE FEE and PUBLICATION FEE (if required). If you are charging the fee(s) to your deposit account, section "4b" of Part B - Fee(s) Transmittal should be completed and an extra copy of the form should be submitted. If an equivalent of Part B is filed, a request to reapply a previously paid issue fee must be clearly made, and delays in processing may occur due to the difficulty in recognizing the paper as an equivalent of Part B.

III. All communications regarding this application must give the application number. Please direct all communications prior to issuance to Mail Stop ISSUE FEE unless advised to the contrary.

**IMPORTANT REMINDER: Utility patents issuing on applications filed on or after Dec. 12, 1980 may require payment of maintenance fees. It is patentee's responsibility to ensure timely payment of maintenance fees when due.**



PTOL-85 (Rev. 02/11)

## PART B - FEE(S) TRANSMITTAL

**Complete and send this form, together with applicable fee(s), to: Mail Mail Stop ISSUE FEE**
**Commissioner for Patents**
**P.O. Box 1450**
**Alexandria, Virginia 22313-1450**
**or Fax (571)-273-2885**

INSTRUCTIONS: This form should be used for transmitting the ISSUE FEE and PUBLICATION FEE (if required). Blocks 1 through 5 should be completed where appropriate. All further correspondence including the Patent, advance orders and notification of maintenance fees will be mailed to the current correspondence address as indicated unless corrected below or directed otherwise in Block 1, by (a) specifying a new correspondence address; and/or (b) indicating a separate "FEE ADDRESS" for maintenance fee notifications.

CURRENT CORRESPONDENCE ADDRESS (Note: Use Block 1 for any change of address)

26161 7590 05/08/2014
FISH & RICHARDSON P.C. (BO)
P.O. BOX 1022
MINNEAPOLIS, MN 55440-1022

Note: A certificate of mailing can only be used for domestic mailings of the Fee(s) Transmittal. This certificate cannot be used for any other accompanying papers. Each additional paper, such as an assignment or formal drawing, must have its own certificate of mailing or transmission.

**Certificate of Mailing or Transmission**
I hereby certify that this Fee(s) Transmittal is being deposited with the United States Postal Service with sufficient postage for first class mail in an envelope addressed to the Mail Stop ISSUE FEE address above, or being facsimile transmitted to the USPTO (571) 273-2885, on the date indicated below.

(Depositor's name)
(Signature)
(Date)

| APPLICATION NO. | FILING DATE | FIRST NAMED INVENTOR | ATTORNEY DOCKET NO. | CONFIRMATION NO. |
|---|---|---|---|---|
| 12/639,963 | 12/16/2009 | John D. Joannopoulos | 01997-0359009 / MIT 11757 | 7811 |

TITLE OF INVENTION: WIRELESS ENERGY TRANSFER WITH HIGH-Q TO MORE THAN ONE DEVICE

| APPLN. TYPE | ENTITY STATUS | ISSUE FEE DUE | PUBLICATION FEE DUE | PREV. PAID ISSUE FEE | TOTAL FEE(S) DUE | DATE DUE |
|---|---|---|---|---|---|---|
| nonprovisional | UNDISCOUNTED | $960 | $0 | $0 | $960 | 08/08/2014 |

| EXAMINER | ART UNIT | CLASS-SUBCLASS |
|---|---|---|
| FLEMING, FRITZ M | 2836 | 307-104000 |

1. Change of correspondence address or indication of "Fee Address" (37 CFR 1.363).
- ☐ Change of correspondence address (or Change of Correspondence Address form PTO/SB/122) attached.
- ☐ "Fee Address" indication (or "Fee Address" Indication form PTO/SB/47; Rev 03-02 or more recent) attached. **Use of a Customer Number is required.**

2. For printing on the patent front page, list
(1) The names of up to 3 registered patent attorneys or agents OR, alternatively,
(2) The name of a single firm (having as a member a registered attorney or agent) and the names of up to 2 registered patent attorneys or agents. If no name is listed, no name will be printed.
1 _____
2 _____
3 _____

3. ASSIGNEE NAME AND RESIDENCE DATA TO BE PRINTED ON THE PATENT (print or type)

PLEASE NOTE: Unless an assignee is identified below, no assignee data will appear on the patent. If an assignee is identified below, the document has been filed for recordation as set forth in 37 CFR 3.11. Completion of this form is NOT a substitute for filing an assignment.

(A) NAME OF ASSIGNEE (B) RESIDENCE: (CITY and STATE OR COUNTRY)

Please check the appropriate assignee category or categories (will not be printed on the patent) : ☐ Individual ☐ Corporation or other private group entity ☐ Government

4a. The following fee(s) are submitted:
- ☐ Issue Fee
- ☐ Publication Fee (No small entity discount permitted)
- ☐ Advance Order - # of Copies _____

4b. Payment of Fee(s): **(Please first reapply any previously paid issue fee shown above)**
- ☐ A check is enclosed.
- ☐ Payment by credit card. Form PTO-2038 is attached.
- ☐ The Director is hereby authorized to charge the required fee(s), any deficiency, or credits any overpayment, to Deposit Account Number _____ (enclose an extra copy of this form).

5. **Change in Entity Status** (from status indicated above)
- ☐ Applicant certifying micro entity status. See 37 CFR 1.29 — NOTE: Absent a valid certification of Micro Entity Status (see forms PTO/SB/15A and 15B), issue fee payment in the micro entity amount will not be accepted at the risk of application abandonment.
- ☐ Applicant asserting small entity status. See 37 CFR 1.27 — NOTE: If the application was previously under micro entity status, checking this box will be taken to be a notification of loss of entitlement to micro entity status.
- ☐ Applicant changing to regular undiscounted fee status. — NOTE: Checking this box will be taken to be a notification of loss of entitlement to small or micro entity status, as applicable.

NOTE: This form must be signed in accordance with 37 CFR 1.31 and 1.33. See 37 CFR 1.4 for signature requirements and certifications.

Authorized Signature _____ Date _____

Typed or printed name _____ Registration No. _____



PTOL-85 Part B (10-13) Approved for use through 10/31/2013. OMB 0651-0033 U.S. Patent and Trademark Office; U.S. DEPARTMENT OF COMMERCE

InductEV, Inc.
Exhibit 1025
Page 1670

UNITED STATES PATENT AND TRADEMARK OFFICE

UNITED STATES DEPARTMENT OF COMMERCE
United States Patent and Trademark Office
Address: COMMISSIONER FOR PATENTS
P.O. Box 1450
Alexandria, Virginia 22313-1450
www.uspto.gov

| APPLICATION NO. | FILING DATE | FIRST NAMED INVENTOR | ATTORNEY DOCKET NO. | CONFIRMATION NO. |
|---|---|---|---|---|
| 12/639,963 | 12/16/2009 | John D. Joannopoulos | 01997-0359009 / MIT 11757 | 7811 |

26161 7590 05/08/2014
FISH & RICHARDSON P.C. (BO)
P.O. BOX 1022
MINNEAPOLIS, MN 55440-1022

| EXAMINER |
|---|
| FLEMING, FRITZ M |

| ART UNIT | PAPER NUMBER |
|---|---|
| 2836 | |

DATE MAILED: 05/08/2014

**Determination of Patent Term Adjustment under 35 U.S.C. 154 (b)**
(Applications filed on or after May 29, 2000)

The Office has discontinued providing a Patent Term Adjustment (PTA) calculation with the Notice of Allowance.

Section 1(h)(2) of the AIA Technical Corrections Act amended 35 U.S.C. 154(b)(3)(B)(i) to eliminate the requirement that the Office provide a patent term adjustment determination with the notice of allowance. See Revisions to Patent Term Adjustment, 78 Fed. Reg. 19416, 19417 (Apr. 1, 2013). Therefore, the Office is no longer providing an initial patent term adjustment determination with the notice of allowance. The Office will continue to provide a patent term adjustment determination with the Issue Notification Letter that is mailed to applicant approximately three weeks prior to the issue date of the patent, and will include the patent term adjustment on the patent. Any request for reconsideration of the patent term adjustment determination (or reinstatement of patent term adjustment) should follow the process outlined in 37 CFR 1.705.

Any questions regarding the Patent Term Extension or Adjustment determination should be directed to the Office of Patent Legal Administration at (571)-272-7702. Questions relating to issue and publication fee payments should be directed to the Customer Service Center of the Office of Patent Publication at 1-(888)-786-0101 or (571)-272-4200.



PTOL-85 (Rev. 02/11)

## OMB Clearance and PRA Burden Statement for PTOL-85 Part B

The Paperwork Reduction Act (PRA) of 1995 requires Federal agencies to obtain Office of Management and Budget approval before requesting most types of information from the public. When OMB approves an agency request to collect information from the public, OMB (i) provides a valid OMB Control Number and expiration date for the agency to display on the instrument that will be used to collect the information and (ii) requires the agency to inform the public about the OMB Control Number's legal significance in accordance with 5 CFR 1320.5(b).

The information collected by PTOL-85 Part B is required by 37 CFR 1.311. The information is required to obtain or retain a benefit by the public which is to file (and by the USPTO to process) an application. Confidentiality is governed by 35 U.S.C. 122 and 37 CFR 1.14. This collection is estimated to take 12 minutes to complete, including gathering, preparing, and submitting the completed application form to the USPTO. Time will vary depending upon the individual case. Any comments on the amount of time you require to complete this form and/or suggestions for reducing this burden, should be sent to the Chief Information Officer, U.S. Patent and Trademark Office, U.S. Department of Commerce, P.O. Box 1450, Alexandria, Virginia 22313-1450. DO NOT SEND FEES OR COMPLETED FORMS TO THIS ADDRESS. SEND TO: Commissioner for Patents, P.O. Box 1450, Alexandria, Virginia 22313-1450. Under the Paperwork Reduction Act of 1995, no persons are required to respond to a collection of information unless it displays a valid OMB control number.

## Privacy Act Statement

**The Privacy Act of 1974 (P.L. 93-579)** requires that you be given certain information in connection with your submission of the attached form related to a patent application or patent. Accordingly, pursuant to the requirements of the Act, please be advised that: (1) the general authority for the collection of this information is 35 U.S.C. 2(b)(2); (2) furnishing of the information solicited is voluntary; and (3) the principal purpose for which the information is used by the U.S. Patent and Trademark Office is to process and/or examine your submission related to a patent application or patent. If you do not furnish the requested information, the U.S. Patent and Trademark Office may not be able to process and/or examine your submission, which may result in termination of proceedings or abandonment of the application or expiration of the patent.

The information provided by you in this form will be subject to the following routine uses:

1. The information on this form will be treated confidentially to the extent allowed under the Freedom of Information Act (5 U.S.C. 552) and the Privacy Act (5 U.S.C 552a). Records from this system of records may be disclosed to the Department of Justice to determine whether disclosure of these records is required by the Freedom of Information Act.
2. A record from this system of records may be disclosed, as a routine use, in the course of presenting evidence to a court, magistrate, or administrative tribunal, including disclosures to opposing counsel in the course of settlement negotiations.
3. A record in this system of records may be disclosed, as a routine use, to a Member of Congress submitting a request involving an individual, to whom the record pertains, when the individual has requested assistance from the Member with respect to the subject matter of the record.
4. A record in this system of records may be disclosed, as a routine use, to a contractor of the Agency having need for the information in order to perform a contract. Recipients of information shall be required to comply with the requirements of the Privacy Act of 1974, as amended, pursuant to 5 U.S.C. 552a(m).
5. A record related to an International Application filed under the Patent Cooperation Treaty in this system of records may be disclosed, as a routine use, to the International Bureau of the World Intellectual Property Organization, pursuant to the Patent Cooperation Treaty.
6. A record in this system of records may be disclosed, as a routine use, to another federal agency for purposes of National Security review (35 U.S.C. 181) and for review pursuant to the Atomic Energy Act (42 U.S.C. 218(c)).
7. A record from this system of records may be disclosed, as a routine use, to the Administrator, General Services, or his/her designee, during an inspection of records conducted by GSA as part of that agency's responsibility to recommend improvements in records management practices and programs, under authority of 44 U.S.C. 2904 and 2906. Such disclosure shall be made in accordance with the GSA regulations governing inspection of records for this purpose, and any other relevant (i.e., GSA or Commerce) directive. Such disclosure shall not be used to make determinations about individuals.
8. A record from this system of records may be disclosed, as a routine use, to the public after either publication of the application pursuant to 35 U.S.C. 122(b) or issuance of a patent pursuant to 35 U.S.C. 151. Further, a record may be disclosed, subject to the limitations of 37 CFR 1.14, as a routine use, to the public if the record was filed in an application which became abandoned or in which the proceedings were terminated and which application is referenced by either a published application, an application open to public inspection or an issued patent.
9. A record from this system of records may be disclosed, as a routine use, to a Federal, State, or local law enforcement agency, if the USPTO becomes aware of a violation or potential violation of law or regulation.

| Notice of Allowability | Application No. 12/639,963 | Applicant(s) JOANNOPOULOS ET AL. | |
|---|---|---|---|
| | Examiner FRITZ M. FLEMING | Art Unit 2836 | AIA (First Inventor to File) Status No |

***-- The MAILING DATE of this communication appears on the cover sheet with the correspondence address--***

All claims being allowable, PROSECUTION ON THE MERITS IS (OR REMAINS) CLOSED in this application. If not included herewith (or previously mailed), a Notice of Allowance (PTOL-85) or other appropriate communication will be mailed in due course. **THIS NOTICE OF ALLOWABILITY IS NOT A GRANT OF PATENT RIGHTS.** This application is subject to withdrawal from issue at the initiative of the Office or upon petition by the applicant. See 37 CFR 1.313 and MPEP 1308.

1. ☒ This communication is responsive to *the amendment filed 4/16/14*.
   ☐ A declaration(s)/affidavit(s) under **37 CFR 1.130(b)** was/were filed on_____.
2. ☐ An election was made by the applicant in response to a restriction requirement set forth during the interview on _____; the restriction requirement and election have been incorporated into this action.
3. ☒ The allowed claim(s) is/are *1-10,12,14-16,18-32,34,36-38,40-50*. As a result of the allowed claim(s), you may be eligible to benefit from the **Patent Prosecution Highway** program at a participating intellectual property office for the corresponding application. For more information, please see http://www.uspto.gov/patents/init_events/pph/index.jsp or send an inquiry to PPHfeedback@uspto.gov.
4. ☐ Acknowledgment is made of a claim for foreign priority under 35 U.S.C. § 119(a)-(d) or (f).

   **Certified copies:**

   a) ☐ All b) ☐ Some *c) ☐ None of the:
   1. ☐ Certified copies of the priority documents have been received.
   2. ☐ Certified copies of the priority documents have been received in Application No. _____ .
   3. ☐ Copies of the certified copies of the priority documents have been received in this national stage application from the International Bureau (PCT Rule 17.2(a)).

   * Certified copies not received: _____.

Applicant has THREE MONTHS FROM THE "MAILING DATE" of this communication to file a reply complying with the requirements noted below. Failure to timely comply will result in ABANDONMENT of this application.
**THIS THREE-MONTH PERIOD IS NOT EXTENDABLE.**

5. ☐ CORRECTED DRAWINGS ( as "replacement sheets") must be submitted.
   ☐ including changes required by the attached Examiner's Amendment / Comment or in the Office action of Paper No./Mail Date _____.

   **Identifying indicia such as the application number (see 37 CFR 1.84(c)) should be written on the drawings in the front (not the back) of each sheet. Replacement sheet(s) should be labeled as such in the header according to 37 CFR 1.121(d).**
6. ☐ DEPOSIT OF and/or INFORMATION about the deposit of BIOLOGICAL MATERIAL must be submitted. Note the attached Examiner's comment regarding REQUIREMENT FOR THE DEPOSIT OF BIOLOGICAL MATERIAL.

**Attachment(s)**

1. ☐ Notice of References Cited (PTO-892)
2. ☒ Information Disclosure Statements (PTO/SB/08), Paper No./Mail Date 4/16/14
3. ☐ Examiner's Comment Regarding Requirement for Deposit of Biological Material
4. ☐ Interview Summary (PTO-413), Paper No./Mail Date _____ .
5. ☐ Examiner's Amendment/Comment
6. ☐ Examiner's Statement of Reasons for Allowance
7. ☐ Other _____.

/FRITZ M FLEMING/
Primary Examiner, Art Unit 2836



InductEV, Inc.
Exhibit 1025
Page 1673

| Substitute Disclosure Form | U.S. Department of Commerce Patent and Trademark Office | Attorney Docket No. 01997-0359009 | Application No. 12/639,963 |
|---|---|---|---|
| **Information Disclosure Statement by Applicant** (Use several sheets if necessary) | | First Named Inventor John D. Joannopoulos | |
| (37 CFR §1.98(b)) | | Filing Date December 16, 2009 | Group Art Unit 2836 |

**U.S. Patent Documents**

| Examiner Initial | Desig. ID | Document Number | Publication Date | Patentee | Class | Subclass | Filing Date If Appropriate |
|---|---|---|---|---|---|---|---|
| | 1 | 3,780,425 | 12/25/1973 | Alan, William | | | |
| | 2 | 3,871,176 | 3/18/1975 | Schukei, Glen Elwin | | | |
| | 3 | 4,095,998 | 6/20/1978 | Hanson, Charles M. | | | |
| | 4 | 4,280,129 | 7/21/1981 | Wells, Donald H. | | | |
| | 5 | 5,229,652 | 7/20/1993 | HOUGH;, WAYNE | | | |
| | 6 | 5,408,209 | 4/18/1995 | Tanzer, Herbert J., et al. | | | |
| | 7 | 5,522,856 | 6/4/1996 | Reineman, Henk | | | |
| | 8 | 5,541,604 | 7/30/1996 | Meier, Herbert | | | |
| | 9 | 5,565,763 | 10/15/1996 | Arrendale, Hubert G., et al. | | | |
| | 10 | 5,630,835 | 5/20/1997 | Brownlee, Robert R. | | | |
| | 11 | 5,697,956 | 12/16/1997 | Bornzin, Gene A. | | | |
| | 12 | 5,703,461 | 12/30/1997 | Minoshima, Norimoto et al. | | | |
| | 13 | 5,710,413 | 1/20/1998 | KING, JAMES et al. | | | |
| | 14 | 5,742,471 | 4/21/1998 | Barbee Jr., Troy W., et al. | | | |
| | 15 | 5,821,728 | 10/13/1998 | SCHWIND;, JOHN | | | |
| | 16 | 5,821,731 | 10/13/1998 | Kuki, Heiji et al. | | | |
| | 17 | 5,903,134 | 5/11/1999 | TAKEUCHI;, YASUO | | | |
| | 18 | 5,923,544 | 7/13/1999 | Urano, Takashi | | | |
| | 19 | 5,940,509 | 8/17/1999 | Jovanovich, Alan et al. | | | |
| | 20 | 5,957,956 | 9/28/1999 | Kroll, Mark W., et al. | | | |
| | 21 | 5,959,245 | 9/28/1999 | Moe et al. | | | |
| | 22 | 5,993,996 | 11/30/1999 | Firsich, David W. | | | |
| | 23 | 6,012,659 | 1/11/2000 | Nakazawa, Yuji et al. | | | |
| | 24 | 6,047,214 | 4/4/2000 | Mueller, Jeffrey S., et al. | | | |
| | 25 | 6,066,163 | 5/23/2000 | John, Michael Sasha | | | |

| Examiner Signature | Date Considered |
|---|---|
| /Fritz Fleming/ (05/05/2014) | |

EXAMINER: Initials citation considered. Draw line through citation if not in conformance and not considered. Include copy of this form with next communication to applicant.

Substitute Disclosure Form

ALL REFERENCES CONSIDERED EXCEPT WHERE LINED THROUGH. /F.F./

| Substitute Disclosure Form | U.S. Department of Commerce Patent and Trademark Office | Attorney Docket No. 01997-0359009 | Application No. 12/639,963 |
|---|---|---|---|
| **Information Disclosure Statement by Applicant** (Use several sheets if necessary) | | First Named Inventor John D. Joannopoulos | |
| (37 CFR §1.98(b)) | | Filing Date December 16, 2009 | Group Art Unit 2836 |

**U.S. Patent Documents**

| Examiner Initial | Desig. ID | Document Number | Publication Date | Patentee | Class | Subclass | Filing Date If Appropriate |
|---|---|---|---|---|---|---|---|
| | 26 | 6,067,473 | 5/23/2000 | Greeninger, Daniel R., et al. | | | |
| | 27 | 6,108,579 | 8/22/2000 | Snell, Jeffrey D., et al. | | | |
| | 28 | 6,127,799 | 10/3/2000 | Krishnan, Rajesh | | | |
| | 29 | 6,207,887 | 3/27/2001 | Bass, John C., et al. | | | |
| | 30 | 6,232,841 | 5/15/2001 | Bartlett, James L., et al. | | | |
| | 31 | 6,238,387 | 5/29/2001 | Miller, III | | | |
| | 32 | 6,252,762 | 6/26/2001 | Amatucci, Glenn G. | | | |
| | 33 | 6,473,028 | 10/29/2002 | Luc, Wuidart | | | |
| | 34 | 6,483,202 | 11/19/2002 | Boys, John Talbot | | | |
| | 35 | 6,535,133 | 3/18/2003 | Gohara, Takashi | | | |
| | 36 | 6,561,975 | 5/13/2003 | Pool, Nancy P., et al. | | | |
| | 37 | 6,609,023 | 8/19/2003 | Fischell, David R., et al. | | | |
| | 38 | 6,631,072 | 10/7/2003 | Paul, George L., et al. | | | |
| | 39 | 6,683,256 | 1/27/2004 | Kao | | | |
| | 40 | 6,696,647 | 2/24/2004 | Ono et al. | | | |
| | 41 | 6,703,921 | 3/9/2004 | Wuidart, Luc et al. | | | |
| | 42 | 6,803,744 | 10/12/2004 | Sabo, Anthony | | | |
| | 43 | 6,858,970 | 2/22/2005 | Malkin, Matthew C., et al. | | | |
| | 44 | 6,961,619 | 11/1/2005 | Casey, Don E. | | | |
| | 45 | 6,967,462 | 11/22/2005 | Landis, Geoffrey A. | | | |
| | 46 | 6,988,026 | 1/17/2006 | Breed, David S., et al. | | | |
| | 47 | 7,027,311 | 4/11/2006 | Vanderelli, Timm A., et al. | | | |
| | 48 | 7,035,076 | 4/25/2006 | Stevenson, Robert A. | | | |
| | 49 | 7,084,605 | 8/1/2006 | Mickle et al. | | | |
| | 50 | 7,127,293 | 10/24/2006 | MacDonald, Stuart G. | | | |
| | 51 | 7,193,418 | 3/20/2007 | Freytag, Nicolas | | | |

| Examiner Signature | Date Considered |
|---|---|
| /Fritz Fleming/ (05/05/2014) | |

EXAMINER: Initials citation considered. Draw line through citation if not in conformance and not considered. Include copy of this form with next communication to applicant.

Substitute Disclosure Form

ALL REFERENCES CONSIDERED EXCEPT WHERE LINED THROUGH. /F.F./

| Substitute Disclosure Form | U.S. Department of Commerce Patent and Trademark Office | Attorney Docket No. 01997-0359009 | Application No. 12/639,963 |
|---|---|---|---|
| **Information Disclosure Statement by Applicant** (Use several sheets if necessary) | | First Named Inventor John D. Joannopoulos | |
| (37 CFR §1.98(b)) | | Filing Date December 16, 2009 | Group Art Unit 2836 |

**U.S. Patent Documents**

| Examiner Initial | Desig. ID | Document Number | Publication Date | Patentee | Class | Subclass | Filing Date If Appropriate |
|---|---|---|---|---|---|---|---|
| | 52 | 7,233,137 | 6/19/2007 | Nakamura, Junichi et al. | | | |
| | 53 | 7,251,527 | 7/31/2007 | Lyden, Michael J. | | | |
| | 54 | 7,288,918 | 10/30/2007 | DiStefano, Michael Vincent | | | |
| | 55 | 2002/0130642 | 9/19/2002 | Ettes, Wilhelmus G., et al. | | | |
| | 56 | 2002/0167294 | 11/14/2002 | Odaohhara, Shigefumi | | | |
| | 57 | 2003/0071034 | 4/17/2003 | Thompson, Leslie L., et al. | | | |
| | 58 | 2003/0160590 | 8/28/2003 | Schaefer et al. | | | |
| | 59 | 2004/0026998 | 2/12/2004 | Henriott, Jay M., et al. | | | |
| | 60 | 2004/0130425 | 7/8/2004 | Dayan, Tal et al. | | | |
| | 61 | 2004/0142733 | 7/22/2004 | Parise, Ronald J. | | | |
| | 62 | 2004/0189246 | 9/30/2004 | Bulai, Claudiu et al. | | | |
| | 63 | 2004/0227057 | 11/18/2004 | Tuominen, Juha et al. | | | |
| | 64 | 2005/0021134 | 1/27/2005 | Opie, John C. | | | |
| | 65 | 2005/0033382 | 2/10/2005 | Single, Peter | | | |
| | 66 | 2005/0104453 | 5/19/2005 | Vanderelli, Timm A., et al. | | | |
| | 67 | 2005/0116683 | 6/2/2005 | Cheng, Lily K., et al. | | | |
| | 68 | 2005/0140482 | 6/30/2005 | Cheng, Lily K., et al. | | | |
| | 69 | 2005/0189945 | 9/1/2005 | Reiderman, Arcady | | | |
| | 70 | 2005/0194926 | 9/8/2005 | Di Stefano, Michael Vincent | | | |
| | 71 | 2005/0253152 | 11/17/2005 | Klimov, Victor I., et al. | | | |
| | 72 | 2005/0288742 | 12/29/2005 | Giordano, James R., et al. | | | |
| | 73 | 2006/0001509 | 1/5/2006 | Gibbs, Phillip R. | | | |
| | 74 | 2006/0053296 | 3/9/2006 | Busboom, Axel et al. | | | |
| | 75 | 2006/0066443 | 3/30/2006 | Hall, David M. | | | |
| | 76 | 2006/0164866 | 7/27/2006 | Vanderelli, Timm A., et al. | | | |

| Examiner Signature | Date Considered |
|---|---|
| /Fritz Fleming/ (05/05/2014) | |

EXAMINER: Initials citation considered. Draw line through citation if not in conformance and not considered. Include copy of this form with next communication to applicant.

Substitute Disclosure Form

ALL REFERENCES CONSIDERED EXCEPT WHERE LINED THROUGH. /F.F./

| Substitute Disclosure Form | U.S. Department of Commerce Patent and Trademark Office | Attorney Docket No. 01997-0359009 | Application No. 12/639,963 |
|---|---|---|---|
| **Information Disclosure Statement by Applicant** (Use several sheets if necessary) | | First Named Inventor John D. Joannopoulos | |
| (37 CFR §1.98(b)) | | Filing Date December 16, 2009 | Group Art Unit 2836 |

**U.S. Patent Documents**

| Examiner Initial | Desig. ID | Document Number | Publication Date | Patentee | Class | Subclass | Filing Date If Appropriate |
|---|---|---|---|---|---|---|---|
| | 77 | 2006/0184209 | 8/17/2006 | John, Constance M., et al. | | | |
| | 78 | 2006/0184210 | 8/17/2006 | Singhal, Ruchika et al. | | | |
| | 79 | 2006/0199620 | 9/7/2006 | Greene, Charles E., et al. | | | |
| | 80 | 2006/0214626 | 9/28/2006 | Nilson, Lee A., et al. | | | |
| | 81 | 2006/0219448 | 10/5/2006 | Grieve, Malcolm J., et al. | | | |
| | 82 | 2006/0238365 | 10/26/2006 | Vecchione, Elio et al. | | | |
| | 83 | 2006/0281435 | 12/14/2006 | Shearer, John G., et al. | | | |
| | 84 | 2007/0010295 | 1/11/2007 | Greene, Charles E., et al. | | | |
| | 85 | 2007/0013483 | 1/18/2007 | Stewart, Robert | | | |
| | 86 | 2007/0016089 | 1/18/2007 | Fischell, David R., et al. | | | |
| | 87 | 2007/0024246 | 2/1/2007 | Flaugher, David J. | | | |
| | 88 | 2007/0069687 | 3/29/2007 | Suzuki, Katsuya | | | |
| | 89 | 2007/0096875 | 5/3/2007 | Waterhouse, Paul et al. | | | |
| | 90 | 2007/0105429 | 5/10/2007 | Kohl et al. | | | |
| | 91 | 2007/0117596 | 5/24/2007 | Greene, Charles E., et al. | | | |
| | 92 | 2007/0126650 | 6/7/2007 | Guenther | | | |
| | 93 | 2007/0176840 | 8/2/2007 | Pristas, James et al. | | | |
| | 94 | 2007/0208263 | 9/6/2007 | John, Michael S., et al. | | | |

**Foreign Patent Documents or Published Foreign Patent Applications**

| Examiner Initial | Desig. ID | Document Number | Publication Date | Country or Patent Office | Class | Subclass | Translation Yes | Translation No |
|---|---|---|---|---|---|---|---|---|
| | 95 | JP 4-265875 | 9/22/1992 | Japan | G01R | 33/035 | English Abstract Only | |
| | 96 | JP 9-298847 | 11/18/1997 | Japan | H02J | 7/10 | English Abstract Only | |
| | 97 | JP 10-164837 | 6/19/1998 | Japan | H02 M | 3/28 | English Abstract Only | |
| | 98 | JP 2001-309580 | 11/2/2001 | Japan | H02J | 17/00 | Machine Translation | |

| Examiner Signature /Fritz Fleming/ (05/05/2014) | Date Considered |
|---|---|

EXAMINER: Initials citation considered. Draw line through citation if not in conformance and not considered. Include copy of this form with next communication to applicant.

Substitute Disclosure Form

ALL REFERENCES CONSIDERED EXCEPT WHERE LINED THROUGH. /F.F./

| Substitute Disclosure Form | U.S. Department of Commerce Patent and Trademark Office | Attorney Docket No. 01997-0359009 | Application No. 12/639,963 |
|---|---|---|---|
| **Information Disclosure Statement by Applicant** (Use several sheets if necessary) | | First Named Inventor John D. Joannopoulos | |
| (37 CFR §1.98(b)) | | Filing Date December 16, 2009 | Group Art Unit 2836 |

**Foreign Patent Documents or Published Foreign Patent Applications**

| Examiner Initial | Desig. ID | Document Number | Publication Date | Country or Patent Office | Class | Subclass | Translation Yes | Translation No |
|---|---|---|---|---|---|---|---|---|
| | 99 | JP 2002-10535 | 1/11/2002 | Japan | H02J | 17/00 | Machine Translation | |
| | 100 | JP 2005-149238 | 6/9/2005 | Japan | G06K | 19/00 | Machine Translation | |
| | 101 | JP 2007-505480 | 3/8/2007 | Japan | H01F | 38/14 | Machine Translation | |
| | 102 | JP 2007-537637 | 12/20/2007 | Japan | H01Q | 7/08 | See US 2007/0126650 | |
| | 103 | WO 2007/020583 | 2/22/2007 | WIPO | | | | |
| | 104 | WO 2007/042952 | 4/19/2007 | WIPO | A61B | 5/117 | | |

**Other Documents (include Author, Title, Date, and Place of Publication)**

| Examiner Initial | Desig. ID | Document |
|---|---|---|
| | 105 | JACKSON, J. D. ,"Classical Electrodynamics",3rd Edition, Wiley, New York,1999,pp. 201-203 |
| | 106 | TANG, S.C et al.,"Evaluation of the Shielding Effects on Printed-Circuit-Board Transformers Using Ferrite Plates and Copper Sheets",IEEE Transactions on Power Electronics,vol.17, no.6,Nov 2002.,pp.1080-1088 |
| | 107 | VILLENEUVE, PIERRE R. et al.,"Microcavities in photonic crystals: Mode symmetry, tunability, and coupling efficiency",Physical Review B, Volume 54, Number 11 ,15 September 1996,pp. 7837-7842 |
| | 108 | Copy of Non-Final Office Action for U.S. Application Serial No. 12/649,635 by Examiner Fritz M. Fleming dated February 27, 2014 (18 pages) |
| | 109 | Copy of Non-Final Office Action for U.S. Application Serial No. 12/649,777 by Examiner Fritz M. Fleming dated February 26, 2014 (16 pages) |
| | 110 | Copy of Non-Final Office Action for U.S. Application Serial No. 12/649,813 by Examiner Fritz M. Fleming dated February 27, 2014 (16 pages) |
| | 111 | Copy of Non-Final Office Action for U.S. Application Serial No. 12/649,852 by Examiner Fritz M. Fleming dated February 27, 2014 (17 pages) |
| | 112 | Ahmadian et al., "Miniature Transmitter for Implantable Micro Systems", Proceedings of the 25th Annual International Conference of the IEEE EMBS Cancun, Mexico, pp. 3028-3031, September 17-21, 2003 |
| | 113 | Ziaie, Babak et al., "A Low-Power Miniature Transmitter Using A Low-Loss Silicon Platform For Biotelemetry", Proceedings - 19th International Conference IEEE/EMBS, pp. 2221-2224; October 30 - November 2, 1997 (4 pages) |

| Examiner Signature | Date Considered |
|---|---|
| /Fritz Fleming/ (05/05/2014) | |

EXAMINER: Initials citation considered. Draw line through citation if not in conformance and not considered. Include copy of this form with next communication to applicant.

Substitute Disclosure Form

ALL REFERENCES CONSIDERED EXCEPT WHERE LINED THROUGH. /F.F./

| Index of Claims | Application/Control No. | Applicant(s)/Patent Under Reexamination |
|---|---|---|
| | 12639963 | JOANNOPOULOS ET AL. |
| | **Examiner** | **Art Unit** |
| | FRITZ M FLEMING | 2836 |

| | | | | | | | |
|---|---|---|---|---|---|---|---|
| ✓ | Rejected | - | Cancelled | N | Non-Elected | A | Appeal |
| = | Allowed | ÷ | Restricted | I | Interference | O | Objected |

☐ Claims renumbered in the same order as presented by applicant ☐ CPA ☐ T.D. ☐ R.1.47

| CLAIM | | DATE | | | | | | | | |
|---|---|---|---|---|---|---|---|---|---|---|
| Final | Original | 09/23/2011 | 08/27/2012 | 06/12/2013 | 02/24/2014 | 05/05/2014 | | | | |
| 1 | 1 | ✓ | ✓ | ✓ | ✓ | = | | | | |
| 23 | 2 | ✓ | ✓ | ✓ | ✓ | = | | | | |
| 2 | 3 | | ✓ | ✓ | ✓ | = | | | | |
| 3 | 4 | | ✓ | ✓ | ✓ | = | | | | |
| 4 | 5 | | ✓ | ✓ | ✓ | = | | | | |
| 5 | 6 | | ✓ | ✓ | ✓ | = | | | | |
| 6 | 7 | | ✓ | ✓ | ✓ | = | | | | |
| 7 | 8 | | ✓ | ✓ | ✓ | = | | | | |
| 8 | 9 | | ✓ | ✓ | ✓ | = | | | | |
| 9 | 10 | | ✓ | ✓ | ✓ | = | | | | |
| - | 11 | | ✓ | ✓ | - | - | | | | |
| 10 | 12 | | ✓ | ✓ | ✓ | = | | | | |
| - | 13 | | ✓ | ✓ | ✓ | - | | | | |
| 11 | 14 | | ✓ | ✓ | ✓ | = | | | | |
| 12 | 15 | | ✓ | ✓ | ✓ | = | | | | |
| 13 | 16 | | ✓ | ✓ | ✓ | = | | | | |
| - | 17 | | ✓ | ✓ | O | - | | | | |
| 14 | 18 | | ✓ | ✓ | O | = | | | | |
| 15 | 19 | | ✓ | ✓ | O | = | | | | |
| 16 | 20 | | ✓ | ✓ | ✓ | = | | | | |
| 17 | 21 | | ✓ | ✓ | ✓ | = | | | | |
| 18 | 22 | | ✓ | ✓ | ✓ | = | | | | |
| 19 | 23 | | ✓ | ✓ | O | = | | | | |
| 20 | 24 | | ✓ | ✓ | O | = | | | | |
| 26 | 25 | | ✓ | ✓ | ✓ | = | | | | |
| 27 | 26 | | ✓ | ✓ | ✓ | = | | | | |
| 28 | 27 | | ✓ | ✓ | ✓ | = | | | | |
| 29 | 28 | | ✓ | ✓ | ✓ | = | | | | |
| 30 | 29 | | ✓ | ✓ | ✓ | = | | | | |
| 31 | 30 | | ✓ | ✓ | ✓ | = | | | | |
| 32 | 31 | | ✓ | ✓ | ✓ | = | | | | |
| 33 | 32 | | ✓ | ✓ | ✓ | = | | | | |
| - | 33 | | ✓ | ✓ | - | - | | | | |
| 34 | 34 | | ✓ | ✓ | ✓ | = | | | | |
| - | 35 | | ✓ | ✓ | ✓ | - | | | | |
| 35 | 36 | | ✓ | ✓ | ✓ | = | | | | |

| Index of Claims | Application/Control No. | Applicant(s)/Patent Under Reexamination |
|---|---|---|
| | 12639963 | JOANNOPOULOS ET AL. |
| | **Examiner** | **Art Unit** |
| | FRITZ M FLEMING | 2836 |

| | | | | | | | |
|---|---|---|---|---|---|---|---|
| ✓ | Rejected | - | Cancelled | N | Non-Elected | A | Appeal |
| = | Allowed | ÷ | Restricted | I | Interference | O | Objected |

☐ Claims renumbered in the same order as presented by applicant ☐ CPA ☐ T.D. ☐ R.1.47

| CLAIM | | DATE | | | | | | | | |
|---|---|---|---|---|---|---|---|---|---|---|
| Final | Original | 09/23/2011 | 08/27/2012 | 06/12/2013 | 02/24/2014 | 05/05/2014 | | | | |
| 36 | 37 | | ✓ | ✓ | ✓ | = | | | | |
| 37 | 38 | | ✓ | ✓ | ✓ | = | | | | |
| - | 39 | | ✓ | ✓ | O | - | | | | |
| 38 | 40 | | ✓ | ✓ | O | = | | | | |
| 39 | 41 | | ✓ | ✓ | O | = | | | | |
| 40 | 42 | | ✓ | ✓ | ✓ | = | | | | |
| 41 | 43 | | ✓ | ✓ | ✓ | = | | | | |
| 42 | 44 | | ✓ | ✓ | ✓ | = | | | | |
| 43 | 45 | | ✓ | ✓ | O | = | | | | |
| 25 | 46 | | ✓ | ✓ | O | = | | | | |
| 21 | 47 | | ✓ | ✓ | ✓ | = | | | | |
| 24 | 48 | | ✓ | ✓ | ✓ | = | | | | |
| 22 | 49 | | | ✓ | ✓ | = | | | | |
| 44 | 50 | | | ✓ | ✓ | = | | | | |

| Issue Classification | Application/Control No. | Applicant(s)/Patent Under Reexamination |
|---|---|---|
| | 12639963 | JOANNOPOULOS ET AL. |
| | **Examiner** | **Art Unit** |
| | FRITZ M FLEMING | 2836 |

| CPC | | | | | |
|---|---|---|---|---|---|
| **Symbol** | | | | **Type** | **Version** |
| Y02T | | 90 | / 122 | A | 2013-01-01 |
| Y02T | | 90 | / 14 | A | 2013-01-01 |
| H01Q | | 9 | / 04 | I | 2013-01-01 |
| H02J | | 17 | / 00 | F | 2013-01-01 |
| Y02T | | 10 | / 7005 | A | 2013-01-01 |
| B60L | | 11 | / 182 | I | 2013-01-01 |
| Y02T | | 10 | / 7088 | A | 2013-01-01 |
| H02J | | 5 | / 005 | I | 2013-01-01 |
| | | | / | | |
| | | | / | | |
| | | | / | | |
| | | | / | | |
| | | | / | | |
| | | | / | | |
| | | | / | | |

| CPC Combination Sets | | | | | | |
|---|---|---|---|---|---|---|
| **Symbol** | | | **Type** | **Set** | **Ranking** | **Version** |
| | | / | | | | |
| | | / | | | | |

| | | | |
|---|---|---|---|
| NONE<br><br>(Assistant Examiner) | (Date) | **Total Claims Allowed:**<br>44 | |
| /FRITZ M FLEMING/<br>Primary Examiner.Art Unit 2836<br><br>(Primary Examiner) | 05/05/2014<br><br>(Date) | O.G. Print Claim(s)<br>1 | O.G. Print Figure<br>8 |

U.S. Patent and Trademark Office

Part of Paper No. 20140505

| Issue Classification | Application/Control No. | Applicant(s)/Patent Under Reexamination |
|---|---|---|
| | 12639963 | JOANNOPOULOS ET AL. |
| | **Examiner** | **Art Unit** |
| | FRITZ M FLEMING | 2836 |

| US ORIGINAL CLASSIFICATION | | INTERNATIONAL CLASSIFICATION | |
|---|---|---|---|
| CLASS | SUBCLASS | CLAIMED | NON-CLAIMED |
| 307 | 104 | H 0 2 J 17 / 00 (2006.01.01) | |

| CROSS REFERENCE(S) | | | | | |
|---|---|---|---|---|---|
| CLASS | SUBCLASS (ONE SUBCLASS PER BLOCK) | | | | |
| | | | | | |

| NONE<br><br>(Assistant Examiner) | (Date) | Total Claims Allowed:<br>44 | |
|---|---|---|---|
| /FRITZ M FLEMING/<br>Primary Examiner.Art Unit 2836<br><br>(Primary Examiner) | 05/05/2014<br><br>(Date) | O.G. Print Claim(s)<br>1 | O.G. Print Figure<br>8 |

U.S. Patent and Trademark Office

Part of Paper No. 20140505

| Issue Classification | Application/Control No. | Applicant(s)/Patent Under Reexamination |
|---|---|---|
| | 12639963 | JOANNOPOULOS ET AL. |
| | **Examiner** | **Art Unit** |
| | FRITZ M FLEMING | 2836 |

☐ Claims renumbered in the same order as presented by applicant ☐ CPA ☒ T.D. ☐ R.1.47

| Final | Original | Final | Original | Final | Original | Final | Original | Final | Original | Final | Original | Final | Original | Final | Original |
|---|---|---|---|---|---|---|---|---|---|---|---|---|---|---|---|
| 1 | 1 | - | 17 | - | 33 | 22 | 49 | | | | | | | | |
| 23 | 2 | 14 | 18 | 34 | 34 | 44 | 50 | | | | | | | | |
| 2 | 3 | 15 | 19 | - | 35 | | | | | | | | | | |
| 3 | 4 | 16 | 20 | 35 | 36 | | | | | | | | | | |
| 4 | 5 | 17 | 21 | 36 | 37 | | | | | | | | | | |
| 5 | 6 | 18 | 22 | 37 | 38 | | | | | | | | | | |
| 6 | 7 | 19 | 23 | - | 39 | | | | | | | | | | |
| 7 | 8 | 20 | 24 | 38 | 40 | | | | | | | | | | |
| 8 | 9 | 26 | 25 | 39 | 41 | | | | | | | | | | |
| 9 | 10 | 27 | 26 | 40 | 42 | | | | | | | | | | |
| - | 11 | 28 | 27 | 41 | 43 | | | | | | | | | | |
| 10 | 12 | 29 | 28 | 42 | 44 | | | | | | | | | | |
| - | 13 | 30 | 29 | 43 | 45 | | | | | | | | | | |
| 11 | 14 | 31 | 30 | 25 | 46 | | | | | | | | | | |
| 12 | 15 | 32 | 31 | 21 | 47 | | | | | | | | | | |
| 13 | 16 | 33 | 32 | 24 | 48 | | | | | | | | | | |

| | | | |
|---|---|---|---|
| NONE<br>(Assistant Examiner) | (Date) | **Total Claims Allowed:**<br>44 | |
| /FRITZ M FLEMING/<br>Primary Examiner.Art Unit 2836<br>(Primary Examiner) | 05/05/2014<br>(Date) | O.G. Print Claim(s)<br>1 | O.G. Print Figure<br>8 |

U.S. Patent and Trademark Office

Part of Paper No. 20140505

**EAST Search History**

**EAST Search History (Prior Art)**

| Ref # | Hits | Search Query | DBs | Default Operator | Plurals | Time Stamp |
|---|---|---|---|---|---|---|
| S1 | 12528 | high adj q | USPAT | OR | OFF | 2012/03/20 16:45 |
| S2 | 296 | S1 same wireless | USPAT | OR | OFF | 2012/03/20 16:45 |
| S3 | 88674 | ("5876425" \| "20040130916" \| "6345203" \| "20050151511" \| "5455467" \| "6597076" \| "6307468" \| "6047214" \| "5517194" \| "20030014091" \| "7355150" \| "20030114769" \| "6442434" \| "20040130915" \| "6364735" \| "20030069051")".PN" | US-PGPUB; USPAT | OR | OFF | 2012/03/20 16:48 |
| S4 | 16 | ("5876425" \| "20040130916" \| "6345203" \| "20050151511" \| "5455467" \| "6597076" \| "6307468" \| "6047214" \| "5517194" \| "20030014091" \| "7355150" \| "20030114769" \| "6442434" \| "20040130915" \| "6364735" \| "20030069051").PN. | US-PGPUB; USPAT | OR | OFF | 2012/03/20 16:49 |
| S5 | 5 | S4 and q | US-PGPUB; USPAT | OR | OFF | 2012/03/20 16:57 |
| S6 | 2141 | (307/104).CCLS. | US-PGPUB; USPAT; USOCR | OR | OFF | 2012/03/20 16:59 |
| S7 | 39 | S6 and q | USPAT | OR | OFF | 2012/03/20 16:59 |
| S8 | 306 | S6 and q | US-PGPUB; USPAT | OR | OFF | 2012/03/20 16:59 |
| S9 | 362 | (320/108).CCLS. | USPAT; USOCR | OR | OFF | 2012/03/20 17:35 |
| S10 | 893 | (320/108).CCLS. | US-PGPUB; USPAT; USOCR | OR | OFF | 2012/03/20 17:36 |
| S11 | 129 | S10 and q | US-PGPUB; USPAT | OR | OFF | 2012/03/20 17:36 |
| S12 | 5432 | (high adj q) same resonator | US-PGPUB; USPAT; USOCR; FPRS; EPO; JPO; DERWENT; IBM_TDB | OR | ON | 2012/03/20 17:51 |
| S13 | 480 | (high adj q) same resonator same (contactless or (contact adj less) or inductive or inductively or wireless or wirelessly) | US-PGPUB; USPAT; USOCR; FPRS; EPO; JPO; | OR | ON | 2012/03/20 17:52 |

| | | | | | | |
|---|---|---|---|---|---|---|
| | | | DERWENT; IBM_TDB | | | |
| S14 | 402 | ("2133494" \| "20030062794" \| "20030199778" \| "20040130916" \| "20050127849" \| "20060185809" \| "20080197710" \| "20090033564" \| "20090072627" \| "20090224608" \| "6450946" \| "6960968" \| "7069064" \| "7116200" \| "7180248" \| "7385357" \| "20080067874" \| "20090085408" \| "20090085706" \| "20090251008" \| "0649621" \| "7514818" \| "8022576" \| "1119732" \| "20030214255" \| "20040201361" \| "20060022636" \| "20080211320" \| "20090127937" \| "20090153273" \| "4088999" \| "5027709" \| "5070293" \| "5999308" \| "6436299" \| "7239110" \| "7248017" \| "7474058" \| "7518267" \| "20050288740" \| "20090189458" \| "20090284082" \| "7191007" \| "20070145830" \| "20090267709" \| "20100123355" \| "20100207458" \| "20110074218" \| "20110193419" \| "20030038641" \| "20040000974" \| "20040267501" \| "20050093475" \| "20050156560" \| "20070178945" \| "20080014897" \| "20090195333" \| "20090224856" \| "20100038970" \| "5898579" \| "6597076" \| "6749119" \| "6798716" \| "6831417" \| "6917431" \| "7126450" \| "7375493" \| "0787412" \| "20090108997" \| "20090284227" \| "20090289595" \| "7795708" \| "20080266748" \| "20100133918" \| "20110043046" \| "20020105343" \| "20020118004" \| "20040232845" \| "20050116650" \| "20060270440" \| "20090058189" \| "20090212636" \| "20090213028" \| "20090273242" \| "5216402" \| "5437057" \| "6937130" \| "7042196" \| "7382636" \| "7525283" \| "20090096413" \| "20090230777" \| "20090281678" \| "20090284220" \| "5986895" \| "7147604" \| "7639514" \| "7843288" \| "7741734" \| "20100123353" \| "20040113847" \| "20040150934" \| "20050007067" \| "20050122059" \| "20070267918" \| "20080191638" \| "20090010028" \| "20090072628" \| "20090072629" \| "20090224609" \| "5493691" \| "5118997" \| "7599743" \| "7825543" \| "20090108679" \| "0645576" \| "20090284083" \| "20100102641" \| "20100133919" \| "20100187911" \| "20110089895" \| "20020032471" \| "20030062980" \| "20060132045" \| "20070276538" \| "20080278264" \| "20090045772" \| "20090079268" \| "20090102292" \| "20090134712" \| "20090179502" \| "20090243397" \| "5341083" \| "6452465" \| "6731071" \| "6806649" \| "7118240" \| "7212414" \| | US-PGPUB; USPAT; USOCR; FPRS; EPO; JPO; DERWENT; IBM_TDB | OR | ON | 2012/03/20 21:29 |

| | | | | | | |
|---|---|---|---|---|---|---|
| | | "7462951" \| "20080012569" \| "20080030415" \| "20090146892" \| "20090237194" \| "20090267558" \| "20090284245" \| "20090286476" \| "20100231163" \| "20100289449" \| "6664770" \| "20090267710" \| "20040130915" \| "20050122058" \| "20050127866" \| "20070064406" \| "20070171681" \| "20070222542" \| "20090015075" \| "20090051224" \| "20090195332" \| "20090243394" \| "3517350" \| "5528113" \| "6184651" \| "6515878" \| "6844702" \| "6856291" \| "6906495" \| "6975198" \| "7132918" \| "7375492" \| "7378817" \| "7492247" \| "7615936" \| "20070182367" \| "20080265684" \| "20090067198" \| "20090160261" \| "20090174263" \| "20090180679" \| "20090271047" \| "20090284369" \| "20090286470" \| "20070021140" \| "20100123354" \| "20110074347" \| "20040222751" \| "20050085873" \| "20050104064" \| "20050127850" \| "20060061323" \| "20060181242" \| "20060205381" \| "20090167449" \| "20090299918" \| "3535543" \| "5367242" \| "5550452" \| "6812645" \| "6825620" \| "6917163" \| "6973250" \| "7466213" \| "20050288739" \| "20090271048" \| "20090284218" \| "20090286475" \| "20100102640" \| "20100133920" \| "20100148589").PN. | | | | |
| S15 | 10488 | tet same q | US-PGPUB; USPAT; USOCR; FPRS; EPO; JPO; DERWENT; IBM_TDB | OR | ON | 2012/03/20 22:31 |
| S16 | 4 | tet same q same implant | US-PGPUB; USPAT; USOCR; FPRS; EPO; JPO; DERWENT; IBM_TDB | OR | ON | 2012/03/20 22:32 |
| S17 | 2 | trancutaneous adj energy adj transfer | US-PGPUB; USPAT; USOCR; FPRS; EPO; JPO; DERWENT; IBM_TDB | OR | ON | 2012/03/20 22:34 |
| S18 | 550 | transcutaneous adj energy adj transfer | US-PGPUB; USPAT; USOCR; FPRS; EPO; JPO; DERWENT; IBM_TDB | OR | ON | 2012/03/20 22:34 |
| S19 | 60 | S18 and q | US-PGPUB; | OR | ON | 2012/03/20 |

| | | | | | | |
|---|---|---|---|---|---|---|
| | | | USPAT; USOCR; FPRS; EPO; JPO; DERWENT; IBM_TDB | | | 22:34 |
| S20 | 1060 | ("near" adj field) same wireless same power | US-PGPUB; USPAT; USOCR; FPRS; EPO; JPO; DERWENT; IBM_TDB | OR | ON | 2012/03/20 22:49 |
| S21 | 76 | ("near" adj field) same wireless same power same q | US-PGPUB; USPAT; USOCR; FPRS; EPO; JPO; DERWENT; IBM_TDB | OR | ON | 2012/03/20 22:49 |
| S22 | 233 | ("near" adj field) same (wireless adj power) | US-PGPUB; USPAT; USOCR; FPRS; EPO; JPO; DERWENT; IBM_TDB | OR | ON | 2012/03/20 22:52 |
| S23 | 156 | ("near" adj field) adj inductive | US-PGPUB; USPAT; USOCR; FPRS; EPO; JPO; DERWENT; IBM_TDB | OR | ON | 2012/03/20 23:01 |
| S24 | 178 | ("near" adj field) same implant$ same power | US-PGPUB; USPAT; USOCR; FPRS; EPO; JPO; DERWENT; IBM_TDB | OR | ON | 2012/03/20 23:19 |
| S25 | 192 | ("near" adj field) same power same q | US-PGPUB; USPAT; USOCR; FPRS; EPO; JPO; DERWENT; IBM_TDB | OR | ON | 2012/03/20 23:40 |
| S26 | 2141 | (307/104).CCLS. | US-PGPUB; USPAT; USOCR | OR | OFF | 2012/03/20 23:54 |
| S27 | 893 | (320/108).CCLS. | US-PGPUB; USPAT; USOCR | OR | OFF | 2012/03/20 23:54 |
| S28 | 2316 | S26 or S27 | US-PGPUB; USPAT | OR | OFF | 2012/03/20 23:54 |
| S29 | 319 | S28 and "near" adj field | US-PGPUB; USPAT | OR | ON | 2012/03/20 23:54 |
| S30 | 31 | ("3167168" \| "4023753" \| "4331225" \| "4459438" \| "4603640" \| "4689530" \| | US-PGPUB; USPAT; | OR | OFF | 2012/03/21 00:10 |

| | | | | | | |
|---|---|---|---|---|---|---|
| | | "4800328" \| "4833337" \| "4836344" \| "4879522").PN. OR ("5519262").URPN. | USOCR | | | |
| S31 | 4 | ("near" adj field) same implant$ same q | US-PGPUB; USPAT; USOCR; FPRS; EPO; JPO; DERWENT; IBM_TDB | OR | ON | 2012/03/21 00:16 |
| S32 | 186 | ("near" adj field) same high adj q | US-PGPUB; USPAT; USOCR; FPRS; EPO; JPO; DERWENT; IBM_TDB | OR | ON | 2012/03/21 00:20 |
| S33 | 34 | ("2401572" \| "2426226" \| "2805414" \| "3546699" \| "3713162" \| "3771075" \| "3786376" \| "3810183" \| "3914715" \| "4150345" \| "4157516" \| "4163961" \| "4233580" \| "4253101" \| "4258365" \| "4288759" \| "4358746" \| "Re29296").PN. OR ("4516097").URPN. | US-PGPUB; USPAT; USOCR | OR | OFF | 2012/03/21 00:30 |
| S34 | 1 | ("20100102639").PN. | US-PGPUB; USPAT; USOCR | OR | OFF | 2012/03/21 11:50 |
| S35 | 1 | (("2010012355") or ("7741734")).PN. | US-PGPUB; USPAT; USOCR | OR | OFF | 2012/03/21 12:29 |
| S36 | 2 | (("20100012355") or ("7741734")).PN. | US-PGPUB; USPAT; USOCR | OR | OFF | 2012/03/21 12:29 |
| S37 | 2 | (("20100123355") or ("7741734")).PN. | US-PGPUB; USPAT; USOCR | OR | OFF | 2012/03/21 12:30 |
| S38 | 2 | (("20100096934") or ("7741734")).PN. | US-PGPUB; USPAT; USOCR | OR | OFF | 2012/03/21 12:52 |
| S39 | 2 | (("20100123355") or ("7741734")).PN. | US-PGPUB; USPAT; USOCR | OR | OFF | 2012/03/21 20:45 |
| S40 | 0 | S39 and (tunable) | US-PGPUB; USPAT | OR | OFF | 2012/03/21 20:45 |
| S41 | 0 | S39 and (tuning) | US-PGPUB; USPAT | OR | OFF | 2012/03/21 20:46 |
| S42 | 0 | S39 and (tune) | US-PGPUB; USPAT | OR | OFF | 2012/03/21 20:46 |
| S43 | 1 | ("20100127574").PN. | US-PGPUB; USPAT; USOCR | OR | OFF | 2012/03/26 06:11 |
| S44 | 1 | S43 and rate | US-PGPUB; USPAT | OR | OFF | 2012/03/26 06:13 |
| S45 | 1 | S43 and "0.2" | US-PGPUB; USPAT | OR | OFF | 2012/03/26 06:18 |
| S46 | 1 | S43 and (tunable or tuning or tuned or feedback) | US-PGPUB; USPAT | OR | ON | 2012/03/26 06:20 |

| | | | | | | |
|---|---|---|---|---|---|---|
| S47 | 1 | S43 and (tunable or tuning or tuned or feedback or detune or detuning) | US-PGPUB; USPAT | OR | ON | 2012/03/26 06:21 |
| S48 | 1 | ("20090085408").PN. | US-PGPUB; USPAT; USOCR | OR | OFF | 2012/03/26 06:57 |
| S49 | 1 | ("20110140544").PN. | US-PGPUB; USPAT; USOCR | OR | OFF | 2012/04/09 13:11 |
| S50 | 1 | S49 and common | US-PGPUB; USPAT | OR | OFF | 2012/04/09 13:11 |
| S51 | 3 | (("20110140544") or ("7825543") or ("7741734")).PN. | US-PGPUB; USPAT; USOCR | OR | OFF | 2012/04/09 13:14 |
| S52 | 3 | S51 and common | US-PGPUB; USPAT | OR | OFF | 2012/04/09 13:14 |
| S53 | 1 | S51 and (common adj inductance) | US-PGPUB; USPAT | OR | ON | 2012/04/09 13:15 |
| S54 | 4 | (("20110140544") or ("20100117456") or ("7825543") or ("7741734")).PN. | US-PGPUB; USPAT; USOCR | OR | OFF | 2012/04/09 13:19 |
| S55 | 1 | S52 and (common adj inductance) | US-PGPUB; USPAT | OR | ON | 2012/04/09 13:19 |
| S56 | 3 | S52 and common | US-PGPUB; USPAT | OR | OFF | 2012/04/09 13:20 |
| S57 | 4 | S54 and common | US-PGPUB; USPAT | OR | OFF | 2012/04/09 13:20 |
| S58 | 368 | (high adj q) same resonant same (tune or tuning) | USPAT | OR | OFF | 2012/04/09 13:54 |
| S59 | 587 | (high adj q) same resonant same (tune or tuning) | US-PGPUB; USPAT | OR | ON | 2012/04/09 13:54 |
| S60 | 1485 | (307/104).CCLS. | USPAT; USOCR | OR | OFF | 2012/05/07 04:48 |
| S61 | 3 | S60 and young and fleming | USPAT | OR | OFF | 2012/05/07 04:48 |
| S62 | 2 | (("7825543") or ("7741734")).PN. | USPAT; USOCR | OR | OFF | 2012/05/07 08:04 |
| S63 | 5 | "2006011769" | EPO; DERWENT | OR | OFF | 2012/05/07 08:16 |
| S64 | 4 | "2004072581" | EPO; DERWENT | OR | OFF | 2012/05/07 08:17 |
| S65 | 2179 | (307/104).CCLS. | US-PGPUB; USPAT; USOCR | OR | OFF | 2012/05/07 12:02 |
| S66 | 921 | (320/108).CCLS. | US-PGPUB; USPAT; USOCR | OR | OFF | 2012/05/07 12:02 |
| S67 | 1199 | S65 or S66 | USPAT | OR | OFF | 2012/05/07 12:02 |
| S68 | 2381 | S65 or S66 | US-PGPUB; USPAT | OR | OFF | 2012/05/07 12:02 |
| S69 | 100 | S68 and (nano or nanoscale) | US-PGPUB; USPAT | OR | ON | 2012/05/07 12:02 |
| S70 | 409 | capacitor same inductor same(nano or nanoscale) | US-PGPUB; USPAT | OR | ON | 2012/05/07 12:07 |
| S71 | 5 | capacitor same inductor same(nano or | US-PGPUB; | OR | ON | 2012/05/07 |

| | | | | | | |
|---|---|---|---|---|---|---|
| | | nanoscale) same transponder | USPAT | | | 12:13 |
| S72 | 365 | capacitor same inductor same powder | US-PGPUB; USPAT | OR | ON | 2012/05/07 12:19 |
| S73 | 87 | q same (inductor or inductance) same (air adj core) same frequency | US-PGPUB; USPAT | OR | ON | 2012/05/07 13:09 |
| S74 | 5 | q same (inductor or inductance) same (air adj core) same adjustable | US-PGPUB; USPAT | OR | ON | 2012/05/07 13:13 |
| S75 | 24 | (inductor or inductance) same (air adj core) same adjustable | US-PGPUB; USPAT | OR | ON | 2012/05/07 13:14 |
| S76 | 79 | (inductor or inductance) same (air adj core) same variable | US-PGPUB; USPAT | OR | ON | 2012/05/07 13:15 |
| S77 | 166 | S68 and (air adj core) | US-PGPUB; USPAT | OR | ON | 2012/05/07 13:24 |
| S78 | 21 | (inductor or inductance) same (air adj core) same variable | EPO; JPO; DERWENT | OR | ON | 2012/05/07 13:38 |
| S79 | 98 | S68 and (variable or adjustable) near2 (inductor or inductance) | US-PGPUB; USPAT | OR | ON | 2012/05/07 13:43 |
| S80 | 53 | ("20020082059" \| "20030006880" \| "20030090239" \| "3689885" \| "3938018" \| "3949268" \| "4800328" \| "4818855" \| "5229652" \| "5341280" \| "5428659" \| "5455466" \| "5455467" \| "5550452" \| "5600225" \| "5701657" \| "5734254" \| "5814900" \| "5831348" \| "5982764" \| "6057668" \| "6127799" \| "6252380" \| "6265791" \| "6301128" \| "6323775" \| "6424124" \| "6429622" \| "6462432" \| "6597076" \| "6683438" \| "6703920" \| "6821670" \| "6844702" \| "6977479").PN. OR ("7518267").URPN. | US-PGPUB; USPAT; USOCR | OR | OFF | 2012/05/07 13:51 |
| S81 | 1 | ("6436299").PN. | USPAT; USOCR | OR | OFF | 2012/05/07 13:59 |
| S82 | 2222 | (307/104).CCLS. | US-PGPUB; USPAT; USOCR | OR | OFF | 2012/06/18 05:48 |
| S83 | 962 | (320/108).CCLS. | US-PGPUB; USPAT; USOCR | OR | OFF | 2012/06/18 05:48 |
| S84 | 2222 | (307/104).CCLS. | US-PGPUB; USPAT; USOCR | OR | OFF | 2012/06/18 05:49 |
| S85 | 962 | (320/108).CCLS. | US-PGPUB; USPAT; USOCR | OR | OFF | 2012/06/18 05:49 |
| S86 | 2458 | S84 or S85 | US-PGPUB; USPAT | OR | OFF | 2012/06/18 05:49 |
| S87 | 511 | (high adj q) same resonator same (contactless or (contact adj less) or inductive or inductively or wireless or wirelessly) | US-PGPUB; USPAT; USOCR; FPRS; EPO; JPO; DERWENT; IBM_TDB | OR | ON | 2012/06/18 05:50 |
| S88 | 264 | ("near" adj field) same (wireless adj power) | US-PGPUB; USPAT; USOCR; FPRS; | OR | ON | 2012/06/18 05:50 |

| | | | | | | |
|---|---|---|---|---|---|---|
| | | | EPO; JPO; DERWENT; IBM_TDB | | | |
| S89 | 163 | ("near" adj field) adj inductive | US-PGPUB; USPAT; USOCR; FPRS; EPO; JPO; DERWENT; IBM_TDB | OR | ON | 2012/06/18 05:50 |
| S90 | 2458 | S84 or S85 | US-PGPUB; USPAT | OR | OFF | 2012/06/18 05:51 |
| S91 | 350 | S90 and "near" adj field | US-PGPUB; USPAT | OR | ON | 2012/06/18 05:51 |
| S92 | 11 | ("20040100338" \| "20040233043" \| "20060202665" \| "20120068549" \| "5053774" \| "5287112" \| "6772011" \| "8076800" \| "8076801" \| "8084889" \| "8097983").PN. | US-PGPUB; USPAT | OR | ON | 2012/06/18 07:40 |
| S93 | 4 | ("20030124050" \| "20030126948" \| "5455467" \| "6772011").PN. | US-PGPUB; USPAT | OR | ON | 2012/06/18 07:40 |
| S94 | 2 | (("7825543") or ("7741734")).PN. | USPAT; USOCR | OR | OFF | 2012/06/18 08:05 |
| S95 | 2 | S94 and characteristic | USPAT | OR | OFF | 2012/06/18 08:05 |
| S96 | 1 | ("20030210106").PN. | US-PGPUB; USPAT | OR | OFF | 2012/07/03 10:37 |
| S97 | 1 | ("5959433").PN. | US-PGPUB; USPAT | OR | OFF | 2012/07/03 10:39 |
| S98 | 447 | evanescent adj tail | US-PGPUB; USPAT; USOCR; FPRS; EPO; JPO; DERWENT; IBM_TDB | OR | OFF | 2012/07/03 10:40 |
| S99 | 50 | S98 and inductive | US-PGPUB; USPAT; USOCR; FPRS; EPO; JPO; DERWENT; IBM_TDB | OR | OFF | 2012/07/03 10:41 |
| S100 | 97 | S98 same power | US-PGPUB; USPAT; USOCR; FPRS; EPO; JPO; DERWENT; IBM_TDB | OR | OFF | 2012/07/03 10:42 |
| S101 | 50 | S98 same wireless$ | US-PGPUB; USPAT; USOCR; FPRS; EPO; JPO; DERWENT; IBM_TDB | OR | OFF | 2012/07/03 10:43 |
| S102 | 60 | S98 and wireless$ | US-PGPUB; USPAT; | OR | OFF | 2012/07/03 10:44 |

| | | | | | | |
|---|---|---|---|---|---|---|
| | | | USOCR; FPRS; EPO; JPO; DERWENT; IBM_TDB | | | |
| S103 | 37316 | computer same (wireless$ or inductive$) same power | US-PGPUB; USPAT; USOCR; FPRS; EPO; JPO; DERWENT; IBM_TDB | OR | ON | 2012/07/03 11:05 |
| S104 | 4230 | computer same (wireless$ or inductive$) same power same (coupling or transfer) | US-PGPUB; USPAT; USOCR; FPRS; EPO; JPO; DERWENT; IBM_TDB | OR | ON | 2012/07/03 11:05 |
| S105 | 56 | ("2967267" \| "3549990" \| "4038625" \| "4654573" \| "4697183" \| "4755783" \| "4914561" \| "4924171" \| "4996638" \| "5122729" \| "5157319" \| "5166965").PN. OR ("5455467").URPN. | US-PGPUB; USPAT; USOCR | OR | OFF | 2012/07/03 11:06 |
| S106 | 1358 | computer same (wireless$ or inductive$) same power same (charging) | US-PGPUB; USPAT; USOCR; FPRS; EPO; JPO; DERWENT; IBM_TDB | OR | ON | 2012/07/03 11:09 |
| S107 | 2 | ("2005/0151511").URPN. | USPAT | OR | OFF | 2012/07/03 11:19 |
| S108 | 971 | (320/108).CCLS. | US-PGPUB; USPAT; USOCR | OR | OFF | 2012/07/03 11:20 |
| S109 | 130 | S108 and computer | USPAT | OR | OFF | 2012/07/03 11:20 |
| S110 | 364 | S108 and computer | US-PGPUB; USPAT | OR | OFF | 2012/07/03 11:21 |
| S111 | 1 | ("20100277005").PN. | US-PGPUB; USPAT; USOCR | OR | OFF | 2012/07/03 11:28 |
| S112 | 2 | (("20100277005") or ("20110049996")).PN. | US-PGPUB; USPAT; USOCR | OR | OFF | 2012/07/03 11:29 |
| S113 | 0 | S112 and base | USPAT | OR | OFF | 2012/07/03 11:30 |
| S114 | 0 | S112 and hold | USPAT | OR | OFF | 2012/07/03 11:30 |
| S115 | 0 | S112 and portable | USPAT | OR | OFF | 2012/07/03 11:31 |
| S116 | 2 | S112 and portable | US-PGPUB; USPAT | OR | OFF | 2012/07/03 11:31 |
| S117 | 2 | S112 and base | US-PGPUB; USPAT | OR | OFF | 2012/07/03 11:31 |
| S118 | 135 | S108 and contacts | USPAT | OR | OFF | 2012/07/03 |

| | | | | | | |
|---|---|---|---|---|---|---|
| | | | | | | 11:44 |
| S119 | 1 | ("5367242").PN. | USPAT; USOCR | OR | OFF | 2012/07/03 12:01 |
| S120 | 0 | S119 and phone | USPAT | OR | OFF | 2012/07/03 12:01 |
| S121 | 244 | S108 and ferrite | US-PGPUB; USPAT | OR | OFF | 2012/07/03 12:19 |
| S122 | 1 | S112 and desktop | US-PGPUB; USPAT | OR | OFF | 2012/07/03 13:38 |
| S123 | 2 | S112 and "near" | US-PGPUB; USPAT | OR | OFF | 2012/07/03 13:48 |
| S124 | 2 | S112 and evanescent | US-PGPUB; USPAT | OR | OFF | 2012/07/03 14:44 |
| S125 | 2 | S112 and radiative | US-PGPUB; USPAT | OR | OFF | 2012/07/03 14:46 |
| S126 | 2 | (("7825543") or ("7741734")).PN. | USPAT; USOCR | OR | OFF | 2012/07/03 14:50 |
| S127 | 1 | ("20100207458").PN. | US-PGPUB; USPAT; USOCR | OR | OFF | 2012/08/13 02:46 |
| S128 | 1 | S127 and characteristic | US-PGPUB; USPAT | OR | OFF | 2012/08/13 02:46 |
| S129 | 1 | ("20100127575").PN. | US-PGPUB; USPAT | OR | OFF | 2012/08/27 06:11 |
| S130 | 1 | S129 and second and third | US-PGPUB; USPAT | OR | OFF | 2012/08/27 06:14 |
| S131 | 0 | ("7687939").PN. | USPAT; USOCR | OR | OFF | 2012/08/27 06:15 |
| S132 | 0 | ("7687939").PN. | US-PGPUB; USPAT | OR | OFF | 2012/08/27 06:16 |
| S133 | 0 | ("7687939").PN. | US-PGPUB; USPAT | OR | OFF | 2012/08/27 06:16 |
| S134 | 1 | ("7741734").PN. | US-PGPUB; USPAT | OR | OFF | 2012/08/27 06:21 |
| S135 | 0 | S134 and second and third | USPAT | OR | OFF | 2012/08/27 06:22 |
| S136 | 1 | ("20110074347").PN. | US-PGPUB; USPAT; USOCR | OR | OFF | 2012/08/27 12:22 |
| S137 | 3 | (("20110074347") or ("7825543") or ("7741734")).PN. | US-PGPUB; USPAT; USOCR | OR | OFF | 2012/08/27 12:23 |
| S138 | 1 | ("20100237708").PN. | US-PGPUB; USPAT; USOCR | OR | OFF | 2012/08/29 08:48 |
| S139 | 1 | S138 and housing | US-PGPUB; USPAT | OR | OFF | 2012/08/29 08:49 |
| S140 | 1 | S138 and housing | US-PGPUB; USPAT | OR | ON | 2012/08/29 09:17 |
| S141 | 2 | (("20101117456") or ("20080278264") or ("7825543")).PN. | US-PGPUB; USPAT; USOCR | OR | OFF | 2012/09/04 11:41 |
| S142 | 3 | (("20100117456") or ("20080278264") or ("7825543")).PN. | US-PGPUB; USPAT; USOCR | OR | OFF | 2012/09/04 11:42 |

| | | | | | | |
|---|---|---|---|---|---|---|
| S143 | 3 | S142 and impedance | US-PGPUB; USPAT | OR | ON | 2012/09/04 11:44 |
| S144 | 0 | S142 and (impedance same (match or matching)) | US-PGPUB; USPAT | OR | ON | 2012/09/04 11:45 |
| S145 | 3 | (("20100127573") or ("7741734") or ("7825543")).PN. | US-PGPUB; USPAT; USOCR | OR | OFF | 2012/09/10 10:27 |
| S146 | 3 | S145 and characteristic | US-PGPUB; USPAT | OR | OFF | 2012/09/10 10:28 |
| S147 | 1706 | (307/104).CCLS. | US-PGPUB; USPAT | OR | OFF | 2012/09/10 12:09 |
| S148 | 1095 | (333/195).CCLS. | US-PGPUB; USPAT | OR | OFF | 2012/09/10 12:09 |
| S149 | 1017 | (320/108).CCLS. | US-PGPUB; USPAT | OR | OFF | 2012/09/10 12:09 |
| S155 | 1 | ("20100096934").PN. | US-PGPUB; USPAT | OR | OFF | 2012/09/10 13:29 |
| S157 | 1 | ("20100102641").PN. | US-PGPUB; USPAT; USOCR | OR | OFF | 2012/09/10 14:44 |
| S159 | 1 | ("20110169339").PN. | US-PGPUB; USPAT; USOCR | OR | OFF | 2012/09/11 07:05 |
| S160 | 0 | S159 and (voltage same capacitor) | USPAT | OR | OFF | 2012/09/11 07:08 |
| S161 | 1 | S159 and (voltage same capacitor) | US-PGPUB; USPAT | OR | ON | 2012/09/11 07:08 |
| S162 | 1 | S159 and (information same exchange) | US-PGPUB; USPAT | OR | ON | 2012/09/11 07:09 |
| S163 | 1 | S159 and planar | US-PGPUB; USPAT | OR | ON | 2012/09/11 07:18 |
| S164 | 25 | (high adj q) same feedback same (wireless$ or (non adj contact) or contactless) | US-PGPUB; USPAT; USOCR; FPRS; EPO; JPO; DERWENT; IBM_TDB | OR | ON | 2012/09/11 08:16 |
| S165 | 1110 | q same feedback same (wireless$ or (non adj contact) or contactless or inductive$) | US-PGPUB; USPAT; USOCR; FPRS; EPO; JPO; DERWENT; IBM_TDB | OR | ON | 2012/09/11 08:18 |
| S166 | 78 | q same feedback same (wireless$ or (non adj contact) or contactless or inductive$) same power same transfer | US-PGPUB; USPAT; USOCR; FPRS; EPO; JPO; DERWENT; IBM_TDB | OR | ON | 2012/09/11 08:18 |
| S167 | 1019 | (320/108).CCLS. | US-PGPUB; USPAT; EPO; JPO; DERWENT | OR | OFF | 2012/09/11 08:21 |
| S168 | 1794 | (307/104).CCLS. | US-PGPUB; | OR | OFF | 2012/09/11 |

| | | | | | | |
|---|---|---|---|---|---|---|
| | | | USPAT; EPO; JPO; DERWENT | | | 08:21 |
| S169 | 0 | ("032or33").PN. | US-PGPUB; USPAT; EPO; JPO; DERWENT | OR | OFF | 2012/09/11 08:22 |
| S170 | 2717 | S167 or S168 | US-PGPUB; USPAT; USOCR; FPRS; EPO; JPO; DERWENT; IBM_TDB | OR | OFF | 2012/09/11 08:22 |
| S171 | 485 | S170 and feedback | US-PGPUB; USPAT; USOCR; FPRS; EPO; JPO; DERWENT; IBM_TDB | OR | OFF | 2012/09/11 08:22 |
| S172 | 507 | S170 and (secondary same current same voltage) | US-PGPUB; USPAT; USOCR; FPRS; EPO; JPO; DERWENT; IBM_TDB | OR | OFF | 2012/09/11 09:33 |
| S173 | 128 | S170 and (secondary same current same voltage same resonant) | US-PGPUB; USPAT; USOCR; FPRS; EPO; JPO; DERWENT; IBM_TDB | OR | OFF | 2012/09/11 09:33 |
| S174 | 145 | (implant$) and (secondary same current same voltage same resonant) | US-PGPUB; USPAT; USOCR; FPRS; EPO; JPO; DERWENT; IBM_TDB | OR | OFF | 2012/09/11 10:29 |
| S175 | 9 | tet same (secondary same current same voltage same resonant) | US-PGPUB; USPAT; USOCR; FPRS; EPO; JPO; DERWENT; IBM_TDB | OR | OFF | 2012/09/11 10:39 |
| S176 | 45 | tet and (secondary same current same voltage same resonant) | US-PGPUB; USPAT; USOCR; FPRS; EPO; JPO; DERWENT; IBM_TDB | OR | OFF | 2012/09/11 10:40 |
| S177 | 54 | tet and (secondary same power same resonant) | US-PGPUB; USPAT; USOCR; FPRS; EPO; JPO; | OR | OFF | 2012/09/11 10:40 |

| | | | | | | |
|---|---|---|---|---|---|---|
| | | | DERWENT; IBM_TDB | | | |
| S178 | 316 | tet and (power same feedback) | US-PGPUB; USPAT; USOCR; FPRS; EPO; JPO; DERWENT; IBM_TDB | OR | OFF | 2012/09/11 10:45 |
| S179 | 126 | high same q same wireless same power same transfer | US-PGPUB; USPAT; USOCR; FPRS; EPO; JPO; DERWENT; IBM_TDB | OR | ON | 2012/09/11 11:12 |
| S180 | 1790 | (307/104).CCLS. | US-PGPUB; USPAT; EPO; JPO; DERWENT | OR | OFF | 2012/09/21 20:55 |
| S181 | 1013 | (320/108).CCLS. | US-PGPUB; USPAT; EPO; JPO; DERWENT | OR | OFF | 2012/09/21 20:56 |
| S183 | 0 | 20016655u1 | EPO; DERWENT | OR | OFF | 2012/09/30 18:52 |
| S184 | 9 | "20016655" | EPO; DERWENT | OR | OFF | 2012/09/30 18:52 |
| S185 | 3 | "10221484" | EPO; DERWENT | OR | OFF | 2012/09/30 18:53 |
| S186 | 0 | ("200902677710").PN. | US-PGPUB; USPAT; USOCR | OR | OFF | 2012/09/30 19:05 |
| S187 | 1 | ("20090267710").PN. | US-PGPUB; USPAT; USOCR | OR | OFF | 2012/09/30 19:05 |
| S188 | 0 | S187 and radiative | USPAT | OR | OFF | 2012/09/30 19:05 |
| S189 | 0 | S187 and nonradiative | USPAT | OR | OFF | 2012/09/30 19:05 |
| S190 | 0 | S187 and nonradiative | US-PGPUB | OR | OFF | 2012/09/30 19:05 |
| S191 | 1 | S187 and radiative | US-PGPUB; USPAT | OR | OFF | 2012/09/30 19:06 |
| S192 | 2 | (("7825543") or ("7741734")).PN. | USPAT; USOCR | OR | OFF | 2012/10/01 07:01 |
| S193 | 1020 | (320/108).CCLS. | US-PGPUB; USPAT | OR | OFF | 2012/10/01 07:16 |
| S194 | 746 | (320/109).CCLS. | US-PGPUB; USPAT | OR | OFF | 2012/10/01 07:16 |
| S195 | 67 | S193 and S194 | US-PGPUB; USPAT | OR | OFF | 2012/10/01 07:16 |
| S196 | 1 | ("20110018361").PN. | US-PGPUB; USPAT; USOCR | OR | OFF | 2012/10/01 08:01 |
| S197 | 1 | S196 and motorized | US-PGPUB; USPAT | OR | OFF | 2012/10/01 08:01 |

| | | | | | | |
|---|---|---|---|---|---|---|
| S198 | 1 | S196 and movement | US-PGPUB; USPAT | OR | OFF | 2012/10/01 08:02 |
| S199 | 1 | S196 and position | US-PGPUB; USPAT | OR | OFF | 2012/10/01 08:04 |
| S200 | 1 | ("20100327660").PN. | US-PGPUB; USPAT; USOCR | OR | OFF | 2012/10/01 09:41 |
| S201 | 1 | S200 and optimize | US-PGPUB; USPAT | OR | OFF | 2012/10/01 09:41 |
| S202 | 1 | S200 and optimizing | US-PGPUB; USPAT | OR | OFF | 2012/10/01 09:43 |
| S203 | 1 | S200 and optimiz$ | US-PGPUB; USPAT | OR | OFF | 2012/10/01 09:44 |
| S204 | 1 | ("20110074218").PN. | US-PGPUB; USPAT; USOCR | OR | OFF | 2012/10/01 17:14 |
| S205 | 3 | (("20100123354") or ("20100123353") or ("20090267710")).PN. | US-PGPUB; USPAT; USOCR | OR | OFF | 2012/11/23 11:14 |
| S206 | 3 | S205 and resonator | US-PGPUB; USPAT | OR | OFF | 2012/11/23 11:19 |
| S207 | 60 | "7741734" | US-PGPUB; USPAT | OR | OFF | 2012/11/23 12:01 |
| S208 | 1 | ("7741734").PN. | USPAT; USOCR | OR | OFF | 2012/11/23 12:01 |
| S209 | 1 | ("7741734").PN. | USPAT; USOCR | OR | OFF | 2012/11/26 19:58 |
| S210 | 0 | S209 and storing | USPAT | OR | OFF | 2012/11/26 19:58 |
| S211 | 0 | S209 and store | USPAT | OR | OFF | 2012/11/26 19:58 |
| S212 | 0 | S209 and store | USPAT | OR | ON | 2012/11/26 20:05 |
| S213 | 1 | S209 and energy | USPAT | OR | ON | 2012/11/26 20:05 |
| S214 | 1 | S209 and stored | USPAT | OR | ON | 2012/11/26 20:07 |
| S215 | 1 | S209 and intrinsic | USPAT | OR | ON | 2012/11/26 20:12 |
| S216 | 2 | (("6960968") or ("7069064")).PN. | USPAT; USOCR | OR | OFF | 2012/12/10 15:46 |
| S217 | 1802 | (307/104).CCLS. | US-PGPUB; USPAT | OR | OFF | 2012/12/10 22:53 |
| S219 | 4 | (("20110140544") or ("20100117456") or ("7825543") or ("7741734")).PN. | US-PGPUB; USPAT; USOCR | OR | OFF | 2012/12/17 08:16 |
| S220 | 4 | S219 and acoustic | US-PGPUB; USPAT | OR | OFF | 2012/12/17 08:16 |
| S221 | 233 | acoustic near3 power near3 transmission | US-PGPUB; USPAT | OR | ON | 2012/12/17 08:17 |
| S222 | 34 | S221 and resonant | US-PGPUB; USPAT | OR | ON | 2012/12/17 08:17 |
| S223 | 774 | (self adj (resonant or resonating)) near5 (coil or loop) | US-PGPUB; USPAT; USOCR; | OR | ON | 2013/01/24 09:19 |

| | | | | | | |
|---|---|---|---|---|---|---|
| | | | FPRS; EPO; JPO; DERWENT; IBM_TDB | | | |
| S224 | 593 | (self adj (resonant or resonating)) near2 (coil or loop) | US-PGPUB; USPAT; USOCR; FPRS; EPO; JPO; DERWENT; IBM_TDB | OR | ON | 2013/01/24 09:20 |
| S225 | 303 | (self adj (resonant or resonating)) adj (coil or loop) | US-PGPUB; USPAT; USOCR; FPRS; EPO; JPO; DERWENT; IBM_TDB | OR | ON | 2013/01/24 09:20 |
| S226 | 123 | ("3859624" \| "4450431" \| "4630044" \| "4658263" \| "4868915").PN. OR ("5084699").URPN. | US-PGPUB; USPAT; USOCR | OR | OFF | 2013/01/24 09:29 |
| S227 | 23 | S223 same ("near" adj field) | US-PGPUB; USPAT; USOCR; FPRS; EPO; JPO; DERWENT; IBM_TDB | OR | ON | 2013/01/24 09:38 |
| S228 | 1 | ("5012236").PN. | USPAT; USOCR | OR | OFF | 2013/01/24 09:40 |
| S229 | 900 | self near2 (resonant or resonate or resonance or resonating) near2 (coil or loop) | US-PGPUB; USPAT; USOCR; FPRS; EPO; JPO; DERWENT; IBM_TDB | OR | ON | 2013/01/24 12:09 |
| S230 | 2524 | (307/104).CCLS. | US-PGPUB; USPAT; USOCR | OR | OFF | 2013/01/24 12:19 |
| S231 | 209 | S230 and (self near2 (resonant or resonate or resonance or resonating)) | US-PGPUB; USPAT; USOCR | OR | ON | 2013/01/24 12:19 |
| S232 | 782 | S229 or S231 | US-PGPUB; USPAT; USOCR | OR | ON | 2013/01/24 12:20 |
| S233 | 209 | S230 and (self near2 (resonant or resonate or resonance or resonating)) | US-PGPUB; USPAT; USOCR; FPRS; EPO; JPO; DERWENT; IBM_TDB | OR | ON | 2013/01/24 12:20 |
| S234 | 957 | S233 or S229 | US-PGPUB; USPAT; USOCR; FPRS; EPO; JPO; DERWENT; IBM_TDB | OR | ON | 2013/01/24 12:20 |

| | | | | | | |
|---|---|---|---|---|---|---|
| S235 | 17 | self same resonant same coil same transponder | US-PGPUB; USPAT; USOCR; FPRS; EPO; JPO; DERWENT; IBM_TDB | OR | ON | 2013/02/07 10:50 |
| S236 | 1 | ("20100231053").PN. | US-PGPUB; USPAT; USOCR | OR | OFF | 2013/02/21 08:45 |
| S237 | 2993 | contactless same (energy or power) | EPO; JPO; DERWENT | OR | OFF | 2013/02/28 01:50 |
| S238 | 137 | contactless same (energy or power) same (resonant or resonance or resonating) | EPO; JPO; DERWENT | OR | ON | 2013/02/28 01:50 |
| S239 | 934 | wireless same (energy or power) same (resonant or resonance or resonating) | EPO; JPO; DERWENT | OR | ON | 2013/02/28 02:15 |
| S240 | 233 | wireless same (energy or power) same (resonant or resonance or resonating) same coil | EPO; JPO; DERWENT | OR | ON | 2013/02/28 02:15 |
| S241 | 118 | wireless same (energy or power) same q | EPO; JPO; DERWENT | OR | ON | 2013/02/28 02:23 |
| S242 | 29 | wireless same (energy or power) same (resonant or resonance or resonating) same q | EPO; JPO; DERWENT | OR | ON | 2013/02/28 02:29 |
| S243 | 0 | (h02j5/0005).IPCR. | US-PGPUB; USPAT; EPO; JPO; DERWENT | OR | OFF | 2013/02/28 08:48 |
| S244 | 975 | h02j5/005.cpc. | US-PGPUB; USPAT; EPO; JPO; DERWENT | OR | OFF | 2013/02/28 08:52 |
| S245 | 0 | h02j5/005.cpc. | EPO; JPO; DERWENT | OR | OFF | 2013/02/28 08:55 |
| S246 | 0 | h02j5/005 | EPO; JPO; DERWENT | OR | OFF | 2013/02/28 08:55 |
| S247 | 0 | h02j5/005.cpc. | EPO; JPO; DERWENT | OR | OFF | 2013/02/28 09:03 |
| S248 | 0 | h02j5.cpcl. | EPO; JPO; DERWENT | OR | OFF | 2013/02/28 09:06 |
| S249 | 0 | h02j.cpcl. | EPO; JPO; DERWENT | OR | OFF | 2013/02/28 09:07 |
| S250 | 9041 | h02j17/00 | EPO; JPO; DERWENT | OR | OFF | 2013/02/28 09:18 |
| S251 | 0 | h02j17/00 | EPO | OR | OFF | 2013/02/28 09:21 |
| S252 | 7452 | h02j17/00 | DERWENT | OR | OFF | 2013/02/28 09:21 |
| S253 | 9041 | h02j17/00 | JPO; DERWENT | OR | OFF | 2013/02/28 09:21 |
| S254 | 1589 | h02j17/00 | JPO | OR | OFF | 2013/02/28 09:21 |
| S255 | 0 | h02j17/00.ipc. | EPO | OR | OFF | 2013/02/28 09:26 |

| | | | | | | |
|---|---|---|---|---|---|---|
| S256 | 0 | h02j17/00.ipc. | DERWENT | OR | OFF | 2013/02/28 09:26 |
| S257 | 0 | h02j17/00.epc. | EPO | OR | OFF | 2013/02/28 09:27 |
| S258 | 0 | H02J17/00.epc. | EPO | OR | OFF | 2013/02/28 09:27 |
| S259 | 0 | H02J17/00.ipc. | EPO | OR | OFF | 2013/02/28 09:27 |
| S260 | 1589 | H02J17/00.ipc. | JPO | OR | OFF | 2013/02/28 09:28 |
| S261 | 1095 | S252 and q | DERWENT | OR | OFF | 2013/02/28 09:28 |
| S262 | 25 | S252 and (high adj q) | DERWENT | OR | OFF | 2013/02/28 09:30 |
| S263 | 1 | schuerman and (high adj q) | USPAT | OR | OFF | 2013/02/28 09:32 |
| S264 | 1 | ("5053774").PN. | USPAT | OR | OFF | 2013/02/28 09:32 |
| S265 | 8 | schuerman and q | USPAT | OR | OFF | 2013/02/28 09:36 |
| S266 | 1 | ("5374930").PN. | USPAT; USOCR | OR | OFF | 2013/02/28 09:39 |
| S267 | 97 | ("5287112").PN. OR ("5374930").URPN. | US-PGPUB; USPAT; USOCR | OR | OFF | 2013/02/28 09:39 |
| S268 | 230 | S252 and (resonator) | DERWENT | OR | OFF | 2013/02/28 09:45 |
| S269 | 242 | S252 and (resonator) | DERWENT | OR | ON | 2013/02/28 09:46 |
| S270 | 554 | S252 and (resonant) | DERWENT | OR | ON | 2013/02/28 09:51 |
| S271 | 61 | transponder and (resonance or resonant or resonating) and q | JPO; DERWENT; IBM_TDB | OR | ON | 2013/02/28 10:34 |
| S272 | 1 | ("5095224").PN. | USPAT; USOCR | OR | OFF | 2013/02/28 10:44 |
| S273 | 43 | ("3166718" \| "3360732" \| "3391345" \| "4345604" \| "4489370" \| "4584499" \| "4654574" \| "4675796" \| "4694387" \| "4743789" \| "4829415").PN. OR ("5095224").URPN. | US-PGPUB; USPAT; USOCR | OR | OFF | 2013/02/28 10:44 |
| S274 | 1069 | S252 and resonance | DERWENT | OR | OFF | 2013/02/28 10:47 |
| S275 | 44 | S274 and quality | DERWENT | OR | OFF | 2013/02/28 10:47 |
| S276 | 541 | S252 and resonance and coil | DERWENT | OR | OFF | 2013/02/28 10:48 |
| S277 | 557 | S252 and resonance and coil | DERWENT | OR | ON | 2013/02/28 10:48 |
| S278 | 71 | (high adj q) and coil and resonance | DERWENT | OR | ON | 2013/02/28 10:59 |
| S279 | 453 | (high adj q) same coil same resonance | US-PGPUB; USPAT | OR | ON | 2013/02/28 11:03 |
| S280 | 33 | (high adj q) same transponder same power | US-PGPUB; USPAT | OR | ON | 2013/02/28 11:22 |

| | | | | | | |
|---|---|---|---|---|---|---|
| S281 | 34 | (high adj q) same wireless$ same power | EPO; JPO; DERWENT | OR | ON | 2013/02/28 11:45 |
| S282 | 786 | (resonance or resonator or resonating) same wireless$ same power | EPO; JPO; DERWENT | OR | ON | 2013/02/28 11:46 |
| S283 | 521 | (resonance or resonator or resonating) same inductive$ same power | EPO; JPO; DERWENT | OR | ON | 2013/02/28 11:53 |
| S284 | 41 | S252 and meter | EPO; JPO; DERWENT | OR | ON | 2013/02/28 12:04 |
| S285 | 108 | "10" and power and distance and resonant | EPO; JPO; DERWENT | OR | ON | 2013/02/28 14:47 |
| S286 | 7452 | h02j17/00 | DERWENT | OR | OFF | 2013/02/28 14:51 |
| S287 | 77 | S286 and power and distance and resonant | EPO; JPO; DERWENT | OR | ON | 2013/02/28 14:51 |
| S288 | 477 | magnetic and resonant and power and (transfer or transmission or coupling) | EPO; JPO; DERWENT | OR | ON | 2013/02/28 14:52 |
| S289 | 39 | S286 and repeater | EPO; JPO; DERWENT | OR | ON | 2013/02/28 15:02 |
| S290 | 2569 | (307/104).CCLS. | US-PGPUB; USPAT; USOCR | OR | OFF | 2013/02/28 15:04 |
| S291 | 145 | S290 and repeater | US-PGPUB; USPAT | OR | ON | 2013/02/28 15:04 |
| S292 | 67 | implant same repeater | US-PGPUB; USPAT | OR | ON | 2013/02/28 15:07 |
| S293 | 9 | "near field" and q and loop | EPO; JPO; DERWENT | OR | ON | 2013/03/01 10:26 |
| S294 | 193 | "near field" and loop | EPO; JPO; DERWENT | OR | ON | 2013/03/01 10:27 |
| S295 | 201 | "near field" and power and transmission | EPO; JPO; DERWENT | OR | ON | 2013/03/01 10:31 |
| S296 | 1374 | "near field" same power same transmission | US-PGPUB; USPAT | OR | ON | 2013/03/01 10:33 |
| S297 | 130 | "near field" same power same transmission same q | US-PGPUB; USPAT | OR | ON | 2013/03/01 10:33 |
| S298 | 160 | "near field" same power same transmission same resonance | US-PGPUB; USPAT | OR | ON | 2013/03/01 10:35 |
| S299 | 256 | "near field" same (wireless or contactless or inductive) same resonance | US-PGPUB; USPAT | OR | ON | 2013/03/01 10:36 |
| S300 | 101 | ("3036295" \| "3137847" \| "3182314" \| "3182315" \| "3218638" \| "3299424" \| "3363246" \| "3467962" \| "3518546" \| "3522602" \| "3737911" \| "3739279").PN. OR ("4160971").URPN. | US-PGPUB; USPAT; USOCR | OR | OFF | 2013/03/01 10:39 |
| S301 | 228 | "wireless power transfer" | EPO; JPO; DERWENT | OR | OFF | 2013/03/01 10:42 |
| S302 | 807 | "wireless power transfer" | US-PGPUB; USPAT | OR | OFF | 2013/03/01 10:46 |
| S303 | 110 | "contactless power transfer" | US-PGPUB; USPAT | OR | OFF | 2013/03/01 10:51 |

| | | | | | | |
|---|---|---|---|---|---|---|
| S304 | 3053 | ((contactless or wireless$ or inductive$) adj power) | EPO; JPO; DERWENT | OR | ON | 2013/03/01 10:57 |
| S305 | 7642 | ((contactless or wireless or inductive or inductively) adj3 power) | EPO; JPO; DERWENT | OR | ON | 2013/03/01 10:58 |
| S306 | 3011 | ((contactless or wireless or inductive or inductively) adj power) | EPO; JPO; DERWENT | OR | ON | 2013/03/01 10:58 |
| S307 | 56 | ((contactless or wireless or inductive or inductively) adj3 power) same q | EPO; JPO; DERWENT | OR | ON | 2013/03/01 10:58 |
| S308 | 115 | ((contactless or wireless or inductive or inductively) adj3 power) and ("near" adj field) | EPO; JPO; DERWENT | OR | ON | 2013/03/01 11:00 |
| S309 | 522 | ((contactless or wireless or inductive or inductively) adj3 power) same ("near" adj field) | US-PGPUB; USPAT | OR | ON | 2013/03/01 11:01 |
| S310 | 392 | (self adj resonance) same q | US-PGPUB; USPAT | OR | ON | 2013/03/01 11:04 |
| S311 | 2569 | (307/104).CCLS. | US-PGPUB; USPAT; USOCR | OR | OFF | 2013/03/01 11:10 |
| S312 | 48 | S311 and quality | USPAT | OR | OFF | 2013/03/01 11:10 |
| S313 | 331 | S311 and quality | US-PGPUB; USPAT | OR | OFF | 2013/03/01 11:10 |
| S314 | 264 | S311 and (q adj factor) | US-PGPUB; USPAT | OR | OFF | 2013/03/01 11:11 |
| S315 | 303 | (self adj (resonance or resonating)) and (q adj factor) | US-PGPUB; USPAT | OR | OFF | 2013/03/01 11:12 |
| S316 | 102 | (loop adj antenna) same q same resonance | US-PGPUB; USPAT | OR | ON | 2013/03/01 11:15 |
| S317 | 1 | ("7741734").PN. | USPAT; USOCR | OR | OFF | 2013/03/01 11:26 |
| S318 | 0 | S317 and yates | USPAT | OR | OFF | 2013/03/01 11:26 |
| S319 | 1 | S317 and optimal | USPAT | OR | OFF | 2013/03/01 11:26 |
| S320 | 1 | S317 and markoff | USPAT | OR | OFF | 2013/03/01 11:26 |
| S321 | 1 | ("7741734").PN. | USPAT; USOCR | OR | OFF | 2013/03/01 23:46 |
| S322 | 4 | "3824972" | EPO; DERWENT | OR | OFF | 2013/03/02 00:54 |
| S323 | 235 | magnetic adj antenna | EPO; JPO; DERWENT | OR | OFF | 2013/03/02 01:48 |
| S324 | 252 | magnetic adj antenna | EPO; JPO; DERWENT | OR | ON | 2013/03/02 01:48 |
| S325 | 680 | magnetic adj antenna | US-PGPUB; USPAT | OR | ON | 2013/03/02 02:05 |
| S326 | 28 | S325 same q | US-PGPUB; USPAT | OR | ON | 2013/03/02 02:06 |
| S327 | 290 | S325 and "near field" | US-PGPUB; USPAT | OR | ON | 2013/03/02 02:08 |
| S328 | 10 | ("20040046663" \| "20050086264" \| "20050178832" \| "6236315" \| "6259369" \| "6839035" \| "7005968").PN. OR | US-PGPUB; USPAT; USOCR | OR | OFF | 2013/03/02 02:17 |

| | | | | | | |
|---|---|---|---|---|---|---|
| | | ("7280045").URPN. | | | | |
| S329 | 133 | (quality adj factor) same (loss adj rate) | US-PGPUB; USPAT; USOCR | OR | ON | 2013/03/02 02:51 |
| S330 | 70 | (quality adj factor) same (loop adj antenna) | US-PGPUB; USPAT; USOCR | OR | ON | 2013/03/02 02:52 |
| S331 | 11 | (quality adj factor) and (loop adj antenna) | EPO; JPO; DERWENT | OR | ON | 2013/03/02 02:59 |
| S332 | 321 | (quality adj factor) and (resonant adj frequency) | EPO; JPO; DERWENT | OR | ON | 2013/03/02 03:08 |
| S333 | 265 | (quality adj factor) same (resonant adj frequency) | EPO; JPO; DERWENT | OR | ON | 2013/03/02 03:08 |
| S334 | 1587 | (quality adj factor) same (resonant adj frequency) | USPAT | OR | ON | 2013/03/02 03:12 |
| S335 | 1 | ("20100207458").PN. | US-PGPUB; USPAT | OR | OFF | 2013/06/02 08:29 |
| S336 | 0 | S335 and dynamically | USPAT | OR | OFF | 2013/06/02 08:34 |
| S337 | 0 | S335 and dynamic$ | USPAT | OR | OFF | 2013/06/02 08:55 |
| S338 | 0 | S335 and intrinsic | USPAT | OR | OFF | 2013/06/02 09:09 |
| S339 | 0 | S335 and dynamically | US-PGPUB; USPAT | OR | OFF | 2013/06/02 09:11 |
| S340 | 1 | S335 and intrinsic | US-PGPUB; USPAT | OR | OFF | 2013/06/02 09:11 |
| S341 | 0 | S335 and " high intrinsic" | US-PGPUB; USPAT | OR | OFF | 2013/06/02 09:13 |
| S342 | 1 | S335 and high | US-PGPUB; USPAT | OR | OFF | 2013/06/02 09:13 |
| S343 | 1 | S335 and rate | US-PGPUB; USPAT | OR | OFF | 2013/06/02 09:16 |
| S344 | 1 | ("20110089895").PN. | US-PGPUB; USPAT; USOCR | OR | OFF | 2013/06/03 01:10 |
| S345 | 1 | S344 and repeater | US-PGPUB; USPAT | OR | OFF | 2013/06/03 01:10 |
| S346 | 1 | S344 and enhances | US-PGPUB; USPAT | OR | OFF | 2013/06/03 01:12 |
| S347 | 1 | S344 and "coupling mode region" | US-PGPUB; USPAT | OR | OFF | 2013/06/03 01:13 |
| S348 | 0 | qualcom and "coupling mode region" | US-PGPUB; USPAT | OR | OFF | 2013/06/03 01:14 |
| S349 | 0 | qualcom and (wireless same repeater same "near" same field) | US-PGPUB; USPAT | OR | OFF | 2013/06/03 01:15 |
| S350 | 16 | qualcom and (wireless same repeater) | US-PGPUB; USPAT | OR | OFF | 2013/06/03 01:15 |
| S351 | 6 | nigel and (wireless same repeater) | US-PGPUB; USPAT | OR | OFF | 2013/06/03 01:16 |
| S352 | 1 | ("20090284218").PN. | US-PGPUB; USPAT; USOCR | OR | OFF | 2013/06/03 01:20 |
| S353 | 1 | ("20090286470").PN. | US-PGPUB; | OR | OFF | 2013/06/03 |

| | | | | | | |
|---|---|---|---|---|---|---|
| | | | USPAT; USOCR | | | 01:23 |
| S354 | 2 | (("20100207458") or ("20110089895")).PN. | US-PGPUB; USPAT | OR | OFF | 2013/06/03 15:30 |
| S355 | 2 | (("20090224856") or ("20110089895")).PN. | US-PGPUB; USPAT | OR | OFF | 2013/06/03 15:32 |
| S356 | 1 | ("20090286470").PN. | US-PGPUB; USPAT; USOCR | OR | OFF | 2013/06/03 15:39 |
| S357 | 1 | S356 and (resonant or resonator) | US-PGPUB; USPAT | OR | ON | 2013/06/03 15:39 |
| S358 | 0 | S356 and q | US-PGPUB; USPAT | OR | ON | 2013/06/03 15:57 |
| S359 | 66 | ("2274557" \| "3694803" \| "3723966" \| "3798642" \| "3806905" \| "3911434" \| "3990041" \| "4067235" \| "4074227" \| "4174515" \| "4303910").PN. OR ("4450431").URPN. | US-PGPUB; USPAT; USOCR | OR | OFF | 2013/06/03 17:03 |
| S360 | 11 | ("20040046663" \| "20050086264" \| "20050178832" \| "6236315" \| "6259369" \| "6839035" \| "7005968").PN. OR ("7280045").URPN. | US-PGPUB; USPAT; USOCR | OR | OFF | 2013/06/03 17:20 |
| S361 | 36228 | (rfid or (rf adj2 id)) smae passive same repeater | EPO; JPO; DERWENT | OR | ON | 2013/06/03 17:26 |
| S362 | 6 | (rfid or (rf adj2 id)) same passive same repeater | EPO; JPO; DERWENT | OR | ON | 2013/06/03 17:26 |
| S363 | 11 | (rfid or (rf adj2 id)) near2 passive near2 repeater | US-PGPUB; USPAT | OR | ON | 2013/06/03 19:50 |
| S364 | 73 | (rfid or (rf adj2 id)) near2 repeater | US-PGPUB; USPAT | OR | ON | 2013/06/03 19:51 |
| S365 | 3 | (("8097983") or ("7825543") or ("7741734")).PN. | USPAT; USOCR | OR | OFF | 2013/06/03 20:13 |
| S366 | 3 | (("8097983") or ("7825543") or ("7741734") or ("201100898985")).PN. | US-PGPUB; USPAT | OR | OFF | 2013/06/03 20:15 |
| S367 | 0 | S366 and repeater | US-PGPUB; USPAT | OR | ON | 2013/06/03 20:16 |
| S368 | 4 | (("8097983") or ("7825543") or ("7741734") or ("20110089895")).PN. | US-PGPUB; USPAT | OR | OFF | 2013/06/03 20:17 |
| S369 | 1 | S368 and repeater | US-PGPUB; USPAT | OR | OFF | 2013/06/03 20:17 |
| S370 | 0 | tranponder same resonator | EPO; JPO; DERWENT | OR | OFF | 2013/06/05 09:37 |
| S371 | 64 | transponder same resonator | EPO; JPO; DERWENT | OR | ON | 2013/06/05 09:37 |
| S372 | 103 | transponder near5 resonator | US-PGPUB; USPAT | OR | ON | 2013/06/05 09:45 |
| S373 | 36 | transponder same resonator same q | US-PGPUB; USPAT; USOCR; FPRS; EPO; JPO; DERWENT; IBM_TDB | OR | ON | 2013/06/05 09:50 |
| S374 | 36 | transponder same resonator same q | US-PGPUB; | OR | ON | 2013/06/05 |

| | | | | | | |
|---|---|---|---|---|---|---|
| | | and resonator | USPAT; USOCR; FPRS; EPO; JPO; DERWENT; IBM_TDB | | | 09:56 |
| S375 | 7 | ("20030161511" \| "20030200814" \| "20070176773" \| "5443987" \| "5663072" \| "6025725" \| "6204764").PN. OR ("7714593").URPN. | US-PGPUB; USPAT; USOCR | OR | OFF | 2013/06/05 09:58 |
| S376 | 32 | rfid same resonator same q | US-PGPUB; USPAT; USOCR; FPRS; EPO; JPO; DERWENT; IBM_TDB | OR | ON | 2013/06/05 09:59 |
| S377 | 7 | rfid and resonator and q | EPO; JPO; DERWENT | OR | ON | 2013/06/05 10:01 |
| S378 | 112 | tire and pressure and resonator | EPO; JPO; DERWENT | OR | ON | 2013/06/05 10:02 |
| S379 | 1 | ("4450431").PN. | USPAT; USOCR | OR | OFF | 2013/06/05 17:13 |
| S380 | 0 | S379 and resonator | USPAT | OR | OFF | 2013/06/05 17:13 |
| S381 | 1 | S379 and resonant | USPAT | OR | OFF | 2013/06/05 17:13 |
| S382 | 4 | (("8097983") or ("7825543") or ("7741734") or ("20110089895")).PN. | US-PGPUB; USPAT | OR | OFF | 2013/06/11 08:29 |
| S383 | 4 | S382 and enhanc$ | US-PGPUB; USPAT | OR | OFF | 2013/06/11 08:29 |
| S384 | 1 | S382 and "loop inductor" | US-PGPUB; USPAT | OR | OFF | 2013/06/11 09:05 |
| S385 | 2 | hochstein and tire and pressure and "267,261" | US-PGPUB; USPAT | OR | OFF | 2013/06/11 10:28 |
| S386 | 6 | ("3662335" \| "3806905" \| "3858174" \| "4006449" \| "4074227" \| "4174515").PN. | US-PGPUB; USPAT; USOCR | OR | OFF | 2013/06/11 10:43 |
| S387 | 2 | ("2274557").PN. | USPAT; USOCR | OR | OFF | 2013/06/11 10:49 |
| S388 | 3 | (("2274557") or ("3723966")).PN. | USPAT; USOCR | OR | OFF | 2013/06/11 10:49 |
| S389 | 4 | (tire adj pressure) same resonant same repeat$ | US-PGPUB; USPAT; USOCR; FPRS; EPO; JPO; DERWENT; IBM_TDB | OR | OFF | 2013/06/11 13:44 |
| S390 | 39 | (tire adj pressure) same resonant same passive | US-PGPUB; USPAT; USOCR; FPRS; EPO; JPO; DERWENT; IBM_TDB | OR | OFF | 2013/06/11 13:52 |
| S391 | 2 | contactless same resonant same | US-PGPUB; | OR | ON | 2013/06/11 |

| | | | | | | |
|---|---|---|---|---|---|---|
| | | repeater | USPAT; USOCR; FPRS; EPO; JPO; DERWENT; IBM_TDB | | | 13:54 |
| S392 | 87 | wireless$ same resonant same repeater | US-PGPUB; USPAT; USOCR; FPRS; EPO; JPO; DERWENT; IBM_TDB | OR | ON | 2013/06/11 13:54 |
| S393 | 1 | wireless$ same resonant same extender | US-PGPUB; USPAT; USOCR; FPRS; EPO; JPO; DERWENT; IBM_TDB | OR | ON | 2013/06/11 13:56 |
| S394 | 2 | rfid same resonant same extender | US-PGPUB; USPAT; USOCR; FPRS; EPO; JPO; DERWENT; IBM_TDB | OR | ON | 2013/06/11 13:56 |
| S395 | 5 | rfid same resonant same repeater | US-PGPUB; USPAT; USOCR; FPRS; EPO; JPO; DERWENT; IBM_TDB | OR | ON | 2013/06/11 13:57 |
| S396 | 1 | rfid and resonant and repeater | FPRS; EPO; JPO; DERWENT; IBM_TDB | OR | ON | 2013/06/11 13:58 |
| S397 | 0 | rfid and resonant and extender | FPRS; EPO; JPO; DERWENT; IBM_TDB | OR | ON | 2013/06/11 13:58 |
| S398 | 6 | rfid and extender | FPRS; EPO; JPO; DERWENT; IBM_TDB | OR | ON | 2013/06/11 13:58 |
| S399 | 73 | rfid and booster | FPRS; EPO; JPO; DERWENT; IBM_TDB | OR | ON | 2013/06/11 14:01 |
| S400 | 14 | rfid and booster and range | FPRS; EPO; JPO; DERWENT; IBM_TDB | OR | ON | 2013/06/11 14:01 |
| S401 | 176 | rfid and passive and range | FPRS; EPO; JPO; DERWENT; IBM_TDB | OR | ON | 2013/06/11 14:02 |
| S402 | 1150 | rfid same range same (boost$ or (extend or extender or extending)) | US-PGPUB; USPAT; | OR | ON | 2013/06/11 14:28 |

| | | | | | | |
|---|---|---|---|---|---|---|
| | | | USOCR; FPRS; EPO; JPO; DERWENT; IBM_TDB | | | |
| S403 | 814 | rfid same range same (extend or extender or extending) | US-PGPUB; USPAT; USOCR; FPRS; EPO; JPO; DERWENT; IBM_TDB | OR | ON | 2013/06/11 14:29 |
| S404 | 172 | rfid same range same (extend or extender or extending) same passive$ | US-PGPUB; USPAT; USOCR; FPRS; EPO; JPO; DERWENT; IBM_TDB | OR | ON | 2013/06/11 14:29 |
| S405 | 7 | ("5379455" \| "5600333" \| "6107910" \| "6137403" \| "6223990" \| "6278413" \| "6359444").PN. | US-PGPUB; USPAT; USOCR | OR | OFF | 2013/06/11 14:34 |
| S406 | 284 | rfid same range same improved same antenna | US-PGPUB; USPAT; USOCR; FPRS; EPO; JPO; DERWENT; IBM_TDB | OR | ON | 2013/06/11 14:37 |
| S407 | 1 | ("8097983").PN. | USPAT; USOCR | OR | OFF | 2013/06/12 00:16 |
| S408 | 1 | ("5053774").PN. | USPAT; USOCR | OR | OFF | 2013/06/12 00:40 |
| S409 | 97 | rfid same resonant same detun$ | US-PGPUB; USPAT; USOCR; FPRS; EPO; JPO; DERWENT; IBM_TDB | OR | OFF | 2013/06/12 01:44 |
| S410 | 97 | rfid same resonant same detun$ | US-PGPUB; USPAT; USOCR; FPRS; EPO; JPO; DERWENT; IBM_TDB | OR | ON | 2013/06/12 01:44 |
| S411 | 76 | resonator same resonant same frequency same q same l same c | USPAT | OR | OFF | 2013/06/12 16:27 |
| S412 | 148 | resonator same resonant same frequency same q same l same c | US-PGPUB | OR | OFF | 2013/06/12 16:31 |
| S413 | 0 | rfid same resonant same frequency same q same l same c | US-PGPUB | OR | OFF | 2013/06/12 16:33 |
| S414 | 12 | transponder same resonant same frequency same q same l same c | US-PGPUB; USPAT; USOCR; FPRS; EPO; JPO; DERWENT; IBM_TDB | OR | ON | 2013/06/12 17:19 |

| | | | | | | |
|---|---|---|---|---|---|---|
| S415 | 112 | transponder same resonant same frequency same q | US-PGPUB; USPAT; USOCR; FPRS; EPO; JPO; DERWENT; IBM_TDB | OR | ON | 2013/06/12 17:44 |
| S416 | 4206 | l same c same resonant same frequency same q | US-PGPUB; USPAT; USOCR; FPRS; EPO; JPO; DERWENT; IBM_TDB | OR | ON | 2013/06/12 17:52 |
| S417 | 19 | l same c same resonant same frequency same q | FPRS; EPO; JPO; DERWENT; IBM_TDB | OR | ON | 2013/06/12 17:52 |
| S418 | 1 | charger same resonant same frequency same q | FPRS; EPO; JPO; DERWENT; IBM_TDB | OR | ON | 2013/06/12 17:54 |
| S419 | 47 | charger same resonant same frequency same q | US-PGPUB; USPAT | OR | ON | 2013/06/12 17:55 |
| S420 | 429 | (resonant adj circuit) near5 resonator | USPAT | OR | ON | 2013/06/12 18:58 |
| S421 | 51 | (resonant adj circuit) near5 resonator same q | USPAT | OR | ON | 2013/06/12 18:58 |
| S422 | 74 | ("3440633" \| "4429314" \| "4712070" \| "5084699").PN. OR ("5373303").URPN. | US-PGPUB; USPAT; USOCR | OR | OFF | 2013/06/12 19:03 |
| S423 | 56 | (resonant adj circuit) near5 resonator same LC | USPAT | OR | ON | 2013/06/12 19:06 |
| S424 | 2101 | (307/104).CCLS. | US-PGPUB; USPAT | OR | OFF | 2013/06/12 19:08 |
| S425 | 1298 | (320/108).CCLS. | US-PGPUB; USPAT | OR | OFF | 2013/06/12 19:08 |
| S426 | 1432 | S424 or S425 | USPAT | OR | OFF | 2013/06/12 19:09 |
| S427 | 62 | S426 and resonator | USPAT | OR | OFF | 2013/06/12 19:09 |
| S428 | 1 | ("20100127575").PN. | US-PGPUB; USPAT; USOCR | OR | OFF | 2013/06/12 23:35 |
| S429 | 1 | S428 and resonator | US-PGPUB; USPAT | OR | ON | 2013/06/12 23:35 |
| S430 | 35 | mouse and pad and (cordless or noncontact$ or contactless$ or inductive$) and power | EPO; JPO; DERWENT | OR | ON | 2013/09/30 13:26 |
| S431 | 19 | mouse same pad same (cordless or noncontact$ or contactless$ or inductive$) same power | EPO; JPO; DERWENT | OR | ON | 2013/09/30 13:46 |
| S432 | 72 | mouse same pad same (cordless or noncontact$ or contactless$ or inductive$) same power | US-PGPUB; USPAT | OR | ON | 2013/09/30 13:48 |
| S433 | 20 | ("20070090790" \| "7518267" \| "20070090790" \| "20100109445" \| | US-PGPUB; USPAT | OR | ON | 2013/09/30 14:18 |

| | | | | | | |
|---|---|---|---|---|---|---|
| | | "20080278112" \| "7741734" \| "20100041332" \| "7826873" \| "8013568" \| "20090284083" \| "20100045114" \| "7825543" \| "20080278264" \| "20100289449" \| "20080278264" \| "8339096" \| "20050134213" \| "8040103" \| "20100148589" \| "6008622" \| "20090237029" \| "20100127660").PN. | | | | |
| S434 | 8 | q same (resonant or resonance or resonator) same charging same ("near" adj field) | US-PGPUB; USPAT | OR | ON | 2013/09/30 14:24 |
| S435 | 5 | q and (resonant or resonance or resonator) and charging and ("near" adj field) | EPO; JPO; DERWENT | OR | ON | 2013/09/30 14:26 |
| S436 | 45 | q and (resonant or resonance or resonator) and ("near" adj field) | EPO; JPO; DERWENT | OR | ON | 2013/09/30 14:27 |
| S437 | 503 | q same (resonant or resonance or resonator) same ("near" adj field) | US-PGPUB; USPAT | OR | ON | 2013/09/30 14:28 |
| S438 | 296 | q same (resonant or resonance or resonator) same ("near" adj field) same power | US-PGPUB; USPAT | OR | ON | 2013/09/30 14:29 |
| S439 | 854 | (q same (resonant or resonance or resonator) same power) and ("near" adj field) | US-PGPUB; USPAT | OR | ON | 2013/09/30 14:32 |
| S440 | 120 | q and (resonant or resonance or resonator) and transmitter and power | EPO; JPO; DERWENT | OR | ON | 2013/09/30 15:07 |
| S441 | 23 | q same (resonant or resonance or resonator) same transmitter same power | EPO; JPO; DERWENT | OR | ON | 2013/09/30 15:13 |
| S442 | 418 | q same (resonant or resonance or resonator) same transmitter same power | US-PGPUB; USPAT | OR | ON | 2013/09/30 15:13 |
| S443 | 184 | (US-20030114769-$ or US-20110281528-$ or US-20090153273-$ or US-20050206479-$ or US-20050174197-$ or US-20040037363-$ or US-20090010028-$ or US-20080197710-$ or US-20070276538-$ or US-20070267918-$ or US-20070145830-$ or US-20050288740-$ or US-20050085873-$ or US-20020105343-$ or US-20020032471-$ or US-20050288741-$ or US-20040233043-$ or US-20040032363-$ or US-20040030260-$ or US-20030130708-$ or US-20070142872-$ or US-20060025830-$ or US-20040199212-$ or US-20020097770-$ or US-20090051224-$ or US-20030135971-$).did. or (US-20030124050-$ or US-20030126948-$ or US-20040263307-$ or US-20050007067-$ or US-20030210106-$ or US-20050151511-$ or US-20040189246-$ or US-20020089305-$ or US-20110285214-$ or US-20110101790-$ or US-20100066176-$ or US-20100036773-$ or US-20100007307-$ or US-20090174263- | US-PGPUB; USPAT; EPO; JPO; DERWENT | OR | OFF | 2013/09/30 15:22 |

| | | | | | | |
|---|---|---|---|---|---|---|
| | | $ or US-20060071632-$ or US-20100289449-$ or US-20080001572-$ or US-20060012371-$ or US-20050258966-$ or US-20040000974-$ or US-20040134985-$ or US-20080218314-$ or US-20070241762-$ or US-20030137446-$ or US-20020130778-$ or US-20050237198-$ or US-20050104790-$).did. or (US-20050275629-$ or US-20040196262-$ or US-20040145567-$ or US-20100127660-$ or US-20040130425-$).did. or (US-6047214-$ or US-6307468-$ or US-6483202-$ or US-7994880-$ or US-4654573-$ or US-5367242-$ or US-6430069-$ or US-6906495-$ or US-7521890-$ or US-7599743-$ or US-6009350-$ or US-5630835-$ or US-7622891-$ or US-5519262-$ or US-6561975-$ or US-4516097-$ or US-5455467-$ or US-7825543-$ or US-7741734-$ or US-6307440-$ or US-6217604-$ or US-5057809-$ or US-6170026-$ or US-7084605-$ or US-6844702-$ or US-6184651-$).did. or (US-5923544-$ or US-4082097-$ or US-7495414-$ or US-5654621-$ or US-5702431-$ or US-5498948-$ or US-5703461-$ or US-5084699-$ or US-4450431-$ or US-4630044-$ or US-5317330-$ or US-5703573-$ or US-8310108-$ or US-6424820-$ or US-4471343-$ or US-5374930-$ or US-5053774-$ or US-5250944-$ or US-5099227-$ or US-4560445-$ or US-5541604-$ or US-5420579-$ or US-5287112-$ or US-6489745-$ or US-4656472-$ or US-7541930-$ or US-7280045-$).did. or (US-6839035-$ or US-4588978-$ or US-2274557-$ or US-5373303-$ or US-5550536-$ or US-5864323-$ or US-5033295-$ or US-7075435-$ or US-6563425-$ or US-6650227-$ or US-7826873-$ or US-7518267-$ or US-6008622-$ or US-3949388-$ or US-6211799-$ or US-4059801-$).did. or (EP-1538558-$ or WO-2004015885-$ or EP-1434160-$ or EP-558316-$ or DE-3824972-$ or EP-549832-$ or DE-3941509-$ or EP-849700-$).did. or (JP-2002075736-$ or JP-2005026741-$ or JP-2004206383-$ or JP-2004206245-$ or JP-11075329-$ or JP-2008125127-$ or JP-02162222-$).did. or (JP-11144962-$ or JP-02097005-$ or DE-20016655-$ or DE-10221484-$ or EP-1408456-$ or EP-945829-$ or US-7147604-$ or KR-2004072581-$ or US-20040127248-$ or EP-1071038-$ or EP-1071039-$ or JP-2000270501-$ or JP-11305848-$ or DE-19651719-$ or US-5374930-$ or US-5287112-$ or | | | | |

| | | | | | | |
|---|---|---|---|---|---|---|
| | | US-4802080-$ or DE-10152863-$ or DE-10152858-$ or EP-473957-$ or JP-11075329-$ or JP-08126230-$ or US-20050063488-$ or US-5697076-$ or DD-225565-$ or US-20070145830-$).did. or (WO-2007034421-$ or WO-9811505-$ or WO-9811504-$ or US-4275377-$ or US-4180795-$ or FR-2896898-$ or SG-112842-$ or WO-2005055121-$ or WO-0215112-$ or US-20060061324-$ or US-20050275629-$ or US-20040189246-$ or US-20030103039-$ or JP-2001159948-$ or JP-10260781-$).did. | | | | |
| S444 | 52841 | S443 and q or ("near" adj field) | US-PGPUB; USPAT; EPO; JPO; DERWENT | OR | ON | 2013/09/30 15:23 |
| S445 | 90 | S443 and (q or ("near" adj field)) | US-PGPUB; USPAT; EPO; JPO; DERWENT | OR | ON | 2013/09/30 15:23 |
| S446 | 2 | (("20020070718") or ("20100164292")).PN. | US-PGPUB | OR | OFF | 2013/09/30 15:43 |
| S447 | 1 | ("7906871").PN. | US-PGPUB; USPAT | OR | OFF | 2013/09/30 15:45 |
| S448 | 1000 | (307/104).CCLS. | USPAT | OR | OFF | 2013/09/30 15:57 |
| S449 | 13 | S448 and fleming and young | USPAT | OR | OFF | 2013/09/30 15:57 |
| S450 | 12 | ("20040046663" \| "20050086264" \| "20050178832" \| "6236315" \| "6259369" \| "6839035" \| "7005968").PN. OR ("7280045").URPN. | US-PGPUB; USPAT; USOCR | OR | OFF | 2013/09/30 16:22 |
| S451 | 28 | ("20020044058" \| "20030043949" \| "5168282" \| "5285177" \| "5420579" \| "6069564" \| "6118379" \| "6147606" \| "6278413" \| "6281794" \| "6396438" \| "6400274" \| "6480110" \| "6516182").PN. OR ("6839035").URPN. | US-PGPUB; USPAT; USOCR | OR | OFF | 2013/09/30 16:23 |
| S452 | 14 | ("20070080804" \| "6016409" \| "6259369" \| "6351621" \| "6377764" \| "6839035").PN. OR ("7504951").URPN. | US-PGPUB; USPAT; USOCR | OR | OFF | 2013/09/30 16:25 |
| S453 | 9 | ("20050162331" \| "5270717" \| "5580664" \| "6480110" \| "6839035" \| "6924777" \| "7119671" \| "7126552" \| "7439863").PN. OR ("7696884").URPN. | US-PGPUB; USPAT; USOCR | OR | OFF | 2013/09/30 16:26 |
| S454 | 30 | ("4737789" \| "5057844").PN. OR ("5270717").URPN. | US-PGPUB; USPAT; USOCR | OR | OFF | 2013/09/30 16:29 |
| S455 | 95 | wireless$ and powered and television | EPO; JPO; DERWENT | OR | ON | 2013/09/30 18:03 |
| S456 | 1577132 | wireless$ said powered said television | US-PGPUB; USPAT | OR | ON | 2013/09/30 18:06 |

| | | | | | | |
|---|---|---|---|---|---|---|
| S457 | 722 | wireless$ same powered same television | US-PGPUB; USPAT | OR | ON | 2013/09/30 18:07 |
| S458 | 129 | wireless$ and powered and appliance | EPO; JPO; DERWENT | OR | ON | 2013/09/30 18:10 |
| S459 | 20 | inductive$ and powered and appliance | EPO; JPO; DERWENT | OR | ON | 2013/09/30 18:12 |
| S460 | 81 | inductive$ same powered same appliance | US-PGPUB; USPAT | OR | ON | 2013/09/30 18:13 |
| S461 | 32 | ("2133494" \| "2415688" \| "3320512" \| "3530499" \| "3710062").PN. OR ("3761668").URPN. | US-PGPUB; USPAT; USOCR | OR | OFF | 2013/09/30 18:23 |
| S462 | 47 | ("2133494").URPN. | USPAT | OR | OFF | 2013/09/30 18:35 |
| S463 | 11 | inductive$ and energiz$ and appliance | EPO; JPO; DERWENT | OR | ON | 2013/09/30 18:38 |
| S464 | 676 | (noncontact or (non adj contact) or contactless$) and appliance | EPO; JPO; DERWENT | OR | ON | 2013/09/30 18:40 |
| S465 | 4095392 | (noncontact or (non adj contact) or contactless$) and appliance (power or energy) | EPO; JPO; DERWENT | OR | ON | 2013/09/30 18:40 |
| S466 | 213 | (noncontact or (non adj contact) or contactless$) and appliance and (power or energy) | EPO; JPO; DERWENT | OR | ON | 2013/09/30 18:40 |
| S467 | 120 | (noncontact or (non adj contact) or contactless$) and tv and (power or energy) | EPO; JPO; DERWENT | OR | ON | 2013/09/30 19:11 |
| S468 | 51 | (noncontact or (non adj contact) or contactless$) same tv same (power or energy) | US-PGPUB; USPAT | OR | ON | 2013/09/30 19:14 |
| S469 | 14 | (noncontact or (non adj contact) or contactless$) and desktop and (power or energy) | EPO; JPO; DERWENT | OR | ON | 2013/09/30 19:17 |
| S470 | 256 | (noncontact or (non adj contact) or contactless$) and (desk or table) and (power or energy) | EPO; JPO; DERWENT | OR | ON | 2013/09/30 19:18 |
| S471 | 1297 | (noncontact or (non adj contact) or contactless$) and distance and (power or energy) | EPO; JPO; DERWENT | OR | ON | 2013/09/30 19:26 |
| S472 | 2368531 | (noncontact or (non adj contact) or contactless$) and distance and (power or energy) separat$ | EPO; JPO; DERWENT | OR | ON | 2013/09/30 19:26 |
| S473 | 104 | (noncontact or (non adj contact) or contactless$) and distance and (power or energy) and separat$ | EPO; JPO; DERWENT | OR | ON | 2013/09/30 19:26 |
| S474 | 30 | (noncontact or (non adj contact) or contactless$) same distance same (power or energy) same separat$ | EPO; JPO; DERWENT | OR | ON | 2013/09/30 19:36 |
| S475 | 322 | (noncontact or (non adj contact) or contactless$) same distance same (power or energy) same separat$ | US-PGPUB; USPAT | OR | ON | 2013/09/30 19:36 |
| S476 | 844 | (noncontact or (non adj contact) or contactless$) same (desk or table or shelf) same (power or energy) | US-PGPUB; USPAT | OR | ON | 2013/09/30 19:41 |
| S477 | 361 | (noncontact or (non adj contact) or contactless$) and distance and (power or energy) and transmission | EPO; JPO; DERWENT | OR | ON | 2013/09/30 19:49 |

| | | | | | | |
|---|---|---|---|---|---|---|
| S478 | 1735 | (wireless$ or inductive$) and distance and (power or energy) and transmission | EPO; JPO; DERWENT | OR | ON | 2013/09/30 19:57 |
| S479 | 75 | (wireless$ or inductive$) and distance and (power or energy) and transmission and meter | EPO; JPO; DERWENT | OR | ON | 2013/09/30 19:57 |
| S480 | 119 | (wireless$ or inductive$) and distance and (power or energy) and transmission and separat$ | EPO; JPO; DERWENT | OR | ON | 2013/09/30 19:58 |
| S481 | 1 | ("20120086867").PN. | US-PGPUB; USPAT; USOCR | OR | OFF | 2013/12/15 15:56 |
| S482 | 1 | S481 and television | US-PGPUB; USPAT | OR | OFF | 2013/12/15 15:57 |
| S483 | 21 | (wireless$ or contactless$ or noncontact or inductive$) same powered same television | EPO; JPO; DERWENT | OR | OFF | 2013/12/15 15:58 |
| S484 | 659 | (wireless$ or contactless$ or noncontact or inductive$) same powered same television | US-PGPUB; USPAT | OR | OFF | 2013/12/15 16:01 |
| S485 | 537 | (wireless$ or contactless$ or noncontact or inductive$) same powered same (computer or display or monitor) | EPO; JPO; DERWENT | OR | OFF | 2013/12/15 16:04 |
| S486 | 9 | ("20050162331" \| "5270717" \| "5580664" \| "6480110" \| "6839035" \| "6924777" \| "7119671" \| "7126552" \| "7439863").PN. OR ("7696884").URPN. | US-PGPUB; USPAT; USOCR | OR | OFF | 2013/12/15 16:42 |
| S487 | 3623 | q and (inductive or contactless or wireless) and (power adj supply) | EPO; JPO; DERWENT | OR | ON | 2013/12/15 17:04 |
| S488 | 45 | q and (inductive or contactless or wireless) and (power adj supply) and resonant | EPO; JPO; DERWENT | OR | ON | 2013/12/15 17:05 |
| S489 | 197 | (US-20030114769-$ or US-20110281528-$ or US-20090153273-$ or US-20050206479-$ or US-20050174197-$ or US-20040037363-$ or US-20090010028-$ or US-20080197710-$ or US-20070276538-$ or US-20070267918-$ or US-20070145830-$ or US-20050288740-$ or US-20050085873-$ or US-20020105343-$ or US-20020032471-$ or US-20050288741-$ or US-20040233043-$ or US-20040032363-$ or US-20040030260-$ or US-20030130708-$ or US-20070142872-$ or US-20060025830-$ or US-20040199212-$ or US-20020097770-$ or US-20090051224-$ or US-20030135971-$).did. or (US-20030124050-$ or US-20030126948-$ or US-20040263307-$ or US-20050007067-$ or US-20030210106-$ or US-20050151511-$ or US-20040189246-$ or US-20020089305-$ or US-20110285214-$ or US-20110101790-$ or US-20100066176-$ or US-20100036773-$ or US- | US-PGPUB; USPAT; EPO; JPO; DERWENT | OR | OFF | 2013/12/15 17:44 |

| | | | | | | |
|---|---|---|---|---|---|---|
| | | 20100007307-$ or US-20090174263-$ or US-20060071632-$ or US-20100289449-$ or US-20080001572-$ or US-20060012371-$ or US-20050258966-$ or US-20040000974-$ or US-20040134985-$ or US-20080218314-$ or US-20070241762-$ or US-20030137446-$ or US-20020130778-$ or US-20050237198-$ or US-20050104790-$).did. or (US-20050275629-$ or US-20040196262-$ or US-20040145567-$ or US-20100127660-$ or US-20040130425-$ or US-20120086867-$).did. or (US-6047214-$ or US-6307468-$ or US-6483202-$ or US-7994880-$ or US-4654573-$ or US-5367242-$ or US-6430069-$ or US-6906495-$ or US-7521890-$ or US-7599743-$ or US-6009350-$ or US-5630835-$ or US-7622891-$ or US-5519262-$ or US-6561975-$ or US-4516097-$ or US-5455467-$ or US-7825543-$ or US-7741734-$ or US-6307440-$ or US-6217604-$ or US-5057809-$ or US-6170026-$ or US-7084605-$ or US-6844702-$ or US-6184651-$).did. or (US-5923544-$ or US-4082097-$ or US-7495414-$ or US-5654621-$ or US-5702431-$ or US-5498948-$ or US-5703461-$ or US-5084699-$ or US-4450431-$ or US-4630044-$ or US-5317330-$ or US-5703573-$ or US-8310108-$ or US-6424820-$ or US-4471343-$ or US-5374930-$ or US-5053774-$ or US-5250944-$ or US-5099227-$ or US-4560445-$ or US-5541604-$ or US-5420579-$ or US-5287112-$ or US-6489745-$ or US-4656472-$ or US-7541930-$ or US-7280045-$).did. or (US-6839035-$ or US-4588978-$ or US-2274557-$ or US-5373303-$ or US-5550536-$ or US-5864323-$ or US-5033295-$ or US-7075435-$ or US-6563425-$ or US-6650227-$ or US-7826873-$ or US-7518267-$ or US-6008622-$ or US-3949388-$ or US-6211799-$ or US-4059801-$ or US-7696884-$ or US-7504951-$ or US-5270717-$ or US-2133494-$).did. or (EP-1538558-$ or WO-2004015885-$ or EP-1434160-$ or EP-558316-$ or DE-3824972-$ or EP-549832-$ or DE-3941509-$ or EP-849700-$ or WO-9827561-$).did. or (JP-2002075736-$ or JP-2005026741-$ or JP-2004206383-$ or JP-2004206245-$ or JP-11075329-$ or JP-2008125127-$ or JP-02162222-$ or JP-2004275417-$ or JP-2002345104-$).did. or (JP-11144962-$ or JP-02097005-$ or DE-20016655-$ or DE-10221484-$ or EP-1408456-$ or EP-945829-$ or US-7147604-$ or | | | | |

| | | | | | | |
|---|---|---|---|---|---|---|
| | | KR-2004072581-$ or US-20040127248-$ or EP-1071038-$ or EP-1071039-$ or JP-2000270501-$ or JP-11305848-$ or DE-19651719-$ or US-5374930-$ or US-5287112-$ or US-4802080-$ or DE-10152863-$ or DE-10152858-$ or EP-473957-$ or JP-11075329-$ or JP-08126230-$ or US-20050063488-$ or US-5697076-$ or DD-225565-$ or US-20070145830-$).did. or (WO-2007034421-$ or WO-9811505-$ or WO-9811504-$ or US-4275377-$ or US-4180795-$ or FR-2896898-$ or SG-112842-$ or WO-2005055121-$ or WO-0215112-$ or US-20060061324-$ or US-20050275629-$ or US-20040189246-$ or US-20030103039-$ or JP-2001159948-$ or JP-10260781-$ or US-6331744-$ or JP-09182323-$ or DE-102011101478-$ or US-20060176239-$ or US-6803744-$).did. | | | | |
| S490 | 76 | S489 and q | US-PGPUB; USPAT; EPO; JPO; DERWENT | OR | OFF | 2013/12/15 17:45 |
| S491 | 21 | S489 and falls | US-PGPUB; USPAT; EPO; JPO; DERWENT | OR | OFF | 2013/12/15 18:03 |
| S492 | 1 | ("6047214").PN. | USPAT; USOCR | OR | OFF | 2013/12/15 19:14 |
| S493 | 1 | ("20120086867").PN. | US-PGPUB; USPAT; USOCR | OR | OFF | 2013/12/15 20:31 |
| S494 | 197 | (US-20030114769-$ or US-20110281528-$ or US-20090153273-$ or US-20050206479-$ or US-20050174197-$ or US-20040037363-$ or US-20090010028-$ or US-20080197710-$ or US-20070276538-$ or US-20070267918-$ or US-20070145830-$ or US-20050288740-$ or US-20050085873-$ or US-20020105343-$ or US-20020032471-$ or US-20050288741-$ or US-20040233043-$ or US-20040032363-$ or US-20040030260-$ or US-20030130708-$ or US-20070142872-$ or US-20060025830-$ or US-20040199212-$ or US-20020097770-$ or US-20090051224-$ or US-20030135971-$).did. or (US-20030124050-$ or US-20030126948-$ or US-20040263307-$ or US-20050007067-$ or US-20030210106-$ or US-20050151511-$ or US-20040189246-$ or US-20020089305-$ or US-20110285214-$ or US-20110101790-$ or US-20100066176-$ or US-20100036773-$ or US- | US-PGPUB; USPAT; EPO; JPO; DERWENT | OR | OFF | 2014/02/24 21:45 |

| | | | | | | |
|---|---|---|---|---|---|---|
| | | 20100007307-$ or US-20090174263-$ or US-20060071632-$ or US-20100289449-$ or US-20080001572-$ or US-20060012371-$ or US-20050258966-$ or US-20040000974-$ or US-20040134985-$ or US-20080218314-$ or US-20070241762-$ or US-20030137446-$ or US-20020130778-$ or US-20050237198-$ or US-20050104790-$).did. or (US-20050275629-$ or US-20040196262-$ or US-20040145567-$ or US-20100127660-$ or US-20040130425-$ or US-20120086867-$).did. or (US-6047214-$ or US-6307468-$ or US-6483202-$ or US-7994880-$ or US-4654573-$ or US-5367242-$ or US-6430069-$ or US-6906495-$ or US-7521890-$ or US-7599743-$ or US-6009350-$ or US-5630835-$ or US-7622891-$ or US-5519262-$ or US-6561975-$ or US-4516097-$ or US-5455467-$ or US-7825543-$ or US-7741734-$ or US-6307440-$ or US-6217604-$ or US-5057809-$ or US-6170026-$ or US-7084605-$ or US-6844702-$ or US-6184651-$).did. or (US-5923544-$ or US-4082097-$ or US-7495414-$ or US-5654621-$ or US-5702431-$ or US-5498948-$ or US-5703461-$ or US-5084699-$ or US-4450431-$ or US-4630044-$ or US-5317330-$ or US-5703573-$ or US-8310108-$ or US-6424820-$ or US-4471343-$ or US-5374930-$ or US-5053774-$ or US-5250944-$ or US-5099227-$ or US-4560445-$ or US-5541604-$ or US-5420579-$ or US-5287112-$ or US-6489745-$ or US-4656472-$ or US-7541930-$ or US-7280045-$).did. or (US-6839035-$ or US-4588978-$ or US-2274557-$ or US-5373303-$ or US-5550536-$ or US-5864323-$ or US-5033295-$ or US-7075435-$ or US-6563425-$ or US-6650227-$ or US-7826873-$ or US-7518267-$ or US-6008622-$ or US-3949388-$ or US-6211799-$ or US-4059801-$ or US-7696884-$ or US-7504951-$ or US-5270717-$ or US-2133494-$).did. or (EP-1538558-$ or WO-2004015885-$ or EP-1434160-$ or EP-558316-$ or DE-3824972-$ or EP-549832-$ or DE-3941509-$ or EP-849700-$ or WO-9827561-$).did. or (JP-2002075736-$ or JP-2005026741-$ or JP-2004206383-$ or JP-2004206245-$ or JP-11075329-$ or JP-2008125127-$ or JP-02162222-$ or JP-2004275417-$ or JP-2002345104-$).did. or (JP-11144962-$ or JP-02097005-$ or DE-20016655-$ or DE-10221484-$ or EP-1408456-$ or EP-945829-$ or US-7147604-$ or | | | | |

| | | | | | | |
|---|---|---|---|---|---|---|
| | | KR-2004072581-$ or US-20040127248-$ or EP-1071038-$ or EP-1071039-$ or JP-2000270501-$ or JP-11305848-$ or DE-19651719-$ or US-5374930-$ or US-5287112-$ or US-4802080-$ or DE-10152863-$ or DE-10152858-$ or EP-473957-$ or JP-11075329-$ or JP-08126230-$ or US-20050063488-$ or US-5697076-$ or DD-225565-$ or US-20070145830-$).did. or (WO-2007034421-$ or WO-9811505-$ or WO-9811504-$ or US-4275377-$ or US-4180795-$ or FR-2896898-$ or SG-112842-$ or WO-2005055121-$ or WO-0215112-$ or US-20060061324-$ or US-20050275629-$ or US-20040189246-$ or US-20030103039-$ or JP-2001159948-$ or JP-10260781-$ or US-6331744-$ or JP-09182323-$ or DE-102011101478-$ or US-20060176239-$ or US-6803744-$).did. | | | | |
| S495 | 9 | S494 and litz | US-PGPUB; USPAT; EPO; JPO; DERWENT | OR | OFF | 2014/02/24 21:45 |
| S496 | 197 | (US-20030114769-$ or US-20110281528-$ or US-20090153273-$ or US-20050206479-$ or US-20050174197-$ or US-20040037363-$ or US-20090010028-$ or US-20080197710-$ or US-20070276538-$ or US-20070267918-$ or US-20070145830-$ or US-20050288740-$ or US-20050085873-$ or US-20020105343-$ or US-20020032471-$ or US-20050288741-$ or US-20040233043-$ or US-20040032363-$ or US-20040030260-$ or US-20030130708-$ or US-20070142872-$ or US-20060025830-$ or US-20040199212-$ or US-20020097770-$ or US-20090051224-$ or US-20030135971-$).did. or (US-20030124050-$ or US-20030126948-$ or US-20040263307-$ or US-20050007067-$ or US-20030210106-$ or US-20050151511-$ or US-20040189246-$ or US-20020089305-$ or US-20110285214-$ or US-20110101790-$ or US-20100066176-$ or US-20100036773-$ or US-20100007307-$ or US-20090174263-$ or US-20060071632-$ or US-20100289449-$ or US-20080001572-$ or US-20060012371-$ or US-20050258966-$ or US-20040000974-$ or US-20040134985-$ or US-20080218314-$ or US-20070241762-$ or US-20030137446-$ or US-20020130778-$ or US-20050237198-$ or US-20050104790-$).did. or (US-20050275629-$ or US-20040196262- | US-PGPUB; USPAT; EPO; JPO; DERWENT | OR | OFF | 2014/02/25 16:53 |

| | | | | | | |
|---|---|---|---|---|---|---|
| | | $ or US-20040145567-$ or US-20100127660-$ or US-20040130425-$ or US-20120086867-$).did. or (US-6047214-$ or US-6307468-$ or US-6483202-$ or US-7994880-$ or US-4654573-$ or US-5367242-$ or US-6430069-$ or US-6906495-$ or US-7521890-$ or US-7599743-$ or US-6009350-$ or US-5630835-$ or US-7622891-$ or US-5519262-$ or US-6561975-$ or US-4516097-$ or US-5455467-$ or US-7825543-$ or US-7741734-$ or US-6307440-$ or US-6217604-$ or US-5057809-$ or US-6170026-$ or US-7084605-$ or US-6844702-$ or US-6184651-$).did. or (US-5923544-$ or US-4082097-$ or US-7495414-$ or US-5654621-$ or US-5702431-$ or US-5498948-$ or US-5703461-$ or US-5084699-$ or US-4450431-$ or US-4630044-$ or US-5317330-$ or US-5703573-$ or US-8310108-$ or US-6424820-$ or US-4471343-$ or US-5374930-$ or US-5053774-$ or US-5250944-$ or US-5099227-$ or US-4560445-$ or US-5541604-$ or US-5420579-$ or US-5287112-$ or US-6489745-$ or US-4656472-$ or US-7541930-$ or US-7280045-$).did. or (US-6839035-$ or US-4588978-$ or US-2274557-$ or US-5373303-$ or US-5550536-$ or US-5864323-$ or US-5033295-$ or US-7075435-$ or US-6563425-$ or US-6650227-$ or US-7826873-$ or US-7518267-$ or US-6008622-$ or US-3949388-$ or US-6211799-$ or US-4059801-$ or US-7696884-$ or US-7504951-$ or US-5270717-$ or US-2133494-$).did. or (EP-1538558-$ or WO-2004015885-$ or EP-1434160-$ or EP-558316-$ or DE-3824972-$ or EP-549832-$ or DE-3941509-$ or EP-849700-$ or WO-9827561-$).did. or (JP-2002075736-$ or JP-2005026741-$ or JP-2004206383-$ or JP-2004206245-$ or JP-11075329-$ or JP-2008125127-$ or JP-02162222-$ or JP-2004275417-$ or JP-2002345104-$).did. or (JP-11144962-$ or JP-02097005-$ or DE-20016655-$ or DE-10221484-$ or EP-1408456-$ or EP-945829-$ or US-7147604-$ or KR-2004072581-$ or US-20040127248-$ or EP-1071038-$ or EP-1071039-$ or JP-2000270501-$ or JP-11305848-$ or DE-19651719-$ or US-5374930-$ or US-5287112-$ or US-4802080-$ or DE-10152863-$ or DE-10152858-$ or EP-473957-$ or JP-11075329-$ or JP-08126230-$ or US-20050063488-$ or US-5697076-$ or DD-225565-$ or US-20070145830-$).did. or (WO-2007034421-$ or WO- | | | | |

| | | | | | | |
|---|---|---|---|---|---|---|
| | | 9811505-$ or WO-9811504-$ or US-4275377-$ or US-4180795-$ or FR-2896898-$ or SG-112842-$ or WO-2005055121-$ or WO-0215112-$ or US-20060061324-$ or US-20050275629-$ or US-20040189246-$ or US-20030103039-$ or JP-2001159948-$ or JP-10260781-$ or US-6331744-$ or JP-09182323-$ or DE-102011101478-$ or US-20060176239-$ or US-6803744-$).did. | | | | |
| S497 | 9 | S496 and litz | US-PGPUB; USPAT; EPO; JPO; DERWENT | OR | OFF | 2014/02/25 16:53 |
| S498 | 0 | S497 and tire | USPAT | OR | OFF | 2014/02/25 16:53 |
| S499 | 197 | (US-20030114769-$ or US-20110281528-$ or US-20090153273-$ or US-20050206479-$ or US-20050174197-$ or US-20040037363-$ or US-20090010028-$ or US-20080197710-$ or US-20070276538-$ or US-20070267918-$ or US-20070145830-$ or US-20050288740-$ or US-20050085873-$ or US-20020105343-$ or US-20020032471-$ or US-20050288741-$ or US-20040233043-$ or US-20040032363-$ or US-20040030260-$ or US-20030130708-$ or US-20070142872-$ or US-20060025830-$ or US-20040199212-$ or US-20020097770-$ or US-20090051224-$ or US-20030135971-$).did. or (US-20030124050-$ or US-20030126948-$ or US-20040263307-$ or US-20050007067-$ or US-20030210106-$ or US-20050151511-$ or US-20040189246-$ or US-20020089305-$ or US-20110285214-$ or US-20110101790-$ or US-20100066176-$ or US-20100036773-$ or US-20100007307-$ or US-20090174263-$ or US-20060071632-$ or US-20100289449-$ or US-20080001572-$ or US-20060012371-$ or US-20050258966-$ or US-20040000974-$ or US-20040134985-$ or US-20080218314-$ or US-20070241762-$ or US-20030137446-$ or US-20020130778-$ or US-20050237198-$ or US-20050104790-$).did. or (US-20050275629-$ or US-20040196262-$ or US-20040145567-$ or US-20100127660-$ or US-20040130425-$ or US-20120086867-$).did. or (US-6047214-$ or US-6307468-$ or US-6483202-$ or US-7994880-$ or US-4654573-$ or US-5367242-$ or US-6430069-$ or US-6906495-$ or US-7521890-$ or US-7599743-$ or US- | US-PGPUB; USPAT; EPO; JPO; DERWENT | OR | OFF | 2014/02/25 16:53 |

| | | | | | | |
|---|---|---|---|---|---|---|
| | | 6009350-$ or US-5630835-$ or US-7622891-$ or US-5519262-$ or US-6561975-$ or US-4516097-$ or US-5455467-$ or US-7825543-$ or US-7741734-$ or US-6307440-$ or US-6217604-$ or US-5057809-$ or US-6170026-$ or US-7084605-$ or US-6844702-$ or US-6184651-$).did. or (US-5923544-$ or US-4082097-$ or US-7495414-$ or US-5654621-$ or US-5702431-$ or US-5498948-$ or US-5703461-$ or US-5084699-$ or US-4450431-$ or US-4630044-$ or US-5317330-$ or US-5703573-$ or US-8310108-$ or US-6424820-$ or US-4471343-$ or US-5374930-$ or US-5053774-$ or US-5250944-$ or US-5099227-$ or US-4560445-$ or US-5541604-$ or US-5420579-$ or US-5287112-$ or US-6489745-$ or US-4656472-$ or US-7541930-$ or US-7280045-$).did. or (US-6839035-$ or US-4588978-$ or US-2274557-$ or US-5373303-$ or US-5550536-$ or US-5864323-$ or US-5033295-$ or US-7075435-$ or US-6563425-$ or US-6650227-$ or US-7826873-$ or US-7518267-$ or US-6008622-$ or US-3949388-$ or US-6211799-$ or US-4059801-$ or US-7696884-$ or US-7504951-$ or US-5270717-$ or US-2133494-$).did. or (EP-1538558-$ or WO-2004015885-$ or EP-1434160-$ or EP-558316-$ or DE-3824972-$ or EP-549832-$ or DE-3941509-$ or EP-849700-$ or WO-9827561-$).did. or (JP-2002075736-$ or JP-2005026741-$ or JP-2004206383-$ or JP-2004206245-$ or JP-11075329-$ or JP-2008125127-$ or JP-02162222-$ or JP-2004275417-$ or JP-2002345104-$).did. or (JP-11144962-$ or JP-02097005-$ or DE-20016655-$ or DE-10221484-$ or EP-1408456-$ or EP-945829-$ or US-7147604-$ or KR-2004072581-$ or US-20040127248-$ or EP-1071038-$ or EP-1071039-$ or JP-2000270501-$ or JP-11305848-$ or DE-19651719-$ or US-5374930-$ or US-5287112-$ or US-4802080-$ or DE-10152863-$ or DE-10152858-$ or EP-473957-$ or JP-11075329-$ or JP-08126230-$ or US-20050063488-$ or US-5697076-$ or DD-225565-$ or US-20070145830-$).did. or (WO-2007034421-$ or WO-9811505-$ or WO-9811504-$ or US-4275377-$ or US-4180795-$ or FR-2896898-$ or SG-112842-$ or WO-2005055121-$ or WO-0215112-$ or US-20060061324-$ or US-20050275629-$ or US-20040189246-$ or US-20030103039-$ or JP-2001159948-$ or JP-10260781-$ or | | | | |

| | | | | | | |
|---|---|---|---|---|---|---|
| | | US-6331744-$ or JP-09182323-$ or DE-102011101478-$ or US-20060176239-$ or US-6803744-$).did. | | | | |
| S500 | 4 | S499 and tire | USPAT | OR | OFF | 2014/02/25 16:53 |
| S501 | 2634 | (307/104).CCLS. | US-PGPUB; USPAT | OR | OFF | 2014/05/05 06:31 |
| S502 | 94 | ("20020130642" \| "20020167294" \| "20030071034" \| "20030160590" \| "20040026998" \| "20040130425" \| "20040142733" \| "20040189246" \| "20040227057" \| "20050021135" \| "20050033382" \| "20050104453" \| "20050116683" \| "20050140482" \| "20050189945" \| "20050194926" \| "20050253152" \| "20050288742" \| "20060001509" \| "20060053296" \| "20060066443" \| "20060164866" \| "20060184209" \| "20060184210" \| "20060199620" \| "20060214626" \| "20060219448" \| "20060238365" \| "20060281435" \| "20070010295" \| "20070013483" \| "20070016089" \| "20070024246" \| "20070069687" \| "20070096875" \| "20070105429" \| "20070117596" \| "20070126650" \| "20070176840" \| "20070208263" \| "3780425" \| "3871176" \| "4095998" \| "4280129" \| "5229652" \| "5408209" \| "5522856" \| "5541604" \| "5565763" \| "5630835" \| "5697956" \| "5703461" \| "5710413" \| "5742471" \| "5821728" \| "5821731" \| "5903134" \| "5923544" \| "5940509" \| "5957956" \| "5959245" \| "5993996" \| "6012659" \| "6047214" \| "6066163" \| "6067473" \| "6108579" \| "6127799" \| "6207887" \| "6232841" \| "6238387" \| "6252762" \| "6473028" \| "6483202" \| "6535133" \| "6561975" \| "6609023" \| "6631072" \| "6683256" \| "6696647" \| "6703921" \| "6803744" \| "6858970" \| "6961619" \| "6967462" \| "6988026" \| "7027311" \| "7035076" \| "7084605" \| "7127293" \| "7193418" \| "7233137" \| "7251527" \| "7288918").PN. | US-PGPUB; USPAT | OR | OFF | 2014/05/05 06:32 |
| S503 | 106440 | ("20050027192" \| "20050135122" \| "4588978" \| "5033295" \| "5864323" \| "6176433" \| "6563425" \| "6839035" \| "7443135" \| "7545337" \| "7863859" \| "8131378")".PN" | US-PGPUB; USPAT | OR | OFF | 2014/05/05 06:33 |
| S504 | 12 | ("20050027192" \| "20050135122" \| "4588978" \| "5033295" \| "5864323" \| "6176433" \| "6563425" \| "6839035" \| "7443135" \| "7545337" \| "7863859" \| "8131378").PN. | US-PGPUB; USPAT | OR | OFF | 2014/05/05 06:34 |
| S505 | 106 | S502 or S504 | US-PGPUB; USPAT | OR | OFF | 2014/05/05 06:34 |

**EAST Search History (Interference)**

| Ref # | Hits | Search Query | DBs | Default Operator | Plurals | Time Stamp |
|---|---|---|---|---|---|---|
| S150 | 0 | ((resonator or resonant or resonance) same intrinsic same loss same characterstic same size).clm. | US-PGPUB; USPAT; UPAD | OR | ON | 2012/09/10 11:55 |
| S151 | 0 | ((resonator or resonant or resonance) and intrinsic and loss and characterstic and size).clm. | US-PGPUB; USPAT; UPAD | OR | ON | 2012/09/10 11:56 |
| S152 | 15 | ((resonator or resonant or resonance) and intrinsic and loss and characterstic and size) | US-PGPUB; USPAT; UPAD | OR | ON | 2012/09/10 11:57 |
| S153 | 0 | ((resonator or resonant or resonance) same characterstic same size).clm. | US-PGPUB; USPAT; UPAD | OR | ON | 2012/09/10 11:59 |
| S154 | 147 | ((resonator or resonant or resonance) same characteristic same size).clm. | US-PGPUB; USPAT; UPAD | OR | ON | 2012/09/10 12:03 |
| S156 | 10 | (resonator same (resonance or resonant) same frequency same intrinsic same loss same transfer same rate).clm. | US-PGPUB; USPAT; UPAD | OR | ON | 2012/09/10 13:42 |
| S158 | 1 | (resonator same (resonance or resonant) same frequency same intrinsic same loss same "near" same field same q same factor).clm. | US-PGPUB; USPAT; UPAD | OR | ON | 2012/09/10 14:50 |
| S182 | 10 | (resonator same (resonance or resonant) same frequency same intrinsic same loss same transfer same rate).clm. | US-PGPUB; USPAT; UPAD | OR | ON | 2012/09/21 20:55 |
| S218 | 1 | (resonator same (resonance or resonant) same frequency same intrinsic same loss same high same (q or quality)).clm. | US-PGPUB; USPAT; UPAD | OR | ON | 2012/12/10 23:01 |
| S506 | 4 | (resonator same (resonance or resonant) same frequency same intrinsic same loss same high same (q or quality)).clm. | US-PGPUB; USPAT; UPAD | OR | ON | 2014/05/05 06:27 |

**5/5/2014 10:37:35 AM**
**C:\Users\ffleming\Documents\EAST\Workspaces\2836\FY2012\mit wireless power.wsp**

| Search Notes | Application/Control No. | Applicant(s)/Patent Under Reexamination |
|---|---|---|
| | 12639963 | JOANNOPOULOS ET AL. |
| | **Examiner** | **Art Unit** |
| | Fritz M. Fleming | 2836 |

## CPC- SEARCHED

| Symbol | Date | Examiner |
|---|---|---|
| | | |

## CPC COMBINATION SETS - SEARCHED

| Symbol | Date | Examiner |
|---|---|---|
| | | |

## US CLASSIFICATION SEARCHED

| Class | Subclass | Date | Examiner |
|---|---|---|---|
| 307 | 104 | 9/23/11 | awp |
| 333 | 195 | 9/23/11 | awp |

## SEARCH NOTES

| Search Notes | Date | Examiner |
|---|---|---|
| EAST | 9/23/11 | awp |
| Updated Search | 8/27/2012 | FMF |
| Updated search. | 6/12/2013 | FMF |
| updated search, IEEE search terms near field, high Q, loop antenna. | 2/24/2014 | FMF |
| updated search. | 5/5/2014 | FMF |

## INTERFERENCE SEARCH

| US Class/ CPC Symbol | US Subclass / CPC Group | Date | Examiner |
|---|---|---|---|
| | see interference search printout. | 5/5/2014 | FMF |

| | |
|---|---|
| | /FRITZ M FLEMING/<br>Primary Examiner,Art Unit 2836 |

IN THE UNITED STATES PATENT AND TRADEMARK OFFICE

| | | | | | |
|---|---|---|---|---|---|
| First Named Inventor | : | John D. Joannopoulos | Art Unit | : | 2836 |
| | | | Examiner | : | Fritz Fleming |
| Serial No. | : | 12/639,963 | Confirmation No. | : | 7811 |
| Filed | : | December 16, 2009 | Notice of Allowance Date: May 8, 2014 | | |
| Title | : | WIRELESS ENERGY TRANSFER WITH HIGH-Q TO MORE THAN ONE DEVICE | | | |

**MAIL STOP ISSUE FEE**
Commissioner for Patents
P.O. Box 1450
Alexandria, VA 22313-1450

RESPONSE TO NOTICE OF ALLOWANCE

In response to the Notice of Allowance mailed May 8, 2014, enclosed is a completed Part B - Fee(s) Transmittal.

The issue fee in the amount of $960 is being paid concurrently herewith. In addition, please apply any other necessary charges or credits to Deposit Account 06-1050, referencing the above attorney docket number.

Respectfully submitted,

Date: May 13, 2014

/Marc M. Wefers Reg. No. 56,842/
Marc M. Wefers
Reg. No. 56,842

Customer Number 26161
Fish & Richardson P.C.
Telephone: (617) 542-5070
Facsimile: (877) 769-7945

23220450.doc

## PART B - FEE(S) TRANSMITTAL

**Complete and send this form, together with applicable fee(s), to: Mail Mail Stop ISSUE FEE**
**Commissioner for Patents**
**P.O. Box 1450**
**Alexandria, Virginia 22313-1450**
**or Fax (571)-273-2885**

INSTRUCTIONS: This form should be used for transmitting the ISSUE FEE and PUBLICATION FEE (if required). Blocks 1 through 5 should be completed where appropriate. All further correspondence including the Patent, advance orders and notification of maintenance fees will be mailed to the current correspondence address as indicated unless corrected below or directed otherwise in Block 1, by (a) specifying a new correspondence address; and/or (b) indicating a separate "FEE ADDRESS" for maintenance fee notifications.

CURRENT CORRESPONDENCE ADDRESS (Note: Use Block 1 for any change of address)

26161 7590 5/8/14

FISH & RICHARDSON P.C.
P.O. BOX 1022
MINNEAPOLIS, MN 55440-1022

Note: A certificate of mailing can only be used for domestic mailings of the Fee(s) Transmittal. This certificate cannot be used for any other accompanying papers. Each additional paper, such as an assignment or formal drawing, must have its own certificate of mailing or transmission.

**Certificate of Mailing or Transmission**

I hereby certify that this Fee(s) Transmittal is being deposited with the United States Postal Service with sufficient postage for first class mail in an envelope addressed to the Mail Stop ISSUE FEE address above, or being facsimile transmitted to the USPTO (571) 273-2885, on the date indicated below.

(Depositor's name)

(Signature)

(Date)

| APPLICATION NO. | FILING DATE | FIRST NAMED INVENTOR | ATTORNEY DOCKET NO. | CONFIRMATION NO. |
|---|---|---|---|---|
| 12/639,963 | 12/16/2009 | John D. Joannopoulos | 01997-0359009 | 7811 |

TITLE OF INVENTION: WIRELESS ENERGY TRANSFER WITH HIGH-Q TO MORE THAN ONE DEVICE

| APPLN. TYPE | ENTITY STATUS | ISSUE FEE DUE | PUBLICATION FEE DUE | PREV. PAID ISSUE FEE | TOTAL FEE(S) DUE | DATE DUE |
|---|---|---|---|---|---|---|
| nonprovisional | LARGE | $960 | $0 | $0 | $960 | 08/08/2014 |

| EXAMINER | ART UNIT | CLASS-SUBCLASS |
|---|---|---|
| FLEMING, FRITZ | 2836 | 307-104000 |

1. Change of correspondence address or indication of "Fee Address" (37 CFR 1.363).

[ ] Change of correspondence address (or Change of Correspondence Address form PTO/SB/122) attached.

[ ] "Fee Address" indication (or "Fee Address" Indication form PTO/SB/47; Rev 03-02 or more recent) attached. **Use of a Customer Number is required.**

2. For printing on the patent front page, list

(1) the names of up to 3 registered patent attorneys or agents OR, alternatively,

(2) the name of a single firm (having as a member a registered attorney or agent) and the names of up to 2 registered patent attorneys or agents. If no name is listed, no name will be printed.

1 Fish & Richardson P.C.
2
3

3. ASSIGNEE NAME AND RESIDENCE DATA TO BE PRINTED ON THE PATENT (print or type)

PLEASE NOTE: Unless an assignee is identified below, no assignee data will appear on the patent. If an assignee is identified below, the document has been filed for recordation as set forth in 37 CFR 3.11. Completion of this form is NOT a substitute for filing an assignment.

(A) NAME OF ASSIGNEE
Massachusetts Institute of Technology

(B) RESIDENCE: (CITY and STATE OR COUNTRY)
Cambridge, Massachusetts

Please check the appropriate assignee category or categories (will not be printed on the patent): [ ] Individual [X] Corporation or other private group entity [ ] Government

4a. The following fee(s) are submitted:

[X] Issue Fee
[ ] Publication Fee (No small entity discount permitted)
[ ] Advance Order - # of Copies _____

4b. Payment of Fee(s): (**Please first reapply any previously paid issue fee shown above**)

[ ] A check in the amount of the fee(s) is enclosed.
[ ] Payment by credit card. Form PTO-2038 is attached.
[X] The Director is hereby authorized to charge the required fee(s), or credit any overpayment, to Deposit Account Number 06-1050

5. **Change in Entity Status** (from status indicated above)

[ ] Applicant certifying micro entity status. See 37 CFR 1.29 — **NOTE**: Absent a valid certification of Micro Entity Status (see form PTO/SB/15A and 15B), issue fee payment in the micro entity amount will not be accepted at the risk of application abandonment.

[ ] Applicant asserting small entity status. See 37 CFR 1.27. — **NOTE**: If the application was previously under micro entity status, checking this box will be taken to be a notification of loss of entitlement to micro entity status.

[ ] Applicant changing to regular undiscounted fee status. — **NOTE**: Checking this box will be taken to be a notification of loss of entitlement to small or micro entity status, as applicable.

The Director of the USPTO is requested to apply the Issue Fee and Publication Fee (if any) or to re-apply any previously paid issue fee to the application identified above.
NOTE: The Issue Fee and Publication Fee (if required) will not be accepted from anyone other than the applicant; a registered attorney or agent; or the assignee or other party in interest as shown by the records of the United States Patent and Trademark Office.

Authorized Signature /Marc M. Wefers Reg. No. 56,842/ Date May 13, 2014

Typed or printed name Marc M. Wefers Registration No. 56,842

23220451.doc

# Electronic Patent Application Fee Transmittal

| | |
|---|---|
| **Application Number:** | 12639963 |
| **Filing Date:** | 16-Dec-2009 |
| **Title of Invention:** | WIRELESS ENERGY TRANSFER WITH HIGH-Q TO MORE THAN ONE DEVICE |
| **First Named Inventor/Applicant Name:** | John D. Joannopoulos |
| **Filer:** | Marc M. Wefers/Cheryl Forrest |
| **Attorney Docket Number:** | 01997-0359009 / MIT 11757 |

Filed as Large Entity

## Utility under 35 USC 111(a) Filing Fees

| Description | Fee Code | Quantity | Amount | Sub-Total in USD($) |
|---|---|---|---|---|
| **Basic Filing:** | | | | |
| **Pages:** | | | | |
| **Claims:** | | | | |
| **Miscellaneous-Filing:** | | | | |
| **Petition:** | | | | |
| **Patent-Appeals-and-Interference:** | | | | |
| **Post-Allowance-and-Post-Issuance:** | | | | |
| Utility Appl Issue Fee | 1501 | 1 | 960 | 960 |
| **Extension-of-Time:** | | | | |

| Description | Fee Code | Quantity | Amount | Sub-Total in USD($) |
|---|---|---|---|---|
| Miscellaneous: | | | | |
| | | Total in USD ($) | | 960 |

# Electronic Acknowledgement Receipt

| | |
|---|---|
| **EFS ID:** | 19016959 |
| **Application Number:** | 12639963 |
| **International Application Number:** | |
| **Confirmation Number:** | 7811 |
| **Title of Invention:** | WIRELESS ENERGY TRANSFER WITH HIGH-Q TO MORE THAN ONE DEVICE |
| **First Named Inventor/Applicant Name:** | John D. Joannopoulos |
| **Customer Number:** | 26161 |
| **Filer:** | Marc M. Wefers/Stacey Hill |
| **Filer Authorized By:** | Marc M. Wefers |
| **Attorney Docket Number:** | 01997-0359009 / MIT 11757 |
| **Receipt Date:** | 13-MAY-2014 |
| **Filing Date:** | 16-DEC-2009 |
| **Time Stamp:** | 14:04:31 |
| **Application Type:** | Utility under 35 USC 111(a) |

## Payment information:

| | |
|---|---|
| Submitted with Payment | yes |
| Payment Type | Deposit Account |
| Payment was successfully received in RAM | $960 |
| RAM confirmation Number | 118 |
| Deposit Account | 061050 |
| Authorized User | |

## File Listing:

| Document Number | Document Description | File Name | File Size(Bytes)/ Message Digest | Multi Part /.zip | Pages (if appl.) |
|---|---|---|---|---|---|

| | | | | | |
|---|---|---|---|---|---|
| 1 | Issue Fee Payment (PTO-85B) | ReplytoNOA.pdf | 143280<br>594c758389067db72abede2430ce0442ba081f35 | no | 2 |
| **Warnings:** | | | | | |
| **Information:** | | | | | |
| 2 | Fee Worksheet (SB06) | fee-info.pdf | 30358<br>ec6d15c36be83767cd2149870e28ac14432f2166 | no | 2 |
| **Warnings:** | | | | | |
| **Information:** | | | | | |
| | | **Total Files Size (in bytes):** | 173638 | | |

**This Acknowledgement Receipt evidences receipt on the noted date by the USPTO of the indicated documents, characterized by the applicant, and including page counts, where applicable. It serves as evidence of receipt similar to a Post Card, as described in MPEP 503.**

**New Applications Under 35 U.S.C. 111**
**If a new application is being filed and the application includes the necessary components for a filing date (see 37 CFR 1.53(b)-(d) and MPEP 506), a Filing Receipt (37 CFR 1.54) will be issued in due course and the date shown on this Acknowledgement Receipt will establish the filing date of the application.**

**National Stage of an International Application under 35 U.S.C. 371**
**If a timely submission to enter the national stage of an international application is compliant with the conditions of 35 U.S.C. 371 and other applicable requirements a Form PCT/DO/EO/903 indicating acceptance of the application as a national stage submission under 35 U.S.C. 371 will be issued in addition to the Filing Receipt, in due course.**

**New International Application Filed with the USPTO as a Receiving Office**
**If a new international application is being filed and the international application includes the necessary components for an international filing date (see PCT Article 11 and MPEP 1810), a Notification of the International Application Number and of the International Filing Date (Form PCT/RO/105) will be issued in due course, subject to prescriptions concerning national security, and the date shown on this Acknowledgement Receipt will establish the international filing date of the application.**

| Substitute Form PTO-1449 (Modified) U.S. Department of Commerce Patent and Trademark Office | Attorney Docket No. 01997-0359009 | Application No. 12/639,963 |
|---|---|---|
| **Information Disclosure Statement by Applicant** (Use several sheets if necessary) | Applicant John D. Joannopoulos et al. | |
| (37 CFR §1.98(b)) | Filing Date December 16, 2009 | Group Art Unit |

**U.S. Patent Documents**

| Examiner Initial | Desig. ID | Document Number | Publication Date | Patentee | Class | Subclass | Filing Date If Appropriate |
|---|---|---|---|---|---|---|---|
| | 1 | 5,118,997 | 6/2/1992 | El-Hamamsy | | | |
| | 2 | 5,986,895 | 11/16/1999 | Stewart et al. | | | |
| | 3 | 7,147,604 | 12/12/2006 | Allen et al. | | | |
| | 4 | 7,191,007 | 3/13/2007 | Desai et al. | | | |
| | 5 | 7,599,743 | 10/6/2009 | Hassler, Jr. et al. | | | |
| | 6 | 7,639,514 | 12/29/2009 | Baarman | | | |
| | 7 | 7,825,543 | 11/2/2010 | Karalis et al. | | | |
| | 8 | 7,843,288 | 11/30/2010 | Lee et al. | | | |
| | 9 | 2005/0288739 | 12/29/2005 | Hassler, Jr. et al. | | | |
| | 10 | 2005/0288740 | 12/29/2005 | Hassler, Jr. et al. | | | |
| | 11 | 2007/0182367 | 8/9/2007 | Partovi | | | |
| | 12 | 2008/0012569 | 1/17/2008 | Hall et al. | | | |
| | 13 | 2008/0030415 | 2/7/2008 | Homan et al. | | | |
| | 14 | 2008/0067874 | 3/20/2008 | Tseng | | | |
| | 15 | 2008/0265684 | 10/30/2008 | Farkas | | | |
| | 16 | 2009/0015075 | 1/15/2009 | Cook et al. | | | |
| | 17 | 2009/0067198 | 3/12/2009 | Graham et al. | | | |
| | 18 | 2009/0085408 | 4/2/2009 | Bruhn | | | |
| | 19 | 2009/0085706 | 4/2/2009 | Baarman et al. | | | |
| | 20 | 2009/0096413 | 4/16/2009 | Patovi et al. | | | |
| Change(s) applied to document, /M.H.E./ 5/22/2014 | 21 | ~~2009/0180679~~ | 4/30/2009 | Porwal | | 20090108679 | |
| | 22 | 2009/0108997 | 4/30/2009 | Patterson et al. | | | |
| | 23 | 2009/0146892 | 6/11/2009 | Shimizu et al. | | | |
| | 24 | 2009/0160261 | 6/25/2009 | Elo | | | |
| | 25 | 2009/0174263 | ~~9/9/2009~~ | Baarman et al. | | July 9, 2009 | |
| | 26 | 2009/0189458 | 7/30/2009 | Kawasaki | | | |
| | 27 | 2009/0230777 | 9/17/2009 | Baarman et al. | | | |

| Examiner Signature /Albert Paladini/ | Date Considered 09/23/2011 |
|---|---|
| EXAMINER: Initials citation considered. Draw line through citation if not in conformance and not considered. Include copy of this form with next communication to applicant. | |

Substitute Disclosure Form (PTO-1449)

ALL REFERENCES CONSIDERED EXCEPT WHERE LINED THROUGH. /A.P./

UNITED STATES PATENT AND TRADEMARK OFFICE

UNITED STATES DEPARTMENT OF COMMERCE
United States Patent and Trademark Office
Address: COMMISSIONER FOR PATENTS
P.O. Box 1450
Alexandria, Virginia 22313-1450
www.uspto.gov

| APPLICATION NO. | ISSUE DATE | PATENT NO. | ATTORNEY DOCKET NO. | CONFIRMATION NO. |
|---|---|---|---|---|
| 12/639,963 | 06/24/2014 | 8760007 | 01997-0359009 / MIT 11757 | 7811 |

26161 7590 06/04/2014
FISH & RICHARDSON P.C. (BO)
P.O. BOX 1022
MINNEAPOLIS, MN 55440-1022

# ISSUE NOTIFICATION

The projected patent number and issue date are specified above.

**Determination of Patent Term Adjustment under 35 U.S.C. 154 (b)**
(application filed on or after May 29, 2000)

The Patent Term Adjustment is 345 day(s). Any patent to issue from the above-identified application will include an indication of the adjustment on the front page.

If a Continued Prosecution Application (CPA) was filed in the above-identified application, the filing date that determines Patent Term Adjustment is the filing date of the most recent CPA.

Applicant will be able to obtain more detailed information by accessing the Patent Application Information Retrieval (PAIR) WEB site (http://pair.uspto.gov).

Any questions regarding the Patent Term Extension or Adjustment determination should be directed to the Office of Patent Legal Administration at (571)-272-7702. Questions relating to issue and publication fee payments should be directed to the Application Assistance Unit (AAU) of the Office of Data Management (ODM) at (571)-272-4200.

APPLICANT(s) (Please see PAIR WEB site http://pair.uspto.gov for additional applicants):

John D. Joannopoulos, Belmont, MA;
Aristeidis Karalis, Boston, MA;
Marin Soljacic, Belmont, MA;

The United States represents the largest, most dynamic marketplace in the world and is an unparalleled location for business investment, innovation, and commercialization of new technologies. The USA offers tremendous resources and advantages for those who invest and manufacture goods here. Through SelectUSA, our nation works to encourage and facilitate business investment. To learn more about why the USA is the best country in the world to develop technology, manufacture products, and grow your business, visit SelectUSA.gov.

IR103 (Rev. 10/09)

IN THE UNITED STATES PATENT AND TRADEMARK OFFICE

| | | | | | |
|---|---|---|---|---|---|
| First Named Inventor | : | John D. Joannopoulos | Art Unit | : | 2836 |
| Patent No. | : | 8,760,007 | Examiner | : | Fritz Fleming |
| Issue Date | : | June 24, 2014 | Conf. No. | : | 7811 |
| Serial No. | : | 12/639,963 | | | |
| Filed | : | December 16, 2009 | | | |

Title : WIRELESS ENERGY TRANSFER WITH HIGH-Q TO MORE THAN ONE DEVICE

Attention Certificate of Corrections Branch
Commissioner for Patents
P.O. Box 1450
Alexandria, VA 22313-1450

REQUEST FOR CERTIFICATE OF CORRECTION

Please issue a certificate of correction in accordance with the attached form.

One or more of the errors to be corrected were made by applicant. The fee of $100 is being paid with this request.

Apply any other necessary charges or credits to Deposit Account 06- 1050, referencing the above attorney docket number.

Respectfully submitted,

Date: July 21, 2014

/Marc M. Wefers Reg. No. 56,842/
Marc M. Wefers
Reg. No. 56,842

Customer Number 26161
Fish & Richardson P.C.
Telephone: (617) 542-5070
Facsimile: (877) 769-7945

23264214.doc

PTO/SB/44 (09-07)
Approved for use through 08/31/2013. OMB 0651-0033
U.S. Patent and Trademark Office; U.S. DEPARTMENT OF COMMERCE
Under the Paperwork Reduction Act of 1995, no persons are required to respond to a collection of information unless it displays a valid OMB control number.
(Also Form PTO-1050)

# UNITED STATES PATENT AND TRADEMARK OFFICE
## CERTIFICATE OF CORRECTION



PATENT NO. : 8,760,007

APPLICATION NO.: 12/639,963

ISSUE DATE : June 24, 2014

INVENTOR(S) : John D. Joannopoulos, Aristeidis Karalis and Marin Soljacic

It is certified that an error appears or errors appear in the above-identified patent and that said Letters Patent is hereby corrected as shown below:

Page 1

Column 1 (Other Publications), Line 1, delete "Artificail" and insert -- Artificial --

Column 1 (Other Publications), Line 2, delete "Artificaial" and insert -- Artificial --

Page 4

Column 2 (Other Publications), Line 1, delete "Transmisision" and insert -- Transmission --

Column 2 (Other Publications), Line 2, delete "Lnks" and insert -- Links --

Page 5

Column 1 (Other Publications), Line 46, delete Reasonators" and insert -- Resonators --

Column 2 (Other Publications), Line 46, delete "propogation" and insert -- propagation --

Column 12

Line 15, in Claim 1, delete "$\Gamma_2$" and insert -- $\Gamma_3$ --

Line 61, in Claim 14, delete "$\kappa/\sqrt{\Gamma_2\Gamma_2} > 0.5$" and inset -- $\kappa/\sqrt{\Gamma_1\Gamma_2} > 0.5$ --

MAILING ADDRESS OF SENDER (Please do not use customer number below):
Fish & Richardson P.C.
P.O. Box 1022
Minneapolis, MN 55440-1022

This collection of information is required by 37 CFR 1.322, 1.323, and 1.324. The information is required to obtain or retain a benefit by the public which is to file (and by the USPTO to process) an application. Confidentiality is governed by 35 U.S.C. 122 and 37 CFR 1.14. This collection is estimated to take 1.0 hour to complete, including gathering, preparing, and submitting the completed application form to the USPTO. Time will vary depending upon the individual case. Any comments on the amount of time you require to complete this form and/or suggestions for reducing this burden, should be sent to the Chief Information Officer, U.S. Patent and Trademark Office, U.S. Department of Commerce, P.O. Box 1450, Alexandria, VA 22313-1450. DO NOT SEND FEES OR COMPLETED FORMS TO THIS ADDRESS. SEND TO: Attention Certificate of Corrections Branch, Commissioner for Patents, P.O. Box 1450, Alexandria, VA 22313-1450.

*If you need assistance in completing the form, call 1-800-PTO-9199 and selection option2.*

# Electronic Patent Application Fee Transmittal

| | |
|---|---|
| **Application Number:** | 12639963 |
| **Filing Date:** | 16-Dec-2009 |
| **Title of Invention:** | WIRELESS ENERGY TRANSFER WITH HIGH-Q TO MORE THAN ONE DEVICE |
| **First Named Inventor/Applicant Name:** | John D. Joannopoulos |
| **Filer:** | Marc M. Wefers/Cheryl Forrest |
| **Attorney Docket Number:** | 01997-0359009 / MIT 11757 |

Filed as Large Entity

## Utility under 35 USC 111(a) Filing Fees

| Description | Fee Code | Quantity | Amount | Sub-Total in USD($) |
|---|---|---|---|---|
| **Basic Filing:** | | | | |
| **Pages:** | | | | |
| **Claims:** | | | | |
| **Miscellaneous-Filing:** | | | | |
| **Petition:** | | | | |
| **Patent-Appeals-and-Interference:** | | | | |
| **Post-Allowance-and-Post-Issuance:** | | | | |
| Certificate of Correction | 1811 | 1 | 100 | 100 |
| **Extension-of-Time:** | | | | |

| Description | Fee Code | Quantity | Amount | Sub-Total in USD($) |
|---|---|---|---|---|
| Miscellaneous: | | | | |
| | | Total in USD ($) | | 100 |

# Electronic Acknowledgement Receipt

| | |
|---|---|
| **EFS ID:** | 19641431 |
| **Application Number:** | 12639963 |
| **International Application Number:** | |
| **Confirmation Number:** | 7811 |
| **Title of Invention:** | WIRELESS ENERGY TRANSFER WITH HIGH-Q TO MORE THAN ONE DEVICE |
| **First Named Inventor/Applicant Name:** | John D. Joannopoulos |
| **Customer Number:** | 26161 |
| **Filer:** | Marc M. Wefers/Cheryl Forrest |
| **Filer Authorized By:** | Marc M. Wefers |
| **Attorney Docket Number:** | 01997-0359009 / MIT 11757 |
| **Receipt Date:** | 22-JUL-2014 |
| **Filing Date:** | 16-DEC-2009 |
| **Time Stamp:** | 08:58:46 |
| **Application Type:** | Utility under 35 USC 111(a) |

## Payment information:

| | |
|---|---|
| Submitted with Payment | yes |
| Payment Type | Deposit Account |
| Payment was successfully received in RAM | $100 |
| RAM confirmation Number | 8199 |
| Deposit Account | 061050 |
| Authorized User | |

## File Listing:

| Document Number | Document Description | File Name | File Size(Bytes)/ Message Digest | Multi Part /.zip | Pages (if appl.) |
|---|---|---|---|---|---|

| | | | | | |
|---|---|---|---|---|---|
| 1 | Request for Certificate of Correction | RequestforCOC.pdf | 112286<br>a86c5382a815126ee00a3517849 1dd4100b b1220 | no | 2 |
| **Warnings:** | | | | | |
| **Information:** | | | | | |
| 2 | Fee Worksheet (SB06) | fee-info.pdf | 30222<br>fe3e8ffe9cafcf095ba523b0a0f78977ce58b 0d | no | 2 |
| **Warnings:** | | | | | |
| **Information:** | | | | | |
| | | **Total Files Size (in bytes):** | 142508 | | |

**This Acknowledgement Receipt evidences receipt on the noted date by the USPTO of the indicated documents, characterized by the applicant, and including page counts, where applicable. It serves as evidence of receipt similar to a Post Card, as described in MPEP 503.**

**<u>New Applications Under 35 U.S.C. 111</u>**
**If a new application is being filed and the application includes the necessary components for a filing date (see 37 CFR 1.53(b)-(d) and MPEP 506), a Filing Receipt (37 CFR 1.54) will be issued in due course and the date shown on this Acknowledgement Receipt will establish the filing date of the application.**

**<u>National Stage of an International Application under 35 U.S.C. 371</u>**
**If a timely submission to enter the national stage of an international application is compliant with the conditions of 35 U.S.C. 371 and other applicable requirements a Form PCT/DO/EO/903 indicating acceptance of the application as a national stage submission under 35 U.S.C. 371 will be issued in addition to the Filing Receipt, in due course.**

**<u>New International Application Filed with the USPTO as a Receiving Office</u>**
**If a new international application is being filed and the international application includes the necessary components for an international filing date (see PCT Article 11 and MPEP 1810), a Notification of the International Application Number and of the International Filing Date (Form PCT/RO/105) will be issued in due course, subject to prescriptions concerning national security, and the date shown on this Acknowledgement Receipt will establish the international filing date of the application.**

UNITED STATES PATENT AND TRADEMARK OFFICE

# CERTIFICATE OF CORRECTION



PATENT NO. : 8,760,007 B2
APPLICATION NO. : 12/639963
DATED : June 24, 2014
INVENTOR(S) : John D. Joannopoulos, Aristeidis Karalis and Marin Soljacic

It is certified that error appears in the above-identified patent and that said Letters Patent is hereby corrected as shown below:

Title Page 1

Column 1, Item (56), (Other Publications), Line 1, delete "Artificail" and insert -- Artificial --

Column 1, Item (56), (Other Publications), Line 2, delete "Artificaial" and insert -- Artificial --

Title Page 4

Column 2, Item (56), (Other Publications), Line 1, delete "Transmisision" and insert -- Transmission --

Column 2, Item (56), (Other Publications), Line 2, delete "Lnks" and insert -- Links --

Title Page 5

Column 1, Item (56), (Other Publications), Line 46, delete "Reasonators" and insert -- Resonators --

Column 2, Item (56), (Other Publications), Line 46, delete "propogation" and insert -- propagation --

In the Claims

Column 12

Line 15, in Claim 1, delete "$\Gamma_2$" and insert -- $\Gamma_3$ --

Line 61, in Claim 14, delete "$\kappa/\sqrt{\Gamma_2\Gamma_2} > 0.5$" and insert -- $\kappa/\sqrt{\Gamma_1\Gamma_2} > 0.5$ --

Signed and Sealed this
Sixteenth Day of September, 2014

Michelle K. Lee

Michelle K. Lee
*Deputy Director of the United States Patent and Trademark Office*