IN THE UNITED STATES DISTRICT COURT
FOR THE DISTRICT OF DELAWARE

TIGO ENERGY INC., Plaintiff, v. SMA SOLAR TECHNOLOGY AMERICA LLC and SMA SOLAR TECHNOLOGY AG, Defendants.	Civil Action No. 22-915-GBW

Benjamin J. Schladweiler, Renée Mosley Delcollo, GREENBERG TRAURIG, LLP, Wilmington, Delaware; Nicholas Brown, GREENBERG TRAURIG, LLP, San Francisco, California; Jeffrey R. Colin, GREENBERG TRAURIG, LLP, New York, NY.

Counsel for Plaintiff

Adam W. Poff, Samantha G. Wilson, YOUNG CONAWAY STARGATT & TAYLOR, LLP, Wilmington, Delaware; Philip W. Marsh, ARNOLD & PORTER, Palo Alto, CA.

Counsel for Defendants

MEMORANDUM OPINION

December 4, 2023
Wilmington, Delaware

SMA Solar Technology America LLC
v. Tigo Energy Inc.
IPR2023-01184
Patent No. 8,823,218
Ex. 1024

GREGORY B. WILLIAMS
UNITED STATES DISTRICT JUDGE

Pending before the Court is the issue of claim construction of multiple terms in the following patents: U.S. Patent Nos. 8,823,218 (the "'218 Patent"), 8,933,321 (the "'321 Patent"), 9,584,021 (the "'021 Patent"), 9,966,848 (the "'848 Patent"), 10,256,770 (the "'770 Patent"), and 10,333,405 (the "'405 Patent") (collectively, the "Asserted Patents"). The Court has considered the parties' joint claim construction brief and accompanying authority, D.I. 80, and held a claim construction hearing on October 31, 2023 (the "Markman Hearing").

I. Background

A. '321 and '770 Patents

The '321 and '770 Patents (hereinafter, the "Rapid Shutdown Patents") disclose systems and methods that allow solar systems to shut down quickly in emergency situations. '321 Patent, Abstract; '770 Patent, Abstract, 16:41-45. To decide whether the solar system requires shutdown, the Rapid Shutdown Patents describe watchdog units that monitor communications between the solar system's central controller and local controller to ensure that communication signals are properly received. '321 Patent, 1:46-64. If an irregularity or change in a signal or communication is detected, the watchdog decides whether the system should be shut down entirely or whether system operations should be modified or reduced. *Id.*; *see also* '770 Patent, 2:40-56. The '770 Patent incorporates the earlier '321 Patent by reference. *See id.* at 1:7-37.

B. '021, '848, and '405 Patents

The '021, '848, and '405 Patents (hereinafter, the "Preloader Patents") disclose "preloader" circuits aimed to enhance the efficiency of photovoltaic systems by ensuring that the main electronics in the system are not turned on and used unless there is sufficient power supply

to maintain the system's operation. *See, e.g.*, '405 Patent. 2:44-61. Through this mechanism, the Preloader Patents attempt to prevent the "false start problem" which occurs in photovoltaic systems "in the early morning hours" when there is "faint blue light" that allows a photovoltaic panel to "generate a high voltage" but "as soon as the [system] becomes active there is a drop or brown out or power outage." '021 Patent, 8:4-14; 9:1-5. The Preloader Patents are related via priority claims and share a common specification.

II. LEGAL STANDARDS

A. Claim Construction

"'[T]he claims of a patent define the invention to which the patentee is entitled the right to exclude.'" *Phillips v. AWH Corp.*, 415 F.3d 1303, 1312 (Fed. Cir. 2005) (en banc) (citation omitted); *Aventis Pharms. Inc. v. Amino Chemicals Ltd.*, 715 F.3d 1363, 1373 (Fed. Cir. 2013) (same). "[T]here is no magic formula or catechism for conducting claim construction." *Phillips*, 415 F.3d at 1324. The Court is free to attach the appropriate weight to appropriate sources "in light of the statutes and policies that inform patent law." *Id.* The ultimate question of the proper construction of a patent is a question of law, although "subsidiary factfinding is sometimes necessary." *Teva Pharm. USA, Inc. v. Sandoz, Inc.*, 574 U.S. 318, 326–27 (2015); *see Markman v. Westview Instruments, Inc.*, 517 U.S. 370, 372 (1996) ("the construction of a patent . . . is exclusively within the province of the court.").

"The words of a claim are generally given their ordinary and customary meaning as understood by a person of ordinary skill in the art when read in the context of the specification and prosecution history." *Thorner v. Sony Comput. Entm't Am. LLC*, 669 F.3d 1362, 1365 (Fed. Cir. 2012) (citing *Phillips*, 415 F.3d at 1313); *Unwired Planet, LLC v. Apple Inc.*, 829 F.3d 1353, 1358 (Fed. Cir. 2016) (similar). The "'only two exceptions to this general rule'" are (1) when a patentee

defines a term or (2) disavowal of "'the full scope of a claim term either in the specification or during prosecution.'" *Thorner*, 669 F.3d at 1365 (citation omitted).

The Court "'first look[s] to, and primarily rel[ies] on, the intrinsic evidence,'" which includes the claims, written description, and prosecution history and "'is usually dispositive.'" *Personalized Media Commc'ns, LLC v. Apple Inc.*, 952 F.3d 1336, 1340 (Fed. Cir. 2020) (citation omitted). "[T]he specification ' . . . is the single best guide to the meaning of a disputed term.'" *Akzo Nobel Coatings, Inc. v. Dow Chem. Co.*, 811 F.3d 1334, 1340 (Fed. Cir. 2016) (citation omitted). "'[T]he specification may reveal a special definition given to a claim term by the patentee that differs from the meaning it would otherwise possess.' When the patentee acts as its own lexicographer, that definition governs." *Cont'l Cirs. LLC v. Intel Corp.*, 915 F.3d 788, 796 (Fed. Cir. 2019) (quoting *Phillips*, 415 F.3d at 1316). However, "'[the Court] do[es] not read limitations from the embodiments in the specification into the claims.'" *MasterMine Software, Inc. v. Microsoft Corp.*, 874 F.3d 1307, 1310 (Fed. Cir. 2017) (citation omitted)). The "written description . . . is not a substitute for, nor can it be used to rewrite, the chosen claim language." *SuperGuide Corp. v. DirecTV Enters., Inc.*, 358 F.3d 870, 875 (Fed. Cir. 2004).

The Court "should also consider the patent's prosecution history, if it is in evidence." *Markman v. Westview Instruments, Inc.*, 52 F.3d 967, 980 (Fed. Cir. 1995), *aff'd*, 517 U.S. 370; *Cont'l Cirs.*, 915 F.3d at 796 (same). The prosecution history may "'demonstrat[e] how the inventor understood the invention and whether the inventor limited the invention in the course of prosecution . . . ." *SpeedTrack, Inc. v. Amazon.com*, 998 F.3d 1373, 1377 (Fed. Cir. 2021) (quoting *Phillips*, 415 F.3d at 1317).

The Court may "need to look beyond the patent's intrinsic evidence and to consult extrinsic evidence in order to understand, for example, the background science or the meaning of a term in

the relevant art during the relevant time period." *Teva*, 574 U.S. at 331. "Extrinsic evidence consists of all evidence external to the patent and prosecution history, including expert and inventor testimony, dictionaries, and learned treatises." *Markman*, 52 F.3d at 980; *Phillips*, 415 F.3d at 1317 (same). Extrinsic evidence may be useful, but it is "less significant than the intrinsic record in determining the legally operative meaning of claim language." *Cont'l Cirs.*, 915 F.3d at 799 (internal quotation marks and citations omitted). However, "[p]atent documents are written for persons familiar with the relevant field . . . . Thus, resolution of any ambiguity arising from the claims and specification may be aided by extrinsic evidence of usage and meaning of a term in the context of the invention." *Verve, LLC v. Crane Cams, Inc.*, 311 F.3d 1116, 1119 (Fed. Cir. 2002); *see Nautilus, Inc. v. Biosig Instruments, Inc.*, 572 U.S. 898, 899 (2014) (explaining that patents are addressed "to those skilled in the relevant art").

III. AGREED-UPON TERMS

The parties agreed upon the construction of the following claim terms (D.I. 80 at 5-6):

A. The Rapid Shutdown Patents

Claim No.	Claim Term	Agreed-Upon Construction
'321 Patent, Claim 1	location controller	local controller
'321 Patent, Claims 1, 5	disconnect / disconnects / disconnecting	sever or terminate a connection, or reduce duty cycle / voltage to a safe level
'321 Patent, Claim 10	Shutdown	agreed: same meaning as disconnect
'770 Patent, Claim 12	Skips	The event of missing a communication or pulse
'770 Patent, Claims 12, 16	Heartbeat signals	Periodic signals
'770 Patent, Claim 14	When the anomaly includes a predetermined number of skips of the heartbeat signals	When the anomaly is a predetermined number of skips of the heartbeat signals[1]

[1] *See* D.I. 89.

B. The Preloader Patents

Claim No.	Claim Term	Agreed-Upon Construction
'021 Patent, Claim 1	Power supply . . . converts power	A power electronics circuit that converts one type or level of a voltage or current waveform to another
'021 Patent, Claims 10, 18; '848 Patent, Claims 1, 10; '405 Patent, Claims 1, 7, and 9	Power converter	A power electronics circuit that converts one type or level of a voltage or current waveform to another
'021 Patent, Claims 1-3. 10, 18; '848 Patent, Claims 1, 10; '405 Patent, Claims 1, 2, 4, 7-9, 11	First output	Plain and ordinary meaning
'021 Patent, Claims 1-3. 10, 18; '848 Patent, Claims 1, 10; '405 Patent, Claims 1, 2, 4, 7-9, 11	Second output	Plain and ordinary meaning
'021 Patent, Claim 18; '848 Patent, Claim 1	Coupled	In electrical connection with (direct or indirect)
'021 Patent, Claims 3-4. 10, 18, 20; '848 Patent, Claims 1, 10; '405 Patent, Claim 1	Signal(s)	Electronic communication(s)
'848 Patent, Claim 10; '405 Patent, Claim 9	Signaling	using an electronic signal to communicate

While the parties agree that the Court should adopt the plain and ordinary meaning of "first signal" and "second signal," they could not agree on what the plain and ordinary meaning is for either term. D.I. 80 at 6. For the reasons discussed in more detail below, see supra IV(B)(ii), the Court adopts SMA's position regarding the plain and ordinary meaning of "first stage" and "second stage." *Id.* Accordingly, the plain and ordinary meaning of "first output" is

"an output of a first stage device (e.g., a voltage or current waveform output by a first stage power converter)," and the plain and ordinary meaning of "second output" is "an output of a second stage device (e.g., a voltage or current waveform output by a second stage power converter)." *Id.* For all other undisputed terms highlighted above, the Court will adopt the parties' agreed-upon constructions.

IV. DISPUTED TERMS

A. The Rapid Shutdown Patents

i. The "skips" phrases (terms 1a-1c)

Disputed Term	Plaintiff Tigo's Construction	Defendants SMA's Construction	The Court's Construction
a time period longer than a predetermined number of allowed skips '321 Patent, Claims 1, 12	ordinary meaning; does not encompass zero skips	a time period longer than a specified number of skips that are allowed to happen and which define a specified time period	Plain and ordinary meaning; does not encompass zero skips
a predetermined number of skips '770 Patent, Claim 14	ordinary meaning; does not encompass zero skips	A specified number of skips that define a specified time period	Plain and ordinary meaning; does not encompass zero skips
skips...less than the predetermined number '770 Patent, Claim 15	ordinary meaning; does not encompass zero skips	a specified number of skips that define a specified time period	Plain and ordinary meaning; does not encompass zero skips

The parties agree that a "skip" is "the event of missing a communication or pulse." D.I. 80 at 10, 13. They dispute whether the terms "predetermined number of skips" ('321 Patent, Claims 1, 12) and "when the anomaly includes a predetermined number of skips of the heartbeat signals"

('770 Patent, Claim 14) can include zero skips. *Id.* at 9-13. The Court finds that the predetermined number of skips cannot encompass zero skips.

SMA maintains that the claim language supports its interpretation that the number of skips can be zero. *Id.* at 13-14. In support of this argument, SMA notes that nothing in the claim language limits the "number" of skips to a value greater than zero. *Id.* Rather, according to SMA, the Rapid Shutdown Patents merely require that the "number of skips" be "predetermined," meaning "decided ahead of time." *Id.* Since zero is in fact a number, SMA argues that any rule, authority, or permission that sets the number of skips to zero would satisfy the claim language. *Id.* at 13-14. Thus, SMA argues that, when the number of skips is preemptively set to zero, the controller would trigger shutdown immediately following even a single skip of the heartbeat signal. *Id.* at 19. For instance, with respect to Claims 1 and 12 of the '321 Patent, which require the signal to be lost for "a time period longer than a predetermined number of allowed skips" before shutdown is triggered, shutdown would result if the signal was lost for any time at all. *Id.*

Tigo disagrees with SMA's interpretation of the claim language. *Id.* at 11. In support of its argument that the claim language requires that the number of skips not be zero, Tigo notes that the '321 Patent discloses a predetermined number of "allowed skips." *Id.* According to Tigo, if the predetermined number of skips could be set to zero, no skips would be "allowed," thus rendering this language of the claim hollow. *Id.* at 11-12. As for the '770 Patent, Tigo argues that the '770 Patent looks for an "anomaly" in the heartbeat signal, which the parties agree means a predetermined number of skips. *Id.* If, Tigo contends, the number of skips is zero, then an "anomaly" would not exist, and any claim language requiring an anomaly could not be satisfied. *Id* at 12.

While SMA maintains that its construction of the "skips" terms is the only interpretation supported by the claim language, the Court finds that both parties have presented plausible constructions. *See id.* at 14. Thus, the Court must review the specification and the prosecution history of the Rapid Shutdown Patents to determine whether the intrinsic evidence supports either construction. Having done so, the Court finds that the "skip" terms do not encompass zero skips.[2]

1. *The specification confirms Tigo's interpretation.*

The '321 Patent specification, which is incorporated by reference into the '770 Patent, describes a controller capable of conducting system check operations after detecting a lost or irregular heartbeat signal. '321 Patent, Abstract; '770 Patent 1:7-37. The specification explains that system checks are conducted in order to verify that the heartbeat signal remains lost or irregular for some time before shutdown is initiated. '321 Patent at 7:37-55. Figure 4, annotated below, highlights this verification step:

[2] Tigo additionally contends that the PTAB constructed the "skip" terms during IPR, and Tigo argues that the Court should defer to the PTAB's construction of each term "until the appeals are resolved." D.I. 80 at 10-11. While SMA contends that deference is not appropriate, the Court need not resolve this issue, since the Court finds that the intrinsic evidence before the Court supports Tigo's interpretation of the "skip" terms.

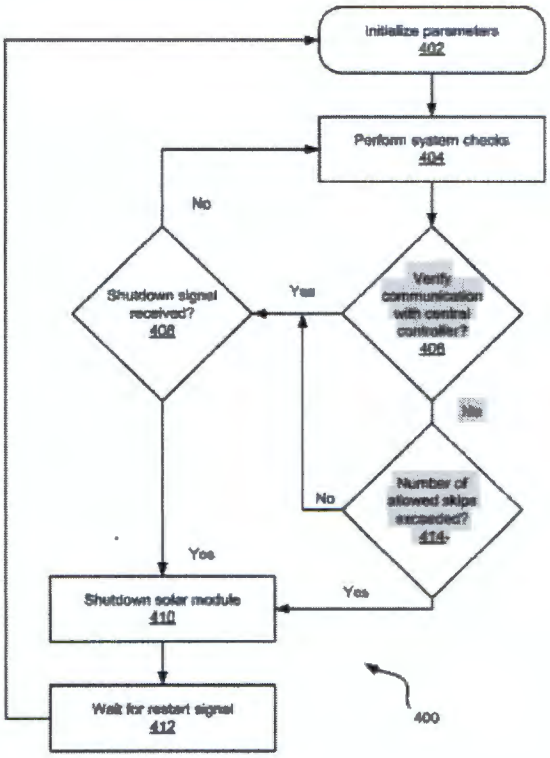

Figure 4

In describing Figure 4, the specification notes that:

> if communication with the central controller is not verified, then the method 400 waits to verify communication. If communication is verified in less than an allowed number of 'skips,' as determined by a number of allowed skips exceeded decision 414, then the method 400 looks for a shutdown signal in the shutdown decision 408. If communication is verified in less than an allowed number of "skips" as determined by a number of allowed skips exceeded decision 414, then the method 400 looks for a shutdown signal in the shutdown decision 408.

Id. at 7:56-62. While "skips" is defined in the specification as "the event of missing a communication or pulse," the '321 Patent specification further holds that the "predetermined number of skips" is a threshold. *See id.* at 9:36-42. Therefore, "[w]hen the threshold is surpassed (or number of skips exceeded) the method 400 moves to the shutdown and wait operations." *Id.* at 9:54-56. "However, if the threshold is not surpassed (e.g., communication with the central

controller is lost, but resumes before the threshold is surpassed)," then shutdown is avoided unless the controller receives a shutdown signal. *Id.* at 9:56-60.

By contrasting between situations where a shutdown is initiated because "the threshold is surpassed [because the] number of skips is exceeded[]" and situations where "communication with the central controller is lost, but resumes before the threshold is surpassed," the specification reveals that a "number of allowed skips" cannot be zero. *Id.* at 9:54-60. Rather, for the controller to conduct system checks as described in Figure 4, the system must, as Tigo argues, have "some tolerance for a lost signal." D.I. 80 at 12. If, however, no skips were permitted, the system would not allow for such a threshold, meaning that shutdown would initiate before any system checks could be conducted. *Id.* at 11-12. The Court agrees with Tigo that such a result would be contrary to the system check operation described in Figure 4 and would collapse the specification's distinction between situations where the signal is completely lost and situations where the signal returns before the threshold is surpassed. *Id.* Thus, the Court finds that SMA's interpretation of the "skips" terms is not supported by the specification.

2. *Tigo's Construction is further supported by the Prosecution History.*

Here, the '321 Patent's prosecution history includes an Office Action and a subsequent amendment of the claim terms. As Tigo highlights, its initial patent application claimed a controller that monitored the heartbeat signals to determine "whether the communication is interrupted." D.I. 80 at 12 (citing D.I. 56-6 at 2; D.I. 56-7 at 12). The claims did not require that the communication be interrupted for a "predetermined number of allowed skips." *Id.* However, the PTO examiner rejected the claims in an Office Action, finding that Tigo's invention was taught or suggested by the prior art, and in response, Tigo amended the '321 Patent to require that the communication be "interrupted for a time period longer than a predetermined number of allowed

skips." *Id.*; D.I. 56-6; D.I. 56-7 at 2. Following this amendment, the PTO approved Tigo's patent application. D.I. 80 at 12; D.I. 56-8 at 19 Of significance here is the examiner's Notice of Allowance which indicated that, "[n]otably, the structure requiring . . . the monitoring of a predetermined number of skips is not taught or suggested by the prior art in combination with the other claimed features." D.I. 80 at 12; D.I. 56-8 at 19 Thus, the PTO examiner expressly highlighted the disputed language, which indicates that the claims of the '321 Patent were allowed because of the amended language requiring the heartbeat signal to be "interrupted for a time period longer than a predetermined number of allowed skips."

Yet, as SMA admits, setting the number of skips to zero would mean that shutdown is initiated immediately after communication is interrupted. D.I. 80 at 16. Thus, where the number of permitted skips is zero, the amended claim limitation requiring that the lost signal continue "for a time period longer than a predetermined number of allowed skips" would be rendered meaningless. Tigo takes issue with this outcome, noting instead that the "predetermined number of allowed skips" limitation "was specifically added so that the claims required not merely determining whether a communication was 'interrupted,' but instead that it had been 'interrupted for a time period longer than a predetermined number of allowed skips.'" *Id.* at 12. The Court agrees. Notably, the PTO's Notice of Allowance reveals that the examiner relied on this limitation to distinguish the '321 Patent from the prior art, and the Court agrees that SMA's interpretation controverts the examiner's reasoning for issuing the '321 Patent.[3] Thus, the Court finds that the prosecution history supports Tigo's claim that the "skips" terms do not encompass zero skips.

[3] "The prosecution history can often inform the meaning of the claim language by demonstrating how the inventor understood the invention and whether the inventor limited the invention in the course of prosecution, making the claim scope narrower than it would otherwise be." *Extang Corp. Undercover, Inc.*, 2020 WL 6888277, at *2 (internal citations omitted).

Because SMA's proposed construction is unsupported by both the specification and the prosecution history, the Court finds that the "predetermined number of allowed skips" cannot be zero.

ii. "Photovoltaic Panel"

Disputed Term	Plaintiff Tigo's Construction	Defendants SMA's Construction	The Court's Construction
"photovoltaic panel" '770 Patent Claims 14-16	limiting preamble; ordinary meaning (photovoltaic panel is synonymous with PV panel and is colloquially referred to as a solar panel)	limiting preamble; Includes at least one or more solar cells that absorb photons and convert the photons into electrical energy (synonymous with PV panel, solar panel, and solar module.)	Limiting preamble; plain and ordinary meaning, which is "a device that contains at least one solar cell configured to convert photons into electrical energy (synonymous with PV panel, solar panel, and solar module)"

In construing "photovoltaic panel," Tigo and SMA agree that the preamble is limiting. D.I. 80 at 26. The parties similarly agree that "photovoltaic panel" is synonymous with "solar panel" and "solar module." *Id.* Their dispute seemingly lies in whether a "solar cell" is a "photovoltaic panel." *Id.* The Court finds that a "photovoltaic panel" must include at least one solar cell as a component; however, "solar cell" and "photovoltaic panel" are not synonymous terms.

The specification of the '321 Patent defines the terms "solar cell" and "solar module" as:

> A "**solar cell**" is a photovoltaic device configured to absorb photons and convert them into electrical energy.
>
> A "**solar module**" is a device that includes at least one or more solar cells, wherein the solar cells are connected in series or in parallel. The solar cells absorb photons and convert the photons into electrical energy.

'321 Patent, 3:61-65 (emphasis added). Because the parties agree that "solar module" and "photovoltaic panel" are synonymous, they also agree that the definition of "solar module" from the specification of the '321 Patent can be adopted to define a "photovoltaic panel." *See* D.I. 80

at 26-27. Relying on the '321 Patent, SMA additionally contends that "'solar cell' and 'solar module,' [] *are synonymous* with photovoltaic panel." *Id.* at 27 (emphasis added). Thus, according to SMA, "[p]utting these definitions together leads directly to [its] proposed construction for photovoltaic panel: 'Includes at least one or more solar cells that absorb photons and convert them into electrical energy.'" *Id.* at 27-28.

Tigo argues that SMA's construction fails because it requires the Court to find that a solar cell *is* a "photovoltaic panel." *See id.* at 30 ("contrary to SMA's argument, the specification does not say that 'a single solar cell' can be 'considered a panel.'"). Tigo notes that "saying that a photovoltaic panel is a 'device that includes at least one or more solar cells' does not imply that anything that includes a single solar cell is a photovoltaic panel." *Id.* at 29. For instance, "[a]n airplane is a device that includes one or more seats, but everything that has at least one seat is not an airplane." *Id.* To the extent that SMA argues that "solar cell" and "photovoltaic panel" are interchangeable terms, the Court agrees with Tigo. While the '770 Patent holds that a "solar module" must include one or more solar cells, this definition does not, as SMA contends, "define[] 'solar cell' and 'solar module'" as synonymous terms. *Id.* at 27. Rather, as depicted in Figure 1 of the '770 Patent, a "solar panel" or "solar module" requires at least one solar cell as a component part.

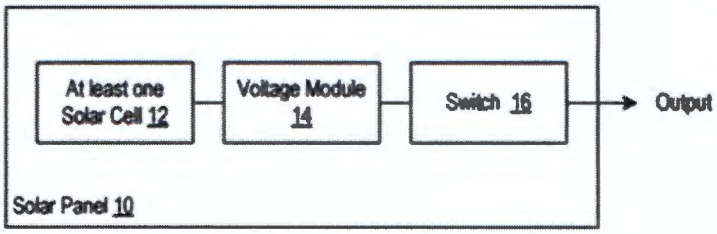

'770 Patent, Fig. 1.

In describing Figure 1, the specification notes that "a solar panel 10 (e.g., a photovoltaic panel) includes at least one solar cell 12 (e.g., a photovoltaic cell) to generate power when exposed to direct or diffuse light." 770 Patent, 4:5-13. The specification then explains that "in some cases" the solar module also includes other components like "a voltage module 14." *Id.* Critically, this language reveals that "includes," as used in the '770 Patent means that the solar panel contains the specified component as a part of the panel. While the specification notes that at least one solar cell is required, the solar panel or module may "include" or contain other components.

Accordingly, the Court finds that "photovoltaic panel" is "[a] device that contains at least one solar cell configured to convert photons into electrical energy (synonymous with PV panel, solar panel, and solar module)."

B. The Preloader Patents

i. "first stage" and "second stage"

Disputed Term	Plaintiff Tigo's Construction	Defendants SMA's Construction	The Court's Construction
"first stage" '021 Patent, Claim 1	Ordinary meaning	Indefinite	Plain and ordinary meaning, which means "the first set of one or more circuit components that operate alone or together to provide a specified function set forth in the claim."
"second stage" '021 Patent, Claim 1	Ordinary meaning	Indefinite	Plain and ordinary meaning, which means "the second set of one or more circuit components that operate alone or together to provide a specified function set forth in the claim."

The parties dispute whether the terms "first stage" and "second stage" as used in Claim 1 of the '021 Patent are indefinite. D.I. 80 at 33. SMA argues that the terms lack definiteness as they are used in Claim 1 because the claim language and specification provide "zero guidance . . . about what either a 'first stage' or a 'second stage' is." *Id.* at 34. Tigo disagrees and contends that each term can be readily understood by a person of ordinary skill in the art. *Id.* at 37.

"[A] patent is invalid for indefiniteness if its claims, read in light of the specification delineating the patent, and the prosecution history, fail to inform, with reasonable certainty, those skilled in the art about the scope of the invention." *Nautilus*, 572 U.S. at 901. While a "'potential infringer'" need not "'be able to determine ex ante if a particular act infringes the claims,'" the patentee must "apprise the public 'of what is still open to them[]'" such that "a person of ordinary skill in the art could determine whether or not an accused product or method infringes the claim." *Niazi Licensing Corp. v. St. Jude Med. S.C., Inc.*, 30 F.4th 1339, 1346-47 (Fed. Cir. 2022) (citations omitted).

Like claim construction, definiteness is a question of law, but the Court must sometimes render factual findings based on extrinsic evidence to resolve the ultimate issue of definiteness. *See Sonix Tech. Co. v. Publications Int'l, Ltd.*, 844 F.3d 1370, 1376 (Fed. Cir. 2017). When evaluating the definiteness of a patent claim, the Court must determine whether the patent "provide[s] enough certainty to one of skill in the art when read in the context of the invention." *Interval Licensing LLC v. AOL, Inc.*, 766 F.3d 1364, 1370 (Fed. Cir. 2014) (holding terms of degree are not inherently indefinite as long as claim language provides enough certainty to one of skill in art when read in context of invention). To assess whether a term of degree is "reasonably certain," the Court must look at the term itself and any description or examples provided in the intrinsic record. *See Exmark Mfg. Co. v. Briggs & Stratton Power Prods. Grp., LLC*, 879 F. 3d

1332, 1346-47 (Fed. Cir. 2018). The burden is on the challenging party to prove by clear and convincing evidence that the challenged language is indefinite. *Elm 3DS Innovations, LLC v. Samsung Elecs. Co.*, 2020 WL 1850657, at *6 (D. Del. Apr. 13, 2020). The Court finds that SMA has failed to meet this burden.

The terms "first stage" and "second stage" appear in Claims 1, 10, and 18 of the '021 Patent. Yet, SMA argues that the terms are indefinite only as they appear in Claim 1. D.I. 80 at 34. SMA distinguishes between the terms as used in Claim 1 and Claims 10 and 18, which SMA concedes are not indefinite, by noting that the latter two claims disclose "first stage power converters" and "second stage power converters." *Id.* at 35. Thus, according to SMA, "first stage" and "second stage" as used in Claims 10 and 18 "are adjectives used to *describe* power converters" while in Claim 1, the terms are used as nouns and disclose "components of the claimed power supply in Claim 1." *Id.*

Yet, the Court agrees with Tigo that this argument is "one of 'basic English grammar.'" *Id.* at 36. That is, SMA fails to explain why "first stage" and "second stage" are indefinite when used as nouns but not as adjectives. As Tigo notes, Claim 1 differs from Claims 10 and 18 merely in that it discloses a "first stage" and "second stage" that are housed in a single power converter. *Id.* Figure 6 is illustrative:

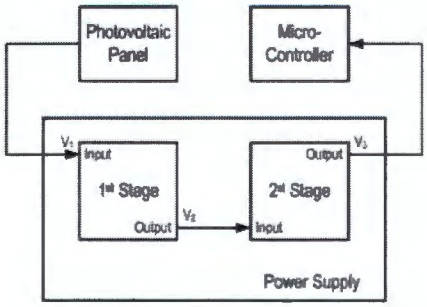

Figure 6

Despite this difference in configuration, Claim 1 describes "the same thing that is described in the other claims." D.I. 80 at 34. Claim 1, like Claims 10 and 18, discloses a "first stage" that converts a first input into a first output and a "second stage" that converts the first output into a second output. '021 Patent, Claim 1. Thus, the Court agrees with Tigo that, functionally, the power converters disclosed in Claims 1, 8, and 10 are the same.[4] D.I. 80 at 34. Given the parallel in function, the Court agrees with Tigo that the significance of SMA's distinction between the nouns used in Claim 1 and the adjectives used in Claims 10 and 18 is unclear. *Id.* at 36.

Moreover, SMA has the burden of proving indefiniteness and must do so with clear and convincing evidence. *Elm 3DS Innovations*, 2020 WL 1850657, at *6. SMA cannot meet its burden by arguing that the claim language and specification do not disclose "what either a 'first stage' or a 'second stage' is." *See* D.I. 80 at 41. According to Tigo, "stage" is a term of art. *Id.* at 37. Thus, Tigo contends that a POSITA would readily understand the meaning of "first stage" and "second stage" in Claim 1. *Id.* In support of this argument, Tigo notes that SMA made an identical argument during IPR when it explained that "stage" is "employed in the '021 patent consistent with its ordinary and common meaning":

> A PHOSITA understands a 'stage' to refer to a generic portion of an electrical circuit. In fact, among circuit engineers it is a common term of art in the field of electronics, and the term is employed in the '021 patent consistent with its ordinary and common meaning. . . . . Therefore, based on the ordinary and customary meaning of the terms, common usage in the art, and a consistent usage of the terms in the detailed description of the '021 patent, the term "stage" means "one or more circuit components" that operate alone or together to provide a specified function set forth in the claim.

[4] SMA seemingly concedes this point and notes that, like the "first stage power converters" and "second stage power converters" in Claims 10 and 18, the "first stage" and "second stage" disclosed in Claim 1 are "part of systems to supply power." D.I. 80 at 35.

Id. Tigo asks the Court to adopt the same definition of "stage" that SMA presented to the PTO. *Id.* In response, SMA notes that it was not permitted to argue indefiniteness during IPR. *Id.* at 58 n. 22. Even so, SMA makes no attempt to dispute Tigo's contention that "stage" is a term of art. Similarly, SMA provides no evidence that a POSITA could not interpret "first stage" and "second stage" as used in Claim 1.

Instead, during the Markman hearing, SMA argued that "first stage" and "second stage" were indefinite because the *jury* would be unable to determine "what is and is not part of the 'first stage' or the 'second stage.'" *See* October 31, 2023 Hearing Tr. at 100:8-101:8. The jury's interpretation of claim language, however, has no bearing on a definiteness challenge. Rather, a term is indefinite where the claim language, specification, and prosecution history fail to inform *those skilled in the art* about the scope of the invention with reasonable certainty. *Nautilus*, 572 U.S. at 901. Because SMA presented no evidence that "first stage" and "second stage" in Claim 1 have no meaning to a POSITA, the Court finds that SMA has not carried its burden of demonstrating that the terms are indefinite.

Therefore, the Court will apply the customary meaning of "stage" to both terms, i.e., "one or more circuit components that operate alone or together to provide a specified function set forth in the claim." Accordingly, "first stage" is "the first set of one or more circuit components that operate alone or together to provide a specified function set forth in the claim," and "second stage" is "the second set of one or more circuit components that operate alone or together to provide a specified function set forth in the claim."

ii. "Convert the First Output to a Second Output"

Disputed Term	Plaintiff Tigo's Construction	Defendants SMA's Construction	The Court's Construction
convert the first output to a second output '021 Patent, Claim 18	Ordinary meaning; convert one type or level of a voltage or current waveform (output A) to another (output B).	the operation of the second stage power converter to receive as an input a voltage or current waveform from the first stage power converter and to change it to another type or level of a voltage or current waveform	convert the first output, which is received as an input from the first stage power converter, into a second output

Claim 18 of the '021 Patent discloses "a second stage power converter connected to convert the first output to a second output." Tigo and SMA agree that a "power converter" is "a power electronics circuit that converts one type or level of a voltage or current waveform to another." D.I. 80 at 39. However, the parties dispute whether the term "convert" requires construction. *Id.* at 46. Additionally, the parties dispute whether "first" and "second" as used in the claim impose a temporal limitation. *Id.* at 39-41.

Tigo argues that SMA's construction removes the word "convert," and instead replaces it "with a lengthy phrase that confusingly repeats much of the agreed construction of 'power converter.'" *Id.* at 39. According to Tigo, in doing so, SMA improperly reads in a limitation requiring that the power converter be in "operation" and adds complexity to a term that is already clear. *Id.* The Court agrees. While SMA argues that Tigo's interpretation "repeat[s] the language of the claim in its proposed construction," the Court agrees with Tigo that "convert" requires no construction. *See id.* at 41. That is, "convert" has a clear meaning within the context of the claim, and a jury would be more likely to be confused by SMA's proposed construction than by the term itself.

As to the claim's use of the words "first" and "second," Tigo argues that "first" and "second" "are used in accordance with the common patent-law convention to distinguish between the different outputs" and do not in and of themselves impose a serial or temporal limitation. *Id.* In support of this argument, Tigo cites the Federal Circuit's decision in *3M Innovative Properties*, wherein the Court recognized that "first" and "second" are common patent law conventions used to "distinguish between repeated instances of an element or limitation." *Id.* (citing *3M Innovative Properties Co. v. Avery Dennison Corp.*, 350 F.3d 1365, 1372 (Fed. Cir. 2003)). According to Tigo, "first" and "second" as used in Claim 18 of the '021 Patent should be construed in line with the Federal Circuit's holding in *3M Innovative Properties*. *Id.*

Yet, as the Federal Circuit noted in *3M Innovative Properties*, terms must first be construed with reference to the patent's intrinsic evidence. 350 F.3d at 1372. The Federal Circuit in *3M Innovative Properties* held that the patent-at-issue employed "first" and "second" in line with their common patent law convention only after the Federal Circuit found that "[n]othing in the intrinsic evidence of the patent require[d] that a limitation of sequential creation of the 'multiple embossed pattern' should be included in [the] claim." *Id.* Here, as SMA notes, "first" and "second," appear numerous times in the '021 Patent and, in each instance, the terms are used to establish an order. D.I. 80 at 42; *see also* 021 Patent, Claim 1 ("A method to Supply power, the method comprising: providing a power Supply having a first stage and a second stage, wherein the first stage converts power from a direct current input into a first output, and the second stage powered by the first output has a second output for a micro-controller"); *Id.* at Fig. 6 (showing the first stage receiving a first input (V1) and generating an output (V2) which is then used by the second stage). Moreover, the '021 Patent's Abstract highlights as a key characteristic of the invention that "the output of the

first stage [is] turned on and stable for a period of time before the second stage is turned on to supply the power at the second voltage to the micro-controller." '021 Patent, Abstract.

Accordingly, the Court finds that "first" and "second" are used in Claim 18 of the '021 Patent to impose a temporal limitation. To clarify this temporal relationship between the two outputs, the Court interprets "convert the first output to a second output" to mean "convert the first output, which is received as an input from the first stage power converter, into a second output."

iii. Generating . . . a Second Output From the First Output

Disputed Term	Plaintiff Tigo's Construction	Defendants SMA's Construction	The Court's Construction
generating . . . a second output from the first output '405 Patent, Claim 7	Ordinary meaning, "generating output B from output A by a second stage power electronics circuit that converts one type or level of a voltage or current waveform (output A) to another (output B) and is connected to the first stage power converter."	providing, by means of a second stage power converter, a second output, in response to receiving a first output from a first stage power converter	providing, by means of a second stage power converter, a second output, in response to receiving a first output from a first stage power converter

Claim 7 of the '021 Patent recites "generating, by a second stage power converter connected to the first stage power converter, a second output from the first output from the first stage power converter." Tigo and SMA dispute whether "generating … a second output from the first output" implies that the generating of the second output is done "in response to receiving" the first output. D.I. 80 at 42-44.

The Court finds that the second output is generated in response to receiving the first output. As SMA highlights, the claim language and specification clearly hold that the second output is generated "from" the first output. D.I. 80 at 43 (citing ('405, Abstract; 1:53-60, Fig. 6, Claims 1, 7). The Court agrees with SMA that the term requires some construction to clarify that the first

output is generated by the first stage power converter. *Id.* As the Court has already noted, the use of "first" and "second" in the '405 Patent imply an order. *See infra* IV(B)(ii). That is, "the second output is generated from the first output and not the other way around." D.I. 80 at 45. The Court agrees that Tigo's proposed construction, which replaces "first" and "second" with "A" and "B" ignores this context. *Id.*

Tigo responds that SMA's construction incorrectly adds limitations by requiring that the second output be generated "in response to" receiving the first output. *Id.* at 42. In support of this argument, Tigo notes that "the control circuit blocks the second stage from powering the micro-controller until a condition is met." *Id.* at 44. However, Tigo's description of the control circuit is not inconsistent with SMA's construction.

That is, while Tigo is correct that the control circuit "blocks" the second stage, once a predetermined condition is met, ultimately the second stage receives the first output which it in turn uses to generate a second output. *See* '021 Patent, 8:41-48. Thus, the control unit highlighted by Tigo functions as a delay mechanism that prevents the second stage from accessing the first output for a period of time, but once the "threshold for the full delay period" is met, the control circuit allows the first output to be sent to the second stage. *Id.* Finally, in response to receiving the first output, the second stage is able to use that output as an input to generate the second output. *Id.* This is wholly consistent with SMA's construction which ultimately finds that the second output "is literally generated" in response to receiving the first output.

Ultimately, the Court agrees with SMA that "[a] POSITA would understand the second stage power converter generates the second output in response to receiving the first output from the first power converter." D.I. 80 at 43. Thus, the Court construes "generating . . . a second

output from the first output" to mean "providing, by means of a second stage power converter, a second output, in response to receiving a first output from a first stage power converter."

iv. "first/second stage power converter"

Disputed Term	Plaintiff Tigo's Construction	Defendants SMA's Construction	The Court's Construction
First stage power converter '021 Patent, Claim 10, 18; '848 Patent, Claim 1, 10; '405 Patent, Claim 1, 7, 9	Ordinary meaning	a power converter that is before the second stage power converter	a power converter that is temporally before the second stage power converter
second stage power converter '021 Patent, Claim 10, 18; '848 Patent, Claim 1, 10; '405 Patent, Claim 1, 7, 9	Ordinary meaning	a power converter that is after the first stage power converter, which receives as an input a voltage or current waveform from the first stage power converter	a power converter that is after the first stage power converter, which receives as an input a voltage or current waveform from the first stage power converter

Here again, the parties dispute whether the terms "first" and "second" are used to establish a temporal order. Tigo contends that the terms "first power converter" and "second power converter" require no interpretation since "the claim language in each claim already makes clear the relationship between the two power converter stages." D.I. 80 at 46. SMA, on the other hand, argues that the claims require the "first stage power converter" to come before the "second stage power converter;" thus, the terms should be construed to clarify the relationship between the two stages. *Id.* at 46-47.

As discussed above, the Court agrees with SMA that the terms "first" and "second" are used to establish an ordered relationship. *Id.* In other words, the terms "first" and "second" impose

a serial or temporal limitation and are not used merely to distinguish between two distinct power converters. This relationship is evident in Claim 10 of the '021 Patent which discloses a "first stage power converter [that is] configured to convert the direct current input into a first output . . . ," and "a second stage power converter [that is] configured to be powered by the first output to generate a second output . . . . " *Id.* at 46 (citing '021 Patent, Claim 10). For the second stage power converter to be "powered by the first," the second stage power converter must follow—or receive power "after"—the first stage power converter. *Id.* SMA contends that its constructions "add clarity in line with the claim language with respect to the relationship between the first stage and second stage power converters." *Id.* at 48-49. The Court agrees.

To illustrate the temporal relationship between the two converters, the Court will construe "first stage power converter" to mean "a power converter that is temporally before the second stage power converter" and "second stage power converter" to mean "a power converter that is after the first stage power converter, which receives as an input a voltage or current waveform from the first stage power converter."

v. "Consume" and "Consuming" terms

Claim Term	Plaintiff Tigo's Construction	Defendants SMA's Construction	The Court's Construction
Consume at least a portion of the first output '021 Patent, Claim 1, 10	Ordinary meaning	use at least some of the first output	Plain and ordinary meaning, which is "use up at least some of the first output"
Consume [the/a] portion of the first output '021 Patent, Claims 2, 20	Ordinary meaning	use at least some of the first output	Plain and ordinary meaning, which is "use up at least some of the first output"

Consuming . . . . a portion of the output '405 Patent, Claims 7, 10	Ordinary meaning	using at least some of the first output	Plain and ordinary meaning, which is "using up at least some of the first output"
Consuming the first output '405 Patent, Claim 1	Ordinary meaning	Using the first output	Plain and ordinary meaning, which is "using up the first output"
Not consuming the first output '405 Patent, Claim 1, 9	Ordinary meaning	Not using the first output	Plain and ordinary meaning, which is "not using up the first output"

The parties dispute whether the "consume" or "consuming" terms require construction. According to Tigo, they do not.

Rather, Tigo argues that each of the disputed "consume" or "consuming" limitations is straightforward, and thus Tigo contends that the Court should not replace "consume" and "portion" with words that have similar connotations. *Id.* at 49. SMA agrees that the terms are relatively clear and, like Tigo, asks the Court to adopt each limitation's plain and ordinary meaning. *Id.* at 50, 52. Accordingly, SMA contends that the plain and ordinary meaning of "consume" is "to use up,"[5] and the plain and ordinary meaning of "portion" is "a part of a whole." *Id.*

Having reviewed the relevant claims and other intrinsic evidence, the Court agrees that the "consume" or "consuming" terms should be assigned their plain and ordinary meanings.

[5] Tigo argued during the Hearing that the term "use" is found in other claims, thus evidencing that the terms "consume" and "use" were distinguishable. *See* October 31, 2023 Hearing Tr. at 94:3-95:2. However, this argument is contradicted by Tigo's own briefing wherein Tigo concedes that "consume" means "to use." D.I. 80 at 51 ("Various dictionaries define "consume" as "to destroy or expend by use; use up"14 "use up (a resource)"15 and "use up.").

Similarly, the Court agrees with SMA that "consume" means "use up" and "portion" means "some" or "part of the whole." Accordingly, "use" and "some" are included in the Court's construction of the plain and ordinary meaning of each "consume" or "consuming" limitation above.

vi. "power absorption circuit" and "switchable load"

Claim Term	Plaintiff Tigo's Construction	Defendants SMA's Construction	The Court's Construction
"power absorption circuit" '021 Patent, Claim 18; '848 Patent, Claims 1, 4, 10, 13; '405 Patent, Claim 7	Ordinary meaning; a circuit that absorbs power.	Indefinite	Not indefinite. Plain and ordinary meaning, which is "a circuit that absorbs power"
"switchable load" '021 Patent, Claims 1-4, 10, 20; '848 Patent, Claims 4, 13; '405 Patent, Claims 1, 4, 7, 9, 11	Ordinary meaning; a load that can be switched (e.g., on or off).	Indefinite	Not indefinite. Plain and ordinary meaning, which is "something that consumes electrical power and can be switched on or off"

The parties dispute whether two patent terms, "power absorption circuit" and "switchable load," are indefinite. Tigo contends that each term has a clear meaning when read in the context of the claims. D.I. 80 at 52. The Court agrees.

According to Tigo, a "power absorption circuit" is a circuit that absorbs power, and a "switchable load" is a load that can be switched on and off. *Id.* at 52-53. Finally, Tigo argues that "load" is a generic term used in the art to describe something that consumes electric power. *Id.* While SMA agrees with Tigo's definition of "load," SMA contends that both "power absorption circuit" and "switchable load" "are vague and do not appropriately inform a POSITA

of the scope of the claim." *Id.* at 54. SMA further contends that Tigo's constructions fail because they merely rearrange the claim words in a manner that "will not aid the Court or a jury in determining whether the claim language has been met." *Id.* at 58. The Court disagrees with SMA on both points.

First, the Court notes again that SMA has the burden to prove that each term is indefinite, meaning SMA must show that a POSITA would be unable to ascertain the scope of the terms in the context of the specifications and prosecution history. While SMA argues that "[n]either the specification nor the claims provide [any] guidance" for the disputed terms, this argument alone is not sufficient to meet its burden. *See id.* at 54. In fact, the Court finds that Tigo has presented evidence that the specification would provide a POSITA with guidance as to the meaning of each term.

For instance, Tigo argues that the "preload resistor" described in the specification is an example of both a "power absorption circuit" and a "switchable load." *Id.* at 52-53. According to Tigo, the specification explains that the resistor absorbs power ("Vbuck1") from the first power converter, and "[o]nce Vbuck1 is above a threshold for a period of time, 'the switch 404 and thus the preload resistor is turned off,' and the power is instead provided to a second power converter." *Id.* Tigo argues that Figure 4 of the '021 Patent illustrates this point:

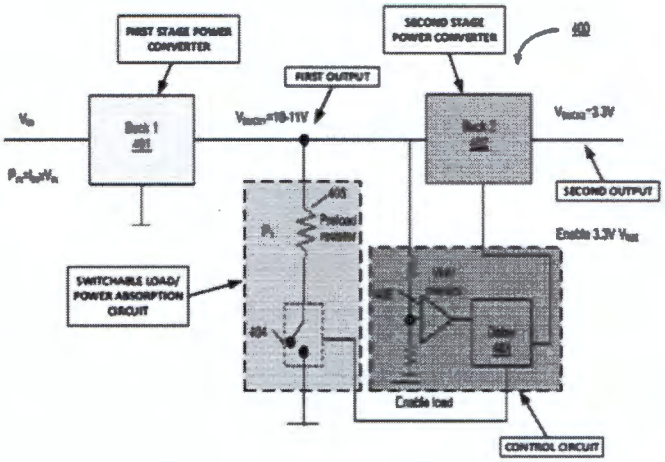

Figure 4

Id. at 56 (annotated Fig. 4). Tigo contends that a POSITA reading the specification would understand that, by converting heat, the preload resistor is absorbing power. *Id.* at 53. SMA counters this argument by noting that "preload resistor" does not define either term but provides "just an example" of a "power absorption circuit" and "switchable load." *Id.* at 58. Even so, the Court agrees with Tigo that a POSITA could use this example to guide its understanding of each term. For instance, a POSITA would reason from Figure 4 that a switchable load includes a switch (404) that can be switched to turn the load on or off. '021 Patent, Fig. 4. Given this context from the specification, the Court does not agree with SMA that the meaning or scope of "switchable load" and "absorption circuit" would be unclear to a POSITA.

Finally, the Court sees no issue with Tigo's proposed constructions for either term. SMA argues that Tigo's construction of "power absorption circuit" is unhelpful because it merely rearranges the claim words. *Id.* at 54-55. While the Court agrees that in some instances rearranging the words of a claim would provide little to no actual guidance on the claim's meaning, this is not the case here. Rather, here, the definition of a "power absorption circuit" is clear on its face, and the Court agrees with Tigo that the best construction for the term is its plain and ordinary meaning, which is a "circuit that absorbs power." *Id.* at 52. As for "switchable

load," the Court adopts the parties' agreed-upon definition of load, which is "something that consumes electrical power." *Id.* at 50 n. 21. Additionally, the Court finds that "switchable" means that the load can be turned on or off using a switch. *See* '021 Patent, 2:2-5. Thus, a "switchable load" means "something that consumes electrical power and can be switched on or off."

vii. "Control Circuit"

Claim Term	Plaintiff Tigo's Construction	Defendants SMA's Construction	The Court's Construction
"control circuit" '021 Patent, Claims 10, 18, 20; '848 Patent, Claims 1, 10; '405 Patent, Claims 1, 7, 9	Ordinary meaning	Original Proposed Construction: A circuit that controls operation of the switchable load and second stage power converter by monitoring the first output and signaling by providing input to the second stage power converter Revised Proposed Construction (In SMA America's Answering Claim Construction Brief): Indefinite	Not indefinite. Plain and ordinary meaning, which is "a circuit that provides control"

Here, again, the parties dispute whether "control circuit" is indefinite. Tigo argues that it is not and asks the Court to find that a "control circuit" is "a circuit that provides control." D.I. 80 at 59.

SMA argues that "control circuit" is indefinite since nothing in the specification and prosecution history "articulate what the claimed 'control circuit' is and what that term means." *Id.* at 60. The Court disagrees. As Tigo notes, each claim that discloses a "control circuit"

contains additional language that specifies how the "control circuit" is configured and how it functions. *Id.* at 60-61. Claim 18 of the '021 Patent notes for instance that the "control circuit" is "coupled with the first stage power converter and the second stage power converter" and is "powered by the first output ***to control*** the second stage power converter." '021 Patent, Claim 18. Claim 18 further explains how the "control circuit" exercises its control over the second stage power converter: the "control circuit" "monitors a voltage of the first output powering the power absorption circuit and signals the second stage power converter to continue disabling the providing of the second output to the micro-controller during a time period in which the voltage is below a threshold." *Id.* Claim 1 of the '405 Patent similarly describes a "control circuit" that, among other things, "block[s] the second stage power converter" from creating an output "before a predefined condition is met." '405 Patent, Claim 1. Thus, a POSITA could look to the claim language to determine what the claim means by "control circuit" in each instance.

Accordingly, SMA's indefinite argument fails. The Court agrees with Tigo that "control circuit" should receive its plain and ordinary meaning: a "circuit that provides control."

viii. "configured to block"

Claim Term	Plaintiff Tigo's Construction	Defendants SMA's Construction	The Court's Construction
"configured to block" '405 Patent, Claim 1	Ordinary meaning	Indefinite	Not indefinite. Plain and ordinary meaning, which means "designed to prevent"

Finally, Tigo and SMA dispute whether "configured to block" is indefinite. Tigo contends that the phrase is simple English and has a meaning that is apparent from Claim 1's language and the '405 Patent specification. *Id.* at 64. The Court agrees.

Claim 1 of the '405 Patent recites that "the control circuit is configured to block the second stage power converter from powering the micro-controller using the second output . . . before a predefined condition is met in the control circuit." '405 Patent, Claim 1. As Tigo explains, this function is necessary to prevent the "false start problem," which the specification notes "occurs when the solar panel is able to provide enough output voltage when it is not connected to the output, but not enough to sustain even a small current provided by the buck converter [] to the load." D.I. 80 at 64; '405 Patent, 8:31-34. The control circuit in Claim 1 thus prevents this "false start" by "blocking" the second circuit from producing an output until the condition is satisfied. The Court agrees with Tigo that the language is clear, and the term "configured to block" should receive its plain and ordinary meaning. D.I. 80 at 64.

Here, the Court finds that the plain meaning of the term "configured" as used throughout the '405 Patent means that the control circuit is "designed." The claim language notes that the control circuit is designed to "block," which the Court interprets as meaning to "prevent." Accordingly, the Court construes "configured to block" as "designed to prevent."

V. CONCLUSION

The Court will adopt the parties' agreed-upon constructions and construe the disputed claim terms as described above. The Court will issue an Order consistent with this Memorandum Opinion.