US008856045B1

(12) **United States Patent**
Patel et al.

(10) **Patent No.: US 8,856,045 B1**
(45) **Date of Patent: Oct. 7, 2014**

(54) **MOBILE-DEVICE-TO-MACHINE PAYMENT SYSTEMS**

(71) Applicant: **PayRange Inc.**, Portland, OR (US)

(72) Inventors: **Paresh K. Patel**, Portland, OR (US); **Chau M. Doan**, Beaverton, OR (US)

(73) Assignee: **PayRange Inc.**, Portland, OR (US)

(*) Notice: Subject to any disclaimer, the term of this patent is extended or adjusted under 35 U.S.C. 154(b) by 0 days.

(21) Appl. No.: **14/214,644**

(22) Filed: **Mar. 14, 2014**

Related U.S. Application Data

(63) Continuation-in-part of application No. 29/477,025, filed on Dec. 18, 2013.

(60) Provisional application No. 61/917,936, filed on Dec. 18, 2013.

(51) **Int. Cl.**

G06Q 99/00	(2006.01)
G06Q 20/40	(2012.01)
G06Q 20/32	(2012.01)
G06Q 20/38	(2012.01)

(52) **U.S. Cl.**
CPC ***G06Q 20/40*** (2013.01); ***G06Q 20/327*** (2013.01); ***G06Q 20/3829*** (2013.01); *G06Q 20/3823* (2013.01)
USPC **705/71**; 705/64; 705/76; 705/79

(58) **Field of Classification Search**
USPC 705/64, 71, 76, 79
See application file for complete search history.

(56) **References Cited**

U.S. PATENT DOCUMENTS

5,844,808	A	12/1998	Konsmo et al.	
6,462,644	B1	10/2002	Howell et al.	
6,584,309	B1	6/2003	Whigham	
7,085,556	B2	8/2006	Offer	
7,127,236	B2	10/2006	Khan et al.	
7,721,958	B2	5/2010	Belfer et al.	
7,848,980	B2 *	12/2010	Carlson	705/35
D669,899	S	10/2012	Cheng	
8,346,670	B2 *	1/2013	Hasson et al.	705/75
8,356,754	B2 *	1/2013	Johnson et al.	235/472.01
8,376,227	B2 *	2/2013	Hammad et al.	235/384
8,396,589	B2 *	3/2013	Katzenstein Garibaldi et al.	700/232
8,489,140	B2	7/2013	Weiner et al.	
8,517,766	B2	8/2013	Golko et al.	

(Continued)

FOREIGN PATENT DOCUMENTS

WO	WO2008/083022	7/2008
WO	WO2008/083025	7/2008

(Continued)

OTHER PUBLICATIONS

Madlmayr et al., "Near Field Communication based Mobile Payment System", Austrian Research Funding Agency, Project 811408, Mar. 6, 2008, 13 pages.*

(Continued)

Primary Examiner — James D Nigh
(74) *Attorney, Agent, or Firm* — Law Office of Karen Dana Oster, LLC

(57) **ABSTRACT**

Described herein is a mobile-device-to-machine payment system and method for facilitating a cashless transaction for purchase of at least one product or service by a user from a payment accepting unit.

26 Claims, 44 Drawing Sheets

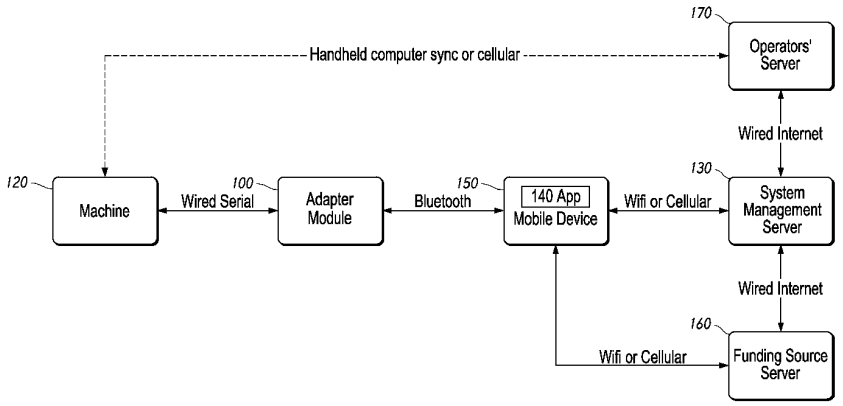

(56) **References Cited**

U.S. PATENT DOCUMENTS

8,596,528	B2 *	12/2013	Fernandes et al.	235/380
8,645,971	B2	2/2014	Carlson et al.	
2004/0049454	A1 *	3/2004	Kanno et al.	705/39
2008/0033880	A1 *	2/2008	Fiebiger et al.	705/44
2008/0154727	A1	6/2008	Carlson	
2008/0154735	A1	6/2008	Carlson	
2008/0167991	A1	7/2008	Carlson et al.	
2008/0183480	A1	7/2008	Carlson et al.	
2008/0201226	A1	8/2008	Carlson et al.	
2008/0255947	A1 *	10/2008	Friedman	705/14
2009/0119190	A1 *	5/2009	Realini	705/30
2009/0327089	A1 *	12/2009	Kanno et al.	705/21
2011/0040686	A1 *	2/2011	Carlson	705/44
2011/0153436	A1	6/2011	Krampe	
2011/0153442	A1	6/2011	Krampe	
2011/0251910	A1 *	10/2011	Dimmick	705/17
2012/0078735	A1 *	3/2012	Bauer et al.	705/16
2012/0231844	A1 *	9/2012	Coppinger	455/558
2012/0303528	A1 *	11/2012	Weiner et al.	705/44
2013/0267121	A1	10/2013	Hsu	
2014/0040028	A1 *	2/2014	King et al.	705/14.53
2014/0040117	A1 *	2/2014	Jain	705/39

FOREIGN PATENT DOCUMENTS

WO	WO2008/083078		7/2008	
WO	WO2008/083089		7/2008	
WO	WO2008/083105		7/2008	
WO	WO2008/083115		7/2008	
WO	WO2008/083119		7/2008	
WO	WO2013/177416	A2 *	11/2013	G06Q 20/32

OTHER PUBLICATIONS

Bing, Bing Images Search: "dongle," Dec. 5, 2013, http://www.bing.com/images/search?q=dongle&FORM=HDRSC2, 8 pages.

Google, Chromecast, http://www.google.com/intl/en/chrome/devices/chromecast/, Dec. 12, 2013, 4 pages.

U.S. Appl. No. 60/871,898, Value Based Offers, inventor Mark Carlson, filed Dec. 26, 2006, US Patent and Trademark Office, 169 pages.

* cited by examiner

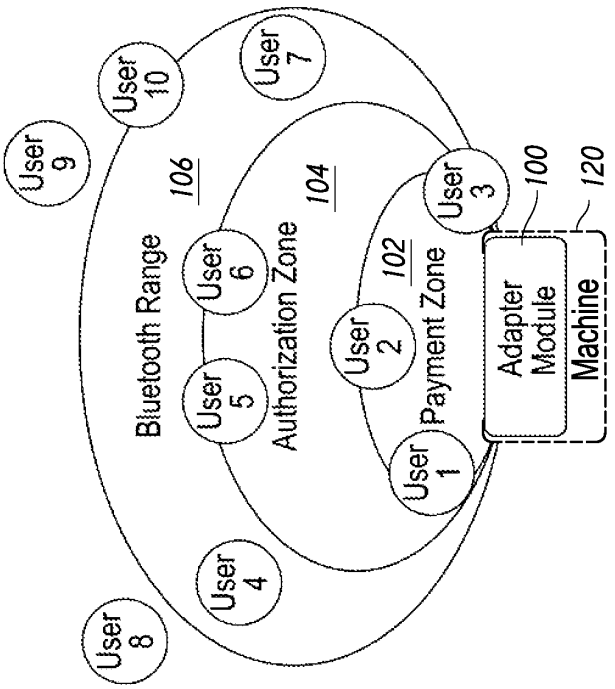
User 9
User 10
User 7
106
104
Bluetooth Range
User 6
Authorization Zone
User 5
User 2
102
Payment Zone
User 3
User 1
User 4
User 8
100
120
Adapter Module
Machine

FIG. 2

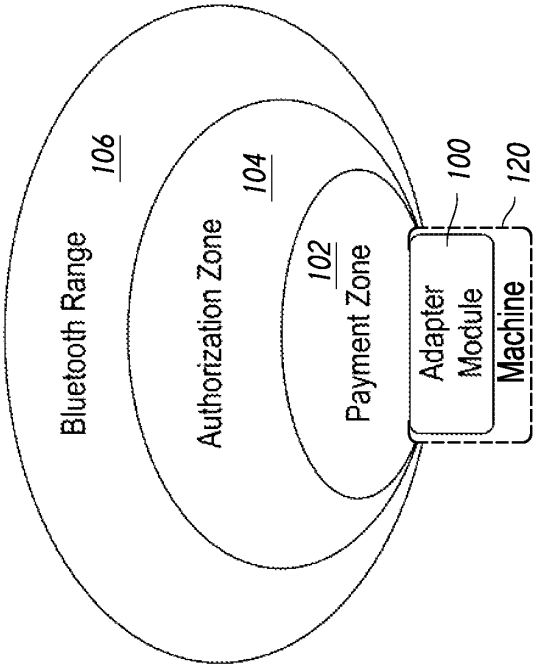
106
Bluetooth Range
104
Authorization Zone
102
Payment Zone
100
120
Adapter Module
Machine

FIG. 1

Tab	Favorite?	Alert	View to User
All	Yes	No	User can make Hands-free Credit with the connected vending machine
All	No	Yes	User needs to launch Mobile Device and then swipe to make transaction manually
Favorite	Yes	No	Hands-free transction will be available to the user via vending machine
Favorite	No	No	User is not alerted for the vending machine which is not a favorite machine. Hands-free mode will not work, manual swipe for transaction required by user.
Either All or Favorite	Yes	Yes	BUT Hands-free Credit is not available (disabled by module, expired AuthGrant, insufficient balance, or other issue), then user will get an alert so that user can swipe credit manually.

FIG. 3

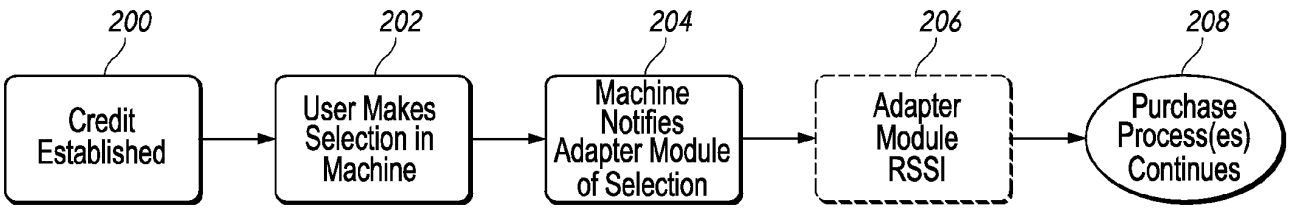

FIG. 4

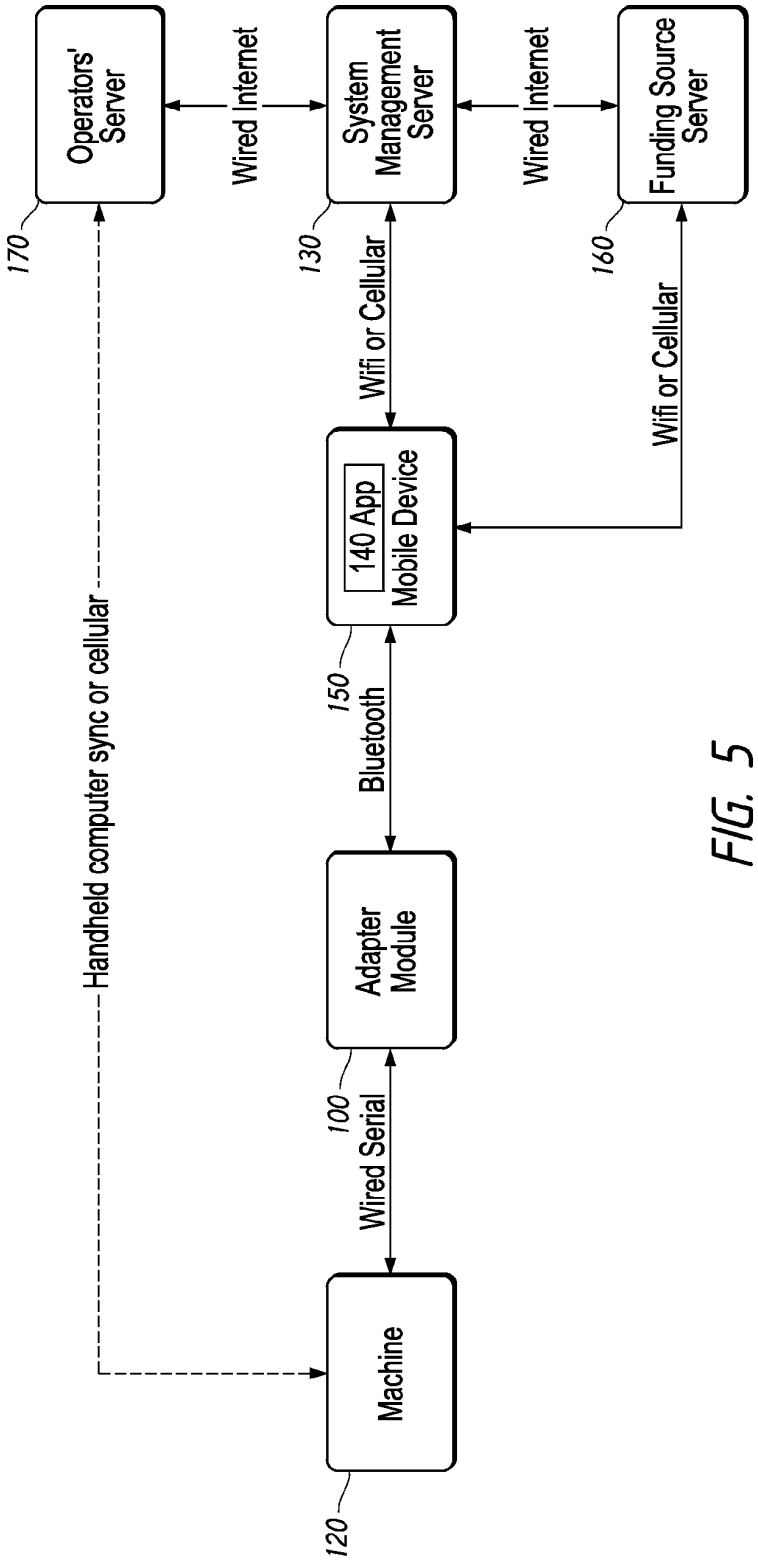
Operators' Server
170
Wired Internet
System Management Server
130
Wired Internet
Funding Source Server
160
Handheld computer sync or cellular
Wifi or Cellular
Wifi or Cellular
140 App
Mobile Device
150
Bluetooth
Adapter Module
100
Wired Serial
Machine
120

FIG. 5

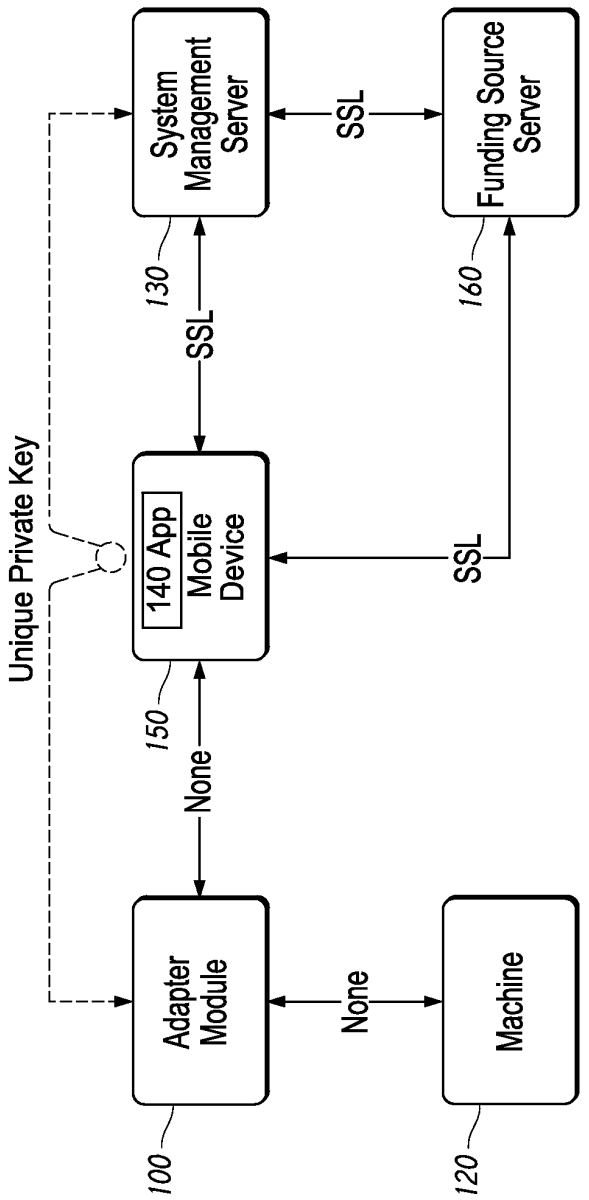
Unique Private Key
System Management Server
130
SSL
Funding Source Server
160
140 App
Mobile Device
150
SSL
None
Adapter Module
100
None
Machine
120

FIG. 6

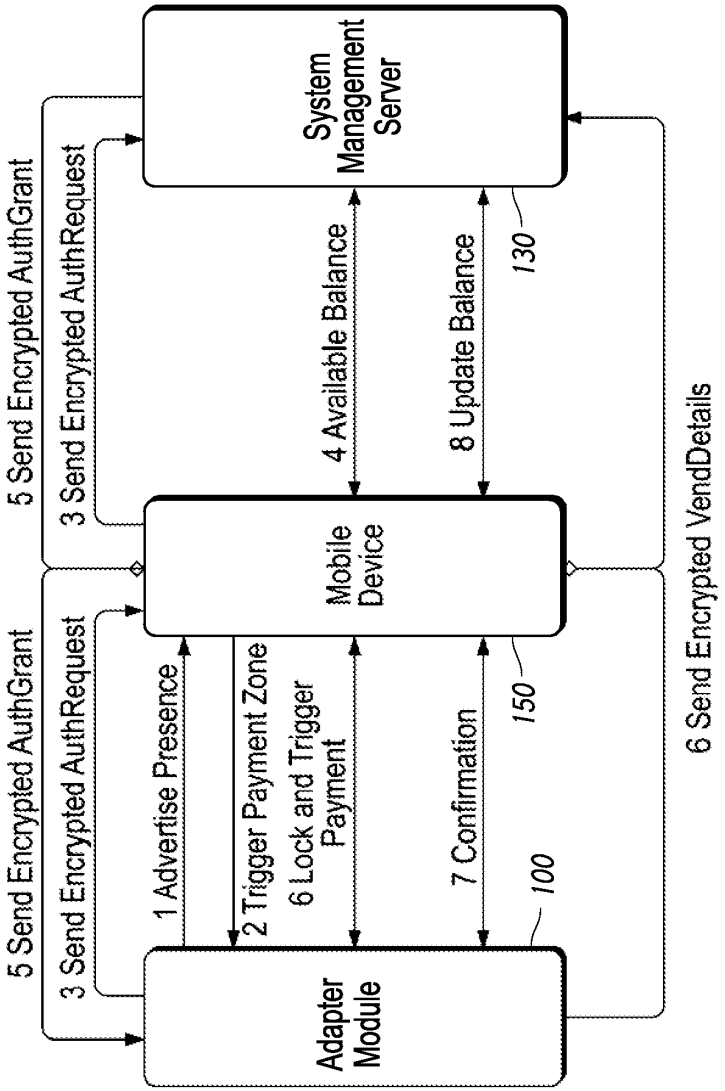
System Management Server
Mobile Device
Adapter Module
5 Send Encrypted AuthGrant
3 Send Encrypted AuthRequest
5 Send Encrypted AuthGrant
3 Send Encrypted AuthRequest
1 Advertise Presence
2 Trigger Payment Zone
6 Lock and Trigger Payment
7 Confirmation
4 Available Balance
8 Update Balance
6 Send Encrypted VendDetails
130
150
100

FIG. 7

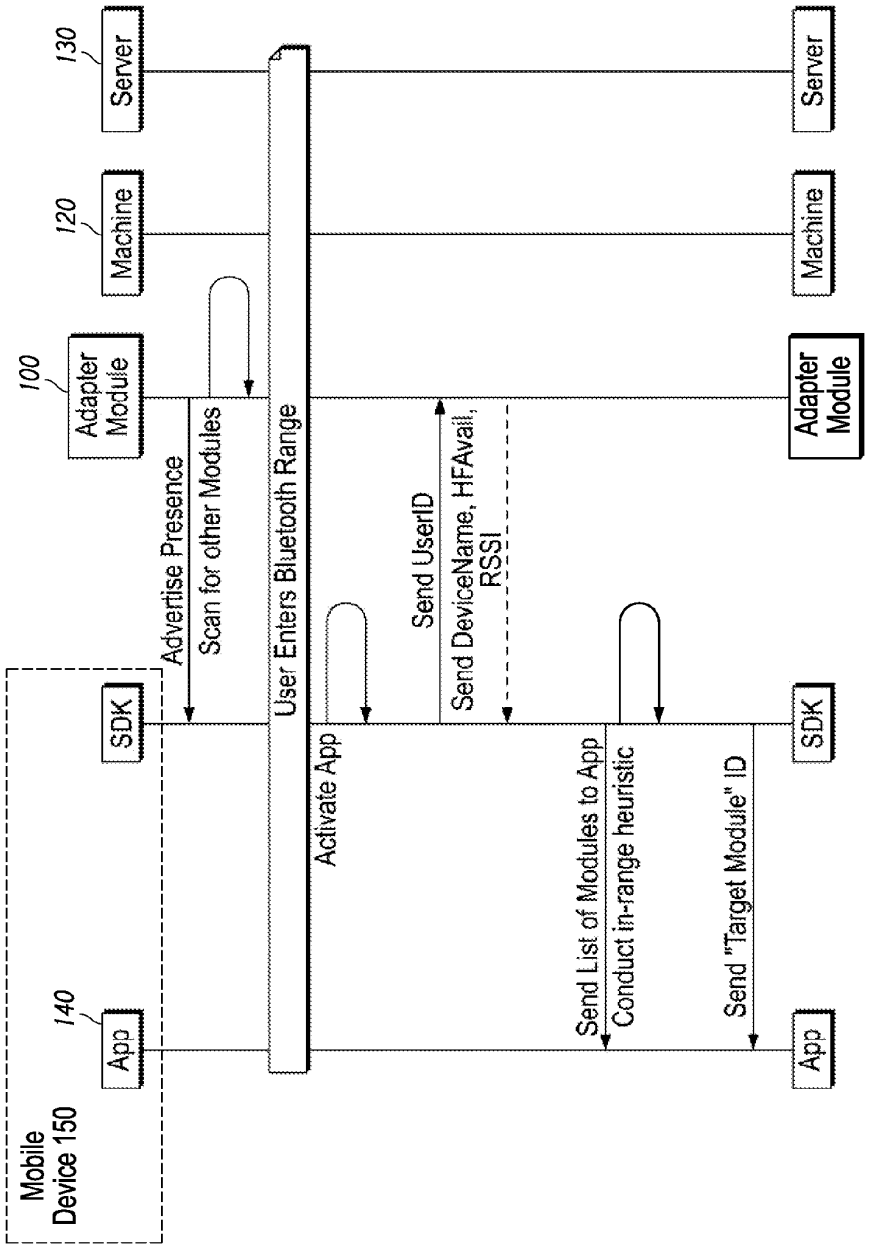
Mobile Device 150
140
App
SDK
100
Adapter Module
120
Machine
130
Server
Advertise Presence
Scan for other Modules
User Enters Bluetooth Range
Activate App
Send UserID
Send DeviceName, HFAvail, RSSI
Send List of Modules to App
Conduct in-range heuristic
Send "Target Module" ID
App
SDK
Adapter Module
Machine
Server

FIG. 8A

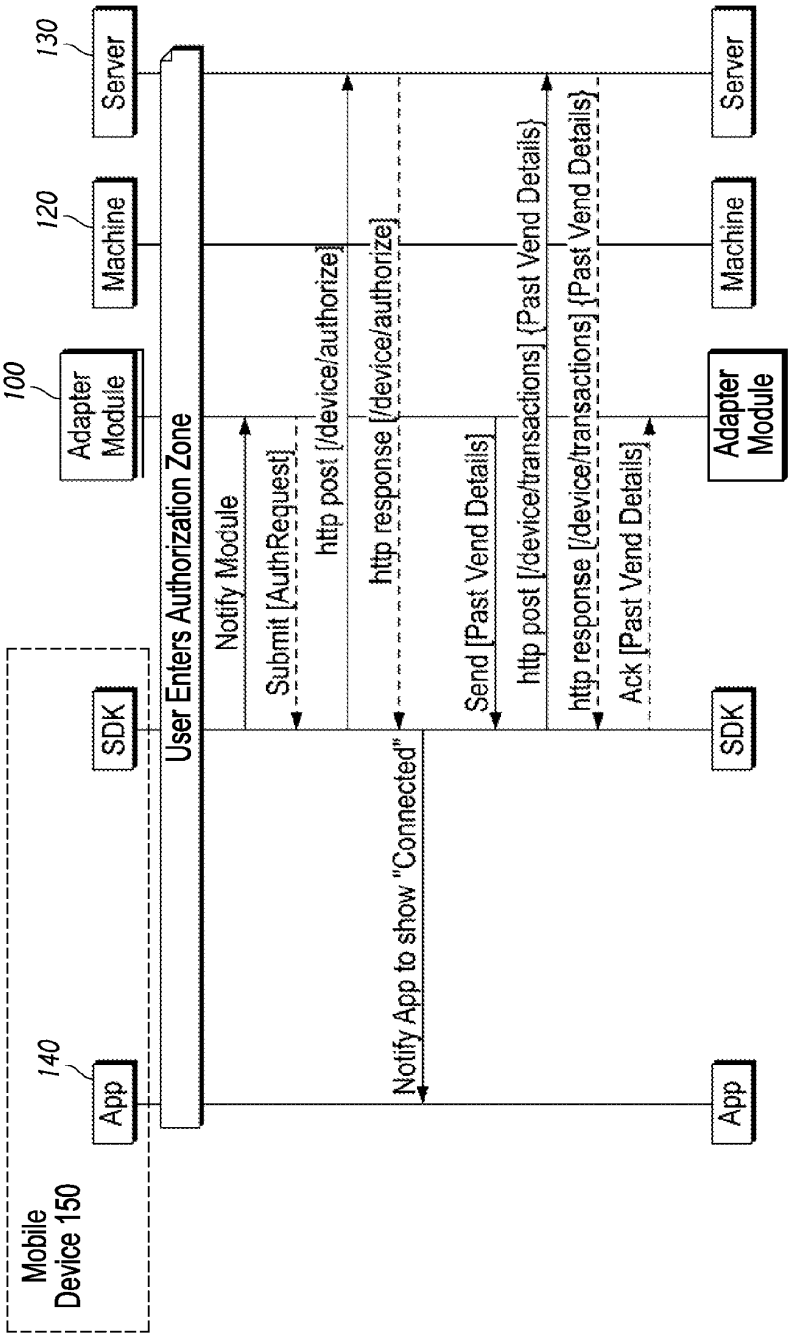
Mobile Device 150
140
App
SDK
100
Adapter Module
120
Machine
130
Server
User Enters Authorization Zone
Notify Module
Submit [AuthRequest]
http post [/device/authorize]
http response [/device/authorize]
Send [Past Vend Details]
http post [/device/transactions] {Past Vend Details}
http response [/device/transactions] {Past Vend Details}
Ack [Past Vend Details]
Notify App to show "Connected"
App
SDK
Adapter Module
Machine
Server

FIG. 8B

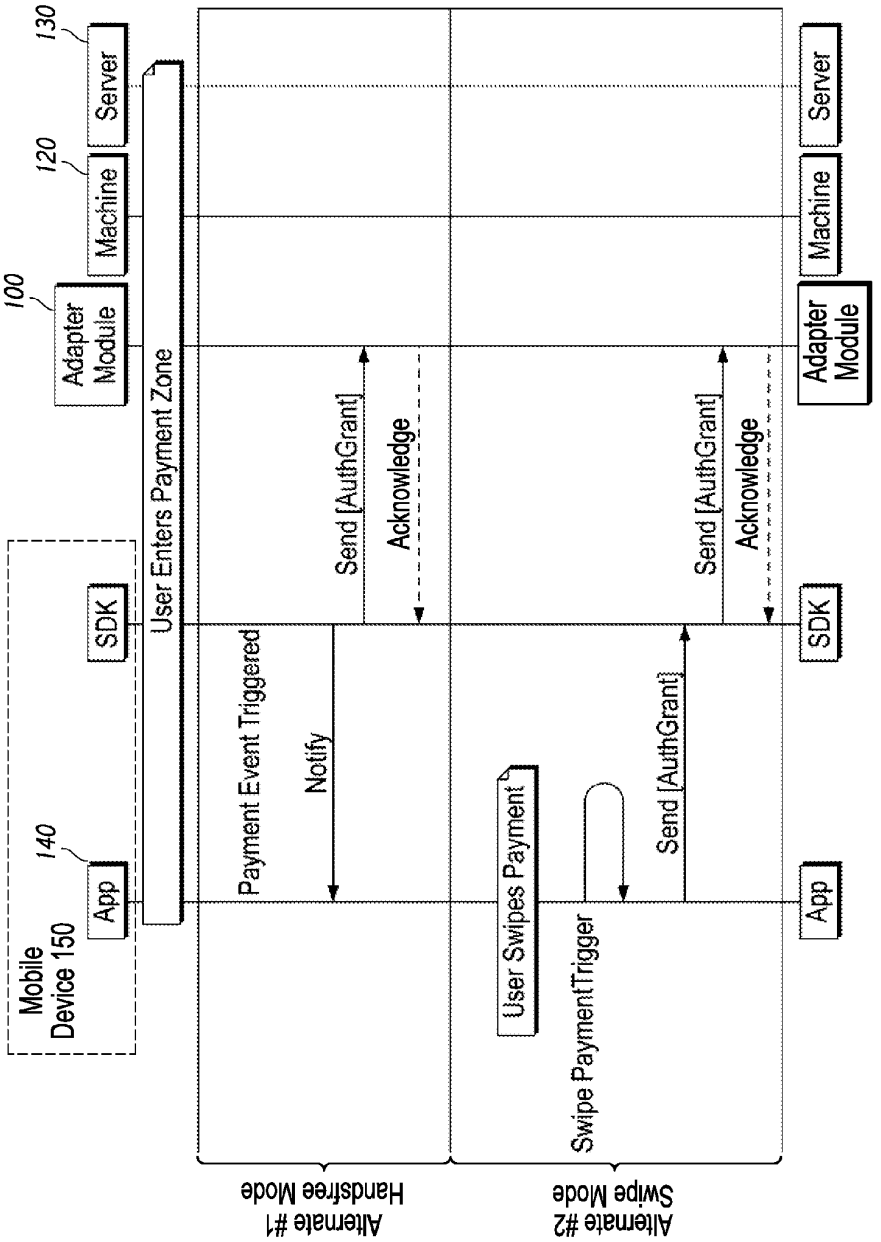
Mobile Device 150
140
App
SDK
User Enters Payment Zone
100
Adapter Module
120
Machine
130
Server
Payment Event Triggered
Notify
Send [AuthGrant]
Acknowledge
Alternate #1 Handsfree Mode
User Swipes Payment
Swipe PaymentTrigger
Send [AuthGrant]
Send [AuthGrant]
Acknowledge
Alternate #2 Swipe Mode
App
SDK
Adapter Module
Machine
Server

FIG. 8C

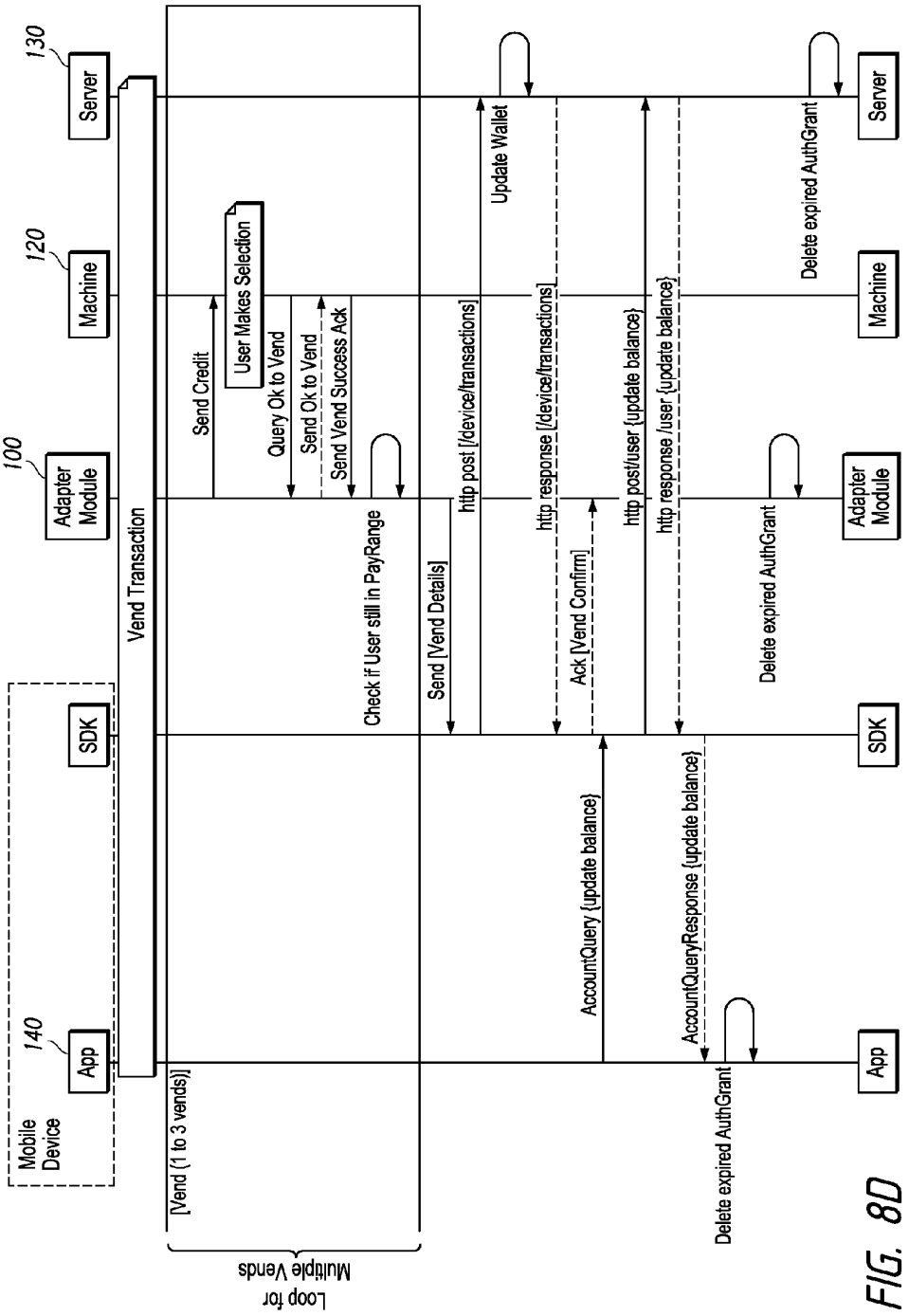
Mobile Device
140
App
SDK
100
Adapter Module
120
Machine
130
Server
Vend Transaction
[Vend (1 to 3 vends)]
Loop for Multiple Vends
Send Credit
User Makes Selection
Query Ok to Vend
Send Ok to Vend
Send Vend Success Ack
Check if User still in PayRange
Send [Vend Details]
http post [/device/transactions]
Update Wallet
http response [/device/transactions]
Ack [Vend Confirm]
http post/user {update balance}
AccountQuery {update balance}
http response /user {update balance}
AccountQueryResponse {update balance}
Delete expired AuthGrant
Delete expired AuthGrant
Delete expired AuthGrant
App
SDK
Adapter Module
Machine
Server

FIG. 8D

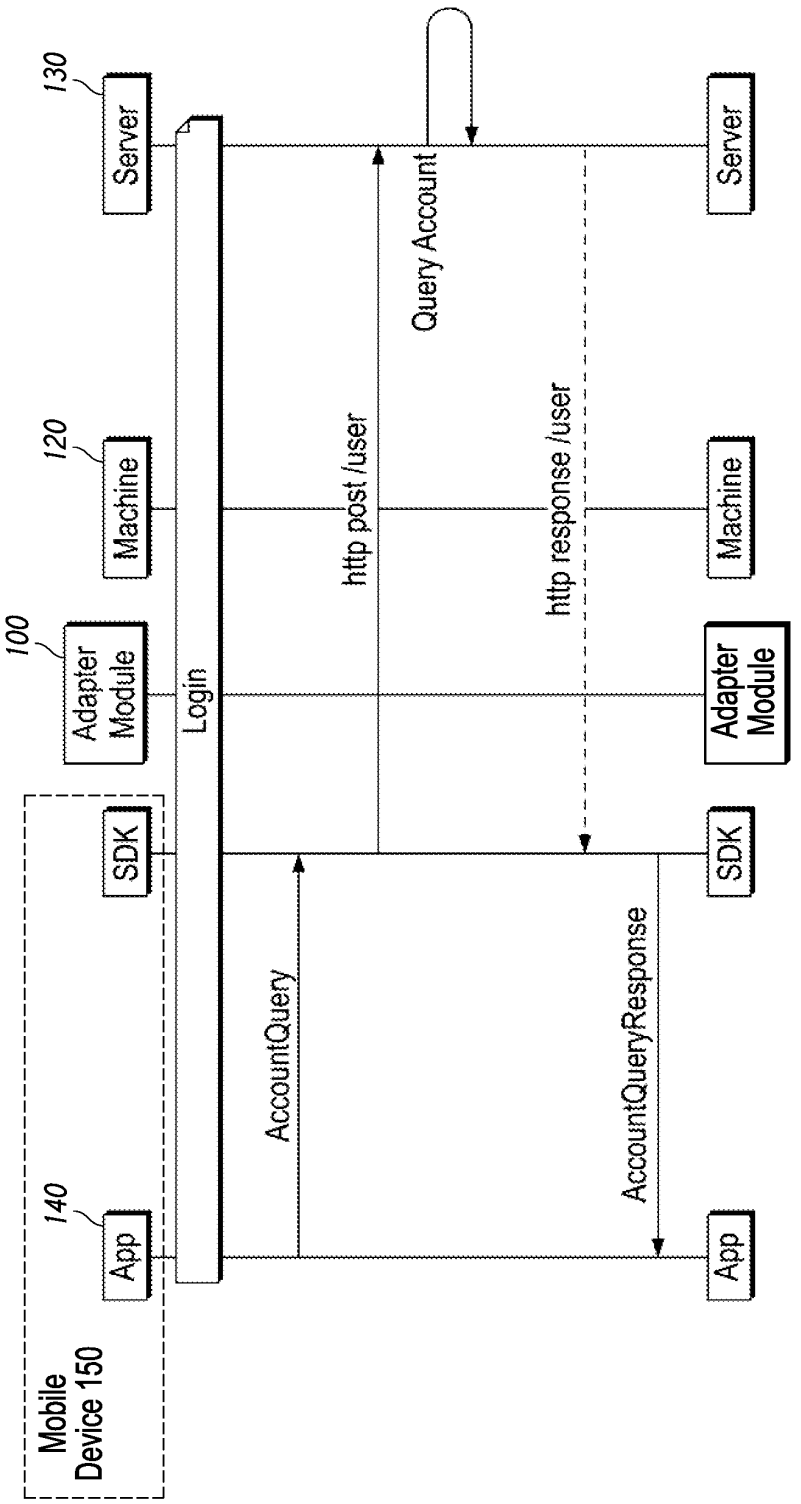
Mobile Device 150
140
App
SDK
100
Adapter Module
120
Machine
130
Server
Login
AccountQuery
http post /user
Query Account
AccountQueryResponse
http response /user
App
SDK
Adapter Module
Machine
Server

FIG. 8E

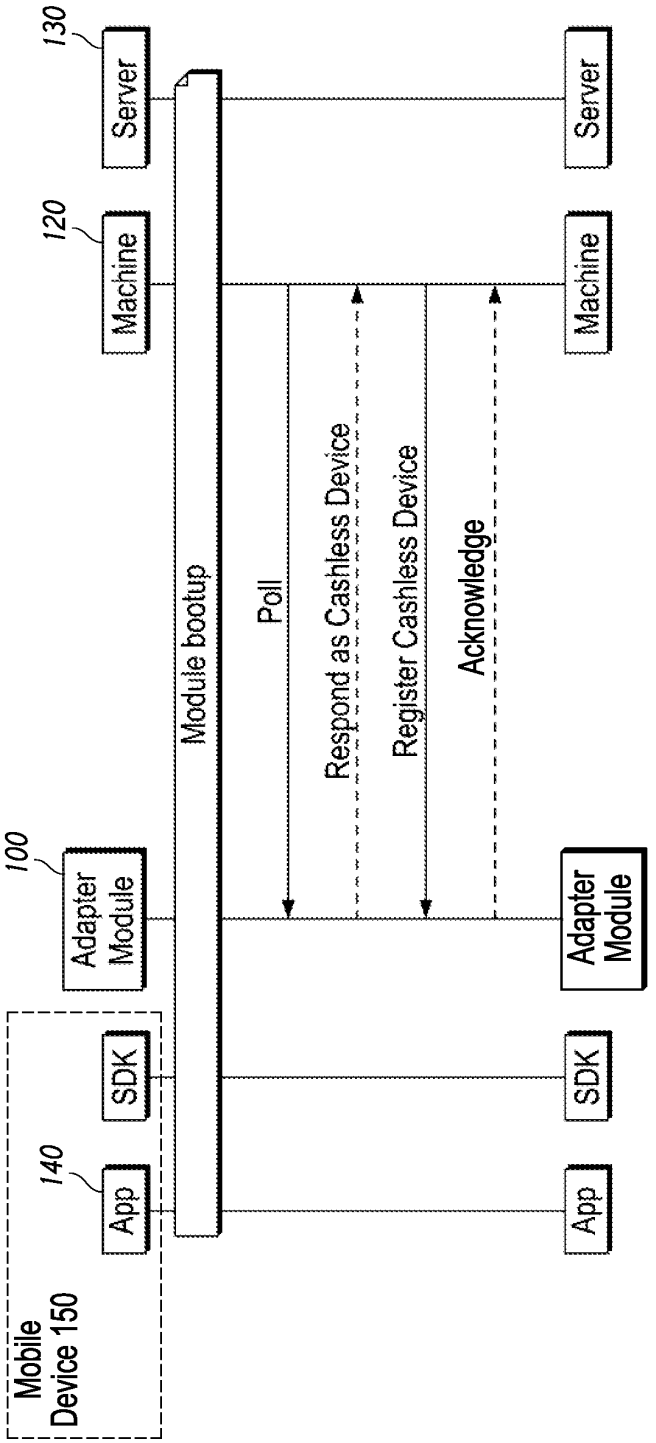
130
Server
120
Machine
100
Adapter Module
SDK
140
App
Mobile Device 150
Module bootup
Poll
Respond as Cashless Device
Register Cashless Device
Acknowledge
Server
Machine
Adapter Module
SDK
App

FIG. 8F

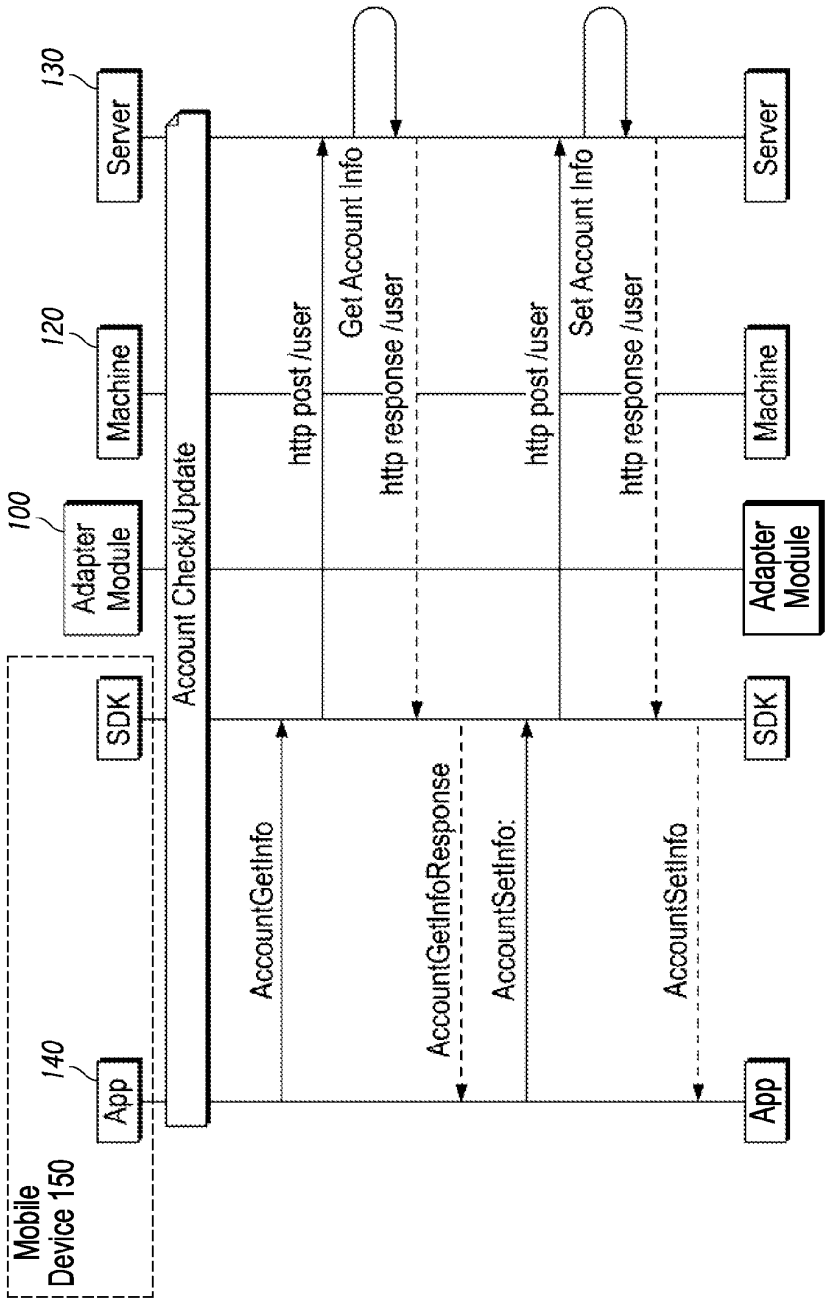
Mobile Device 150
140
App
SDK
100
Adapter Module
120
Machine
130
Server
Account Check/Update
AccountGetInfo
http post /user
Get Account Info
http response /user
AccountGetInfoResponse
AccountSetInfo:
http post /user
Set Account Info
http response /user
AccountSetInfo
App
SDK
Adapter Module
Machine
Server

FIG. 8G

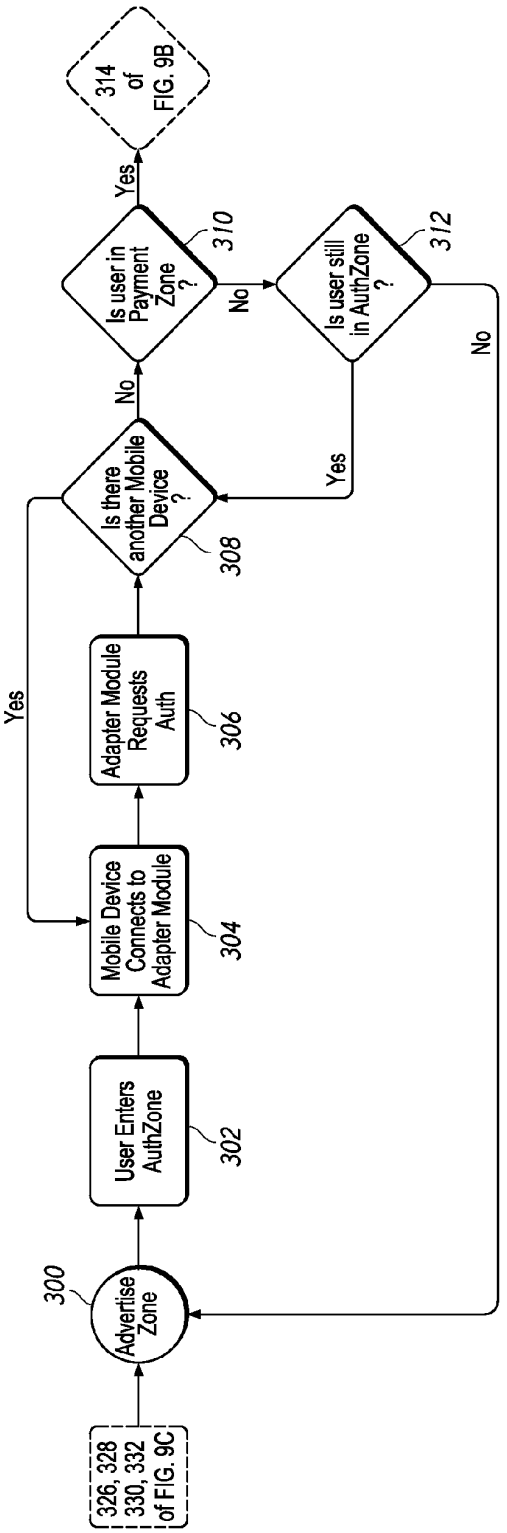
326, 328
330, 332
of FIG. 9C
300
Advertise Zone
User Enters AuthZone
302
Mobile Device Connects to Adapter Module
304
Adapter Module Requests Auth
306
Is there another Mobile Device ?
308
Yes
No
Is user in Payment Zone ?
310
Yes
314 of FIG. 9B
No
Is user still in AuthZone ?
312
Yes
No

FIG. 9A

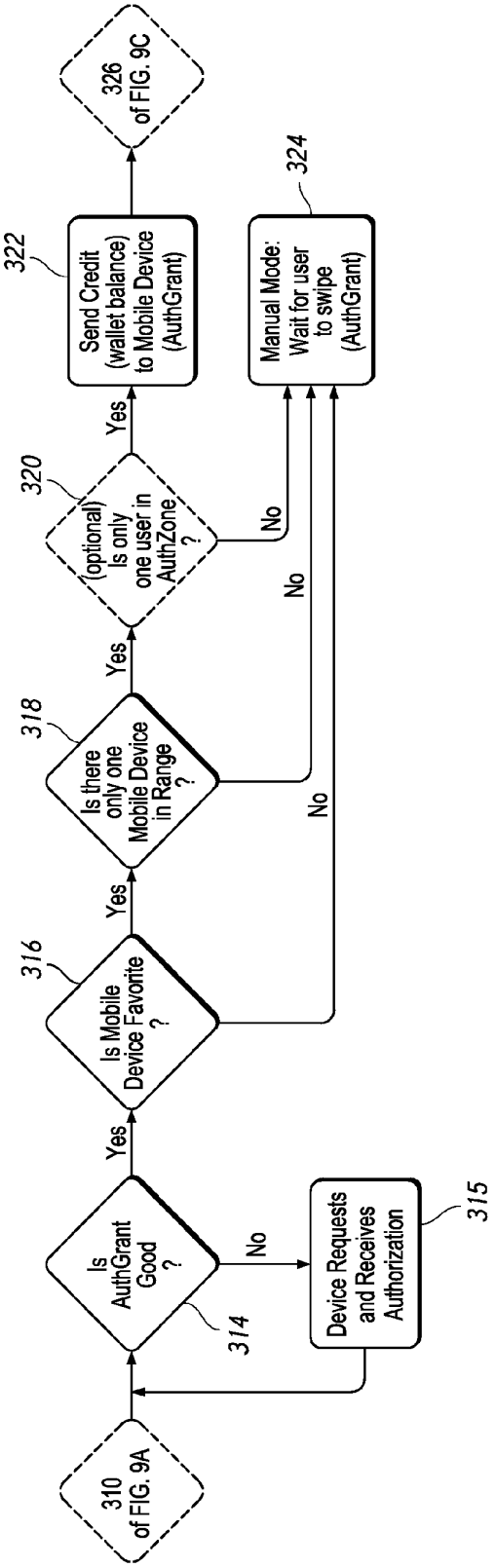
310 of FIG. 9A
Is AuthGrant Good ?
314
Yes
No
Device Requests and Receives Authorization
315
Is Mobile Device Favorite ?
316
Yes
Is there only one Mobile Device in Range ?
318
Yes
No
No
(optional) Is only one user in AuthZone ?
320
Yes
No
Send Credit (wallet balance) to Mobile Device (AuthGrant)
322
Manual Mode: Wait for user to swipe (AuthGrant)
324
326 of FIG. 9C

FIG. 9B

FIG. 9C

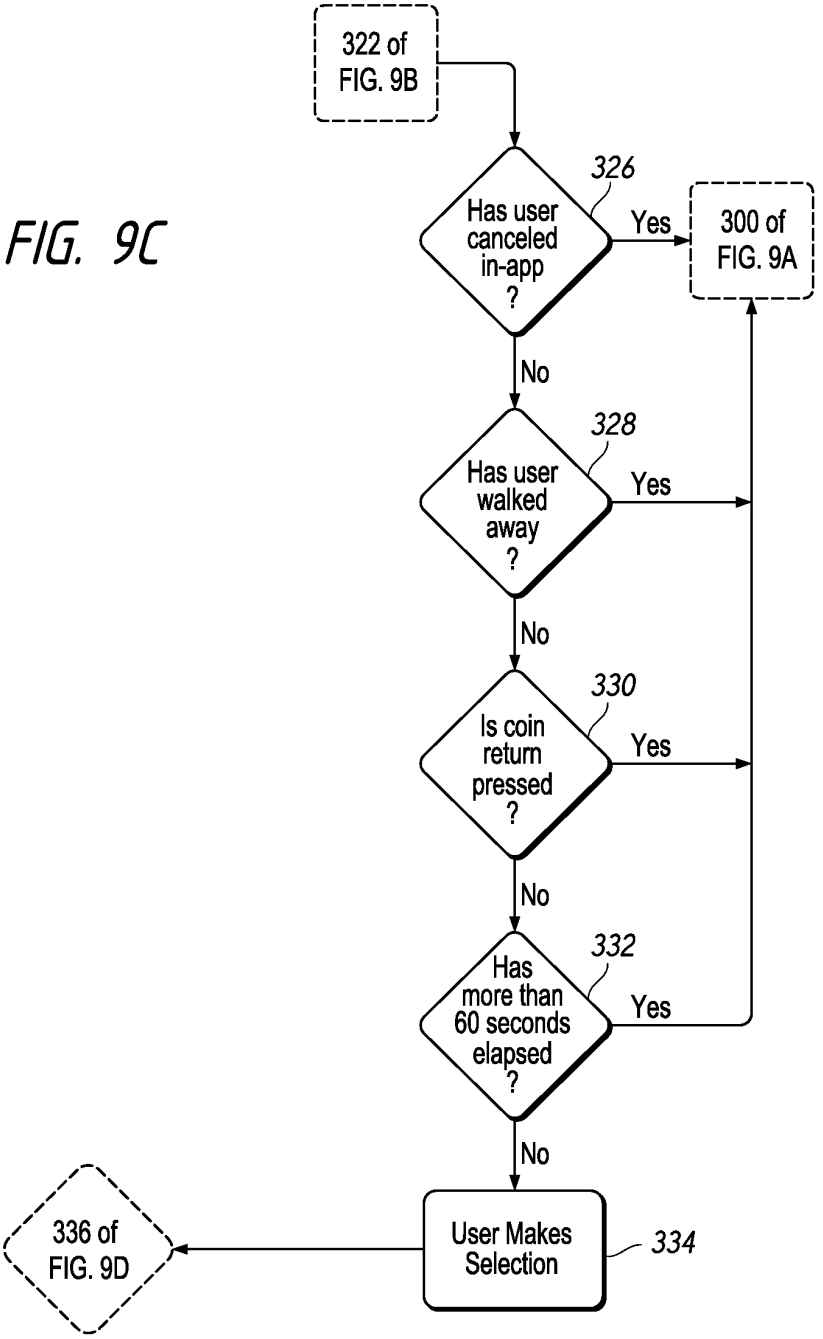
322 of FIG. 9B
326
Has user canceled in-app ?
Yes
300 of FIG. 9A
No
328
Has user walked away ?
Yes
No
330
Is coin return pressed ?
Yes
No
332
Has more than 60 seconds elapsed ?
Yes
No
User Makes Selection
334
336 of FIG. 9D

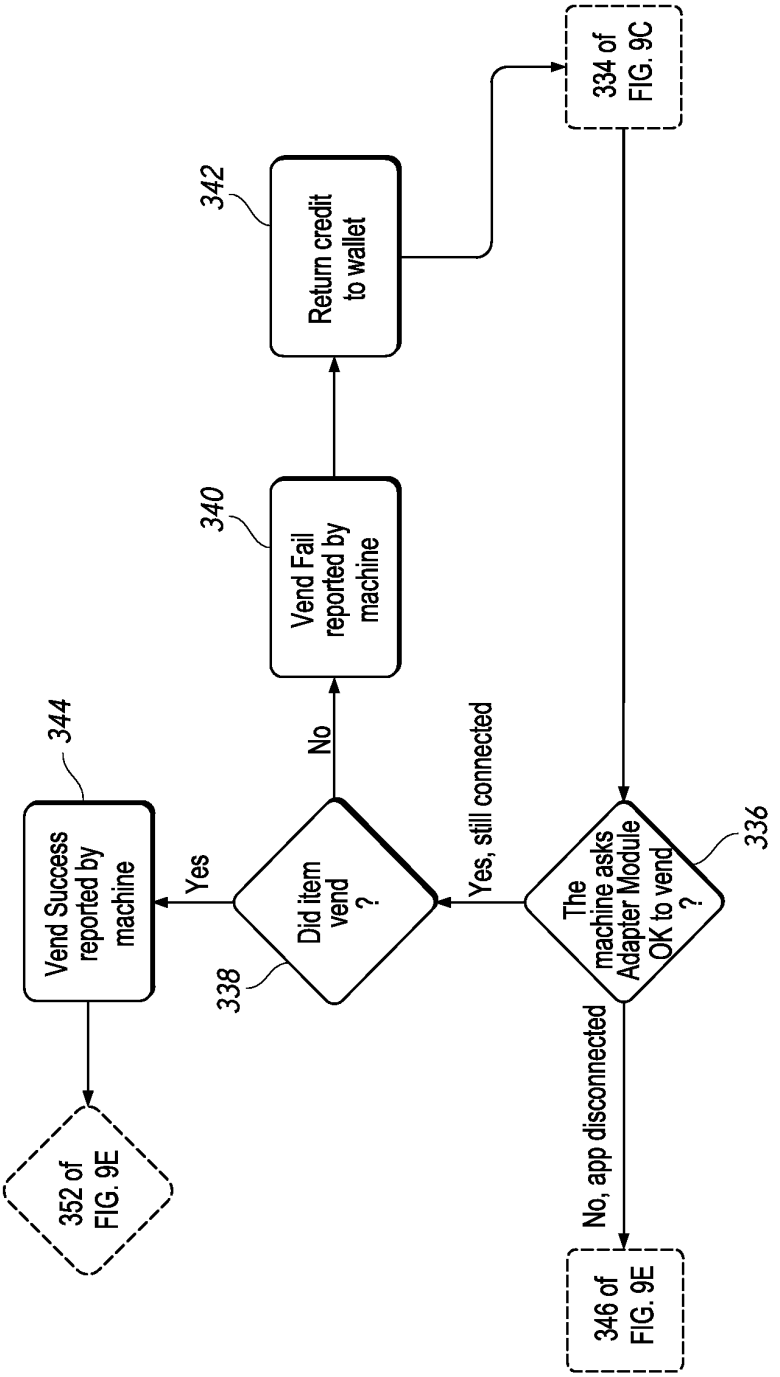
334 of FIG. 9C
342
Return credit to wallet
340
Vend Fail reported by machine
344
Vend Success reported by machine
Yes
No
Yes, still connected
Did item vend ?
338
The machine asks Adapter Module OK to vend ?
336
No, app disconnected
352 of FIG. 9E
346 of FIG. 9E

FIG. 9D

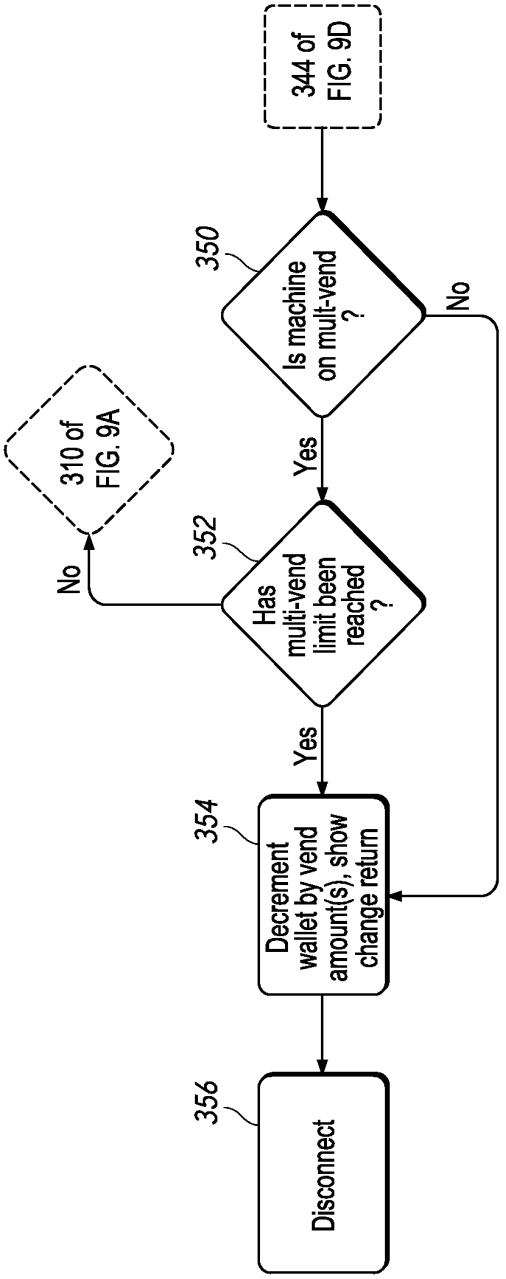
344 of FIG. 9D
350
Is machine on mult-vend ?
No
Yes
352
Has multi-vend limit been reached ?
No
310 of FIG. 9A
Yes
354
Decrement wallet by vend amount(s), show change return
356
Disconnect

FIG. 9E

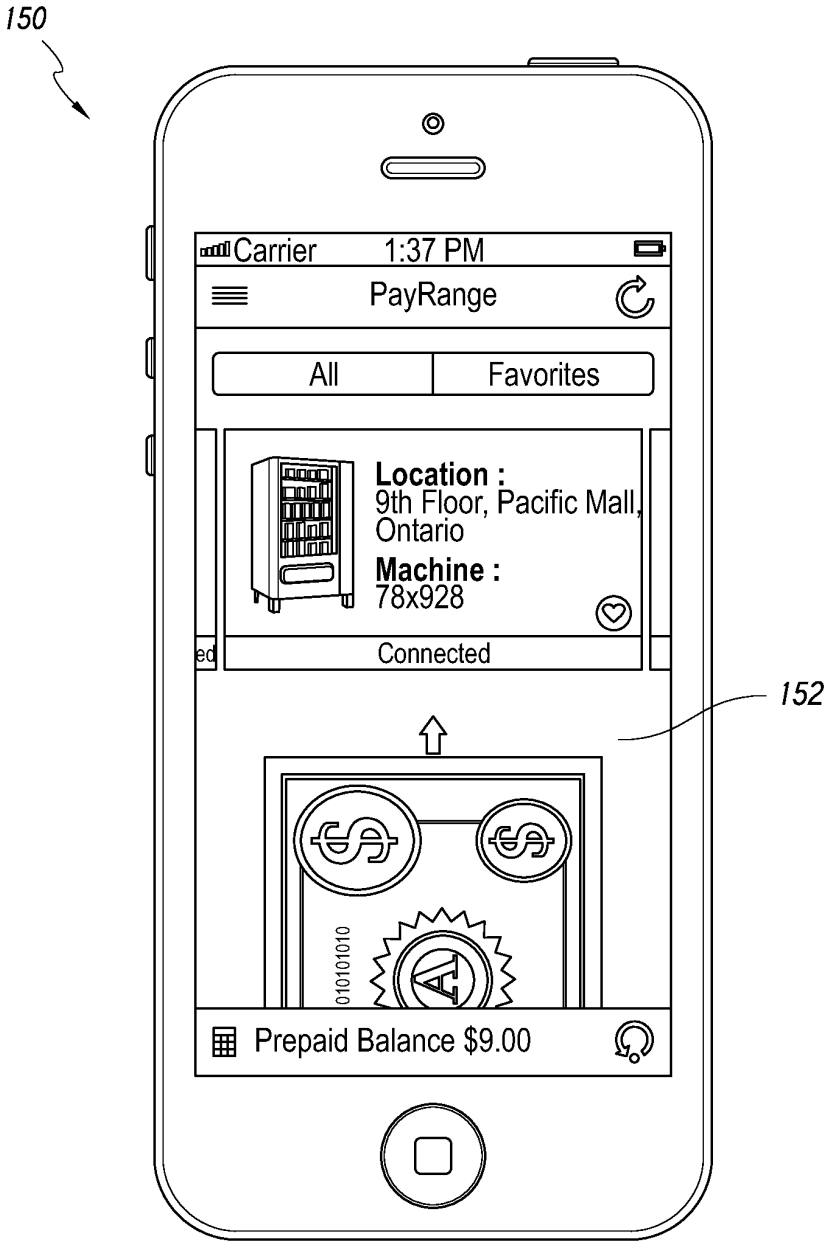
150
Carrier
1:37 PM
PayRange
All
Favorites
Location :
9th Floor, Pacific Mall, Ontario
Machine :
78x928
Connected
152
010101010
Prepaid Balance $9.00

FIG. 10A

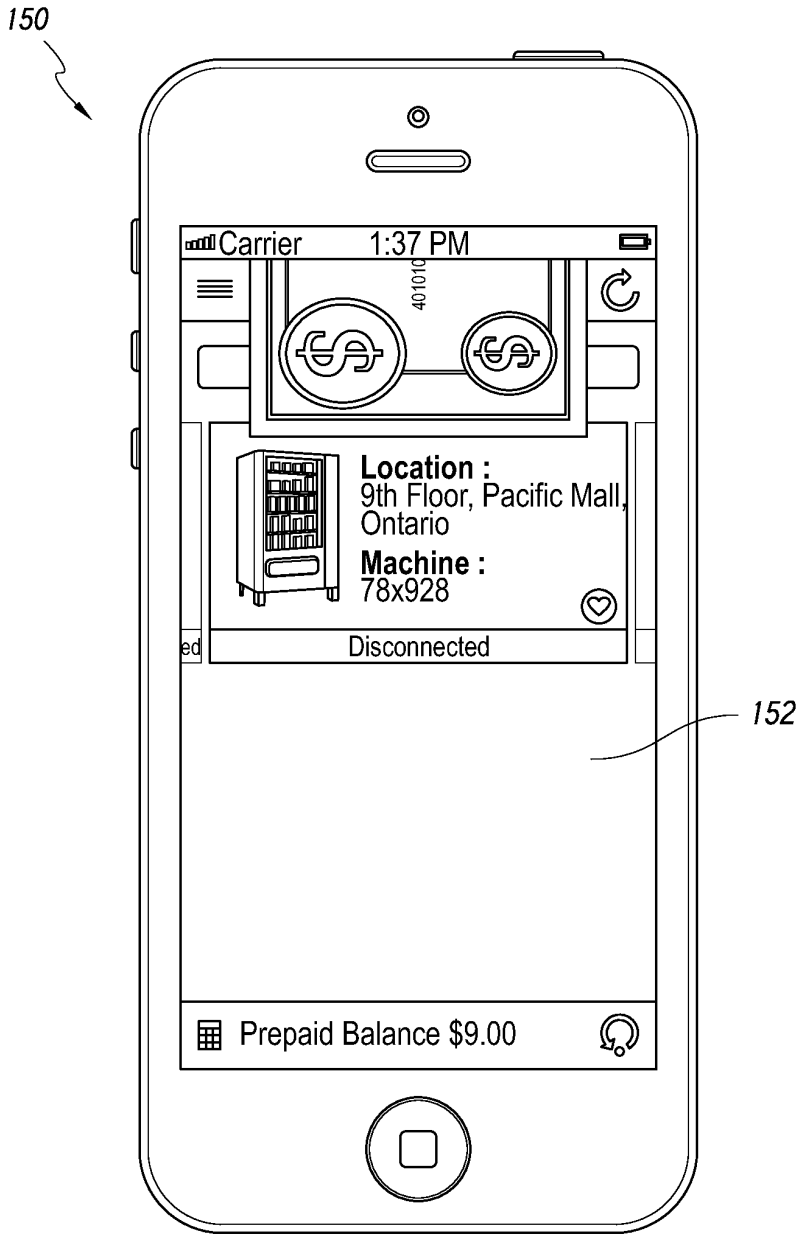
150
Carrier
1:37 PM
401010
Location :
9th Floor, Pacific Mall,
Ontario
Machine :
78x928
ed
Disconnected
152
Prepaid Balance $9.00

FIG. 10B

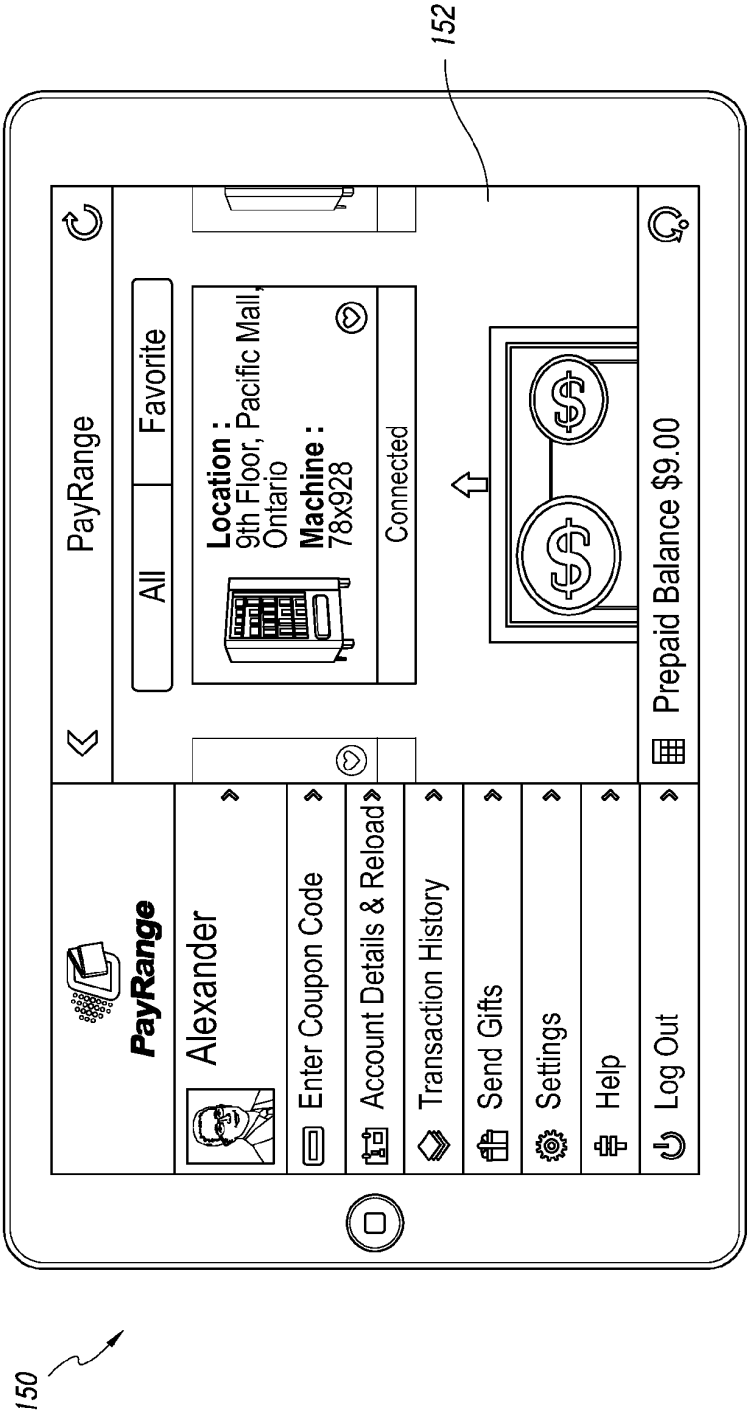
152
PayRange
All
Favorite
Location :
9th Floor, Pacific Mall,
Ontario
Machine :
78x928
Connected
Prepaid Balance $9.00
PayRange
Alexander
Enter Coupon Code
Account Details & Reload
Transaction History
Send Gifts
Settings
Help
Log Out
150

FIG. 10C

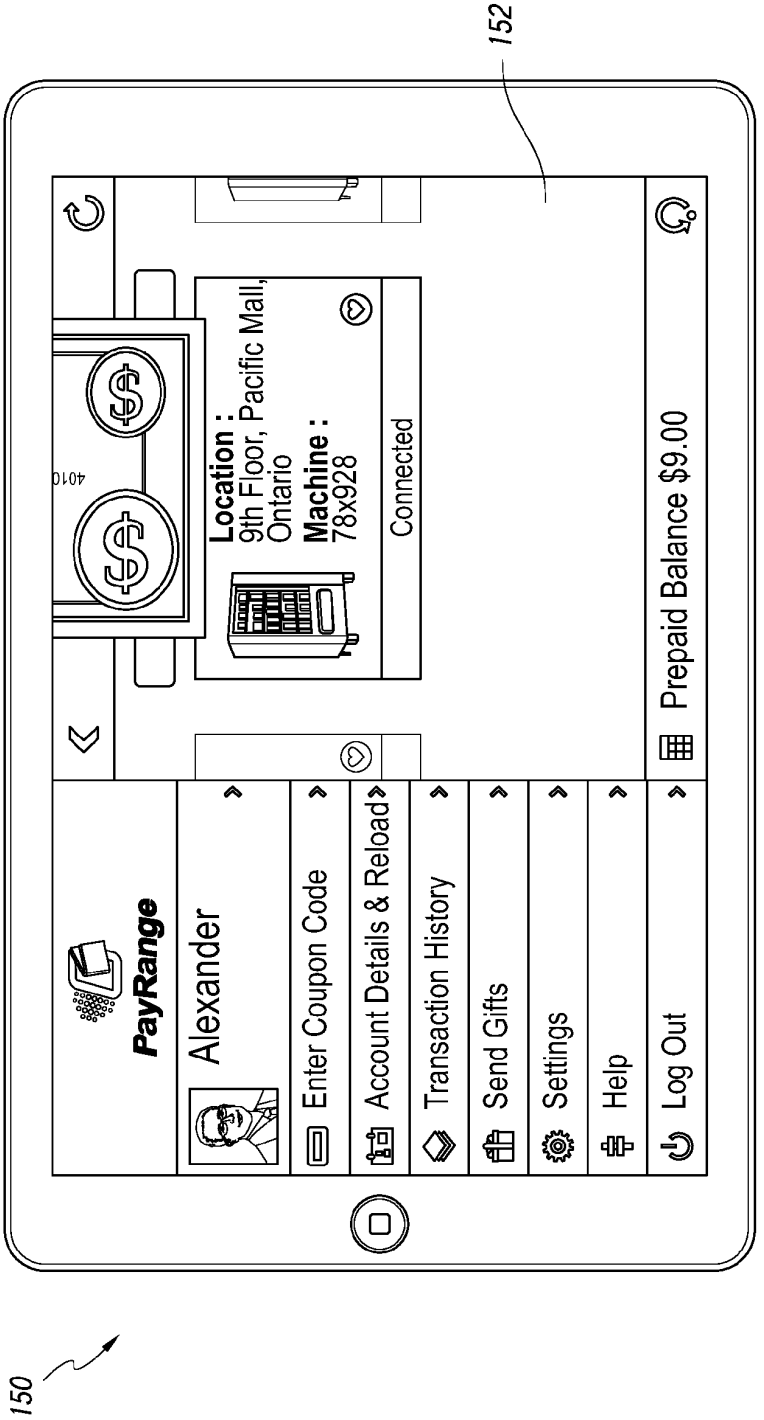
152
PayRange
Alexander
Enter Coupon Code
Account Details & Reload
Transaction History
Send Gifts
Settings
Help
Log Out
Location :
9th Floor, Pacific Mall, Ontario
Machine :
78x928
Connected
Prepaid Balance $9.00
4010
150

FIG. 10D

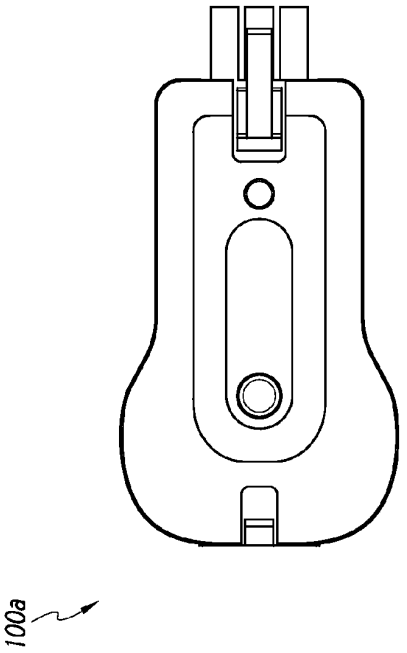

FIG. 12

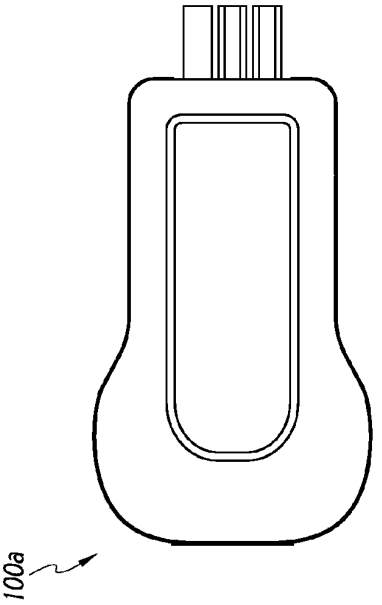

FIG. 13

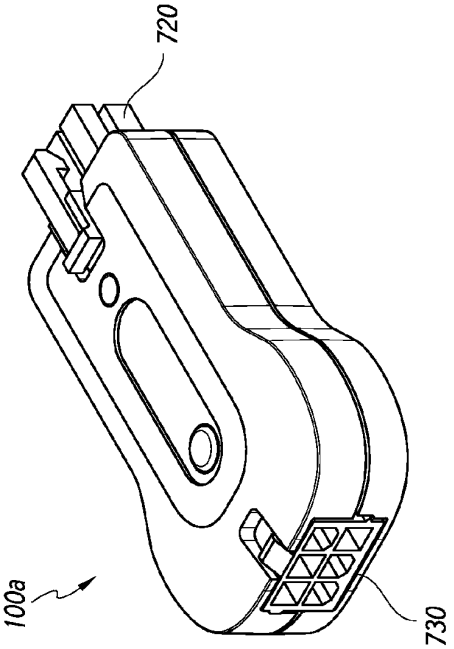

FIG. 11

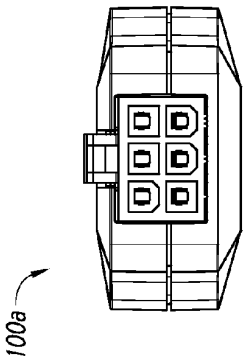

FIG. 16

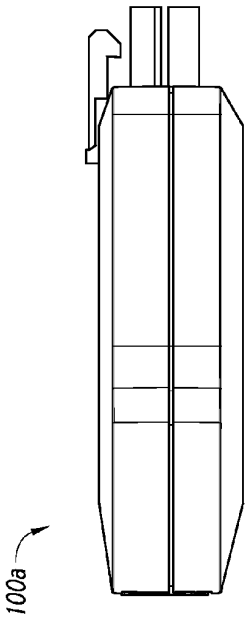

FIG. 14

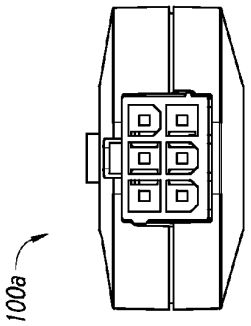

FIG. 15

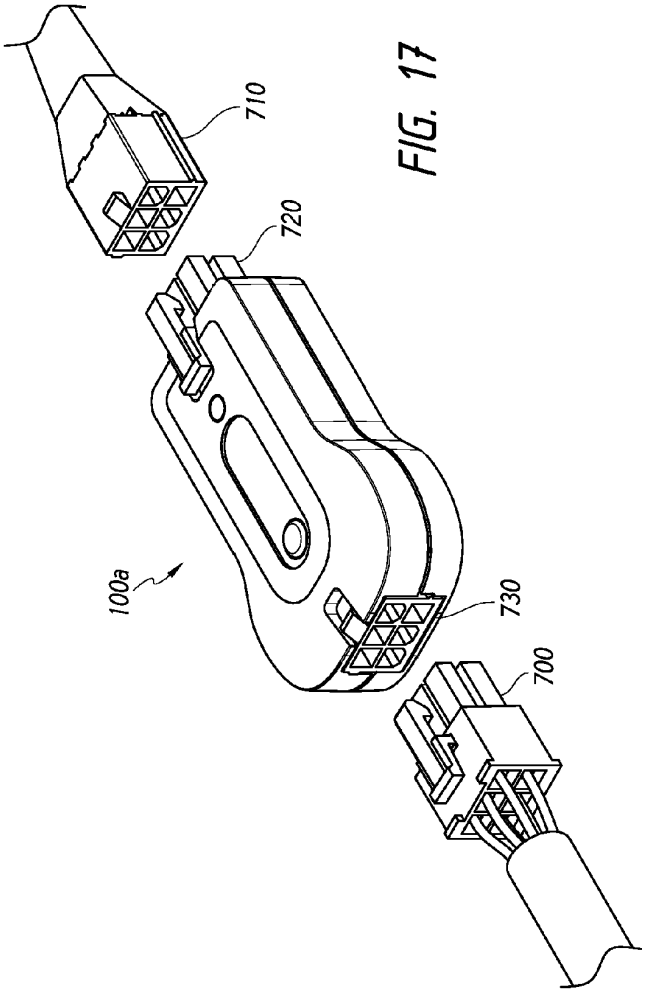

FIG. 17

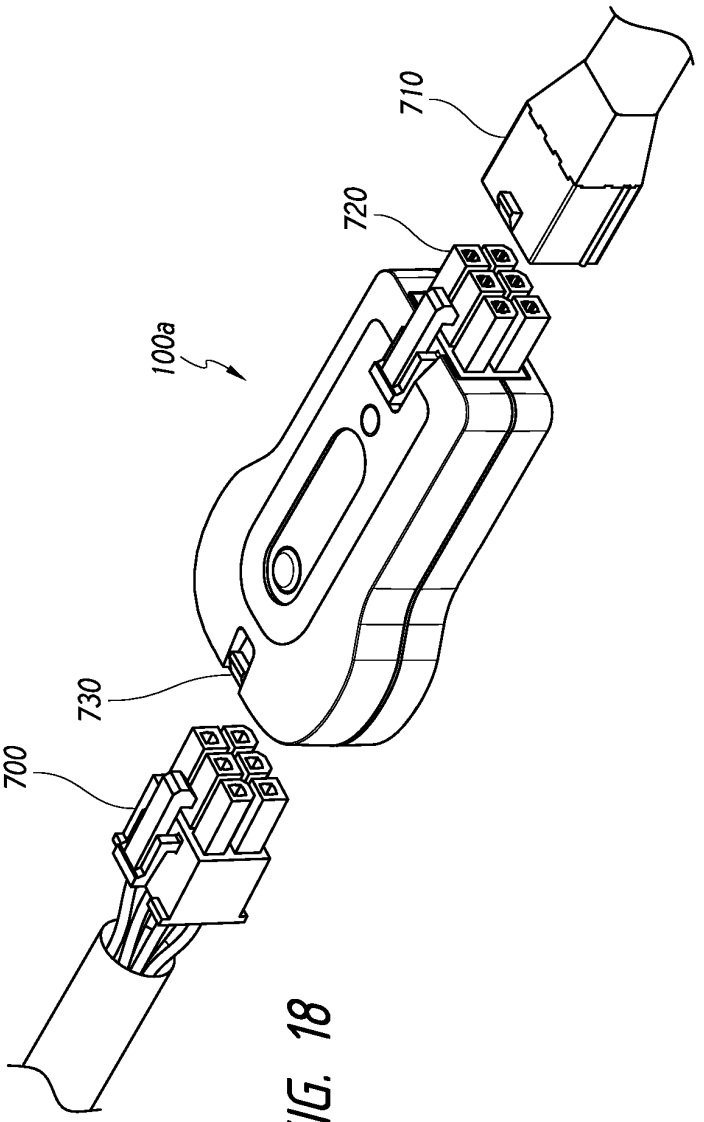

FIG. 18

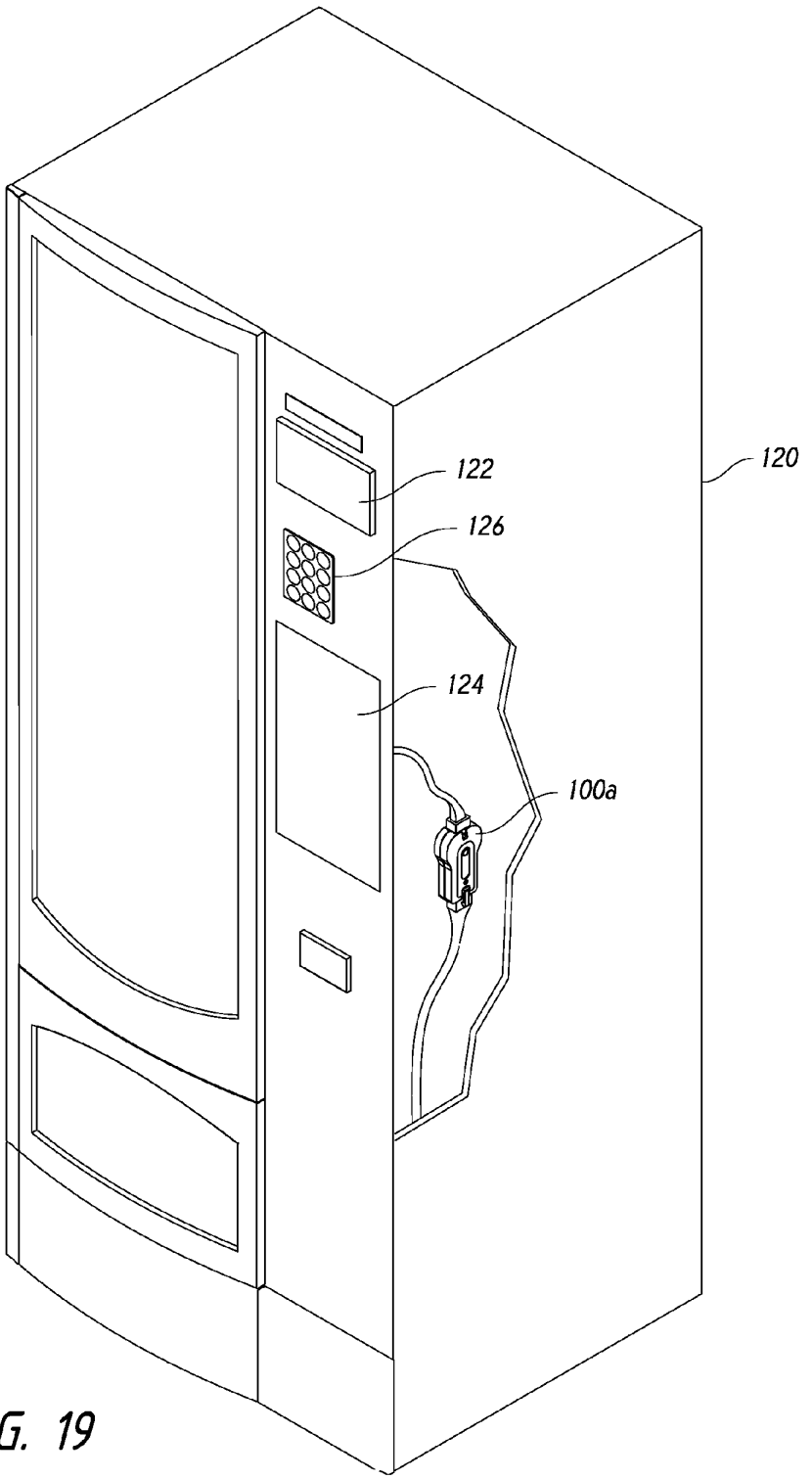

FIG. 19

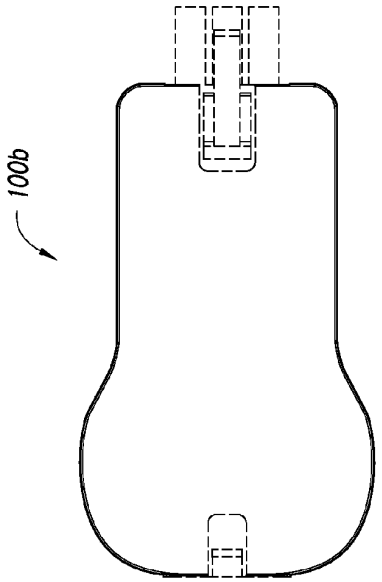

FIG. 21

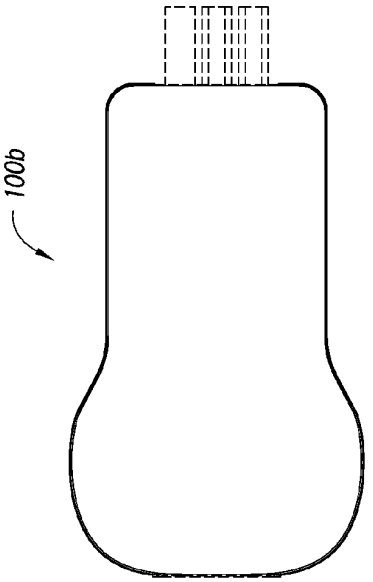

FIG. 22

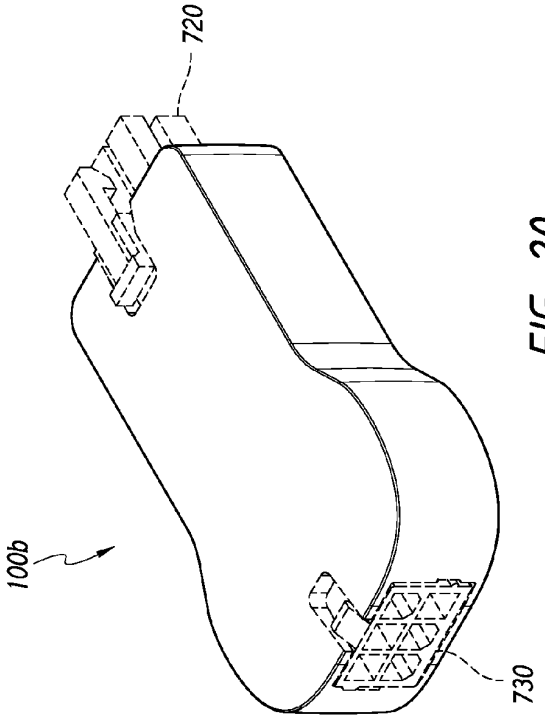

FIG. 20

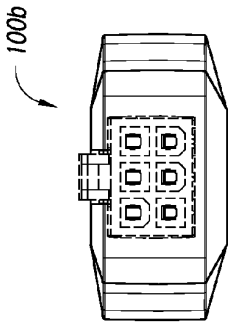

FIG. 25

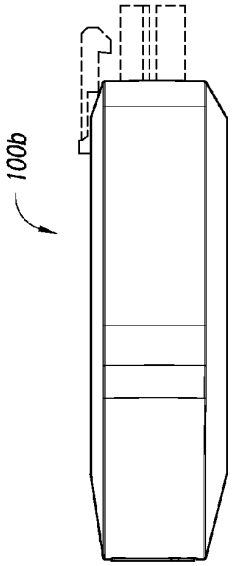

FIG. 23

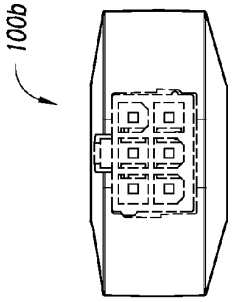

FIG. 24

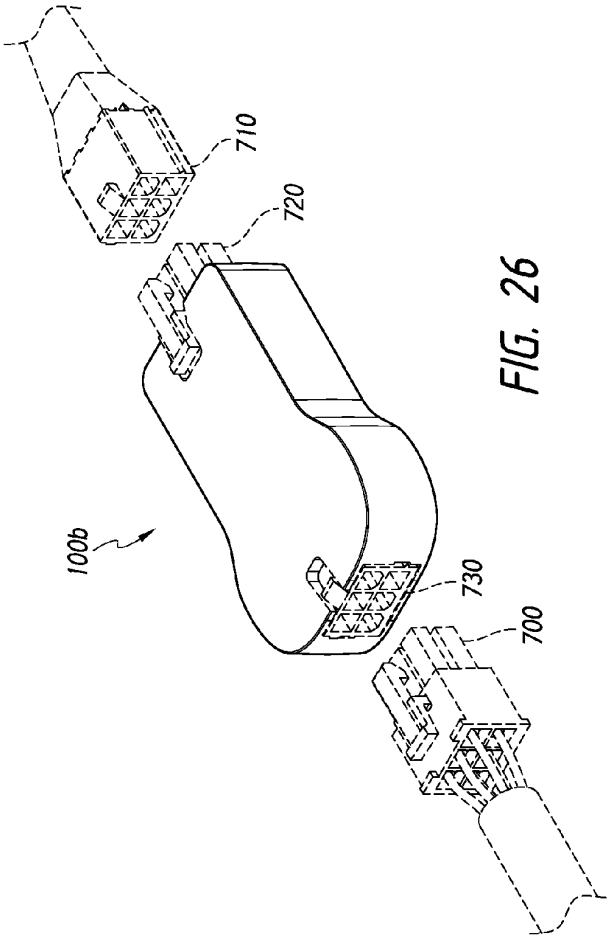

FIG. 26

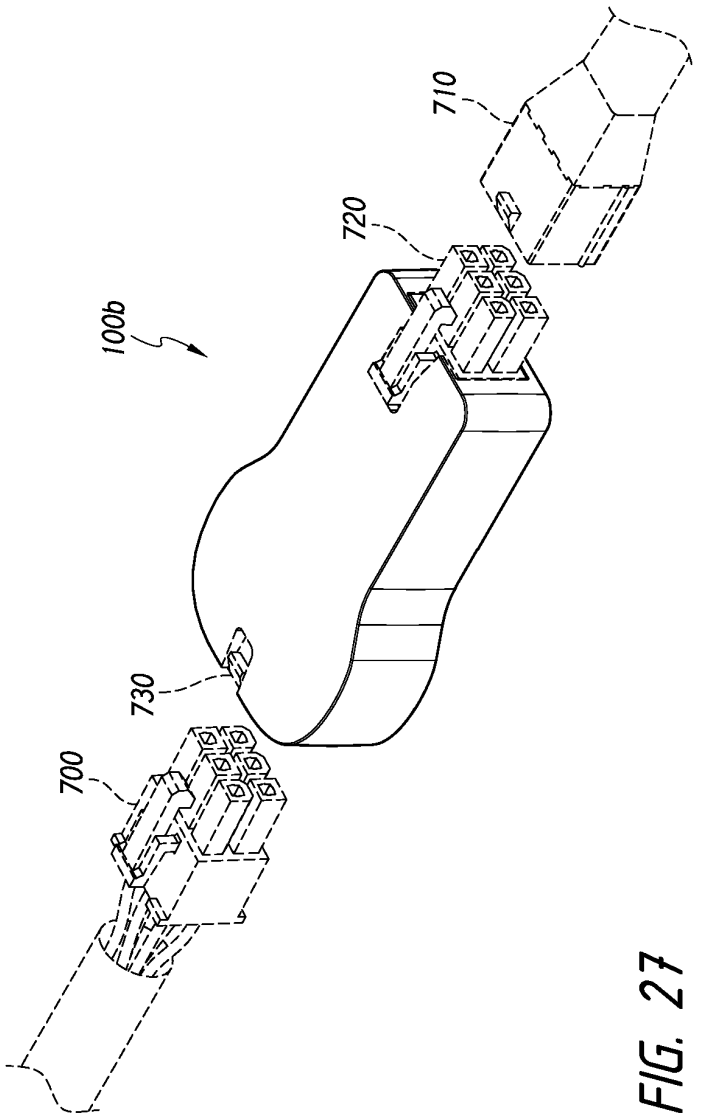

FIG. 27

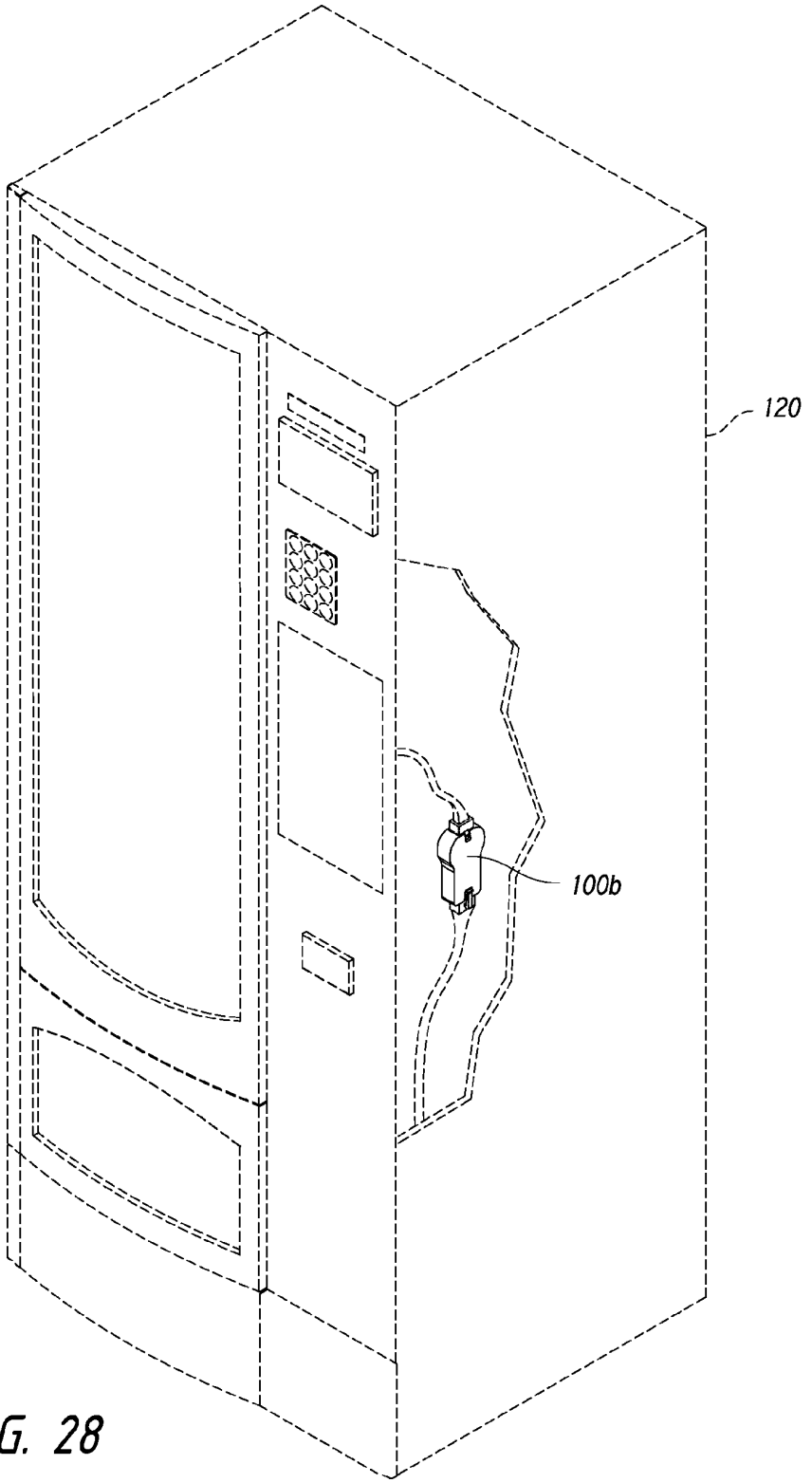

FIG. 28

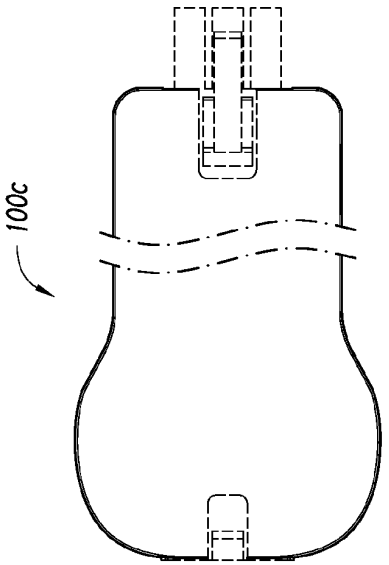

FIG. 30

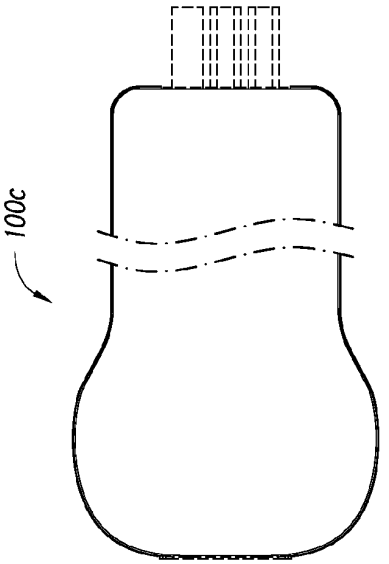

FIG. 31

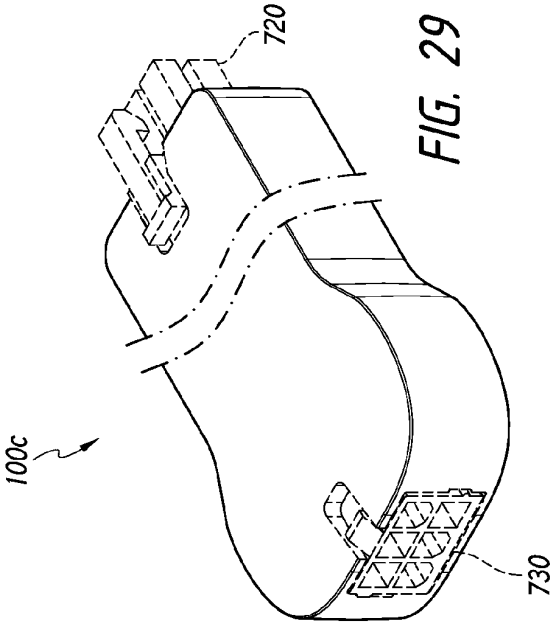

FIG. 29

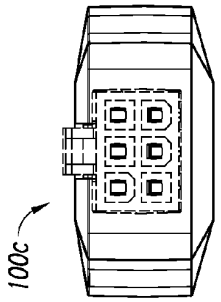

FIG. 34

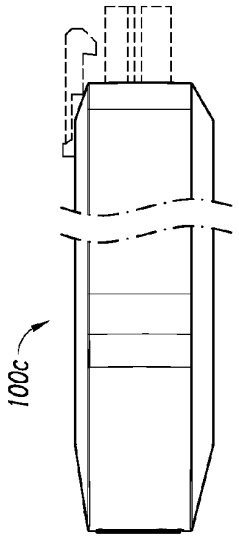

FIG. 32

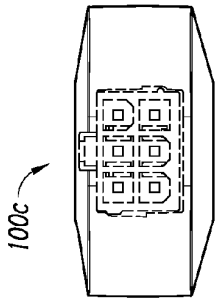

FIG. 33

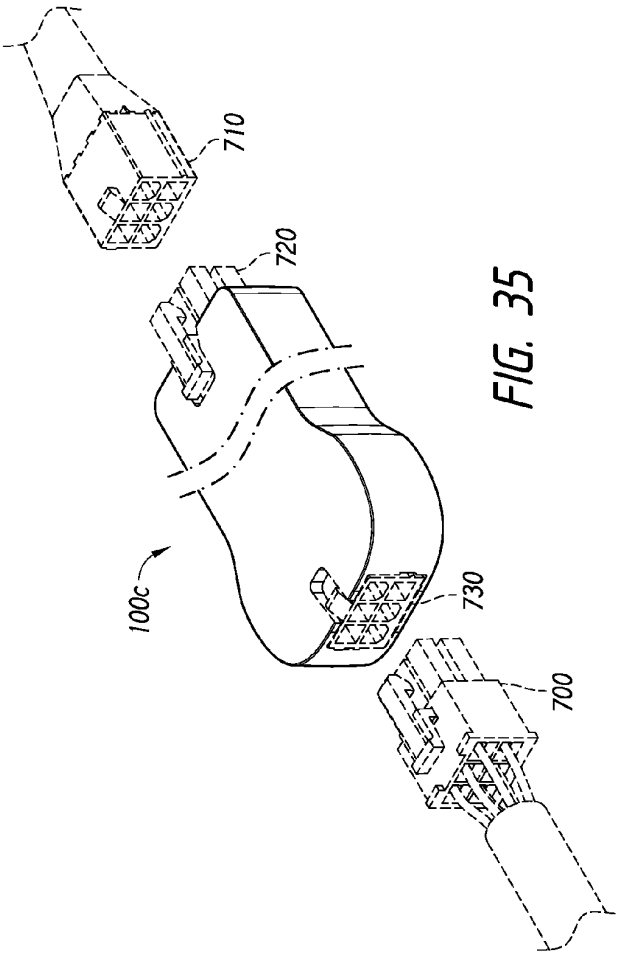

FIG. 35

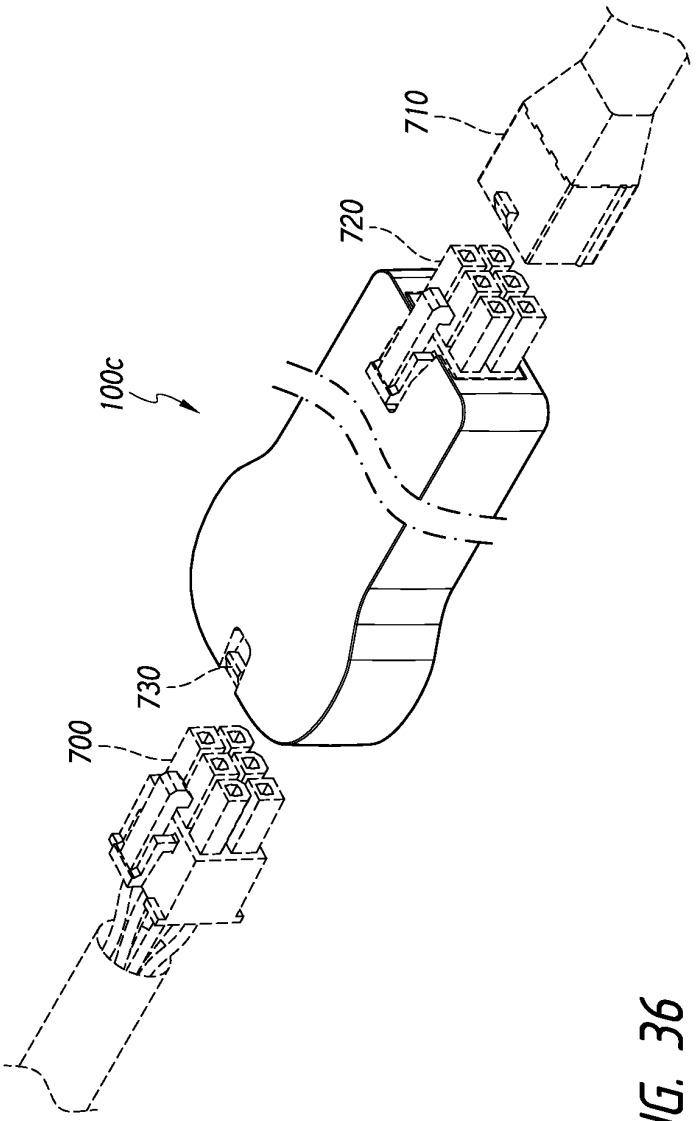

FIG. 36

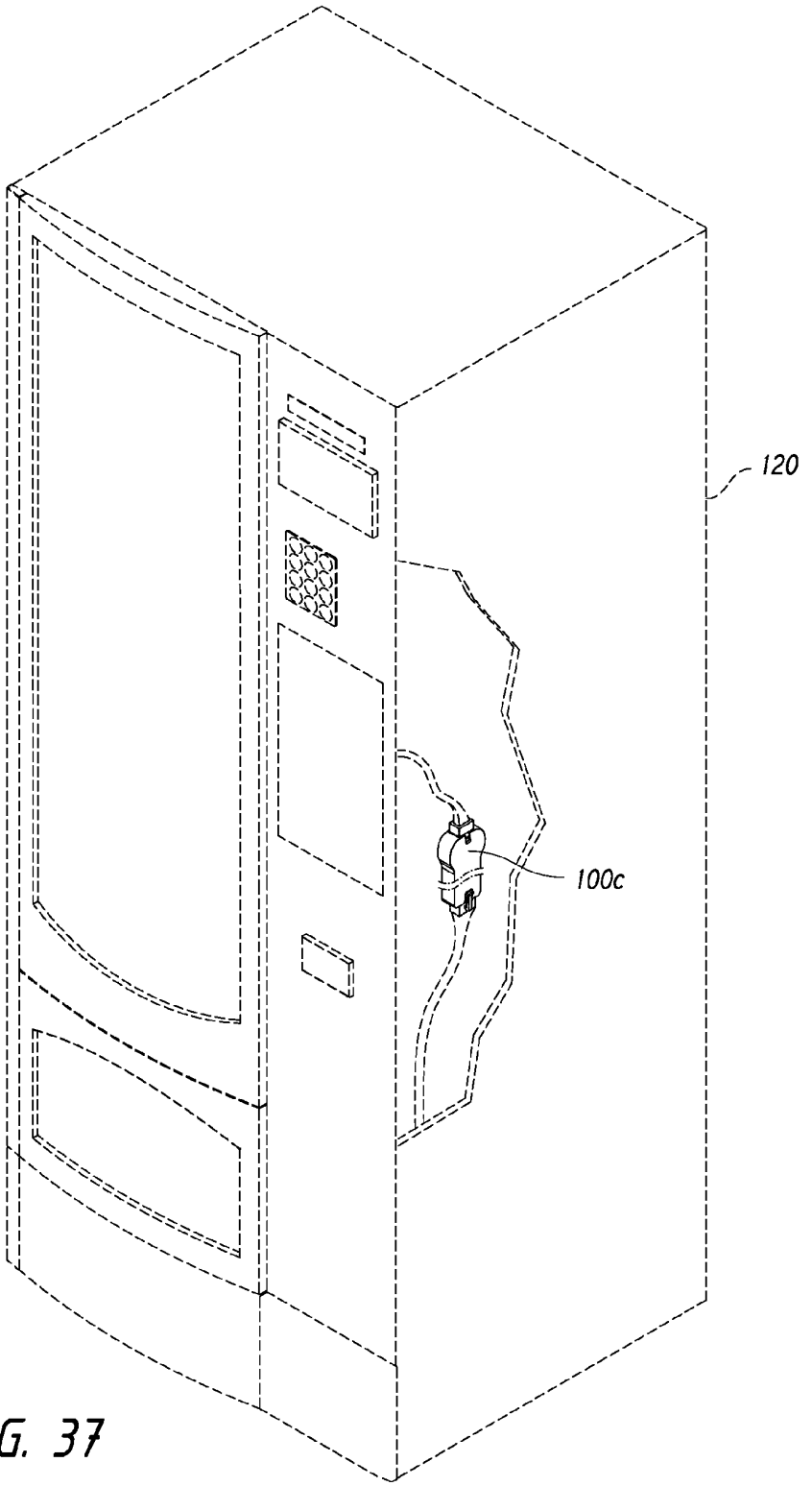

FIG. 37

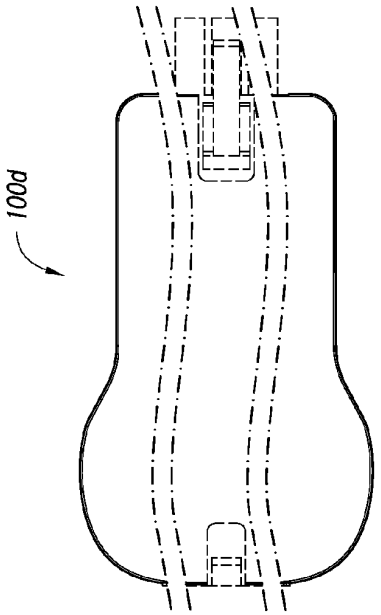

FIG. 39

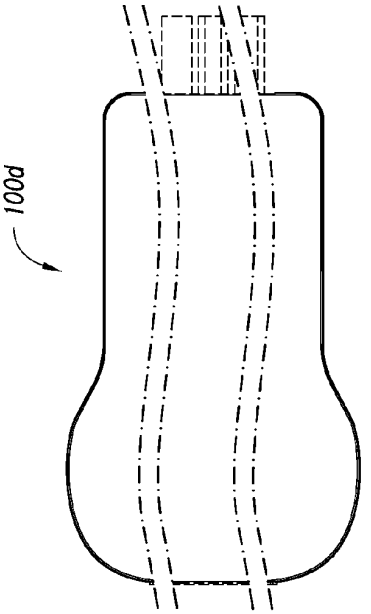

FIG. 40

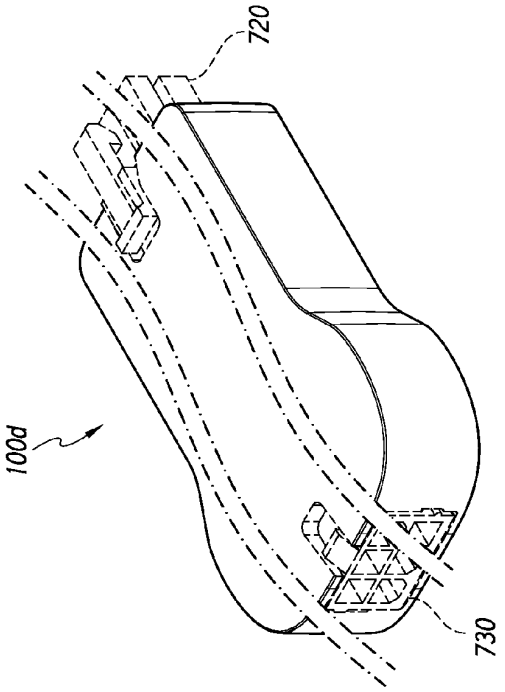

FIG. 38

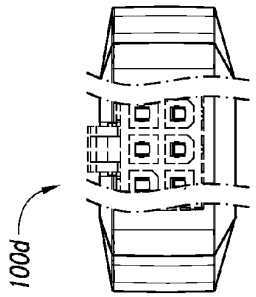

FIG. 43

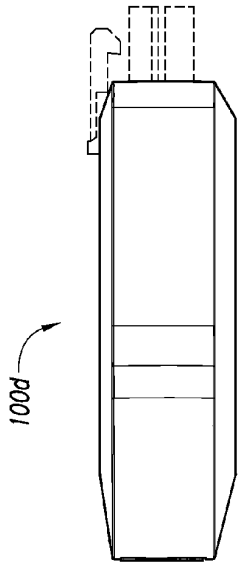

FIG. 41

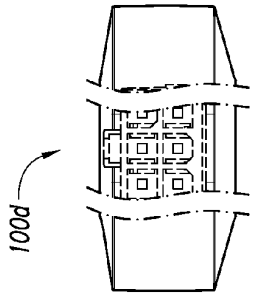

FIG. 42

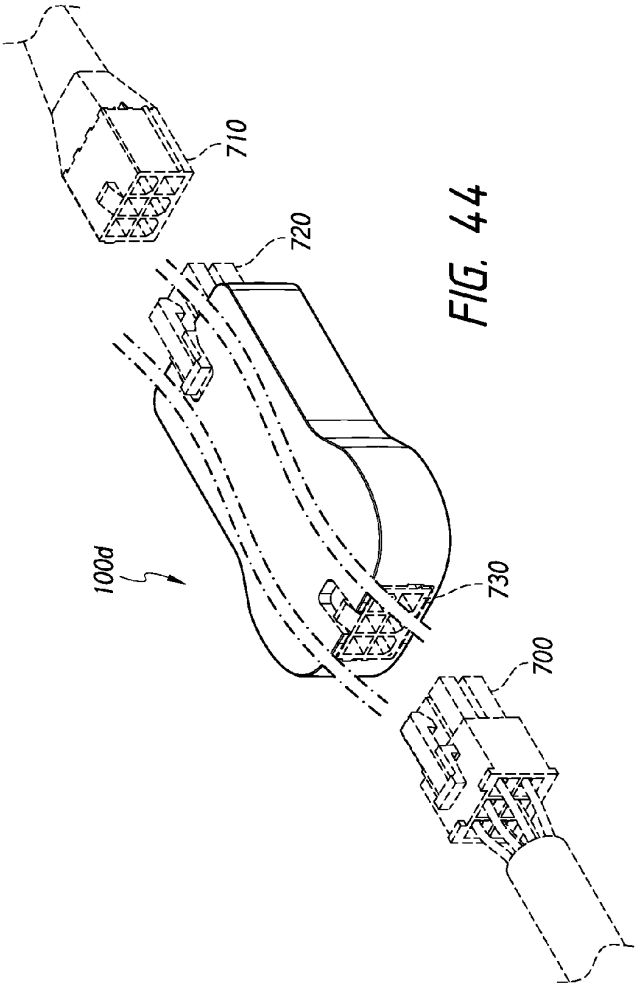

FIG. 44

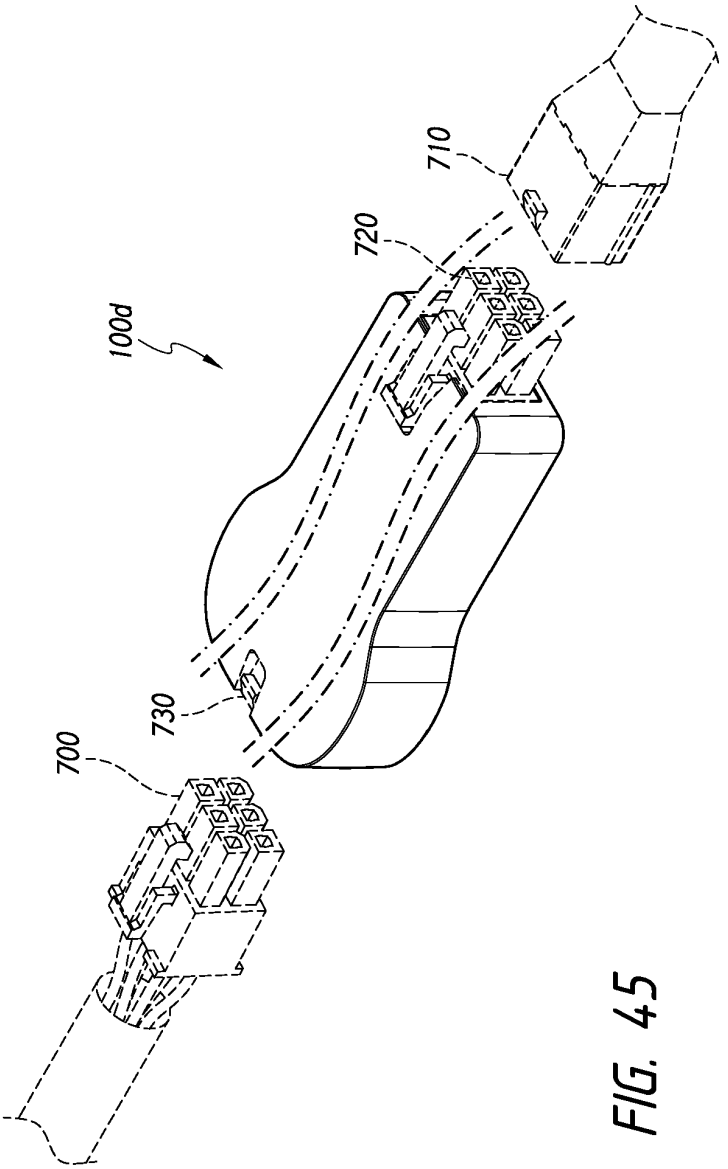

FIG. 45

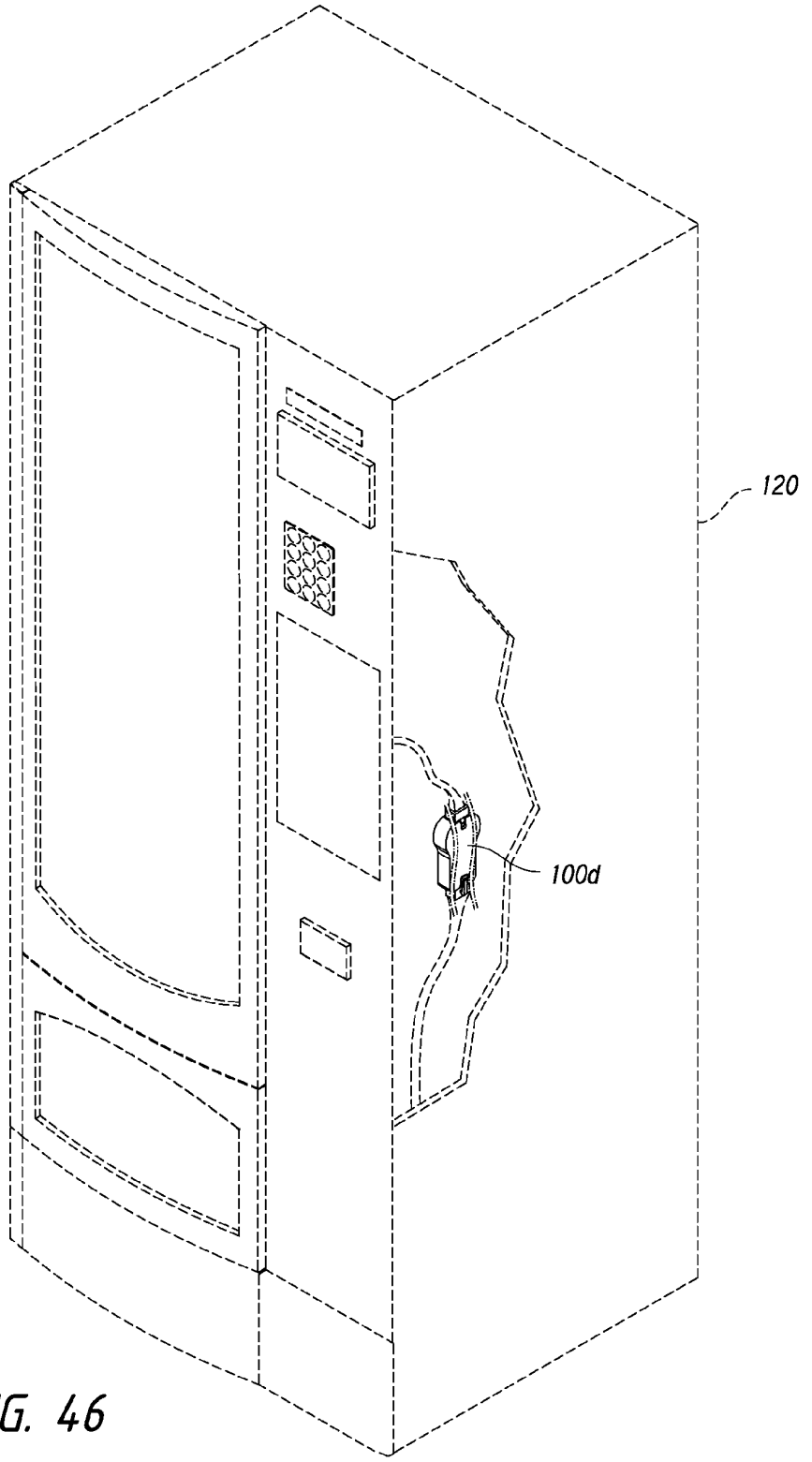

FIG. 46

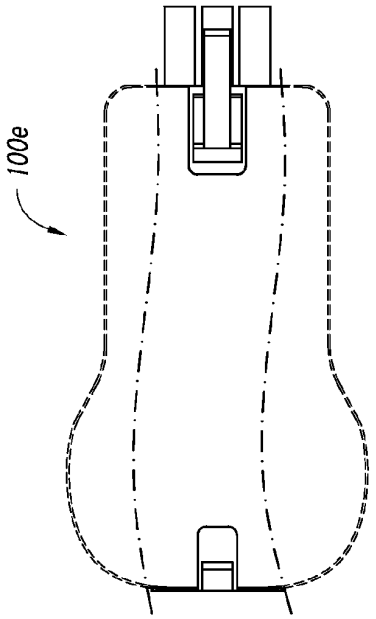

FIG. 48

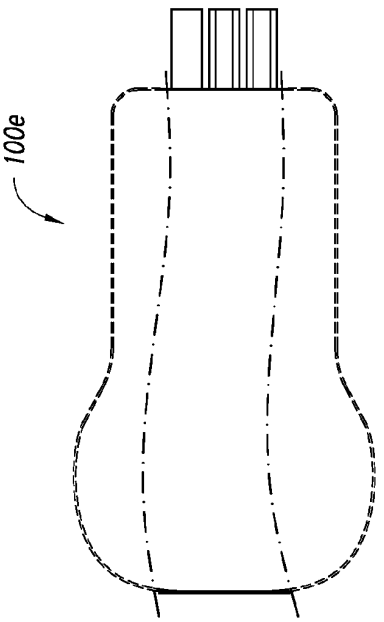

FIG. 49

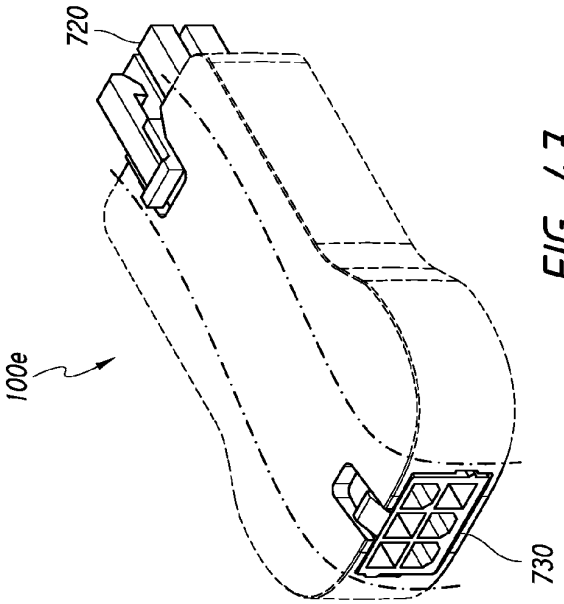

FIG. 47

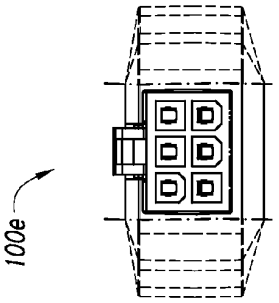

FIG. 52

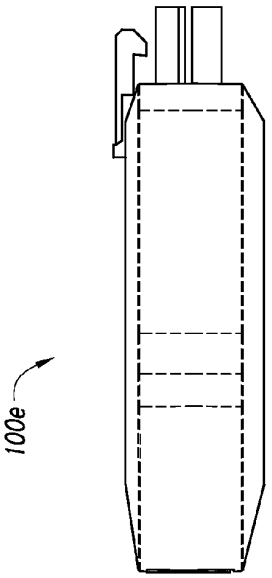

FIG. 50

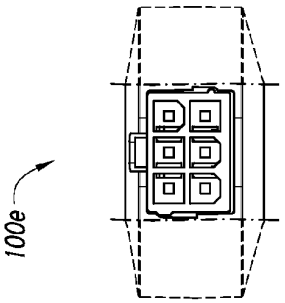

FIG. 51

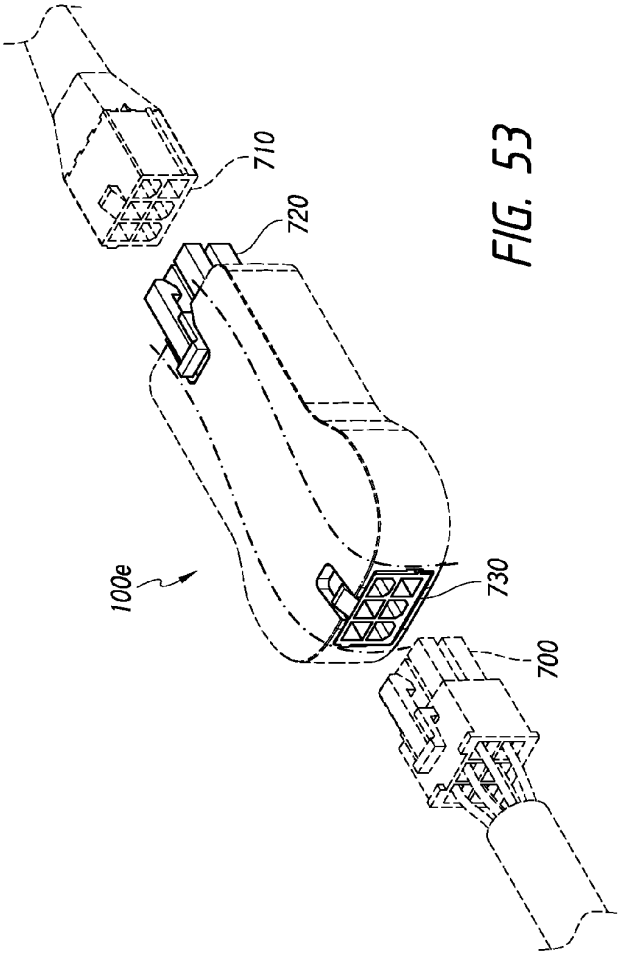

FIG. 53

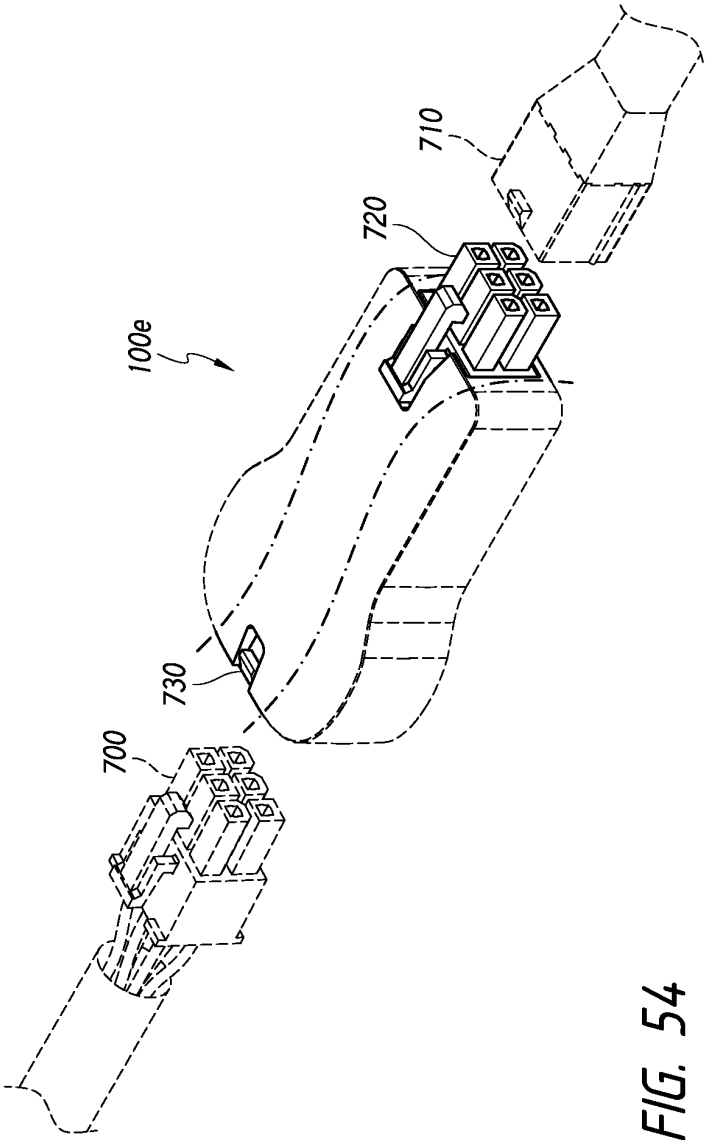

FIG. 54

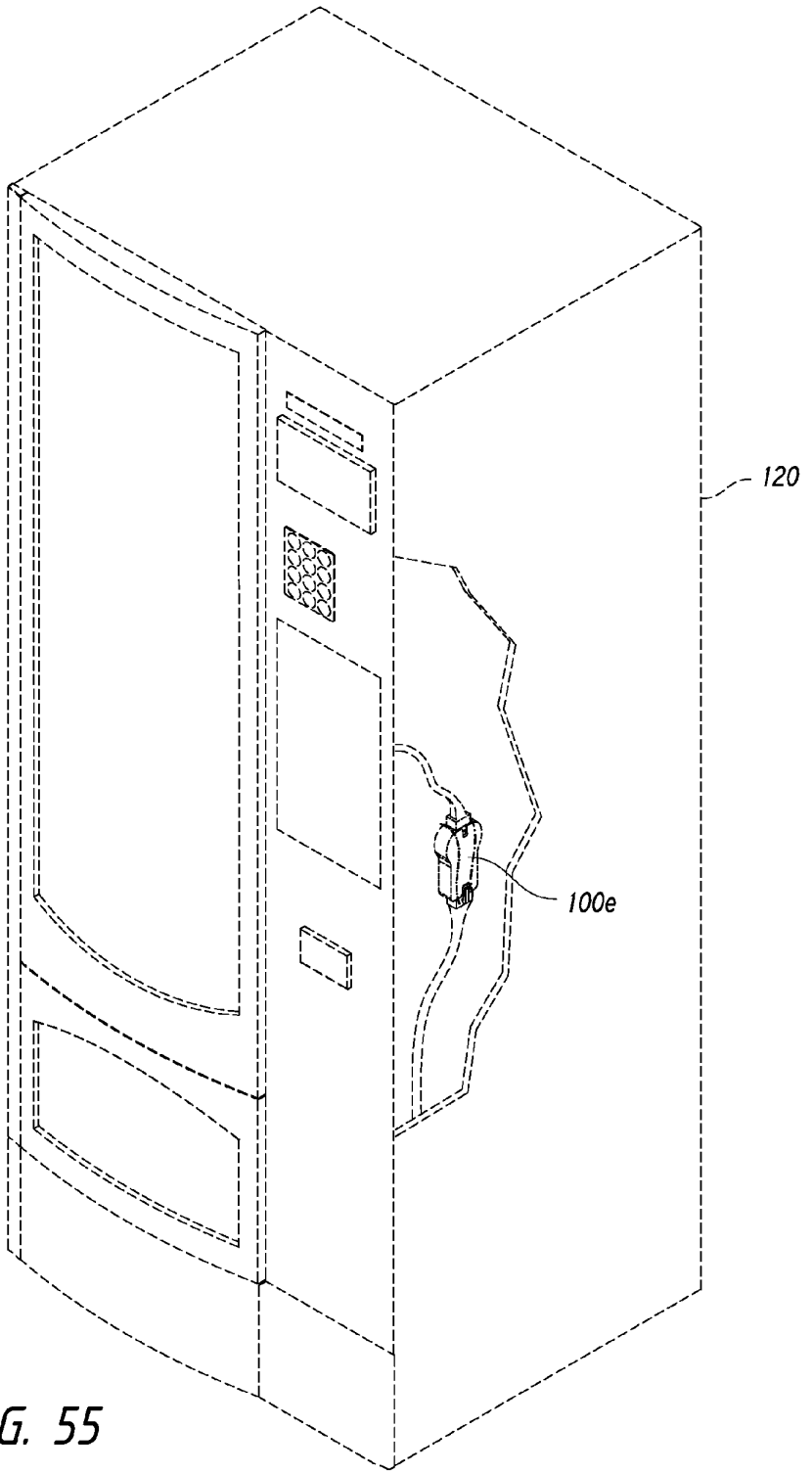

FIG. 55

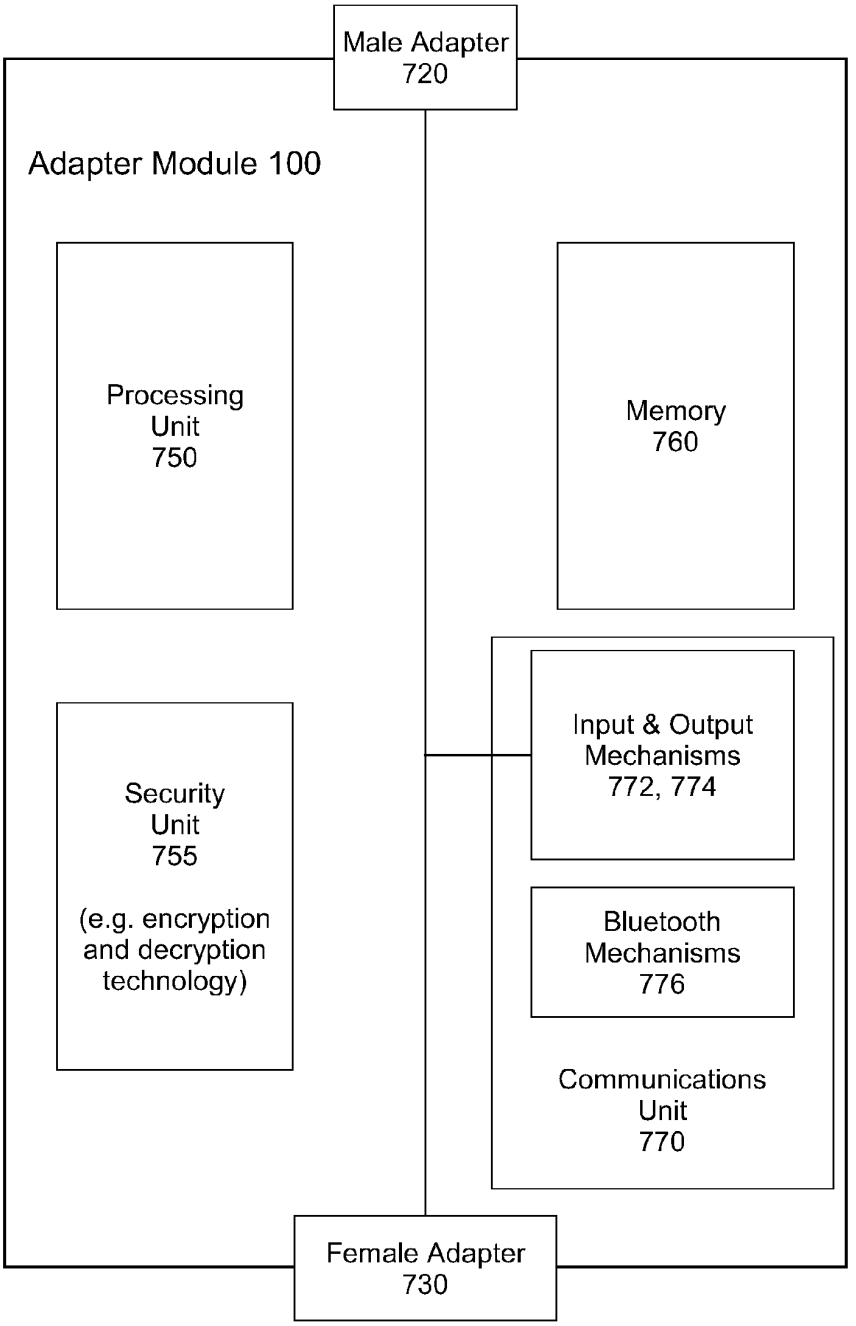
Male Adapter
720
Adapter Module 100
Processing
Unit
750
Memory
760
Security
Unit
755
(e.g. encryption
and decryption
technology)
Input & Output
Mechanisms
772, 774
Bluetooth
Mechanisms
776
Communications
Unit
770
Female Adapter
730

FIG. 56

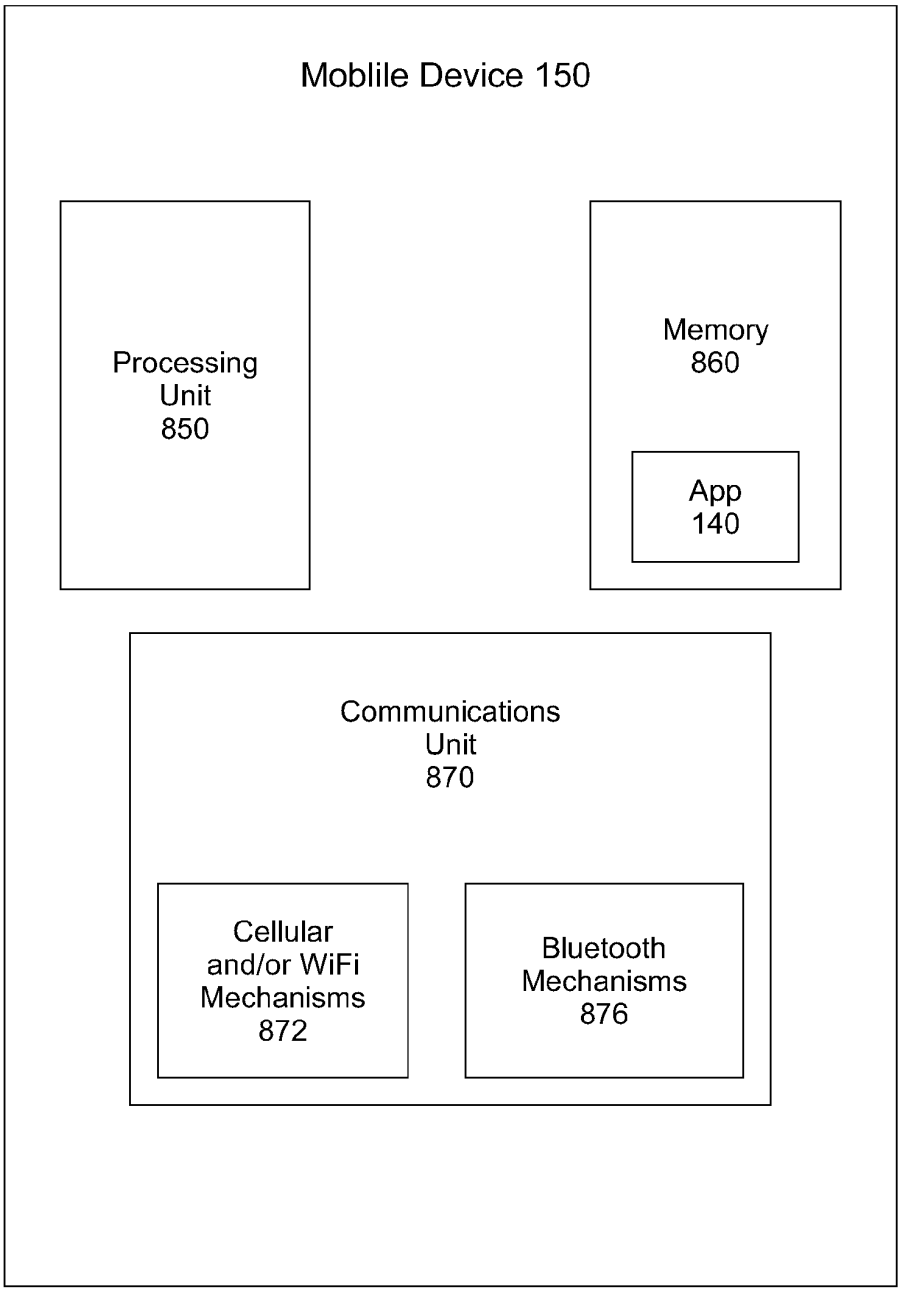
Moblile Device 150
Processing Unit 850
Memory 860
App 140
Communications Unit 870
Cellular and/or WiFi Mechanisms 872
Bluetooth Mechanisms 876

FIG. 57

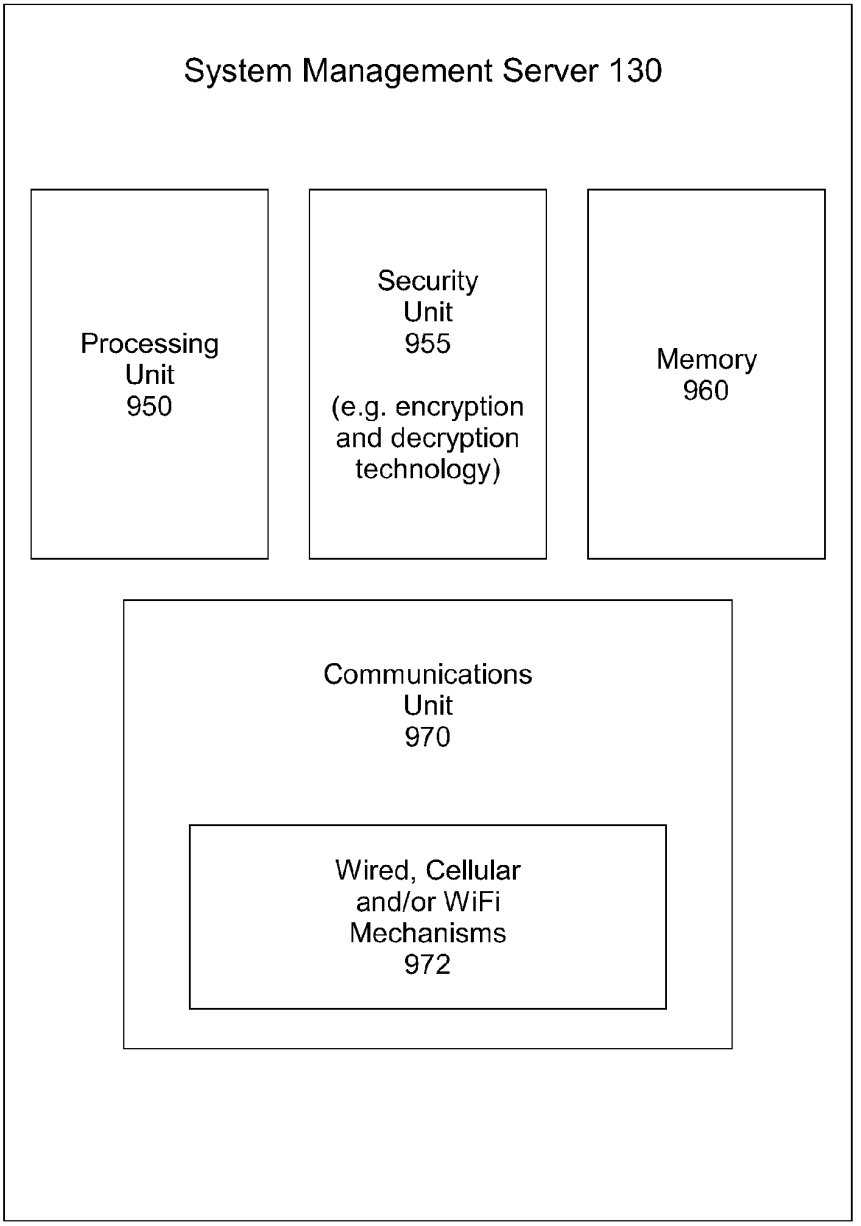
System Management Server 130
Processing Unit 950
Security Unit 955
(e.g. encryption and decryption technology)
Memory 960
Communications Unit 970
Wired, Cellular and/or WiFi Mechanisms 972

FIG. 58

MOBILE-DEVICE-TO-MACHINE PAYMENT SYSTEMS

The present application is an application claiming the benefit of U.S. Provisional Patent Application No. 61/917,936, filed Dec. 18, 2013, and a continuation-in-part of U.S. Design patent application No. 29/477,025, filed Dec. 18, 2013. The present application is based on and claims priority from these applications, the disclosures of which are hereby expressly incorporated herein by reference.

BACKGROUND OF THE INVENTION

Disclosed herein are mobile-device-to-machine payment systems and, more specifically, mobile-device-to-machine payment systems over a non-persistent network connection and featuring hands-free and manual modes.

Vending machines (or "automatic retailing" machines), in the broadest sense, have been around for thousands of years. The first simple mechanical coin operated vending machines were introduced in the 1880s. Modern vending machines stock many different types of products including, but not limited to drinks (e.g. water, juice, coffee, and soda) and edible food products/items (e.g. snacks, candy, fruit, and frozen meals), as well as a wide variety of non-food items. In this fast paced world, vending machines are ubiquitous.

Vending machines are one type of "payment accepting unit" (payment accepting units are also referred to herein generically as "machines"). A payment accepting unit (or machine) is equipment that requires payment for the dispensing of products and/or services. In addition to vending machines, payment accepting units can also be other machines that require payment for the dispensing of a product and/or services including, but not limited to parking meters, toll booths, laundromat washers and dryers, arcade games, kiosks, photo booths, toll booths, transit ticket dispensing machines, and other known or yet to be discovered payment accepting units.

In using a payment accepting unit, a user will (1) approach the payment accepting unit, (2) determine from the face of the payment accepting unit the product (or service) he desires, (3) insert payment (e.g. coins, bills, or payment cards), and (4) input his selection into the payment accepting unit using a user interface (e.g. a series of buttons, a key pad, touch screen, or other input mechanism using, for example, the column and row at which a product is located). Based on the user's inputted selection, technology within the payment accepting unit provides the desired product (or service) to the user.

As the number of people with internet-connected mobile devices proliferates, so does the variety of uses for such devices. Mobile payment is a logical extension.

There is a large development effort around bringing mobile payment to the retail sector in an effort to not only provide options to the user, but also increased convenience.

In recent years, many improvements to modern vending machines have been suggested. Many of the innovations relate to means for communicating with the vending machine. Some of these communication innovations are detailed in U.S. Pat. No. 6,584,309 to Whigham (the "Whigham reference"), U.S. Pat. No. 7,085,556 to Offer (the "Offer reference"), U.S. Pat. No. 7,127,236 to Khan et al. (the "Khan reference"), U.S. Pat. No. 7,721,958 to Belfer et al. (the "Belfer reference"), U.S. Pat. No. 8,396,589 to Katzenstein Garibaldi et al. (the "Garibaldi reference"), U.S. Pat. No. 8,489,140 to Weiner et al. (the "Weiner reference"), and International Publication No. WO/2008/083025 to Carlson (the "Carlson reference").

The Whigham reference is directed to a system and method for purchasing a product from an automatic vending machine by means of a consumer's cellular telephone. The consumer requests a product available from the vending machine by dialing a specified telephone number that connects the consumer's cellular telephone to a server operated by a billing agency. The server recognizes the request for the product, creates a transaction record, and communicates a vend code to the consumer. Upon receiving the vend code from the server, the consumer transmits the vend code to the vending machine. The vend code may be an RF code, an audible tone code, or a manual code. Upon receipt of the vend code from the consumer, the vending machine dispenses the requested product.

The Offer reference is directed to a vending machine that is designed to communicate with a cellular phone such that it dispenses a product when it receives information indicating that the product has been selected. The Offer reference teaches permitting the cashless utilization of a vending machines via a communications service, such as a cellular telephone. A response to a signal from the cellular telephone from the vending machine that indicates that a connection has been established between the vending machine and the cellular phone may be a visual indication that is displayed on the cellular telephone. The vending machine outputs the cost of the product and that cost is debited from an account to pay for the product. The Khan reference describes a point of sale MicroAdapter device that enables payment transactions to be effected through a purchaser's personal trusted device (e.g. the user selecting the micropayment application on his personal trusted device and confirming or cancelling the purchase thereon) without relying upon tokens or prepayment cards. In one embodiment, the MicroAdapter includes a transceiver configured to receive a purchase signal from the personal trusted device including order and payment information. In response, the MicroAdapter communicates via wireless telephony with a transaction authorizer to receive authorization for effectuating the purchase transaction. The MicroAdapter can effectuate micropayment transactions authorized by a Billing On Behalf of Others program administered through a wireless carrier/ISP or third party.

The Belfer reference is directed to a system wherein a vending machine has an audio code collector and a code validator that is adapted to receive audio tones from a mobile device. The audio tones include authentication codes and dispense codes to control dispensing of product from the vending machine. To start the transaction, the consumer dials a unique set of symbols and digits to route the call to a verification server. The symbols and digits may correspond to a unique vending machine identification number and product identification numbers.

The Garibaldi reference is directed to an electronic device for the sale of intangible products through vending machines that include interfaces to communicate with external peripherals through the MDB protocol, the RS232 standard, and the DEX protocol, an interface to communicate with users, a communications system that enables it to act as part of a network and communicate with a central system, and a controller, that articulates the communication among the above-mentioned components, so as to enable a central system to perform diverse actions on a vending machine.

The Weiner reference is directed to a system and method for providing product or service with a cellular telephone. The problem identified in the Weiner reference is that mobile communication devices are long-range electronic devices designed to be used for long-range communications. Eschewing the use of near-field communication because it requires

special design or modification of the mobile station (e.g. the vending machine), the Weiner reference teaches a mobile communication device identifier, consisting of: a shielding defining a coverage area, the shielding arranged to reduce radio signals originating externally of the coverage area to be less than a pre-determined signal strength; an antenna associated within the defined coverage area; a transceiver coupled to the antenna, the transceiver communicating with a mobile station inserted within the defined coverage area utilizing a signal strength greater than the pre-determined signal strength; and a service control unit responsive to the transceiver, the service control unit responsive to the communication to output a signal indicative of an authorization to provide a product or service.

The Carlson reference is directed to a system and a method for using a portable consumer device such as a mobile phone for payments and the like. One embodiment of the Carlson system is directed to a method that includes the steps of receiving a payment request message (that includes a request to pay for a product from a vending machine) from a portable consumer device operated by a consumer, sending an authorization response message back to the vending machine wherein the vending machine subsequently prompts the consumer to enter a selection if the authorization response message indicates that the consumer is authorized to make a purchase, and receiving an acknowledgement message from the vending machine that the product was purchased. The step of "sending an authorization response message back to the vending machine" is performed by a remote payment server and would require a persistent network connection.

BRIEF SUMMARY OF THE INVENTION

Disclosed herein are mobile-device-to-machine payment systems and, more specifically, mobile-device-to-machine payment systems over a non-persistent network connection and featuring hands-free and manual modes.

Described herein is a mobile-device-to-machine payment system for facilitating a cashless transaction for purchase of at least one product or service by a user from a payment accepting unit that preferably has input mechanisms. The user has a mobile device that has both short-range communication technology and long-range communication technology. The payment accepting unit is capable of dispensing at least one product or service. The system includes an adapter module and a server. The adapter module is associated with the payment accepting unit and has short-range communication technology for communicating with the short-range communication technology of the mobile device. The server has long-range communication technology for communicating with the long-range communication technology of the mobile device. The adapter module is for sending an authorization request for funds to the mobile device using short-range communication technology. The mobile device then forwards the authorization request for funds to the server using long-range communication technology. The server is for sending an authorization grant for funds to the mobile device using long-range communication technology. The mobile device the forwards the authorization grant for funds to the adapter module using short-range communication technology. The payment accepting unit dispenses the at least one product or service in response to receiving user input to the payment accepting unit input mechanism if the adapter module has received the authorization grant.

The adapter module may have security technology and the server may have security technology. The authorization request may be secured by the adapter module security technology to create a secured authorization request. The authorization grant may be secured by the server security technology to create a secured authorization grant. The secured authorization request and the secured authorization grant are preferably undecipherable to the mobile device.

The adapter module and the server may share a unique private key. The adapter module may have encryption/decryption technology and the server may have encryption/decryption technology. The authorization request may be encrypted by the adapter module encryption/decryption technology using the unique private key to create an encrypted authorization request. The encrypted authorization request may be decrypted by the server encryption/decryption technology using the unique private key. The authorization grant may be encrypted by the server encryption/decryption technology using the unique private key to create an encrypted authorization grant. The encrypted authorization grant may be decrypted by the adapter module encryption/decryption technology using the unique private key. The encrypted authorization request and the encrypted authorization grant are preferably undecipherable to the mobile device.

The adapter module is preferably surrounded by two zones, a payment zone and an authorization zone, wherein the payment zone is within the authorization zone. The adapter module sends the authorization request when the mobile device is within the authorization zone. The mobile device forwards the authorization grant for funds to the adapter module when the mobile device is within the payment zone. A third zone possible zone is a communication zone, the authorization zone being within the communication zone. The mobile device preferably receives advertising broadcast signals from the adapter module within the communication zone.

The system may have a hands-free mode in which the payment accepting unit dispenses the at least one product or service without the user interacting with the mobile device. A display of the payment accepting unit may be used for displaying funds available based on information from the authorization grant. The input mechanisms of the payment accepting unit may be used for receiving user selection input when the user interacts with the input mechanisms to select the at least one product or service to be dispensed.

The adapter module may be an in-line dongle for in-line insertion within a multi-drop bus of the payment accepting unit. Further, the payment accepting unit may have a multi-drop bus to a payment receiving mechanism. The multi-drop bus may have a male adapter and a female adapter. The adapter module may have a male adapter and a female adapter. The adapter module is preferably insertable in serial with the multi-drop bus by connecting the male adapter of the adapter module to the female adapter of the multi-drop bus and by connecting the female adapter of the adapter module to the male adapter of the multi-drop bus.

Also described herein is a method for using a mobile-device-to-machine payment system for facilitating a cashless transaction for purchase of at least one product or service by a user from a payment accepting unit may have input mechanisms. The user may have a mobile device having both short-range communication technology and long-range communication technology. The payment accepting unit is preferably capable of dispensing at least one product or service. The method includes the steps of: (a) sending an authorization request for funds to the mobile device using short-range communication technology of an adapter module associated with the payment accepting unit; (b) receiving the authorization request for funds from the short-range communication technology of the adapter module at the short-range communication technology of the mobile device; (c) forwarding the

authorization request for funds to a server using the long-range communication technology of the mobile device; (d) receiving the authorization request for funds from the long-range communication technology of the mobile device at long-range communication technology of the server; (e) sending an authorization grant for funds to the mobile device using the long-range communication technology of the server; (f) receiving the authorization grant for funds from long-range communication technology of the server at the long-range communication technology of the mobile device; (g) forwarding the authorization grant for funds to the adapter module using the short-range communication technology of the mobile device; and (h) receiving the authorization grant for funds from the short-range communication technology of the mobile device at short-range communication technology of the adapter module. At least one product or service may then be dispensed from the payment accepting unit in response to receiving user input to the payment accepting unit input mechanism if the adapter module has received the authorization grant.

The method may include the steps of securing the authorization request using security technology associated with the adapter module to create a secured authorization request, securing the authorization grant using security technology associated with the server to create a secured authorization grant, and the secured authorization request and the secured authorization grant are preferably undecipherable to the mobile device.

The method may include the steps of (a) sharing a unique private key between the adapter module and the server, (b) encrypting using the unique private key the authorization request using encryption/decryption technology associated with the adapter module to create an encrypted authorization request, (c) decrypting using the unique private key the encrypted authorization request using encryption/decryption technology associated with the server, (d) encrypting using the unique private key the authorization grant using the encryption/decryption technology associated with the server to create an encrypted authorization grant, (e) decrypting using the unique private key the encrypted authorization grant using encryption/decryption technology associated with the adapter module, and (e) the encrypted authorization request and the encrypted authorization grant are preferably undecipherable to the mobile device.

The method may include the steps of (a) surrounding the adapter module with two zones, a payment zone and an authorization zone, wherein the payment zone is within the authorization zone, (b) the adapter module sending the authorization request when the mobile device is within the authorization zone; and (c) the mobile device forwarding the authorization grant for funds to the adapter module when the mobile device is within the payment zone. The adapter module may also include a third zone, a communication zone, wherein the authorization zone is within the communication zone. The mobile device receives advertising broadcast signals from the adapter module within the communication zone.

The method may have a hands-free mode in which the payment accepting unit dispenses the at least one product or service without the user interacting with the mobile device. The method may further include the steps of (a) displaying funds available on a display of the payment accepting unit, the funds available may be based on information from the authorization grant; and (b) receiving user selection input when the user interacts with input mechanisms of the payment accepting unit to select the at least one product or service to be dispensed.

The method may include the step of inserting the adapter module as an in-line dongle for in-line insertion within a multi-drop bus of the payment accepting unit.

The method may include the step of inserting the adapter module in serial with the multi-drop bus by connecting a male adapter of the adapter module to a female adapter of the multi-drop bus and by connecting a female adapter of the adapter module to a male adapter of the multi-drop bus.

The subject matter described herein is particularly pointed out and distinctly claimed in the concluding portion of this specification. Objectives, features, combinations, and advantages described and implied herein will be more readily understood upon consideration of the following detailed description of the invention, taken in conjunction with the accompanying drawings.

BRIEF DESCRIPTION OF THE SEVERAL VIEWS OF THE DRAWINGS

FIG. **1** is a schematic diagram that shows three zones: a first "communication zone" (e.g. "Bluetooth range"), a second "authorization zone," and a third "payment zone." The payment zone (that can't be zero) is smaller than or equal to (overlapping completely) the authorization zone.

FIG. **2** is a schematic diagram that shows the three zone of FIG. **1** with multiple users therein, the mobile-device-to-machine payment systems providing for managing and resolving multiple users.

FIG. **3** is a table that illustrates the hands-free credit or alert user principle.

FIG. **4** is a flow chart showing the logging RSSI at User Input.

FIG. **5** is a block schematic that shows elements of the system including, but not limited to, the adapter module, the machine, the mobile device, and exemplary servers, as well as communications therebetween.

FIG. **6** is a block schematic that shows there are three areas of encryption used (each is bi-directional) between the adapter module, the machine, the mobile device, and/or exemplary servers.

FIG. **7** is a block diagram that communications, messaging, vending sequence, and purchase flow between the adapter module, the mobile device, and a system management server.

FIG. **8**A is a timing schematic diagram that shows additional elements and features of the system including, but not limited to, communications medium, messaging, vending sequence, and purchase flow, when the user enters the communication zone (Bluetooth Range).

FIG. **8**B is a timing schematic diagram that shows additional elements and features of the system including, but not limited to, communications medium, messaging, vending sequence, and purchase flow, when the user enters the Authorization Zone.

FIG. **8**C is a timing schematic diagram that shows additional elements and features of the system including, but not limited to, communications medium, messaging, vending sequence, and purchase flow, when the user enters the Payment Zone and, in particular, detailing the hands-free mode alternative and the swipe mode alternative.

FIG. **8**D is a timing schematic diagram that shows additional elements and features of the system including, but not limited to, communications medium, messaging, vending sequence, and purchase flow, in a vending transaction including a loop for multiple transactions.

FIG. **8**E is a timing schematic diagram that shows additional elements and features of the system including, but not

limited to, communications medium, messaging, vending sequence, and purchase flow, in the Login mode.

FIG. **8**F is a timing schematic diagram that shows additional elements and features of the system including, but not limited to, communications medium, messaging, vending sequence, and purchase flow, during Module bootup.

FIG. **8**G is a timing schematic diagram that shows additional elements and features of the system including, but not limited to, communications medium, messaging, vending sequence, and purchase flow, during Account Check/Update.

FIGS. **9**A-**9**E are flow charts that show exemplary steps and features of the system including, but not limited to, communications, messaging, vending sequence, and purchase flow.

FIGS. **10**A-**10**D show an exemplary mobile device with a graphical representation of an exemplary mobile application shown thereon, the mobile application being used as part of the mobile-device-to-machine payment systems.

FIG. **11** is a perspective view of the exemplary first preferred in-line dongle adapter module.

FIG. **12** is a front plan view of the in-line dongle adapter module of FIG. **11**.

FIG. **13** is a back plan view of the in-line dongle adapter module of FIG. **11**.

FIG. **14** is a first side view of the in-line dongle adapter module of FIG. **11**, the second side being a mirror image of that shown.

FIG. **15** is a first end view of a connector receptacle of the in-line dongle adapter module of FIG. **11**.

FIG. **16** is a second end view of a connector receptacle of the in-line dongle adapter module of FIG. **11**.

FIG. **17** is a perspective view taken from the first end of the in-line dongle adapter module of FIG. **11**, the connectors and cables between which the in-line dongle adapter module is inserted being shown in broken lines for environmental purposes.

FIG. **18** is a perspective view taken from the second end of the in-line dongle adapter module of FIG. **11**, the connectors and cables between which the in-line dongle adapter module is inserted being shown in broken lines for environmental purposes.

FIG. **19** is a perspective view of the in-line dongle adapter module of FIG. **11** within a vending machine.

FIG. **20** is a perspective view of the exemplary second preferred in-line dongle adapter module.

FIG. **21** is a front plan view of the in-line dongle adapter module of FIG. **20**.

FIG. **22** is a back plan view of the in-line dongle adapter module of FIG. **20**.

FIG. **23** is a first side view of the in-line dongle adapter module of FIG. **20**, the second side being a mirror image of that shown.

FIG. **24** is a first end view of a connector receptacle of the in-line dongle adapter module of FIG. **20**.

FIG. **25** is a second end view of a connector receptacle of the in-line dongle adapter module of FIG. **20**.

FIG. **26** is a perspective view taken from the first end of the in-line dongle adapter module of FIG. **20**, the connectors and cables between which the in-line dongle adapter module is inserted being shown in broken lines for environmental purposes.

FIG. **27** is a perspective view taken from the second end of the in-line dongle adapter module of FIG. **20**, the connectors and cables between which the in-line dongle adapter module is inserted being shown in broken lines for environmental purposes.

FIG. **28** is a perspective view of the in-line dongle adapter module of FIG. **20** within a vending machine.

FIG. **29** is a perspective view of the exemplary third preferred in-line dongle adapter module with a gap indicating the in-line dongle adapter module can be of any length.

FIG. **30** is a front plan view of the in-line dongle adapter module of FIG. **29**.

FIG. **31** is a back plan view of the in-line dongle adapter module of FIG. **29**.

FIG. **32** is a first side view of the in-line dongle adapter module of FIG. **29**, the second side being a mirror image of that shown.

FIG. **33** is a first end view of a connector receptacle of the in-line dongle adapter module of FIG. **29**.

FIG. **34** is a second end view of a connector receptacle of the in-line dongle adapter module of FIG. **29**.

FIG. **35** is a perspective view taken from the first end of the in-line dongle adapter module of FIG. **29**, the connectors and cables between which the in-line dongle adapter module is inserted being shown in broken lines for environmental purposes.

FIG. **36** is a perspective view taken from the second end of the in-line dongle adapter module of FIG. **29**, the connectors and cables between which the in-line dongle adapter module is inserted being shown in broken lines for environmental purposes.

FIG. **37** is a perspective view of the in-line dongle adapter module of FIG. **29** within a vending machine.

FIG. **38** is a perspective view of the exemplary fourth preferred in-line dongle adapter module with two vertical gaps indicating the in-line dongle adapter module can be of any width.

FIG. **39** is a front plan view of the in-line dongle adapter module of FIG. **38**.

FIG. **40** is a back plan view of the in-line dongle adapter module of FIG. **38**.

FIG. **41** is a first side view of the in-line dongle adapter module of FIG. **38**, the second side being a mirror image of that shown.

FIG. **42** is a first end view of a connector receptacle of the in-line dongle adapter module of FIG. **38**.

FIG. **43** is a second end view of a connector receptacle of the in-line dongle adapter module of FIG. **38**.

FIG. **44** is a perspective view taken from the first end of the in-line dongle adapter module of FIG. **38**, the connectors and cables between which the in-line dongle adapter module is inserted being shown in broken lines for environmental purposes.

FIG. **45** is a perspective view taken from the second end of the in-line dongle adapter module of FIG. **38**, the connectors and cables between which the in-line dongle adapter module is inserted being shown in broken lines for environmental purposes.

FIG. **46** is a perspective view of the in-line dongle adapter module of FIG. **38** within a vending machine.

FIG. **47** is a perspective view of the exemplary fifth preferred in-line dongle adapter module and, specifically, the longitudinal center portion thereof, the dashed line depiction of the sides indicating the sides of the in-line dongle adapter module can be of any shape or curvature.

FIG. **48** is a front plan view of the in-line dongle adapter module of FIG. **47**.

FIG. **49** is a back plan view of the in-line dongle adapter module of FIG. **47**.

FIG. **50** is a first side view of the in-line dongle adapter module of FIG. **47**, the second side being a mirror image of that shown.

FIG. **51** is a first end view of a connector receptacle of the in-line dongle adapter module of FIG. **47**.

FIG. **52** is a second end view of a connector receptacle of the in-line dongle adapter module of FIG. **47**.

FIG. **53** is a perspective view taken from the first end of the in-line dongle adapter module of FIG. **47**, the connectors and cables between which the in-line dongle adapter module is inserted being shown in broken lines for environmental purposes.

FIG. **54** is a perspective view taken from the second end of the in-line dongle adapter module of FIG. **47**, the connectors and cables between which the in-line dongle adapter module is inserted being shown in broken lines for environmental purposes.

FIG. **55** is a perspective view of the in-line dongle adapter module of FIG. **47** within a vending machine.

FIG. **56** is a block diagram of an exemplary adapter module.

FIG. **57** is a block diagram of an exemplary mobile device.

FIG. **58** is a block diagram of an exemplary server.

DETAILED DESCRIPTION OF THE INVENTION

Disclosed herein are mobile-device-to-machine payment systems and, more specifically, mobile-device-to-machine payment systems over a non-persistent network connection. The mobile-device-to-machine payment systems disclosed herein focus on the unattended retail space (e.g. a payment accepting unit **120** or machine **120**). More specifically, mobile-device-to-machine payment systems disclosed herein allow a user (having a mobile device **150** with a mobile application **140** thereon) to make a cashless purchase from a payment accepting unit **120** (having an adapter module **100** associated therewith).

The mobile-device-to-machine payment systems described herein can be implemented with one or more of the following features: easy installation feature, a non-persistent network connection feature; a manual (swipe to pay) mode feature; a hands-free mode feature; and a multiple vending transactions (multi-vend) feature.

Easy Installation Installation is very easy, requires no tools, requires no configuration, and takes as little as 30 seconds. This is accomplished by using an adapter module **100** such as an in-line dongle (a hardware device with software thereon) design for in-line insertion within a multi-drop bus (MDB) of a payment accepting unit (e.g. a vending machine). Installation is as simple as "powering down" (turning off) the machine **120**, identifying the "wire" that connects with a payment receiving mechanism (e.g. the coin mechanism), disconnecting the wire (so that there are two loose ends, such as a male connection end or adapter of an MDB and a female connection end or adapter of an MDB), plugging (inserting) the adapter module **100** in serial ("in-line") with the wire (for example, connecting the MDB female adapter to a male adapter of the adapter module **100** and connecting the MDB male adapter to a female adapter of the adapter module **100**), tucking the wire and the installed adapter module **100** back into position, and "powering up" (turning on) the machine **120**. Most vending machines made since 1995 have this industry standard MDB technology that would allow this easy 30-second installation. On machines without MDB technology, the adapter module **100** can be configured or designed to work with other serial protocols or activate a switch. In essence the adapter module **100** simulates establishing payment on payment accepting unit **120** in much the same manner as other alternative forms of payment (e.g. cash).

Non-persistent Network Connection: Although payment accepting units (or "machines") that accept only cash (e.g. paper currency and coins) may not require a connection (persistent or non-persistent) to a network, traditional payment accepting units that accept cashless payments (e.g. credit cards, debit cards, and alternative mobile device payment methods using, for example, smart phones) require a persistent connection to a network (wired or wireless) to facilitate the cashless payments. In other words, without a persistent (ongoing or accessible on demand) network connection, traditional payment accepting units cannot accept cashless payments. Most traditional payment accepting units that accept cashless payments include the technology to accomplish this persistent network connection that allows them to connect to a remote server. If the network connection to a traditional machine is temporarily interrupted, cashless payments will be temporarily unavailable. If the machine is located in a location where no signal is available, cashless payments will not be possible. The Whigham reference, the Offer reference, and the Belfer reference disclose alternative payment accepting units that accept cashless payments by using the user's cellular phone to allow the user to manually input coding to a remote server and, thereby act as an on-demand bridge network connection. These references, however, require significant user interaction with the cellular telephone to effectuate the transaction. In addition to using a mobile device **150** as an intermediary between the payment accepting units **120** and the server **130**, mobile-device-to-machine payment systems described herein minimize (manual mode) or eliminate (hands-free mode) user interaction with the mobile device **150**. Further, some mobile-device-to-machine payment systems described herein facilitate the acceptance of cashless payments without requiring any network connection near the payment accepting unit **120**. Mobile-device-to-machine payment systems described herein that are located in a remote location where no signal is available, therefore, can accept cashless payments.

Manual (Swipe to Pay) Mode: Using a "swipe to pay" feature (or just "swipe") refers to a user's action implemented on his mobile device **150** in which he quickly brushes his finger (or other pre-determined interaction) on the mobile device's touch screen **152** (or other input device associated with the mobile device **150**). From the user's perspective, when the user is within range, a pre-installed mobile application **140** automatically connects to the payment accepting unit **120** (e.g. a vending machine). The mobile application **140** might display (on the touch screen **152**) a prepaid balance that the user "swipes" to transfer payment to the payment accepting unit **120**. The user could observe the transferred funds on the touch screen **152** of the mobile device **150** and/or on the display **122**, **124** of the payment accepting unit **120**. The transaction is completed just as if cash was inserted in the machine **120** with the user inputting his selection on the payment accepting unit **120** and the payment accepting unit **120** dispensing the product or service. After the selection is made, the change is returned to the mobile device **150** and this may be shown on the touch screen **152** of the mobile device **150**.

Hands-Free Mode: A "hands-free pay" feature (or just "hands-free") would most likely be used with "favorite" payment accepting units **120** (e.g. a vending machine at work or school). From the user's perspective, he would approach the favorite payment accepting unit **120** and notice that the display **122**, **124** of the payment accepting unit **120** showed funds available, he would select the product or service using the payment accepting unit's input mechanisms (e.g. buttons **126** or a touch screen display **124** shown in FIG. **19**), and he

would retrieve his dispensed services or products. It would be that simple. More specifically, when the user is within range, a pre-installed mobile application **140** automatically connects to the payment accepting unit **120** (e.g. a vending machine). The user may leave the mobile device **150** in a pocket, purse, briefcase, backpack, or other carrier. As the user approaches the payment accepting unit **120** and is in approximately "arms-length" distance (e.g. 3 to 5 feet), the user could observe the transferred funds on the display **122**, **124** of the payment accepting unit **120**. The transaction is completed just as if cash was inserted in the machine **120** with the user inputting his selection on the payment accepting unit **120** and the payment accepting unit **120** dispensing the product or service. After the selection is made, the change is returned to the mobile device **150**. FIG. **3** details when the hands-free mode would be available.

Multiple Vending Transactions (Multi-Vend): Both the "swipe to pay" feature and the "hands-free pay" feature could be used multiple times in sequence (implemented, for example, as a loop) so that a user may make multiple purchases. After making his first selection and receiving his product (or service), the user would observe that additional funds were available on the display **122**, **124** on the payment accepting unit **120**. He could make another selection (or multiple selections) and receive additional product(s) (or service(s)). More specifically, the display **122**, **124** may reset as if the transaction is complete, but then, because the user is still standing in range, the mobile application **140** would send another credit to the payment accepting unit **120**, allowing for a second purchase. When the walks away, the system clears (e.g. returns unused funds to the mobile application **140** on the mobile device **150**.

The features described above, alone or in combination with other features described herein will revolutionize the hundred billion dollar automated retail industry. The exemplary hardware is very low cost and there are no reoccurring fees because no cellular connection is required on the machine **120**. Using the mobile-device-to-machine payment systems described herein, operators can increase frequency of visits and items sold with each visit.

Mobile-device-to-machine payment systems described herein may be implemented as an apparatus and/or method for enabling payments to a machine **120** via a mobile device **150**. Exemplary mobile-device-to-machine payment systems may be better understood with reference to the drawings, but the shown mobile-device-to-machine payment systems are not intended to be of a limiting nature.

DEFINITIONS

Before describing the mobile-device-to-machine payment systems and the figures, some of the terminology should be clarified. Please note that the terms and phrases may have additional definitions and/or examples throughout the specification. Where otherwise not specifically defined, words, phrases, and acronyms are given their ordinary meaning in the art. The following paragraphs provide some of the definitions for terms and phrases used herein.

Adapter Module **100**: As shown in FIGS. **1** and **2**, the adapter module **100** is a physical device that is installed in a machine **120** (a payment accepting unit **120**). The shown exemplary adapter module **100** is an in-line dongle (a hardware device with software thereon) device that may be inserted in-line within a multi-drop bus (MDB) of a machine **120**. The adapter module **100** bridges the communication between the machine **120** and a mobile device **150**. Although described as a unique component, it should be noted that the adapter module **100** could be implemented as a plurality of devices or integrated into other devices (e.g. components of a machine **120**). In its unique component form, the adapter module **100** can be easily inserted into a machine **120** so that the machine **120** is able to perform new features with the assistance of the adapter module **100**. FIG. **56** shows exemplary components associated with the adapter module **100**. The shown example may be divided into multiple distinct components that are associated with each other or the example may be incorporated into or drawn from other technology (e.g. a computer or a payment accepting unit) as long as the components are associated with each other.

Mobile Device **150** and Application **140** (also referred to as a "mobile application," "mobile app," or "app"): In general, a mobile device **150** may be a user's personal mobile device **150**. The mobile device **150** (with a mobile application **140** thereon) acts as a communication bridge between the adapter module **100** (associated with a payment accepting unit **120**) and the server **130**. The mobile device **150** and application **140**, however, are not "trusted" in that the communications (transmissions) it passes are encrypted. Encrypted (secured) communications are undecipherable (unencryptable, unreadable, and/or unuseable) by the mobile device **150**. This keeps the passed communications secured and safe from hacking. Exemplary mobile devices include, but are not limited to smart phones, tablet or laptop computers, or personal digital assistants (PDAs), smart cards, or other technology (e.g. a hardware-software combination) known or yet to be discovered that has structure and/or capabilities similar to the mobile devices described herein. The mobile device **150** preferably has an application **140** (app **140**) running on it. The term "app" is used broadly to include any software program(s) capable of implementing the features described herein. FIGS. **10**A-**10**D show exemplary mobile devices **150** with associated apps **140** associated therewith. It should be noted that the phrase "mobile device" can be assumed to include the relevant app unless specifically stated otherwise. Similarly, it should be noted that an "app" can be assumed to be running on an associated mobile device unless specifically stated otherwise. FIG. **57** shows exemplary components associated with the mobile device **150**. The shown example may be divided into multiple distinct components that are associated with each other or the example may be incorporated into or drawn from other technology (e.g. the cell phone itself) as long as the components are associated with each other.

Payment Accepting Unit **120** (or Machine **120**): A payment accepting unit **120** (or machine **120**) is equipment that requires payment for the dispensing of an product and/or service. Payment accepting units **120** may be vending machines, parking meters, toll booths, laundromat washers and dryers, arcade games, kiosks, photo booths, toll booths, transit ticket dispensing machines, and other known or yet to be discovered payment accepting units **120**. Some payment accepting units **120** can accept cashless payments (payments other than cash (paper currency and coins)) by accepting payment from, for example, credit cards, debit cards, and mobile devices.

Network Connections: For purposes of this discussion, a persistent network connection is a wired or wireless communications connection that is ongoing (e.g. a dedicated connection, a dedicated online connection, and/or

a hardwired connection) or accessible on demand (e.g. the ability for the machine to make a temporary connection to a server or the ability for the user to contact a server from his mobile device). Typically the persistent network connection has been conducted over "long-range communication technology" (e.g. hard-wired, telephone network technology, cellular technology, WiFi technology, wide area network (WAN), local area network (LAN), or any wired or wireless communication technology over the internet that is known or yet to be discovered). Traditionally, machines that accept payment other than cash require a persistent (ongoing or accessible on demand) connection to a network to facilitate payment. This is true for machines that accept, for example, credit cards and debit cards. The payment accepting units **120** described herein do not require a traditional persistent network connection. The user's mobile device **150** acts as a communication bridge between the adapter module **100** and the server **130**. Communications between user mobile devices **150** and the servers (e.g. a system management server **130** and/or a funding source server **160**) take place using long-range communication technology. Communications between user mobile devices **150** and the adapter module **100** of the payment accepting unit **120** take place using "short-range communication technology" (e.g. Bluetooth (e.g. Bluetooth 4.0, Bluetooth Smart, Bluetooth LE (Low Energy), near-field communication, Ultra Wideband (UWB), RFID, infrared wireless, induction wireless, or any wired or wireless technology that could be used to communicate a small distance (e.g. approximately a hundred feet or closer) that is known or yet to be discovered). Neither the adapter module **100** nor the payment accepting unit **120**, therefore require a traditional persistent long-range wireless network connection. The exemplary communications technology shown in the figures may be replaced with alternative like communications technology and, therefore, specific shown communications technologies are not meant to be limiting. For example WiFi technology could be replaced with another long-range communication technology.

Server: A server is the host processing server that may be operated by the company running the system. For each user, the server **130** preferably maintains at least one "virtual wallet" having at least one "balance" (which can be $0) of designated funds for which the server **130** keeps an accounting. The balance may represent, for example, "cash" or it may be a "promotional value" that represents funds that may be spent under certain circumstances. If these funds begin to be depleted, the user may be notified (e.g. via the application **140** on the mobile device **150**) that additional funds need to be designated and/or transferred. Alternatively, funds from other sources (e.g. the funding source server **160**) may be automatically transferred to restore a predetermined balance. The balance may also be increased based on a promotion (e.g. points earned or coupons). As shown in FIG. **58**, the server includes appropriate processors **950**, memory **960** (which would keep an accounting of the user's balance in a manner similar to a gift card), and communication systems **970**. As shown, the communications unit **970** of the server **130** includes long-range communication technology (e.g. cellular technology and WiFi mechanisms). The server **130** also includes a security unit **955** for encrypting and decrypting messages. The server **130** receives an AuthRequest from the adapter module **100** (via a mobile device **150**) and, if funds are available, returns the AuthGrant for funds. FIG. **58** shows exemplary components associated with the server **130**. The shown example may be divided into multiple distinct components that are associated with each other or the example may be incorporated into or drawn from other technology (e.g. a computer or a main frame) as long as the components are associated with each other.

Advertise Presence: Each adapter module **100** advertises its presence by broadcasting signals (advertising broadcast signals) to mobile devices in the zones **102**, **104**, **016**. Each adapter module **100** can listen to other adapter modules' advertisements

Received Signal Strength Indicator (RSSI): The adapter module **100** may have a self-calibrating signal strength to determine zone thresholds (e.g. a payment zone threshold). At the time the user selects an item (product or service) from the payment accepting unit **120**, the Received Signal Strength Indicator (RSSI) is logged. At this moment, it is presumed the user is within "arms-length" (which may be a predetermined length approximating the distance of a user standing in front of a machine for the purpose of making a purchase) from the payment accepting unit **120**. Mathematical computation (In-Range Heuristics) is conducted to derive the optimal RSSI threshold at which point payment should be triggered by an application **140** on a mobile device **150**. The threshold may be payment accepting unit specific and can vary over a period of time. This optimal zone threshold is preferably reported to the mobile device **150** during an initial handshake.

In-Range Heuristics: Mathematical computation that determines the RSSI threshold to determine when a user is in the authorization zone **104** and/or payment zone **102**. This computation can take into consideration numerous historical data points as well as transaction specific information such as which mobile device **150** is being used, payment accepting unit type, among other factors. Preferably the RSSI is logged while the user is making his selection (this is the one time in the entire process that the user definitely will be "in range" (e.g. they will be arm's length from the machine **120** because they are physically interacting with the machine **120**). The type of user mobile device **150**, accelerometer data (e.g. is the user moving or stationary), and/or other information may also be logged while the user is making his selection. The adapter module **100** can give a reference RSSI for the payment zone **102** for the machine **120**, and the application **140** can make a +/– adjustment based on the specific mobile device **150** on which it is installed. Over a period of time, the system continues to improve itself based on additional data points.

Authorization Request (AuthRequest): When a user enters the authorization zone **104**, the mobile device **150** notifies the adapter module **100** and the adapter module **100** sends the secured authorization request (e.g. the encrypted authorization request) as a "message" (also referred to as a communication or transmissions) to the server **130** via the mobile device **150**. Encryption may be performed by a security unit **755** (security technology that may be associated with the processing unit **750** and/or the memory **760**). Significantly, the AuthRequest is a request for authorization of funds, not a request for authorization of a transaction. The purpose of the funds is irrelevant to the server **30**.

Authorization Grant Token (AuthGrant): This is a "message" (also referred to as a communication or transmis-

sions) encrypted by the security unit **955** (security technology) of the server **130** with the unique private key for the adapter module **100**. The secured authorization grant (e.g. the encrypted authorization grant) is passed from the server **130** (via the mobile device **150**) to the adapter module **100** in the form of a message. The mobile device **150**, however, is not able to decrypt and read the message. The authorization grant is in response to the authorization request. The amount of the funds granted by the AuthGrant may be determined by factors including, but not limited to, the amount of funds available (or, if funds are not available, a mini-loan could be granted), a pre-authorized amount (e.g. set by the server, set by the user during set-up, set by the funding source, or a standard amount), limited by time (e.g. only a certain amount per hour, or a predetermined amount at specific times of the day), limited to the maximum amount of an item on the machine (or enough for two or three items in the machine), or one or more of these and other factors. Significantly, the AuthGrant makes the funds available, but does not authorize a transaction. The AuthGrant may have an associated expiration period in that it may expire if it is not used in a pre-determined time period. The length of time before the AuthGrant expires may be determined by factors including, but not limited to, the trustworthiness of the user (e.g. the user has a long history with the system or some known provider (e.g. credit card provider, bank, or credit union), the user has a good credit rating, or the user has a large wallet balance), a pre-authorized time period (e.g. set by the server, set by the user during set-up, set by the funding source, or a standard time period), limited by time (e.g. predetermined time periods at specific times of the day such as longer times during breakfast, lunch, and dinner), limited by the machine or the products or services sold in the machine, limited by the number of other users near the machine (e.g. if it is a crowded machine, the AuthGrant may expire faster), or one or more of these and other factors. The AuthGrant remains valid until it expires or some other event occurs to end its validity (e.g. the user cancels it). This means that under normal circumstances the mobile device **150** will hold the AuthGrant authorizing use of funds for a pre-determined time period that will allow the user sufficient time to make a purchase. The authorized amount may be considered to be the "wallet balance" that is held in a virtual "wallet."

Synchronization: Time may be synchronized to the adapter module **100** from the server **130**. The server **130** sends time information with encrypted messages and the adapter module **100** uses the time encoded in the messages for synchronization.

The mobile-device-to-machine payment systems and components thereof may have associated hardware, software, and/or firmware (a variation, subset, or hybrid of hardware and/or software). The term "hardware" includes at least one "processing unit," "processor," "computer," "programmable apparatus," and/or other known or yet to be discovered technology capable of executing instructions or steps (shown as processing unit **750** in FIG. **56**, processing unit **850** in FIG. **57**, and processing unit **950** in FIG. **58**). The term "software" includes at least one "program," "subprogram," "series of instructions," or other known or yet to be discovered hardware instructions or hardware-readable program code. Software may be loaded onto hardware (or firmware) to produce a "machine," such that the software executes on the hardware to create structures for implementing the functions described herein. Further, the software may be loaded onto the hardware (or firmware) so as to direct the mobile-device-to-machine payment systems (and components thereof) to function in a particular manner described herein or to perform a series of operational steps as described herein. "Hardware" such as the adapter module **100**, mobile device **150**, and payment accepting unit **120** may have software (e.g. programs and apps) loaded thereon. The phrase "loaded onto the hardware" also includes being loaded into memory (shown as memory **760** in FIG. **56**, memory **860** in FIG. **57**, and memory **960** in FIG. **58**) associated with or accessible by the hardware. The term "memory" is defined to include any type of hardware (or other technology)-readable media (also referred to as computer-readable storage medium) including, but not limited to, attached storage media (e.g. hard disk drives, network disk drives, servers), internal storage media (e.g. RAM, ROM, EPROM, FLASH-EPROM, or any other memory chip or cartridge), removable storage media (e.g. CDs, DVDs, flash drives, memory cards, floppy disks, flexible disks), firmware, and/or other known or yet to be discovered storage media. Depending on its purpose, the memory may be transitory and/or non-transitory. Appropriate "messages," "communications," "signals," and/or "transmissions" (that includes various types of information and/or instructions including, but not limited to, data, commands, bits, symbols, voltages, currents, electromagnetic waves, magnetic fields or particles, optical fields or particles, and/or any combination thereof) over appropriate "communication paths," "transmission paths," and other means for signal transmission including any type of connection between two elements on the system (the system including, for example, the adapter module **100**, mobile device **150**, payment accepting unit **120**, hardware systems and subsystems, and memory) would be used as appropriate to facilitate controls and communications.

It should be noted that the terms "programs" and "subprograms" are defined as a series of instructions that may be implemented as software (i.e. computer program instructions or computer-readable program code) that may be loaded onto a computer to produce a "machine," such that the instructions that execute on the computer create structures for implementing the functions described herein or shown in the figures. Further, these programs and subprograms may be loaded onto a computer so that they can direct the computer to function in a particular manner, such that the instructions produce an article of manufacture including instruction structures that implement the function specified in the flow chart block or blocks. The programs and subprograms may also be loaded onto a computer to cause a series of operational steps to be performed on or by the computer to produce a computer implemented process such that the instructions that execute on the computer provide steps for implementing the functions specified in the flow chart block or blocks. The phrase "loaded onto a computer" also includes being loaded into the memory of the computer or a memory associated with or accessible by the computer. Separate, albeit interacting, programs and subprograms may be associated with the adapter modules **100**, the server **130**, and the mobile device **150** (including the mobile application **140**) and these programs and subprograms may be divided into smaller subprograms to perform specific functions.

The terms "messages," "communications," "signals," and/or "transmissions" include various types of information and/or instructions including, but not limited to, data, commands, bits, symbols, voltages, currents, electromagnetic waves, magnetic fields or particles, optical fields or particles, and/or any combination thereof. Appropriate technology may be used to implement the "communications," "signals," and/or "transmissions" including, for example, transmitters, receivers, and transceivers. "Communications," "signals," and/or "transmissions" described herein would use appropriate technology for their intended purpose. For example, hard-wired communications (e.g. wired serial communications) would use technology appropriate for hard-wired communications, short-range communications (e.g. Bluetooth) would use technology appropriate for close communications, and long-range communications (e.g. WiFi or Cellular) would use technology appropriate for remote communications over a distance. Appropriate security (e.g. SSL or TLS) for each type of communication is included herein. Security units **755** and **955** include technology for securing messages. The security technology may be, for example, encryption/decryption technology (e.g. software or hardware). Although encryption/decryption is discussed primarily as being performed using a unique private key, alternative strategies include, but are not limited to encryption/decryption performed using public/private keys, or other encryption/decryption strategies known or yet to be discovered. Appropriate input mechanisms and/or output mechanisms, even if not specifically described, are considered to be part of the technology described herein. The exemplary communications unit **770** (shown in FIG. **56**) of the adapter module **100** is shown as including appropriate input and output mechanisms **772**, **774** that may be implemented in association (e.g. directly or indirectly in functional communication) with male and female adapters **720**, **730** of the adapter module **100**. The exemplary communications unit **870** (shown in FIG. **57**) of the mobile device **150** includes mechanisms for both long-range communications (shown as Cellular and/or WiFi mechanisms **872**) for communicating with the server **130** and short-range communications (shown as Bluetooth mechanisms **876**) for communicating with the adapter module **100**.

When used in relation to "communications," "signals," and/or "transmissions," the terms "provide" and "providing" (and variations thereof) are meant to include standard means of provision including "transmit" and "transmitting," but can also be used for non-traditional provisions as long as the "communications," "signals," and/or "transmissions" are "received" (that can also mean obtained). The terms "transmit" and "transmitting" (and variations thereof) are meant to include standard means of transmission, but can also be used for non-traditional transmissions as long as the "communications," "signals," and/or "transmissions" are "sent." The terms "receive" and "receiving" (and variations thereof) are meant to include standard means of reception, but can also be used for non-traditional methods of obtaining as long as the "communications," "signals," and/or "transmissions" are "obtained."

The term "associated" is defined to mean integral or original, retrofitted, attached, connected (including functionally connected), positioned near, and/or accessible by. For example, if the user interface (e.g. a traditional display **122** (FIG. **19**), a touch screen display **124** (FIG. **19**), a key pad **126** (FIG. **19**), buttons **126** (FIG. **19**, shown as part of the key pad **126**), a keyboard (not shown), and/or other input or output mechanism) is associated with a payment accepting unit **120**, the user interface may be original to the payment accepting unit **120**, retrofitted into the payment accepting unit **120**, attached to the payment accepting unit **120**, and/or a nearby the payment accepting unit **120**. Similarly, adapter modules **100** may be associated with payment accepting units **120** in that the adapter modules **100** may be original to the payment accepting unit **120**, retrofitted into the payment accepting unit **120**, attached to the payment accepting unit **120**, and/or a nearby the payment accepting unit **120**.

It should be noted that relative terms are meant to help in the understanding of the technology and are not meant to limit the scope of the invention. Similarly, unless specifically stated otherwise, the terms used for labels (e.g. "first," "second," and "third") are meant solely for purposes of designation and not for order or limitation. The term "short" in the phrase "short-range" (in addition to having technology specific meanings) is relative to the term "long" in the phrase "long-range."

The terms "may," "might," "can," and "could" are used to indicate alternatives and optional features and only should be construed as a limitation if specifically included in the claims.

It should be noted that, unless otherwise specified, the term "or" is used in its nonexclusive form (e.g. "A or B" includes A, B, A and B, or any combination thereof, but it would not have to include all of these possibilities). It should be noted that, unless otherwise specified, "and/or" is used similarly (e.g. "A and/or B" includes A, B, A and B, or any combination thereof, but it would not have to include all of these possibilities). It should be noted that, unless otherwise specified, the terms "includes" and "has" mean "comprises" (e.g. a device that includes, has, or comprises A and B contains A and B, but optionally may contain C or additional components other than A and B). It should be noted that, unless otherwise specified, the singular forms "a," "an," and "the" refer to one or more than one, unless the context clearly dictates otherwise.

System Overview

FIGS. **5**, **6**, and **7** together show exemplary major components of the mobile-device-to-machine payment system and the interactions therebetwen.

As shown, the adapter module **100** functionally connected bi-directionally to the payment accepting unit **120** via a wired serial connection such that no security is necessary. The adapter module **100** is also functionally connected bi-directionally to the mobile device **150** (and its installed mobile application **140**) via short-range communication technology (e.g. a Bluetooth connection). Because the mobile device **150** is not a "trusted" link (e.g. it could be hacked by a user), only secured communications (transmissions) are passed between the adapter module **100** and the mobile device **150**. This keeps the passed communications secured and safe from hacking. The mobile device **150** (and its installed mobile application **140**) is also functionally connected bi-directionally to a system management server **130** and/or a funding source server **160** via long-range communication technology (e.g. WiFi or Cellular connection) that preferably has appropriate security (e.g. SSL security). Security between the mobile device **150** and the system management server **130** has the advantage of protecting communications from the mobile device **150** to the system management server **130** that may include sensitive

data and may not be encrypted. The system management server **130** and the funding source server **160** may be connected via a wired Internet connection with SSL security. The system management server **130** may be connected via a wired Internet connection with SSL security to an operators' server **170**. Although not necessary to implement a purchase transaction, for other purposes (e.g. inventory), the operators' server **170** may be connected to the payment accepting unit **120** using a handheld computer sync or a cellular connection.

Also, a unique private key may be used to securely transmit encrypted messages between the adapter module **100** and the system management server **130** (although the encrypted transmissions would most likely be routed through the mobile device **150**). The server **130** stores a private key for each adapter module **100**, and this key is only known to the adapter module **100** and the server **130**. No intermediary is privy to this key (especially not the mobile device **150**). When the adapter module **100** and server **130** communicate messages (e.g. AuthRequest and AuthGrant), the security unit **755** of the adapter module **100** encrypts the message with its private key and passes the message to the mobile device **150**. The mobile device **150** (which preferably cannot decrypt the message) passes the encrypted message to the server **130**. The server **130** is able to decrypt the message using the security unit **955** of the adapter module **100** and the unique private key. The security unit **955** of the server **130** uses this same unique private key to encrypt messages to the adapter module **100** and sends the message to the mobile device **150** to relay to the adapter module **100** that is able to decrypt the message using the security unit **755** of the adapter module **100** and the unique private key.

FIG. **7** shows specific exemplary communications and messaging with an exemplary vending sequence (the numbers to the left of the communications and messaging) between the adapter module **100**, the mobile device **150**, and the system management server **130**. These communications are discussed in more detail in the discussion pertaining to the timing schematics (FIGS. **8**A-**8**G) and the flow charts (FIGS. **9**A-**9**E).

It should be noted that FIGS. **5**, **6**, and **7** are meant to be exemplary and to help in the understanding of the mobile-device-to-machine payment system. For example, the shown long-range communications technology may be replaced with alternative long-range communications technology known or yet to be discovered, the shown short-range communication technology may be replaced with alternative short-range communication technology known or yet to be discovered, and the shown security may be replaced with alternative security known or yet to be discovered. The shown connections are meant to be exemplary in that, for example, there may be intermediaries that are not shown. The shown components have been simplified in that, for example, only one mobile device **150** (or machine **120**, adapter module **100**, or server **130**) is shown where many may be included. Finally, the order of the steps may be changed and some steps may be eliminated.

Adapter Module

FIGS. **11**-**55** show exemplary adapter modules **100***a*-**100***e* (referred to generally as adapter modules **100**). These are relatively low cost hardware that are pre-configured to work with industry standard a multi-drop bus (MDB). On machines without MDB technology, the adapter module **100** can be configured or designed to work with other serial protocols or activate a switch. In essence the adapter module **100** simulates establishing payment on payment accepting unit **120** in much the same manner as other alternative forms of payment (e.g. cash).

The shown exemplary adapter modules **100** are preferably designed to be used as an in-line dongle for in-line insertion within, for example, a MDB of a machine **120**. The wire used in MDB technology uses male and female connection ends or adapters to allow the attachment of peripherals. In the case of a vending machine, the wire with the connection ends or adapters would be present to allow the attachment of a payment receiving mechanism (e.g. a coin mechanism). The MDB male and female adapters **700**, **710** may be separated (as shown in FIGS. **17**, **18**, **26**, **27**, **35**, **36**, **44**, **45**, **53**, and **54**). The adapter modules **100** have male and female adapters **720**, **730**. The adapter module may be plugged (inserted) in serial ("in-line") with the wire. For example, the MDB female adapter **710** may be connected to the male adapter **720** of the adapter module **100** and the MDB male adapter **700** may be connected to the female adapter **730** of the adapter module **100**. The resulting in-line configuration is shown in FIGS. **19**, **28**, **37**, **46**, and **55**. It should be noted that the adapter modules **100** are designed to allow pass-through communications so that if the mobile-device-to-machine payment systems is not enabled (e.g. for a particular purchase or simply turned off) the MDB functions as though the adapter module **100** is not there and the machine **120** can function normally.

Hands-Free

Summarily, if it is available, a hands-free mode, from the user's perspective, would allow the user to approach a favorite payment accepting unit **120** and notice that the display (e.g. the displays **122** or **124** shown in FIG. **19**) associated with the payment accepting unit **120** shows funds available (e.g. the wallet balance), he would select the product or service using input mechanisms (e.g. buttons **126** or a touch screen display **124** shown in FIG. **19**) associated with the payment accepting unit **120**, and he would retrieve his dispensed services or products.

During an initial handshake with the mobile device **150** (when the user is within range), the adapter module **100** reports to the mobile device **150** whether or not hands-free mode is available. If it is available, the installed mobile application **140** automatically connects to the payment accepting unit **120** without the user having to interact with the mobile device **150**. The user observes that funds are available on the display **122**, **124** of the payment accepting unit **120** and completes the purchase transaction as if cash was inserted in the machine **120** by inputting his selection on the payment accepting unit **120**. The payment accepting unit **120** dispenses the product or service. After the selection is made, the change is returned to the mobile device **150**.

Whether hands-free payment is available is determined by factors including, but not limited to whether if other mobile devices **150** are in range, if other adapter modules **100** are in range, if there are any alerts, if the payment trigger threshold is having wide variances and so deemed unstable, or if the payment accepting unit operator (e.g. a vending machine operator) has opted to disable hands-free mode for the payment accepting unit **120**. In the latter instance, operators can disable via a maintenance mobile device **150**, as well as through the operators' server **170** and/or the system management server **130**.

FIG. **3** is a table that showing exemplary considerations, conditions, or factors that may be used to determine whether the hands-free pay feature is available. Starting at the "Favorite?" column, this indicates whether the payment accepting unit **120** is a favorite machine. Preferably the hands-free pay feature is only available for use with "favorite" payment accepting units **120** (e.g. a vending machine at work or school). The "Alert" column has to do with whether there is some reason (e.g. there are too many users in range) that the

hands-free pay feature should not work and, if there is such a reason, the user will be notified (alerted) and may be able to use the manual mode to resolve the alert and/or complete the transaction. FIG. **3** shows situations in which a user is or is not able to make hands-free purchases from a machine **120** using a mobile application **140** on his mobile device **150**. It should be noted that the shown interface is meant to be exemplary. For example, some of the features could be automated or pre-selected. (It should be noted that the left hand column, the "Tab" column, relates to whether the selected tab on the mobile application **140** is "all" or "favorite." FIGS. **10**A-**10**D all show these tabs. Unlike the other columns in FIG. **3**, this column has more to do with the functionality and view of the application **140** than specifically with the hands-free feature. The tabs would allow a user to select whether he wanted to be alerted when he was in range of all payment accepting units **120** or just "favorite" payment accepting units **120** and the application **140** would show the appropriate view.)

Balance Display: An optional feature of the mobile-device-to-machine payment system that is particularly helpful in the hands-free mode (although it may be available in the manual mode and/or in a multiple-vend scenarios) is when the user's mobile device **150** sends "credit" to the payment accepting unit **120** (either via hands-free payment or through a manual swipe), the wallet balance is sent to the payment accepting unit **120** that is then displayed to the user on a display **122**, **124** of the machine **120**. This is particularly beneficial during hands-free mode when the user does not retrieve the mobile device **150** and, therefore, may not know the balance. Also, in a multiple-vend scenario the user would not have to calculate a remaining balance.

An exemplary hands-free and multiple-vend scenario with a balance display might be as follows: The user has $5.00 in his virtual wallet as that is the amount that has been authorized (the AuthGrant being stored on the mobile device **150**). He walks up to the payment accepting unit **120** and $5.00 is displayed on the display **122**, **124** of the payment accepting unit **120** since hands-free mode was enabled and credit was sent (e.g. via short-range communication technology) to the payment accepting unit **120**. The user makes a selection of $1.50 by interacting (e.g. pressing buttons) with the machine **120**. The item (product or service) is dispensed and the "change" is "returned" (e.g. via short-range communication technology) to the virtual wallet. But since user is still standing in the payment zone **102**, the remaining wallet balance of $3.50 is sent to the payment accepting unit **120** and displayed so that the user can now see he has a $3.50 balance. (It should be noted that the authorized funds may remain on the machine **120** and not be transferred back to the mobile device **150** between transactions.) The user decides to purchase a $1.50 item, and the transaction is completed as usual (e.g. by interacting with the machine **120**). Now the user is still standing in the payment zone **102** and he sees the wallet balance of $2.00 on the display **122**, **124** of the payment accepting unit **120**. Deciding he does not wish to purchase anything else, the user walks away. As he walks out of the payment zone **102**, the credit is cleared from the machine **120**. But he is left with the knowledge that his wallet balance is $2.00 even though he never touched the mobile device **150**. Communications between the payment accepting unit **120** and the adapter module **100** (via the mobile device **150**) handle the accounting incidental to the transaction. The remaining balance ($2.00) is technically stored on the server **130**, and may be reflected on the application **140** on the mobile device **150**.

Multiple Distinct Zones

As shown in FIGS. **1** and **2**, the functions performed by the adapter module **100** can be divided into distinct zones: a first "communication zone" (e.g. "Bluetooth range" **106**), a second "authorization zone" **104**, and a third "payment zone" **102**. The payment zone **102** (that can not be zero) is smaller than or equal to (overlapping completely) the authorization zone **104**. (Put another way, the payment zone **102** is within or coextensive with the authorization zone **104**.) The payment zone **102** is a subset of the authorization zone **104** with a ratio of the payment zone **102** to the authorization zone **104** ranging from 0.01:1 to 1:1. It is not necessarily a fixed ratio and can vary between different payment accepting units **120**, different mobile devices **150**, different users, and over time. While the zones **102**, **104**, **106** are depicted as having a uniform shape, the zones may not necessarily be uniform (or constant over time) in that the shape can vary. For example, the shape of the Bluetooth range **106** may vary depending on environmental conditions such as obstacles in the room and payment accepting unit **120** door/wall materials.

Bluetooth Range **106**: The outermost range is the Bluetooth range **106**. This is the area in which the adapter module **100** is able to broadcast its presence. In most situations, the Bluetooth range **106** is a passive range in that no actual data is exchanged between the mobile device **150** and the adapter module **100**. While in the Bluetooth range **106**, the mobile device **150** monitors the RSSI (Received Signal Strength Indicator).

Authorization Zone **104**: The middle region is the authorization zone **104**. This is a computed area based on the RSSI. As mentioned, the mobile device **150** monitors the RSSI while it is in the Bluetooth range **106**. When the RSSI reaches a certain predetermined threshold based on In-Range Heuristics, the mobile device **150** can be considered to be in the authorization zone **104**. In the authorization zone **104** the mobile device **150** establishes a connection to the adapter module **100** (e.g. a Bluetooth connection (FIG. **5**) with SSL protection (FIG. **6**)) and informs the adapter module **100** of its presence. After a successful handshake with the adapter module **100**, the mobile device **150** registers the adapter module **100** and the adapter module **100** requests an authorization to the server **130** via the mobile devices' network connection (e.g. a WiFi or cellular connection (FIG. **5**) with SSL protection (FIG. **6**)). It is important to note the mobile device **150** and the adapter module **100** have a non-exclusive relationship at this point. The adapter module **100** may collect registrations for all mobile devices **150** that are within the authorization zone **104**.

An authorization occurs in preparation for when the user enters the payment zone **102**. An authorization expires in a set period of time (for example, five minutes), so if the mobile device **150** is still in the authorization zone **104** at the time of expiration, the adapter module **100** submits for and receives another authorization. This will continue for a set number of times (for example, the limit may be three times to limit cases of numerous authorizations for a mobile device that may remain in the authorization zone **104** for an extended period of time without completing a transaction). Should authorization fail (for instance if the limit had been reached) prior to the user entering the payment zone **102**, the adapter module **100** will request authorization when the mobile device **150** enters the payment zone **102** (which adds a few seconds to the experience).

Payment Zone **102**: As a user enters the payment zone **102**, the mobile device **150** establishes exclusive control of the adapter module **100**. Once established, any other user in the payment zone **102** is put into a "waiting" status.

In the payment zone **102**, the payment can be triggered automatically if the system has and is in hands-free mode. In such instances, the mobile device **150** is running the app **140**

in background mode and will send credit to the payment accepting unit **120** without any explicit user interaction. The user completes the transaction on the payment accepting unit **120** in much the same manner as if cash had been inserted into the payment accepting unit **120** to establish credit. After the user completes the transaction (that may include one or more purchases), details of the transaction are preferably returned to the mobile device **150** and server **130** in separate messages. The message to the server **130** is preferably encrypted with the adapter module's **100** private key (FIG. **6**) to ensure data integrity. As shown in FIG. **7**, the "private key" coded message (Encrypted VendDetails) is preferably sent via the mobile device **150**. The message to the mobile device **150** may be sent solely for the purpose of closing the transaction. The transaction history and balance are updated server-side via the encrypted message sent to the server **130**.

The other mode of operation is manual mode. In manual mode, the user launches the mobile device **150** and is able to swipe to send payment to the payment accepting unit **120**. The user can also swipe back to cancel the payment. Like in hands-free mode, the purchase transaction is completed on the payment accepting unit **120** in the same manner as if cash were inserted into the payment accepting unit **120**. The mobile device **150** is only used to send payment. Selection is made directly on the payment accepting unit **120**.

Self-Calibrating Zone Threshold: A key, but optional feature, of the system is a self-calibrating payment zone RSSI threshold. Because RSSI can vary machine to machine, environment to environment, and device to device, having a fixed threshold at which payment is triggered can be problematic. The approach suggested herein is the creation of a self-calibrating threshold. When the user is interacting with the payment accepting unit **120** (such as when he makes his selection on the payment accepting unit **120**), the payment accepting unit **120** notifies the adapter module **100** and the adapter module **100** logs the conditions such as RSSI, type of user mobile device **150**, accelerometer data, and other information. It is at this point that it can be ascertained safely that the user is within arms-length from the payment accepting unit **120** (by necessity the user is arms-length because he is making some physical interaction with the payment accepting unit **120**). This is the only point in the entire transaction in which it can be certain that the user is within arms-length from the payment accepting unit **120**.

FIG. **4** shows a simplified set of exemplary steps involved when users enter the payment zone **102**. Specifically, FIG. **4** shows that credit is established **200** (this may have been done in the authorization zone **104**, but if not it would be handled in the payment zone **102**), that the user makes a selection using the machine **202**, that the machine notifies the adapter module of the selection **204**, that the adapter module (optionally) logs the RSSI **206**, and that the purchase process(es) continues **208**. Using the historically logged RSSI data, the adapter module **100** calculates one of several "average" RSSI using various mathematical models. This "average" could be a traditional average, a moving average, a weighted average, a median, or other similar summary function. The adapter module **100** could pre-process the historical data before running the function, such as to eliminate top and bottom data points, suspect data points, etc.

Optionally, during the handshake between the mobile device **150** and the adapter module **100**, the information transmitted to the adapter module **100** may include, for example, the model of the mobile device **150**. Using the received information pertaining to the mobile device models, the adapter module **100** can create multiple payment thresholds, one for each mobile device model. This allows for variances that may be inherent in different types of Bluetooth radios. An alternative to this method is for the adapter module **100** to broadcast a baseline payment zone threshold, and the mobile device **150** can use an offset from this baseline based on its specific model type. The payment zone thresholds (or baseline offsets) can be unique to specific types of mobile devices (e.g. by manufacturer, operating system, or component parts), models of mobile devices, or individual mobile devices (unique to each user).

In a typical scenario in which the payment zone threshold has been calibrated, the adapter module **100** advertises its presence along with the threshold at which it considers any mobile device **150** to be in the authorization zone **104**. This is a one-way communication from adapter module **100** to mobile device **150**. Once the mobile device **150** enters the authorization zone **104**, there is a handshake that is established between the adapter module **100** and the mobile device **150**. During this handshake, the mobile device **150** can share its model information with the adapter module **100**, and the adapter module **100** can return the payment zone **102** threshold for that specific model.

Optionally, in addition to calibrating the payment zone threshold, the adapter module **100** can apply the self-calibrating model to the authorization zone **104** to calibrate the authorization zone threshold. As with the payment zone thresholds, the authorization zone thresholds can be unique to specific types of mobile devices, models of mobile devices, or individual mobile devices. In this scenario, the adapter module **100** would broadcast multiple thresholds by device type and the mobile device **150** would determine which threshold to apply (or alternatively broadcast a baseline and the mobile device **150** uses an offset based on its device model). Even in this scenario, the authorization zone **104** is a one-way communication.

Optionally, along with the threshold that is calculated (in the payment and/or the authorization zone(s)), a safety margin can be added to minimize scenarios in which a user is within range, but the mobile-device-to-machine payment systems do not recognize it because the threshold may not have been reached. For example, if the calculated RSSI for an iPhone 5 on machine **4567** is −68 db, the mobile-device-to-machine payment systems may add a safety margin of −5 db, and establish the threshold at −73 db. So when a user's phone is communicating with the adapter module **100** at an RSSI of −73 db or better, the mobile-device-to-machine payment systems will allow the mobile device **150** to credit the payment accepting unit **120**. The safety margin can be set on the server **130** and downloaded to the adapter module **100**, or set on the mobile device **150**, or set on the adapter module **100** itself.

Optionally, in the payment zone threshold, the mobile device **150** can use other data to determine when to cancel the exclusive control of the payment accepting unit **120**, to identify when the user is moving out of the payment zone **102**. External data could include accelerometer data from the mobile device **150**. Using that data, the mobile device **150** can determine whether the user is standing relatively still in front of the payment accepting unit **120**, or if the user is in motion—effectively walking away from the payment accepting unit **120**.

Signal Unavailability Adaptation

The mobile-device-to-machine payment systems described herein use a mobile device's **150** short-range communication technology (shown as Bluetooth mechanisms **876** in FIG. **57**) and a mobile device's **150** long-range communications technology (shown as Cellular and/or WiFi mechanisms **872** in FIG. **57**). The short-range communication technology **876** communicates with the adapter module's **100**

short-range communication technology (shown as Bluetooth mechanisms **776** in FIG. **56**). The long-range communications technology **872** communicates with the server's **130** communication technology (not shown). The mobile device **150** (with a mobile application **140** thereon) acts as a communication bridge between the adapter module **100** (associated with a payment accepting unit **120**) and the server **130**. This process is described herein and works properly if there is cellular or WiFi coverage within the payment zone **102**.

One option if there is no cellular or WiFi coverage within the payment zone **102** is to determine whether there is cellular or WiFi coverage within the authorization zone **104** or the Bluetooth range **106**. If there is, then the sizes of the zones **102**, **104**, **106** could be adapted and the timing could be adapted. For example, if the mobile devices **150** detected problems with the cellular or WiFi coverage within the payment zone **102**, the user could carry his mobile device **150** into the other zones (or the mobile device **150** could use short-range communication technology to communicate with other mobile devices **150** within the authorization zone **104** or the Bluetooth range **106**) to determine whether the zones have cellular or WiFi coverage. If they do have coverage, communication between the mobile device **150** and the server **130** can be advanced (conducted earlier when the mobile device **150** is further from the machine **120**) or delayed (conducted later when the mobile device **150** is further from the machine **120**). This can be thought of as changing the size or shapes of the zones **102**, **104**, **106**. The timing would also have to be adjusted so that the authorization of funds (AuthGrant) does not expire before the user has a chance to make a purchase. It also means that balance updates to the server **130** may happen after the user has moved away from the machine **120** and has cellular or WiFi coverage again.

Another option if there is no cellular or WiFi coverage within any of the zones **102**, **104**, **106** is for the user to obtain authorization while outside of the zones in a place with cellular or WiFi coverage. This may occur, for example, if a user knows that he will be going to a place with a payment accepting unit **120** equipped with an adapter module **100** (perhaps to a favorite payment accepting unit **120**) that does not have (or rarely has) cellular or WiFi coverage. A user may also use the mobile application **140** to query payment accepting units **120** in a given range (e.g. within 50 miles) or at a given location (e.g. at a campground or in a particular remote city) to determine whether there is cellular or WiFi coverage within the zones **102**, **104**, **106**. The user can then obtain pre-authorization from the server **130** using the mobile application **140**. Again, the timing would also have to be adjusted so that the authorization of funds (AuthGrant) does not expire before the user has a chance to make a purchase. It also means that balance updates to the server **130** may happen after the user has moved away from the machine **120** and has cellular or WiFi coverage again. A mobile-device-to-machine payment system having the ability to implement this option would be able to accept cashless payments without requiring any network connection near the payment accepting unit **120**. Mobile-device-to-machine payment systems described herein that are located in a remote location where no signal is available, therefore, can accept cashless payments.

As an example of a situation in which there might be no cellular or WiFi coverage within any of the zones **102**, **104**, **106** of a particular payment accepting unit **120**, the user (a teenager) may be traveling to a remote location to attend summer camp where there is no cellular or WiFi coverage. The camp may have several payment accepting units **120** (e.g. a machine that creates a dedicated "hot spot" that requires payment for use, vending machines, or machines for renting equipment (e.g. bikes, kayaks, or basket balls)). The camp facility might notify parents that the mobile-device-to-machine payment system is available. The parents, while at home, could obtain authorization for a particular amount (that could be doled out a certain amount per day or limited to type of machine or location) to be authorized and "loaded" into the user's mobile device **150** and specify that the authorization will not expire for a certain period or until a certain date. Thereafter, while at camp, the user could use the mobile application **140** on his mobile device **150** in a manner similar to those discussed elsewhere herein. Short-range communications may be used for communications between the adapter modules **100** (associated with the machines **120**) and users' mobile devices **150**.

One subtle but powerful component of the systems described herein is that they require internet network connection only in the authorization zone **104** and only for the time period required to send the AuthRequest and receive the AuthGrant.

Once a valid AuthGrant is received by the mobile device **150**, an internet network connection is not required by either the mobile device **150** or the adapter module **100** in the payment zone **102** as long as the AuthGrant is valid (unexpired). This mechanism allows the system to seamlessly handle authenticated transactions in (temporary) offline mode, with the deferred acknowledgement and transaction messages performing the bookkeeping and cleanup when network connection is regained. The alternatives described above provide a unique way to artificially extend the authorization zone to include any location where the mobile device **150** can communicate with the server **130**.

Multiple User Resolution

As shown in FIG. **2**, in likely practical scenarios, there will be multiple users in the zones **102**, **104**, **106**. As shown, users **1**, **2**, and **3** are in the payment zone **102** near the machine **120**, users **5** and **6** are shown as positioned between the authorization zone **104** and the Bluetooth range **106**, users **4** and **7** are in the Bluetooth range **106**, user **10** is positioned on the edge of the Bluetooth range **106**, and users **8** and **9** are positioned outside of Bluetooth range **106**. The mobile-device-to-machine payment systems provide for managing, and resolving issues pertaining to multiple users.

Users **8** and **9** are positioned outside the Bluetooth range **106** so the their mobile devices **150** are not aware of the adapter module **100**.

Users **4** and **7** are within the Bluetooth range **106** and user **10** is either entering or leaving the Bluetooth range **106**. Within the Bluetooth range **106** the users' mobile devices **150** are able to see the adapter module's **100** advertisement. In this zone, the mobile device **150** preferably does not initiate a connection. The adapter module **100** is preferably unaware of the users in the Bluetooth range **106**. All the adapter module **100** is doing is advertising its presence to any multitude of users that may be in Bluetooth range **106**.

The adapter module **100** begins to log users as the users (and their respective mobile devices **150**) enter the authorization zone **104** (shown in FIG. **2** as users **5** and **6**). At this point, there is a non-exclusive connection initiated by the mobile device **150** to the adapter module **100**. It does a handshake (e.g. to exchange information needed to obtain authorization and, optionally, to log information needed for a self-calibrating authorization zone threshold) and the mobile device **150** contacts the server **130** for an authorization (e.g. sending an AuthRequest and receiving an AuthGrant). The adapter module **100** registers all mobile devices **150** that have requested and received AuthGrants. The adapter module **100** continues communicating with any other mobile device **150**

that enters the authorization zone **104**. After initial contact, the adapter module **100** may provide the mobile device **150** with a deferral delay of when to check back in with the adapter module **100** allowing opportunity for other mobile devices **150** to communicate with the adapter module **100**.

If there is only one user in the payment zone **102**, a purchase transaction may be performed. If there are multiple users in the payment zone **102**, the mobile-device-to-machine payment system must handle the situation.

One optional exemplary solution for handling the situation of the multiple users in the payment zone **102** is queuing users in the payment zone **102**. Once any mobile device **150** enters the payment zone **102**, it establishes exclusivity to a particular mobile device **150** (first come first serve). Technically, however, the adapter module **100** is not establishing an exclusive connection to the mobile device **150**. The adapter module **100** can still perform a round-robin poll and communicate with and advertise to other mobile devices **150**. Instead, the adapter module **100** establishes a queue prioritized by RSSI and time (e.g. who was first and whether the authorization has expired) and it notifies (e.g. alerts) other mobile devices **150** to wait. The earliest valid (unexpired) authorization takes precedence when there is any tie in the RSSI. Otherwise, for example, the strongest average RSSI takes priority. Preferably the queue is not a static measure of the RSSI but an averaged measure over the period of time in the queue. This compensates for a scenario in which a user may be walking around in the queue and then shows up at the payment accepting unit **120** just as the previous user is finishing. If another user was also in the payment zone **102** and stood there the entire time, but may have newer authorization, he could win out.

Anytime that the adapter module **100** cannot determine exactly which user is in the payment zone **102** in front of the payment accepting unit **120**, the adapter module **100** will disable hands-free payment. The mobile device **150** will send an alert to the user and he can use swipe to pay (manual mode). All users in payment zone **102** will show "Connected" and the first to swipe payment to the payment accepting unit **120** then locks out other users.

Multiple Module Resolution

In the scenario where there are multiple modules present, determining which payment accepting unit **120** a user is in front of can be a challenge. The mobile-device-to-machine payment systems described herein allow for adapter modules **100** to communicate to other adapter modules **100** in range via Bluetooth. Each user receives authorization grants for specific payment accepting units **120**. This means if there are multiple adapter modules **100** within the same authorization zone **104**, there will be multiple authorization grants for the user. When the user enters the payment zone **102**, it can be difficult to differentiate which payment accepting unit **120** the user is in front of if the payment zones **102** overlap.

To solve this problem, when the user enters the payment zone **102**, the adapter modules **100** communicate with each other to determine the RSSI for the particular user (based on the signal from his mobile device **150**) to triangulate which adapter module **100** (and the associated payment accepting unit **120**) is closer to the user. Optionally, the inter-module communications can restrict the user to establishing an exclusive connection with only one payment accepting unit **120**.

Optionally, when the user connects to a payment accepting unit **120**, the mobile device **150** can send a communication to the payment accepting unit **120** for momentary display to the user on the display **122**, **124** of the payment accepting unit **120**. For example, the mobile device **150** can send a communication (e.g. "connected" or "Fred's Mobile Device Connected") to the payment accepting unit's display **122**, **124** for a predetermined period of time (e.g. 1-3 seconds) so when the user is in payment zone **102**, it is clear which payment accepting unit **120** the user is connected to prior to making a purchase (either in hands-free or manual mode).

In addition, when the user is in manual mode, the mobile device **150** can display (e.g. on the touch screen **152** as shown in FIGS. **10**A-**10**D) a visual indication of the payment accepting unit **120** (e.g. a picture and/or a payment accepting unit ID of the payment accepting unit **120**) for visual confirmation. If the user is in manual mode, the user can manually change the payment accepting unit **120**.

Descriptive Scenario

FIG. **7**, FIGS. **8**A-**8**G, and **9**A-E (as well as other figures) can be used to understand a detailed exemplary scenario of the mobile-device-to-machine payment systems described herein. An exemplary flow of communications and steps are loosely described below with reference to these (and other figures). It should be noted that alternative scenarios could include, for example, a modified order of the steps performed.

Prior to vending transactions, a user downloads a mobile app **140** onto his mobile device **150**, creates an account, and configures a funding source via, for example, a funding source server **160**. A funding source may be, for example, a debit card, a credit card, campus cards, rewards points, bank accounts, payment services (e.g. PayPal®) or other payment option or combination of payment options known or yet to be discovered. The funding sources may be traditional and/or nontraditional payment sources that are integrated into the ecosystem described herein and then used indirectly as a source of funds. Funds from the funding source are preferably held on the server **130** such that when an AuthRequest is received by the server **130**, the server **130** can send an AuthGrant authorizing funds for a purchase.

The user can specify one or more "favorite" adapter module(s) **100** (that has a one-to-one relationship to the payment accepting unit **120**) that he may visit regularly, such as a vending machine at school or work. Favorite adapter modules **100** appear on a pre-filtered list and allow for additional rich features such as hands-free payment.

The payment accepting unit **120** may be equipped with an adapter module **100** that is constantly advertising its availability via Bluetooth (or other "signals," "communications," and/or "transmissions"). This ongoing advertising and scanning for adapter modules is shown in FIG. **8**A. As shown, the mobile device **150** is continuously scanning for any adapter module **100** within Bluetooth (or other "signal," "communication," and/or "transmission") range. When the user is within range of that adapter module **100**, the mobile device **150** tracks and monitors the signal strength until a predetermined "authorization zone" threshold is achieved.

FIGS. **8**B and **9**A generally show that when the authorization zone threshold is reached, the mobile device **150** enters the authorization zone (block **302**) and registers the adapter module **100**. The mobile device **150** connects to the server **130** (block **304**). The app **140** on the mobile device **150** creates a request for authorization (AuthRequest) and passes the AuthRequest to the server **130** using appropriate communication technology (e.g. cellular or WiFi) (block **306**). The server **130** responds with an authorization grant (AuthGrant) encrypted with the specific adapter module's private key (block **306**). This authorization token may minimally include the UserID, ApparatusID (for the adapter module **100**), authorization amount, and expiration time. The mobile device **150** receives the AuthGrant from the server **130**, and retains it until the mobile device **150** is ready to issue payment to an adapter module **100**. The mobile device **150** collects all pend-

ing AuthGrants that may be one or more depending on how many adapter modules **100** are in-range. Unused AuthGrants that expire are purged from the mobile device **150** and the server **130**. It is important to note that the mobile device **150** is unable to read the AuthGrant because it is encrypted with the adapter module's unique private key that is only known to server **130** and adapter module **100**. This provides a preferred key element of security in the system as the adapter module **100** only trusts AuthGrants that are issued by the server, and the AuthGrants cannot be read or modified by the mobile device **150** or any other party in between the server and the adapter module **100**. Additional mobile devices **150** may enter the authorization zone **104** (block **308**).

As the user approaches a specific adapter module **100**, the user enters the payment zone **102** and an event threshold is triggered based on heuristics performed by the mobile device **150**. Blocks **310** and **312** show the loop steps of waiting for a mobile device **150** from the authorization zone **104** to enter the payment zone **102**. If the user leaves the authorization zone **104** without entering the payment zone **102**, the adapter module **100** returns to advertising its presence (block **300**).

FIGS. **8**C and **9**B generally show the user entering the payment zone. The mobile device **150** verifies that it has an unexpired and valid AuthGrant. If the AuthGrant is not good, it may be requested again, repeating the AuthRequest process (block **315**). If the AuthGrant is good, the mobile device **150** sends the valid AuthGrant (including the wallet balance (block **322**)) to the adapter module **100** to initiate a transaction. The mobile device **150** may issue the AuthGrant automatically without specific user interaction if the hands-free mode is supported (and the device is a favorite (block **318**), there is only one device in the payment zone **102** (block **318**), and (optionally) there is only one user in the authorization zone **104** (block **320**). If any of these factors are not present, the mobile device **150** will prompt and/or wait for the user to begin the transaction manually (block **324**).

FIGS. **8**D, **9**C, and **9**D generally show the transaction process. As shown in FIG. **9**C, the adapter module **100** runs through a series of questions to determine if there are any issues that would prevent vending including: has the user canceled in-app? (block **326**), has the user walked away? (block **328**), is the coin return pressed? (block **330**), has more than a predetermined period of time elapsed? (block **332**). If the answer to any of these questions is "yes," the transaction does not proceed. If the answers to all of these questions is "no," the user makes a selection (block **334**) on the payment accepting unit **120** in the same or similar manner as compared to if cash or credit were presented to the payment accepting unit **120**. If the machine **120** is able to vend (block **336**), it attempts to release the product. If the vend fails (block **338**) it is reported by the machine (block **340**) and a credit is returned to the virtual wallet (block **342**). If the vend is successful (block **338**) it is reported by the machine (block **344**). Put another way, after the transaction is complete, the adapter module **100** returns to the mobile device **150** the details of the transaction as well as an encrypted packet containing the vend details to be sent to the server **130** via the mobile device **150**. Optionally, the adapter module **100** can pass additional information not directly related to the transaction such as payment accepting unit health, sales data, error codes, etc.

FIGS. **8**D and **9**E generally show the multi-vend function. If the machine has enabled multi-vend capabilities (block **350**) and the multi-vend limit has not been reached, the process returns to the question of whether the user is in the payment zone (block **310** of FIG. **9**A). If the machine does not have enabled multi-vend capabilities (block **350**) or the multi-vend limit has been reached, the wallet is decremented by the vend amount(s) and "change" is returned to the virtual wallet (block **354**) and the process ends (block **356**).

FIG. **8**E is a timing schematic showing an exemplary Login process. FIG. **8**F is a timing schematic showing an exemplary bootup process. FIG. **8**G is a timing schematic showing an exemplary Account Check/Update process.

Several of the figures are flow charts (e.g. FIGS. **9**A-**9**E) illustrating methods and systems. It will be understood that each block of these flow charts, components of all or some of the blocks of these flow charts, and/or combinations of blocks in these flow charts, may be implemented by software (e.g. coding, software, computer program instructions, software programs, subprograms, or other series of computer-executable or processor-executable instructions), by hardware (e.g. processors, memory), by firmware, and/or a combination of these forms. As an example, in the case of software, computer program instructions (computer-readable program code) may be loaded onto a computer to produce a machine, such that the instructions that execute on the computer create structures for implementing the functions specified in the flow chart block or blocks. These computer program instructions may also be stored in a memory that can direct a computer to function in a particular manner, such that the instructions stored in the memory produce an article of manufacture including instruction structures that implement the function specified in the flow chart block or blocks. The computer program instructions may also be loaded onto a computer to cause a series of operational steps to be performed on or by the computer to produce a computer implemented process such that the instructions that execute on the computer provide steps for implementing the functions specified in the flow chart block or blocks. Accordingly, blocks of the flow charts support combinations of steps, structures, and/or modules for performing the specified functions. It will also be understood that each block of the flow charts, and combinations of blocks in the flow charts, may be divided and/or joined with other blocks of the flow charts without affecting the scope of the invention. This may result, for example, in computer-readable program code being stored in whole on a single memory, or various components of computer-readable program code being stored on more than one memory.

Distinction From Known Systems

Many of the known systems and methods require that the payment accepting unit be persistently (continuously) connected to and/or connectable on demand to some sort of remote server in order to function. As an example, the Carlson reference describes a system and a method for using a portable consumer device. Described embodiments include a consumer using the portable consumer device to dial a number to purchase an item (product or service) in a vending machine, to send an SMS to purchase an item in a vending machine, or to use a mobile wallet to purchase an item in a vending machine. It is mentioned in one embodiment that the consumer may launch an application in the portable consumer device or, alternatively, the portable consumer device may automatically detect the vending machine and prompt the consumer to enter information associated with the vending machine. It should be noted, however, that even when there is automatic detection, the user is prompted to enter information (e.g. a machine alias, payment information, or a PIN) and it can be inferred that this is entered on the portable consumer device. Once connected to a payment processing network, the authorization process begins using a payment processing network and/or payment server. Significantly, all of the embodiments described in the Carlson reference specify that the payment server sends an authorization response message to the vending machine. This means that,

unlike the mobile-device-to-machine payment systems described herein, a persistent network connection is required for the Carlson system to function. Other references that disclose systems that require a persistent network connection include the Khan reference (the MicroAdapter having the persistent connection), the Garibaldi reference, and the Weiner reference.

Many of the known systems and methods require the user to significantly interact with their mobile devices. As an example, the Whigham reference is directed to a system that eliminates the need for currency for a vending machine and also eliminates the need for a dedicated online connection between the vending machine and the issuer of a credit card or a debit card. Instead the Whigham system and method allows a consumer to purchase a product from an automatic vending machine by using the consumer's cellular telephone, personal digital assistant (PDA), or similar wireless communication device as a link between the provider of the products in the vending machine and the vending machine. The Whigham reference, however, sets forth a system and method requires significant interaction between the consumer and his telephone including dialing a telephone number to a server (that, in turn, provides a vend code to the consumer), requesting a specific product (e.g. by dialing additional digits, although this step is optional if a unique number was dialed for a specific product), and transmitting a vend code to the vending machine. (Other references that disclose systems that require user interaction with the phone include the Offer reference, the Khan reference, the Belfer reference, and the Carlson reference.) In addition to other differences, some of the mobile-device-to-machine payment systems described herein do not require the user to interact with his mobile device at all, which can be contrasted to known systems and methods that require the consumer to, for example, dial a telephone number, enter a machine identification, and/or enter a product identifier using the mobile device to purchase a product.

The known systems and methods that use a cellular telephone to facilitate cashless transactions at a vending machine use the cellular telephone to authorize a particular transaction. For example, once the user knows what he wants from a vending machine, he can dial a server and receive authorization to make a specific purchase. Sometimes this includes dialing additional numbers on the cellular telephone to specify a particular product. The mobile-device-to-machine payment systems described herein take a completely different approach. The mobile-device-to-machine payment systems described herein are not specifically interested in the details of the transaction to authorize the transaction. Instead, the mobile-device-to-machine payment systems function more like a gift card, a credit card, or a debit card in that they allow the user to have funds to make a purchase. When a user is in range, the adapter module **100** (via a mobile device **150**) sends an AuthRequest to the server **130** to preemptively obtain authorization to make funds available. The server **130** returns the AuthGrant for funds to the adapter module **100** (via a mobile device **150**) so that the user may use the funds to make a purchase. The AuthGrant may remain valid until it expires. This gives the user significantly more flexibility than known systems and methods.

Miscellaneous

It is to be understood that the inventions, examples, and embodiments described herein are not limited to particularly exemplified materials, methods, and/or structures. It is to be understood that the inventions, examples, and embodiments described herein are to be considered preferred inventions, examples, and embodiments whether specifically identified as such or not.

All references (including, but not limited to, foreign and/or domestic publications, patents, and patent applications) cited herein, whether supra or infra, are hereby incorporated by reference in their entirety.

The terms and expressions that have been employed in the foregoing specification are used as terms of description and not of limitation, and are not intended to exclude equivalents of the features shown and described. While the above is a complete description of selected embodiments of the present invention, it is possible to practice the invention using various alternatives, modifications, adaptations, variations, and/or combinations and their equivalents. It will be appreciated by those of ordinary skill in the art that any arrangement that is calculated to achieve the same purpose may be substituted for the specific embodiment shown. It is also to be understood that the following claims are intended to cover all of the generic and specific features of the invention herein described and all statements of the scope of the invention that, as a matter of language, might be said to fall therebetween.

What is claimed is:

1. A mobile-device-to-machine payment system for facilitating a cashless transaction for purchase of at least one product or service by a user from a payment accepting unit having input mechanisms, the user having a mobile device having both short-range communication technology and long-range communication technology, the payment accepting unit capable of dispensing at least one product or service, said system comprising:

(a) an adapter module associated with the payment accepting unit, said adapter having short-range communication technology for communicating with the short-range communication technology of the mobile device;

(b) a server having long-range communication technology for communicating with the long-range communication technology of the mobile device;

(c) said adapter module for sending an authorization request for funds to the mobile device using short-range communication technology, the mobile device forwarding said authorization request for funds to said server using long-range communication technology; and

(d) said server for sending an authorization grant for funds to the mobile device using long-range communication technology, the mobile device forwarding said authorization grant for funds to said adapter module using short-range communication technology;

(e) wherein the payment accepting unit dispenses the at least one product or service in response to receiving user input to the payment accepting unit input mechanism if said adapter module has received said authorization grant.

2. The system of claim **1**, said adapter module having security technology and said server having security technology, said authorization request being secured by said adapter module security technology to create a secured authorization request, said authorization grant being secured by said server security technology to create a secured authorization grant, and said secured authorization request and said secured authorization grant being undecipherable to the mobile device.

3. The system of claim **1**, said adapter module and said server sharing a unique private key, said adapter module having encryption/decryption technology and said server having encryption/decryption technology, said authorization request being encrypted by said adapter module encryption/

decryption technology using said unique private key to create an encrypted authorization request, said encrypted authorization request being decrypted by said server encryption/decryption technology using said unique private key, said authorization grant being encrypted by said server encryption/decryption technology using said unique private key to create an encrypted authorization grant, said encrypted authorization grant being decrypted by said adapter module encryption/decryption technology using said unique private key, and said encrypted authorization request and said encrypted authorization grant being undecipherable to the mobile device.

4. The system of claim **1** further comprising:

(a) said adapter module surrounded by two zones, a payment zone and an authorization zone, wherein said payment zone is within said authorization zone;

(b) said adapter module sending said authorization request when the mobile device is within said authorization zone; and

(c) the mobile device forwarding said authorization grant for funds to said adapter module when the mobile device is within said payment zone.

5. The system of claim **1** further comprising:

(a) said adapter module surrounded by three zones, a payment zone, an authorization zone, and a communication zone, wherein said payment zone is within said authorization zone and said authorization zone is within said communication zone;

(b) the mobile device receiving advertising broadcast signals from said adapter module within said communication zone;

(c) said adapter module sending said authorization request when the mobile device is within said authorization zone; and

(d) the mobile device forwarding said authorization grant for funds to said adapter module when the mobile device is within said payment zone.

6. The system of claim **1** having a hands-free mode in which the payment accepting unit dispenses the at least one product or service without the user interacting with the mobile device.

7. The system of claim **1** having a hands-free mode in which the payment accepting unit dispenses the at least one product or service without the user interacting with the mobile device, said system further comprising:

(a) a display of the payment accepting unit for displaying funds available based on information from said authorization grant; and

(b) input mechanisms of the payment accepting unit for receiving user selection input when the user interacts with the input mechanisms to select the at least one product or service to be dispensed.

8. The system of claim **1** wherein said adapter module is an in-line dongle for in-line insertion within a multi-drop bus of the payment accepting unit.

9. The system of claim **1**:

(a) the payment accepting unit having a multi-drop bus to a payment receiving mechanism, the multi-drop bus having a male adapter and a female adapter;

(b) said adapter module having a male adapter and a female adapter; and

(c) said adapter module insertable in serial with the multi-drop bus by connecting said male adapter of said adapter module to the female adapter of the multi-drop bus and by connecting said female adapter of said adapter module to the male adapter of the multi-drop bus.

10. A mobile-device-to-machine payment system for facilitating a cashless transaction for purchase of at least one product or service by a user from a payment accepting unit having input mechanisms, the user having a mobile device having both short-range communication technology and long-range communication technology, the payment accepting unit capable of dispensing at least one product or service, said system comprising:

(a) an adapter module associated with the payment accepting unit, said adapter having short-range communication technology for communicating with the short-range communication technology of the mobile device, said adapter module having security technology, and said adapter module surrounded by two zones, a payment zone and an authorization zone, wherein said payment zone is within said authorization zone;

(b) a server having long-range communication technology for communicating with the long-range communication technology of the mobile device, said server having security technology;

(c) said adapter module for sending a secured authorization request for funds secured by said adapter module security technology to the mobile device using short-range communication technology when the mobile device is within said authorization zone, the mobile device forwarding said secured authorization request for funds to said server using long-range communication technology; and

(d) said server for sending a secured authorization grant for funds secured by said server security technology to the mobile device using long-range communication technology, the mobile device forwarding said secured authorization grant for funds to said adapter module using short-range communication technology when the mobile device is within said payment zone;

(e) wherein the payment accepting unit dispenses the at least one product or service in response to receiving user input to the payment accepting unit input mechanism if said adapter module has received said secured authorization grant.

11. The system of claim **10**, said secured authorization grant being undecipherable to the mobile device.

12. The system of claim **10**, said adapter module and said server sharing a unique private key, said adapter module security technology being encryption/decryption technology and said server security technology being encryption/decryption technology, said secured authorization request being encrypted by said adapter module encryption/decryption technology using said unique private key to create an encrypted secured authorization request, said encrypted secured authorization request being decrypted by said server encryption/decryption technology using said unique private key, said secured authorization grant being encrypted by said server encryption/decryption technology using said unique private key to create an encrypted secured authorization grant, said encrypted secured authorization grant being decrypted by said adapter module encryption/decryption technology using said unique private key, and said encrypted secured authorization request and said encrypted secured authorization grant being undecipherable to the mobile device.

13. The system of claim **10** further comprising:

(a) said adapter module being surrounded by three zones, said payment zone, said authorization zone, and a communication zone, wherein said authorization zone is within said communication zone; and

(b) the mobile device receiving advertising broadcast signals from said adapter module within said communication zone.

14. The system of claim **10** having a hands-free mode in which the payment accepting unit dispenses the at least one product or service without the user interacting with the mobile device.

15. The system of claim **10** having a hands-free mode in which the payment accepting unit dispenses the at least one product or service without the user interacting with the mobile device, said system further comprising:

(a) a display of the payment accepting unit for displaying funds available based on information from said secured authorization grant; and

(b) input mechanisms of the payment accepting unit for receiving user selection input when the user interacts with the input mechanisms to select the at least one product or service to be dispensed.

16. The system of claim **10** wherein said adapter module is an in-line dongle for in-line insertion within a multi-drop bus of the payment accepting unit.

17. The system of claim **10**:

(a) the payment accepting unit having a multi-drop bus to a payment receiving mechanism, the multi-drop bus having a male adapter and a female adapter;

(b) said adapter module having a male adapter and a female adapter;

(c) said adapter module insertable in serial with the multi-drop bus by connecting said male adapter of said adapter module to the female adapter of the multi-drop bus and by connecting said female adapter of said adapter module to the male adapter of the multi-drop bus.

18. A method for using a mobile-device-to-machine payment system for facilitating a cashless transaction for purchase of at least one product or service by a user from a payment accepting unit having input mechanisms, the user having a mobile device having both short-range communication technology and long-range communication technology, the payment accepting unit capable of dispensing at least one product or service, said method comprising the steps of:

(a) sending an authorization request for funds to the mobile device using short-range communication technology of an adapter module associated with the payment accepting unit;

(b) receiving said authorization request for funds from said short-range communication technology of said adapter module at the short-range communication technology of the mobile device;

(c) forwarding said authorization request for funds to a server using the long-range communication technology of the mobile device;

(d) receiving said authorization request for funds from the long-range communication technology of the mobile device at long-range communication technology of said server;

(e) sending an authorization grant for funds to the mobile device using said long-range communication technology of said server;

(f) receiving said authorization grant for funds from long-range communication technology of said server at the long-range communication technology of the mobile device;

(g) forwarding said authorization grant for funds to said adapter module using the short-range communication technology of the mobile device;

(h) receiving said authorization grant for funds from the short-range communication technology of the mobile device at short-range communication technology of said adapter module; and

(i) dispensing the at least one product or service from the payment accepting unit in response to receiving user input to the payment accepting unit input mechanism if said adapter module has received said authorization grant.

19. The method of claim **18**, securing said authorization request using security technology associated with said adapter module to create a secured authorization request, securing said authorization grant using security technology associated with said server to create a secured authorization grant, and said secured authorization request and said secured authorization grant being undecipherable to the mobile device.

20. The method of claim **18**, sharing a unique private key between said adapter module and said server, encrypting using said unique private key said authorization request using encryption/decryption technology associated with said adapter module to create an encrypted authorization request, decrypting using said unique private key said encrypted authorization request using encryption/decryption technology associated with said server, encrypting using said unique private key said authorization grant using said encryption/decryption technology associated with said server to create an encrypted authorization grant, decrypting using said unique private key said encrypted authorization grant using encryption/decryption technology associated with said adapter module, and said encrypted authorization request and said encrypted authorization grant being undecipherable to the mobile device.

21. The method of claim **18** further comprising:

(a) surrounding said adapter module with two zones, a payment zone and an authorization zone, wherein said payment zone is within said authorization zone;

(b) said adapter module sending said authorization request when the mobile device is within said authorization zone; and

(c) the mobile device forwarding said authorization grant for funds to said adapter module when the mobile device is within said payment zone.

22. The method of claim **18** further comprising:

(a) surrounding said adapter module with three zones, a payment zone, an authorization zone, and a communication zone, wherein said payment zone is within said authorization zone and said authorization zone is within said communication zone;

(b) the mobile device receiving advertising broadcast signals from said adapter module within said communication zone;

(c) said adapter module sending said authorization request when the mobile device is within said authorization zone; and

(d) the mobile device forwarding said authorization grant for funds to said adapter module when the mobile device is within said payment zone.

23. The method of claim **18** having a hands-free mode in which the payment accepting unit dispenses the at least one product or service without the user interacting with the mobile device.

24. The method of claim **18** having a hands-free mode in which the payment accepting unit dispenses the at least one product or service without the user interacting with the mobile device, said method further comprising the steps of:

(a) displaying funds available on a display of the payment accepting unit, said funds available being based on information from said authorization grant; and

(b) receiving user selection input when the user interacts with input mechanisms of the payment accepting unit to select the at least one product or service to be dispensed.

25. The method of claim **18** further comprising the step of inserting said adapter module as an in-line dongle for in-line insertion within a multi-drop bus of the payment accepting unit.

26. The method of claim **18**, the payment accepting unit having a multi-drop bus to a payment receiving mechanism, the multi-drop bus having a male adapter and a female adapter, and said adapter module having a male adapter and a female adapter, said method further comprising the step of inserting said adapter module in serial with the multi-drop bus by connecting said male adapter of said adapter module to the female adapter of the multi-drop bus and by connecting said female adapter of said adapter module to the male adapter of the multi-drop bus.

* * * * *