NATIONAL
AUTOMATIC
MERCHANDISING
ASSOCIATION

Serving the Vending / Foodservice management industry

Multi-Drop Bus / Internal Communication Protocol

MDB / ICP

Supported by the Technical Members of:

NAMA	**N**ational **A**utomatic **M**erchandising **A**ssociation
EVA	**E**uropean **V**ending **A**ssociation
EVMMA	**E**uropean **V**ending **M**achine **M**anufacturers **A**ssociation

Version 3.0

March 26, 2003

National Automatic Merchandising Association
20 N. Wacker Drive, Suite 3500
Chicago, Illinois 60606-3120 USA
312-346-0370 FAX 312-704-4140
E-Mail: Tech@vending.org

(this page intentionally left blank)

Multi-Drop Bus / Internal Communication Protocol

Table of Contents

Revisions

Introduction

Section 1
General Information

1. Introduction
2. Operational and Application Notes
3. Levels and Options

Section 2
Communication Format

1. Byte Format
2. Block Format
3. Peripheral Addresses
4. Software Operational Rules
5. Typical Session Examples
6. File Transport Layer

Section 3
Bus Timing

1. Timing Definitions
2. Timing Specifications
3. Timing Diagram

Section 4
Hardware Specification

1. Bus Power Supply Definition
2. Bus Transmitter/Receiver Specification
3. Connector Specification
4. Example Schematic

Section 5
Coin Acceptor/Changer
VMC/Peripheral Communication Specifications

1. Introductions
2. VMC Commands
3. VMC Command Format
4. Changer Non-Response Time
5. Changer Power Requirements

CSC ServiceWorks – Ex. 1008
Page 3 of 270

Section 6
Bill Validator
VMC/Peripheral Communication Specifications

1. Introductions
2. VMC Commands
3. VMC Command Format
4. Bill Validator Non-Response Tome
5. Bill Validator Power Requirements

Section 7
Cashless Device(s)
VMC/Peripheral Communication Specifications

1. Introduction
2. State Definitions
3. Command Protocol
4. Cashless Device Command Response Formats
5. Cashless Device Non-Response Time
6. Cashless Device Power Requirements

Section 8
Communications Gateway
VMC/Peripheral Communication Specifications

1. Introduction
2. VMC Commands
3. Communications Gateway Command Format
4. Communications Gateway Non-Response Time
5. Communications Gateway Power Requirements
6. Communications Gateway Examples

Section 9
Universal Satellite Device
VMC/Peripheral Communication Specifications

1. Introduction
2. USD Summary
3. Command Protocol
4. USD Power Requirements
5. Examples - Mode 1 / 2 / 3 Sessions
6. Examples - Data Block Transfers

Section 10
Coin Hopper or Tube – Dispenser
VMC/Peripheral Communication Specifications

1. Introduction
2. VMC Commands
3. VMC Command Format
4. Dispenser Non-Response Time
5. Dispenser Power Requirements

CSC ServiceWorks – Ex. 1008
Page 4 of 270

Appendix 1
Currency Codes

Appendix 2
Battery Operated Card Reader

CSC ServiceWorks – Ex. 1008
Page 5 of 270

Revisions

Version 3.0

Version 3.0 of this specification is the third release of the international **Multi-Drop Bus / Internal Communication Protocol** (**MDB / ICP**). This specification is the continued effort put forth by technical members of NAMA and the EVA. The basis for this specification is the Version 2.0 international **Multi-Drop Bus / Internal Communication Protocol** (**MDB / ICP**) released on October 4, 2002.

Of special note are the four major changes that were made to the specification:

- Added a second Cashless Device peripheral address in Section 7
- Replaced the Audit Unit with the Communications Gateway in Section 8
- Added the Coin Hopper or Tube – Dispenser in Section 10 (new)
- Assigned 2 addresses to be used for experimental peripherals

The following lists the primary revisions to the Version 3.0 of the **MDB / ICP.**

Section 1 – General Information

Section 1.3

- Changed the Level and Options chart for the Communications Gateway and the Coin Hopper or Tube – Dispenser

Section 2 – Communication Format

Section 2.2

- Added headers for the Response Codes
- Clarified non response processing for Master-to-Peripheral and Peripheral-to-Master communication.

Section 2.3

- Updated the Peripheral Address table for the Communications Gateway, Coin Hopper, Cashless Payment 1, and Experimental addresses
- Defined the use of the experimental addresses

Section 2.5

- Added new RESET examples F & G.

CSC ServiceWorks – Ex. 1008
Page 6 of 270

Section 5 – Coin Acceptor / Changer

Section 5.2

- Renamed the STATUS command to SETUP command
- Added a new Possible Credited Coin Removal status code (0Dh)

Section 6 – Bill Validator

Section 6.2

- Renamed the STATUS command to SETUP command
- Added a new Possible Credited Bill Removal status code (0Ch)

Section 7 – Cashless Device(s) (New Cashless Device #2)

Changed name from Cashless Payment to Cashless Device

Section 7.1

- Added information regarding the dual addresses for two Cashless Device peripherals (10h and 60h)

Section 7.3

- Updated Command & Response table for dual addresses

Section 7.4

- Updated Command/Response Formats for dual addresses

Section 8 – Communications Gateway (New Peripheral)

Sections 8.1 through 8.6

- Replaced former Audit Unit sections with new Communications Gateway Sections

Section 9 –Universal Satellite Device (USDC)

Section 9.3

- Updated POLL table with proper number of bytes (FTL portion)
- Changed “numeric row and column” to “Item Number”

Section 10 – Coin Hopper or Tube – Dispenser (New Peripheral)

Sections 10.1 through 10.5

- Added complete new sections

CSC ServiceWorks – Ex. 1008
Page 7 of 270

Version 2.0

Version 2.0 of this specification is the second release of the international **Multi-Drop Bus / Internal Communication Protocol** (**MDB / ICP**). This specification is the culmination of effort put forth by technical members of NAMA, the EVMMA, and the EVA. The basis for this specification is the Version 1.0 international **Multi-Drop Bus / Internal Communication Protocol** (**MDB / ICP**) released on October 14, 1998.

The following lists the primary revisions to the Version 2.0 of the **MDB / ICP**

Introduction

Foreword

- Clarified that the Standard is a communication interface

Section 1 - General Information

Section 1.1

- Added 3rd paragraph noting interface specification vs. system specification

Section 1.3

- Added entire Levels and Options section

Section 2 - Communication Format

Section 2.1

- Changed Mode Bit Master-to-Peripheral text

Section 2.2

- Removed “command” from Master-to-Peripheral 4th paragraph
- Changed RET description

Section 2.3

- Defined address 0000xxxB (00H) for VMC
- Provided address information to show hexadecimal format

Section 2.4

- Changed format to 2.4.X sub-sections and added 2.4.4 on Levels

Section 2.5

- Changed RET description

Section 2.6

- Added complete File Transport Layer Section

Section 3 - Bus Timing

Section 3.1

- Added 2nd sentence to t_{setup}

Section 4 - Hardware Specification

Section 4.3

- Modified complete section and added AMP as alternate source to Molex

Section 4.4

- Added pin numbers to schematic

CSC ServiceWorks – Ex. 1008
Page 8 of 270

Section 5 - Coin Acceptor / Changer

Section 5.1

- Provided additional address information

Section 5.3

- Added recommended RESET command sequence
- Modified STATUS response to indicate Country / Currency Codes
- Modified County / Currency Code to include ISO 4217 (Appendix A1)
- Added Note 2 to DISPENSE (ODH) command
- Added FTL POLLed responses
- Added FTL "b3" option bit
- Added FTL expansion commands
- Cosmetic changes to all EXPANSION commands
- Split ALTERNATIVE PAYOUT (0FH-02H) and PAYOUT STATUS (0FH-03H) command into two separate commands (cosmetic change only)
- Added text to ALTERNATIVE PAYOUT (0FH-02H) Y1 description
- Added Note 3 to ALTERNATIVE PAYOUT STATUS (0FH-03H)

Section 5.5

- Added "**See Note 2 …**" text
- Added "If both peripherals supported" to Note

Section 6 - Bill Validator

Section 6.1

- Provided additional address information

Section 6.3

- Added recommended RESET command sequence
- Modified STATUS response to indicate Country / Currency Codes
- Modified County / Currency Code to include ISO 4217 (Appendix A1)
- Added Level 2 information
- Added Level 2 option bytes w/ new EXPANSION COMMANDs:

  37H 01H Level 2 Option Bit Enable
  37H 02H Level 2 Identification
- Added FTL POLLed responses
- Added FTL "b0" option bit
- Added FTL expansion commands
- Modified last sentence in SECURITY command to link to Z9-Z10 STATUS response
- Cosmetic changes to all EXPANSION commands

Section 6.5

- Added "If both peripherals supported" to Note

CSC ServiceWorks – Ex. 1008
Page 9 of 270

Section 7 - Cashless Payment

Section 7.2 & 7.2.7

- Added Level 03 Negative Vend Request

Section 7.2.2

- Changed 1st sentence to link Setup to 7.4.1 information

Section 7.2.4

- Added Negative Vend and Revalue

Section 7.2.7

- Added Level 03 Negative Vend Request

Section 7.3

- Added bold text regarding defining currency at the beginning of a session
- Broke uninterruptable table into VMC Command and Reader Response
- Added Level 03 NEGATIVE VEND REQUEST to VMC Command table
- Added Level 03 DATA ENTRY REQUEST to Reader Response table
- Highlighted command out of sequence hard resets from VMC
- Moved Vend Failure Sequence to 7.4.8

Section 7.3 – Table 1

- Changed name to COMMANDS & RESPONSES
- Changed Comment column to VMC / Reader Level Support
- Linked all commands and responses to Levels
- Added DATA ENTRY REQUEST POLLed responses
- Added FTL POLLed responses
- Added FTL commands
- Added NEGATIVE VEND REQUEST responses
- Defined 14H-1AH and 20H-FEH as “For Future Use”

Section 7.4.1

- Cosmetically modified RESET command sequence
- Added 32 bit SETUP MAX/MIN PRICE
- Changed text following **Reader response**

Section 7.4.2

- Clarified Level 01 information (reader has no revalue capability)
- Added Level 03 information
- Modified SETUP response to indicate Country / Currency Codes
- Modified County / Currency Code to include ISO 4217 (Appendix A1)
- Added bold Note in Z3-Z4 County / Currency Code
- Added definition for Miscellaneous Options “b4 – b7”

Section 7.4.3

- Added Level 03 SETUP if Expanded Currency Mode

Section 7.4.4

- Added Level 03 BEGIN SESSION response if Expanded Currency Mode
- Added Level 03 VEND APPROVED response if Expanded Currency Mode
- Added Level 03 PERIPHERAL ID response if Expanded Currency Mode
- Clarified COMMAND OUT OF SEQUENCE definition

CSC ServiceWorks – Ex. 1008
Page 10 of 270

- Added Level 03 REVALUE LIMIT AMOUNT response if Expanded Currency Mode
- Added Level 03 DATA ENTRY REQUEST response if Data Entry Mode
- Added Level 03 DATA ENTRY CANCEL response if Data Entry Mode
- Added Level 03 FTL REQ TO RCV response if FTL Mode
- Added Level 03 FTL RETRY / DENY response if FTL Mode
- Added Level 03 FTL SEND BLOCK response if FTL Mode
- Added Level 03 FTL OK TO SEND response if FTL Mode
- Added Level 03 FTL REQ TO SEND response if FTL Mode

Section 7.4.5

- Added Level 03 VEND command if Expanded Currency Mode
- Added Level 03 VEND APPROVED response if Expanded Currency Mode

Section 7.4.8

- Added Vend Failure (from 7.3)

Section 7.4.10

- Added Level 03 VEND command if Expanded Currency Mode

Section 7.4.11 (new)

- Added complete Level 03 NEGATIVE VEND Request section

Section 7.4.15 (new)

- Added complete Level 03 DATA ENTRY Request section

Section 7.4.16

- Added Level 03 REVALUE Request command if Expanded Currency Mode

Section 7.4.17

- Added Level 03 REVALUE Limit Request command if Expanded Currency Mode

Section 7.4.18

- Added Level 03 EXPANSION REQUEST ID response if Expanded Currency Mode

Section 7.4.22

- Added Level 03 EXPANSION ENABLE OPTIONS command

Section 7.4.23

- Added Level 03 FTL REQ TO RCV command & responses if FTL Mode

Section 7.4.24

- Added Level 03 FTL RETRY / DENY command if FTL Mode

Section 7.4.25

- Added Level 03 FTL SEND BLOCK command & response if FTL Mode

Section 7.4.26

- Added Level 03 FTL OK TO SEND command if FTL Mode

Section 7.4.27

- Added Level 03 FTL REQ TO SEND command & responses if FTL Mode

Section 7.7

- Added Example Vend Session #10 (Single Negative Vend)

CSC ServiceWorks – Ex. 1008
Page 11 of 270

Section 8 - Audit Device

Section 8.1

- Provided additional address information

Section 8.3

- Added FTL POLLed responses
- Added FTL “b3” option bit
- Added FTL expansion commands

Section 9 - Universal Satellite Device

Section 9.1

- Provided additional address information

Section 9.3

- Added FTL POLLed responses
- Added FTL “b2” option bit
- Added FTL expansion commands

Document Revision History

- Deleted

Appendix 1 - Currency Codes

- Added entire section (based on **ISO 4217**)

Appendix 2 - Battery Operated Card Reader

- Added entire section

Version 1.0

Version 1.0 of this specification is the first release of the international **Multi-Drop Bus / Internal Communication Protocol** (**MDB / ICP**). This specification is the culmination of effort put forth by technical members of NAMA, the EVMMA, and the EVA. The basis for this specification is the **International Multi-Drop Bus Interface Standard** published by NAMA and the **Internal Communication Protocol** published by the EVMMA. The NAMA document was originally introduced on October 19, 1993 and later revised on August 19, 1994, June 20, 1997, and October 15, 1997. The EVMMA document was adopted in 1994 and later revised in 1995.

The following lists the primary revisions to the original two documents which were “combined” to create Version 1.0 of the **MDB / ICP**. In actuality, the NAMA **MDB** was the basis of the **MDB / ICP** with the exception of Section 7 which came from the EVMMA **ICP**. Besides typographical corrections and actual feature changes (below), the entire document was edited to provide a more uniform appearance.

The following lists the primary revisions to the Version 1.0 of the **MDB / ICP.**

CSC ServiceWorks – Ex. 1008
Page 12 of 270

Hardware Specification - Section 4.3

- Added drawings of the MDB male and female connectors.

Coin Acceptor / Changer - Section 5.3

- Added Expansion commands:
  - 0F-05 Send Current Diagnostic Status
  - 0F-06 Send Controlled Manual Fill Report
  - 0F-07 Send Controlled Manual Payout Report

Coin Acceptor / Changer - Section 5.5

- Added coin acceptance and coin payout power requirements for coin changers using motorized payout mechanisms.
- Added note about simultaneously supplying bill validator transport power.

Bill Validator - Section 6.5

- Added note about simultaneously supplying coin mechanism coin acceptance power.

Cashless Payment - Section 7.2.6

- Added Level 02 Revalue capability.

Cashless Payment - Section 7.3

- Added Level 02 REVALUE REQUEST.
- Removed NAK (NCK) response from uninterruptable state and unexecutable command descriptions.
- Eliminated the BUSY response to vend failure sequences.
- Modified Table 1 per above.

Cashless Payment - Section 7.4.1

- Further defined the initializing sequence following a RESET command.

Cashless Payment - Section 7.4.2

- Further defined the Z7 Application Maximum Response Time.
- Added Z8 – b3 for supporting the VEND/CASH SALE subcommand.

Cashless Payment - Section 7.4.4

- Begin Session (03h) - Added Level 02 Reader Z4-Z10 data.
- Malfunction/Error (0Ah) - Added error code 1100 (refund error).
- Command Out of Sequence (0Bh) - Added Z2 data.
- Eliminated Busy (0Ch) response.
- Added Level 02 Reader Revalue Approved (0Dh) response.
- Added Level 02 Reader Revalue Denied (0Eh) response.
- Added Level 02 Reader Revalue Limit Amount (0Fh) response.
- Added Level 02 Reader User File Data (10h) response.

- Added Level 02 Reader Time/Date Request (11h) response.

Cashless Payment - Section 7.4.10

- Added Level 01 Reader CASH SALE (13h/05h) VMC command.

Cashless Payment - Section 7.4.14

- Added Level 02 Reader Revalue - Request (15h/00h) VMC command.

Cashless Payment - Section 7.4.15

- Added Level 02 Reader Revalue – Limit Request (15h/01h) VMC command.

Cashless Payment - Section 7.4.17

- Obsoleted EXPANSION – Read User File (17h/01h) VMC command.

Cashless Payment - Section 7.4.18

- Obsoleted EXPANSION – Write User File (17h/02h) VMC command.

Cashless Payment - Section 7.4.19

- Added Level 02 Reader Write Time/Date File (17h/03h) VMC command.

Cashless Payment - Section 7.5

- Further defined the non-response time with the “Application Maximum Response Time” Z7.

Cashless Payment - Section 7.6 (original ICP Spec)

- Moved this section (ICP Payment Media Return Button) to Section 7.3.2.

Cashless Payment - Section 7.6 (MDB/ICP Spec)

- Previously was the ICP 7.7 with no modifications.

CSC ServiceWorks – Ex. 1008
Page 14 of 270

(*this page intentionally left blank)*

CSC ServiceWorks – Ex. 1008
Page 15 of 270

Introduction

Foreword

This voluntary Standard contains basic requirements for a vending machine communication interface within the limitations given below and in the General Information section of this Standard. These requirements are based on sound engineering principles, research, field experience, and an appreciation of the problems of manufacture, installation, and use derived from consultation with and information obtained from manufacturers, users, and others having specialized experience. These requirements are subject to revision as further experience and investigation may show it necessary or desired.

NAMA, in performing its functions in accordance with its objectives, does not assume or undertake to discharge any responsibility of the manufacturer or any other party. The opinions and findings of NAMA represent its professional judgment given with due consideration to the necessary limitations of practical operation and state of the art at the time the NAMA Standard is processed. NAMA shall not be responsible to anyone for use or reliance upon Standard by anyone. NAMA shall not incur any obligation or liability for damages, including consequential damages, arising out of or in connection with the use, interpretation of, reliance upon this Standard.

Standard Review

A complete review of this standard shall be conducted at least every five years to keep requirements consistent with technology. These reviews shall be conducted by representatives from industry and user groups on the NAMA Vending Technology Standards Committee at that time.

CSC ServiceWorks – Ex. 1008
Page 16 of 270

(this page intentionally left blank)

CSC ServiceWorks – Ex. 1008
Page 17 of 270

Section 1

General Information

1.1 Introduction

This document defines a serial bus interface for electronically controlled vending machines. The interface is a 9600 baud Master-Slave arrangement where all peripherals are Slaves to a Master controller.

The intent of this document is to standardize vending machines that employ electronic control (traditionally known as vending mechanism controller - VMC) so that all vending and peripheral equipment communicates identically.

It should be noted that this document is a vending machine interface / protocol specification and **not** a vending machine system specification. Each machine manufacturer should provide a specification on the overall operation of the machine.

1.2 Operational and Application Notes

The serial bus, or Multi-Drop Bus (MDB) is configured for Master-Slave operation. There is one Master with capability of communicating with up to thirty-two peripherals. The Master is defined as the Vending Machine Controller (VMC).

Each peripheral is assigned a unique address and command set. The master will “poll” the Bus for peripheral activity. That is, each peripheral is asked for activity, and responds with either an acknowledge, negative acknowledgment, or specific data dependent on its current activity. If a peripheral does not respond within a predefined time, (t-non-response as defined in the peripheral sections) it is assumed that it is not present on the Bus.

Bus interference, or “crashes” are prevented because each peripheral only responds upon being polled. Since there is only one master, and all communication is initiated by the Master, Bus “crashes” are easily precluded.

All peripherals will recognize a disable command, or commands, sent by the Master. This allows for disabling of individual peripherals for various reasons, for example, power management techniques.

Error checking and correction is accomplished by using checksums (CHK) and a retransmit command.

CSC ServiceWorks – Ex. 1008
Page 18 of 270

1.3 Levels and Options

Since the introduction of the earliest Multi-Drop Bus specification, functional levels and operational options have been established for most of the peripherals on the MDB/ICP interface. These have provided the capability for new features to be implemented as new requirements and features were needed for the international vending industry.

1.3.1 Levels

Levels of peripheral functionality were established when a major change occurred in the peripheral that added extended commands and responses. Due to potential conflicts between a VMC level and a peripheral level, neither the VMC nor the peripheral should issue a command or reply with a response that is not supported by the other device.

The VMC must initially determine (via the appropriate STATUS or SETUP command) the level of a peripheral before determining which commands it can issue to that device. **A VMC must only send commands that are supported by the peripheral.** For example, a Level 3 command may only be issued to a Level 3 or higher peripheral and must not be issued to a Level 1 or 2 peripheral.

The Cashless Payment and the Universal Satellite Device can also learn the respective level of the VMC for that device. This information is sent via the SETUP command. **It is the responsibility of the peripheral to only send responses that are supported by the VMC.** For example, a Level 3 response may only be sent to a Level 3 or higher VMC and must not be sent to a Level 1 or 2 VMC. Effectively, the VMC and peripheral should support the highest common level.

For total compatibility, VMCs and peripherals should support all lower levels. **For new designs after July 2000, it is strongly recommended that VMCs and peripherals must support all lower levels.** Commercial or regional issues may cause machine or peripheral manufacturers to implement only specific levels; however, this is a decision (and risk) made by the machine or peripheral manufacturer.

1.3.2 Options

Options were established in the peripherals to provide various additional operational features that may be required for specific vending applications. As the name implies, these features are “above and beyond” the standard core of required functionality.

At power on and after a Bus Reset or a RESET command, all options are disabled. During the initialization command sequences, the VMC determines the optional features supported by the peripherals. The VMC will then enable the features it is going to use. Until the feature is enabled, it is the responsibility of the peripheral to ignore feature specific commands and not respond with feature specific responses.

CSC ServiceWorks – Ex. 1008
Page 19 of 270

1.3.3 Currently Established Levels and Options

The following table provides a brief description of each of the currently established levels and options of the various MDB/ICP peripherals. Please refer to the specific sections for each device for more detailed information.

Peripherals	Levels	Options	Description
Coin Changer	1	n/a	Never released
	2	none	Supports standard commands
	3	below	Supports Expansion ID command and optionally supports commands for features below
		b0	Alternative Payout Method
		b1	Extended Diagnostics
		b2	Controlled Manual Fill and Payout
		b3	File Transport Layer (FTL)
Bill Validator	1	none	Supports standard commands and Expansion ID command without options
	2	below	Supports expansion ID command with options and optionally supports commands for features below
		b0	File Transport Layer (FTL)
Cashless Device #1 & #2	1	below	Supports standard commands and Expansion ID command. Readers do not have revaluation capability
		b0*	Reader is capable of restoring funds to card
		b1*	Reader is multivend capable
		b2*	Reader has a display available
		b3*	Reader supports VEND-CASH SALE command
			*bits in the SETUP-Config command
	2	above	Supports Revalue, Time/Date, Read User File (obsolete), and Write User File (obsolete) commands

CSC ServiceWorks – Ex. 1008
Page 20 of 270

Peripherals	Levels	Options	Description
Cashless Device #1 & #2 (continued)	3	above & below	Supports expansion ID command with options and optionally supports commands for features below (bits in the Level 3 Expansion ID command)
		b0**	File Transport Layer (FTL)
		b1**	16 or 32 Bit Monetary Format
		b2**	Multi Currency / Multi Lingual
		b3**	Negative Vend
		b4**	Data Entry
			**bits in the Level 3 Expansion ID command
Communications Gateway	1	none	Obsolete (former Audit Unit)
	2	none	Obsolete (former Audit Unit)
	3	below	Supports Expansion ID command and optionally supports commands for features below
		b0	File Transport Layer (FTL)
		b1	Verbose Mode
Universal Satellite Device (USD)	1	below	Supports all basic commands and optionally supports commands for features below
		b0	USD is capable of storing and controlling pricing
		b1	USD is capable of selecting items to vend
		b2	File Transport Layer (FTL)
Coin Hopper or Tube - Dispenser	1	below	Supports Expansion ID command and optionally supports commands for features below
		b0	File Transport Layer (FTL)

CSC ServiceWorks – Ex. 1008
Page 21 of 270

Section 2

Communication Format

2.1 Byte Format

Baud Rate:	9600 NRZ
Serial Bit Format:	1 Start Bit 8 Data Bits 1 Mode Bit 1 Stop Bit ——————— 11 Bits Total

LSB										MSB
Start	0	1	2	3	4	5	6	7	Mode	Stop

Mode Bit: Master-to-Peripheral

The mode bit differentiates between ADDRESS bytes and DATA bytes. ADDRESS bytes must be read by all peripherals, DATA bytes are only read by the peripheral that has been addressed.

The mode bit is set (logic one) to indicate an ADDRESS byte, and not set (logic zero) to indicate a DATA byte.

Mode Bit: Peripheral-to-Master

The mode bit must be set on the last byte sent when data is sent from a Slave to the Master.

CSC ServiceWorks – Ex. 1008
Page 22 of 270

2.2 Block Format

Master-to-Peripheral

A Communication Block for Master-to-Slave transmissions is defined as an Address byte, optional data bytes, and a CHK byte. A block is limited to a maximum of thirty-six (36) bytes.

The upper five bits (MSB) of the Address Byte will be used for addressing. That is, bits 7,6,5,4,3 of the previous byte description will be used for addressing.

The lower three bits (i.e. 2,1,0) of the Address Byte will contain peripheral specific commands. This will allow up to eight instructions to be embedded in the first byte of a block.

The VMC Master will respond to data from a peripheral with an Acknowledgment (ACK), Negative Acknowledgment (NAK), or Retransmit (RET). These are defined later in the document. The 5 mS time-out (t-response) described in the Bus Timing section of this document is the equivalent of a NAK.

If the addressed Slave does not respond within the 5 mS time-out (silence), the Master may repeat the same command, or send a different command, until it receives an answer or until the end of the Non-Response time, as defined in the peripheral sections. See Example in 2.5D. The RESET command should not be used as a recovery method to a 5 mS time-out (t-response) until after exceeding the Non-response time. The VMC may send commands to any other peripheral during this time.

Peripheral-to-Master

A Communication Block for Slave-to-Master transmissions consists of either a data block and a CHK byte, a acknowledgment (ACK), or a negative acknowledgment (NAK).

The 5 mS time-out (t-response) described in the Bus Timing section of this document is the equivalent of a NAK command. In addition, it is recommended that the peripheral use this time-out as the NAK when a reception error of the ADDRESS byte occurs. This will prevent several peripherals from trying to simultaneously respond with a NAK.

A data block consists of one or more data bytes followed by a CHK byte. The CHK byte is defined later in this document.

The data block and CHK byte are limited to a maximum size of 36 bytes.

A CHK byte is not required when a peripheral responds with NAK or ACK byte. ACK and NAK are defined later in this document.

CSC ServiceWorks – Ex. 1008
Page 23 of 270

The peripheral must set the mode bit on the last byte sent to signify end of transmission. This will be either the CHK byte of a block, a NAK byte, or an ACK byte. The mode bit must not be set except for the conditions above.

A peripheral response of ACK or NAK signifies the end of the exchange.

When a peripheral responds with a data block, the VMC must respond with an ACK, NAK or RET. If the Master cannot respond within the 5 mS time-out (t-response) the peripheral must repeat the data block, or append it, at the next possible occasion (i.e. to a later POLL). The same behavior is to apply when the Master responds with NAK.

CHK Byte

A CHK byte must be sent at the end of each block of data. The CHK byte is a checksum calculated by adding the ADDRESS byte and all DATA bytes. The CHK byte is not included in the summation. The carry bit for CHK additions is ignored since the CHK byte is limited to eight bits.

The following example shows a CHK byte calculation for a possible response to a STATUS command sent to a USA changer slave. See section 5 for details of byte meanings.

02H	Changer feature level
00H	Country code for USA
01H	Country code for USA
05H	Coin scaling factor
02H	Decimal place
00H	Coin type routing
07H	Coin type routing
01H	Coin type 0 has value of 1 scaling factor
02H	Coin type 1 has value of 2 scaling factor
05H	Coin type 2 has value of 5 scaling factor
14H	Coin type 3 has value of 20 scaling factor
FFH	Coin type 4 is a token
12CH	Therefore the CHK byte would be equal to 2CH

A checksum will be performed on all full blocks of communication. A checksum will not be performed on ACK, NAK, or RET bytes.

CSC ServiceWorks – Ex. 1008
Page 24 of 270

Response Codes

The following codes are reserved for the ACK, NAK and RET bytes:

ACK	00H	(acknowledgment/checksum correct)
RET	AAH	(Retransmit the previously sent data. **Only the VMC can transmit this byte**)
NAK	FFH	(Negative acknowledge) The VMC and peripheral must also recognize the 5 mS time-out (t-response) as a NAK.

NOTE: To improve system reliability it is recommended that when receiving ACK, NAK, or RET the receiving device counts the number of bits set in the byte. This method will require at least two bit errors in the byte before the byte can be mis-interpreted.

Bus Reset

The VMC may reset all peripherals by pulling the transmit line “active” for a minimum of 100 mS. This informs all peripherals to abort any activity and return to its power-on reset state. Details of this state for each peripheral are provided in later sections of this document. It is recommended that the VMC re-initialize each peripheral after this type of reset.

CSC ServiceWorks – Ex. 1008
Page 25 of 270

2.3 Peripheral Addresses

The addresses below are defined. Note again that the bits shown are the upper five bits (7,6,5,4,3) of the Address Byte and will be used for all addressing including the File Transport Layer described in Section 2.6. The lower three bits (2,1,0) are used for the command.

Address		Definition
00000xxxB	(00H)	Reserved for VMC
00001xxxB	(08H)	Changer
00010xxxB	(10H)	Cashless Device #1
00011xxxB	(18H)	Communications Gateway
00100xxxB	(20H)	Display
00101xxxB	(28H)	Energy Management System
00110xxxB	(30H)	Bill Validator
00111xxxB	(38H)	Reserved for Future Standard Peripheral
01000xxxB	(40H)	Universal Satellite Device #1
01001xxxB	(48H)	Universal Satellite Device #2
01010xxxB	(50H)	Universal Satellite Device #3
01011xxxB	(58H)	Coin Hopper or Tube - Dispenser
01100xxxB	(60H)	Cashless Device #2
01101xxxB	(68H)	Reserved for Future Standard Peripherals
.	.	.
.	.	.
.	.	.
11011xxxB	(D8H)	Reserved for Future Standard Peripherals
11100xxxB	(E0H)	Experimental Peripheral #1
11101xxxB	(E8H)	Experimental Peripheral #2
11110xxxB	(F0H)	Vending Machine Specific Peripheral #1
11111xxxB	(F8H)	Vending Machine Specific Peripheral #2

CSC ServiceWorks – Ex. 1008
Page 26 of 270

Experimental Peripheral Addresses

Experimental Peripheral addresses 11100xxxB (E0H) and 11101xxxB (E8H) are reserved for use by manufacturers when designing and field testing potential new MDB/ICP devices. These addresses are **temporary** and once the new device is approved by NAMA and the EVA, the device will be assigned a different permanent peripheral address. Use of the Experimental Peripheral addresses shall be limited to “in house” testing and “closed site” field trials. Manufacturers must understand that any devices in the field with Experimental Peripheral addresses must be recalled or updated to the permanent address if the device is approved by NAMA and the EVA. If not approved by NAMA and the EVA, the devices must be recalled or have their addresses changed to the Vending Machine Specific peripheral addresses described below.

Vending Machine Specific Peripheral Addresses

Vending Machine Specific peripheral addresses (addresses 11110xxxB (F0H) and 11111xxxB (F8H)) are reserved for Non-Standard or proprietary applications. These devices are allowed a unique set of commands.

All other peripherals are defined as Standard devices. These peripherals must follow the specifications to ensure compatibility between manufacturers.

CSC ServiceWorks – Ex. 1008
Page 27 of 270

2.4 Software Operational Rules

2.4.1 Power Budget

The VMC must regulate the power budget. That is, peripherals must be enabled and disabled dependent on power availability. The power bus is defined later in this document.

2.4.2 Bytes

During multi-byte messages the most significant byte is sent first.

> Any bytes within a command or response that are not specifically defined should be left in a 0 state. For Level 03 or lower coin mechanisms, Level 01 bill validators, and Level 01 card readers, this is not a requirement but a suggestion.

2.4.3 Polling

The following are recommendations for the methods of VMC to peripheral software operation.

> Each peripheral should be polled every 25-200 milliseconds. This can be done by the POLL command or any other appropriate command.
>
> If a peripheral has not responded to a poll for its maximum Non-Response time, the VMC should continue to poll the peripheral at least every ten seconds with a RESET command. (See Example G in Section 2.5).

2.4.4 Levels

Due to potential conflicts between a VMC level and a peripheral level, neither the VMC nor the peripheral should issue a command or reply with a response that is not supported by the other device.

The VMC must initially determine (via the appropriate STATUS or SETUP command) the level of a peripheral before determining which commands it can issue to that device. **A VMC must only send commands that are supported by the peripheral.** For example, a Level 3 command may only be issued to a Level 3 or higher peripheral and must not be issued to a Level 1 or 2 peripheral.

The Cashless Payment and the Universal Satellite Device can also learn the respective level of the VMC for that device. This information is sent via the SETUP command. **It is the responsibility of the peripheral to only send responses that are supported by the VMC.** For example, a Level 3 response may only be sent to a Level 3 or higher

CSC ServiceWorks – Ex. 1008
Page 28 of 270

VMC and must not be sent to a Level 1 or 2 VMC. Effectively, the VMC and peripheral should support the highest common level.

For total compatibility, VMCs and peripherals should support all lower levels. **For new designs after July 2000, it is strongly recommended that VMCs and peripherals must support all lower levels.** Commercial or regional issues may cause machine or peripheral manufacturers to implement only specific levels; however, this is a decision (and risk) made by the machine or peripheral manufacturer.

2.5 Typical Session Examples

A. The diagram below represents a typical transmission when a peripheral is idle.

VMC:

ADD* CHK

Peripheral:

ACK*

B. The diagram below represents a typical transmission when a peripheral has data to return.

VMC:

ADD* CHK ACK

Peripheral:

DAT DAT CHK*

C. The diagram below represents a typical transmission when the VMC has data to send.

VMC:

ADD* DAT DAT CHK

Peripheral:

ACK*

*Indicates mode bit set

CSC ServiceWorks – Ex. 1008
Page 29 of 270

D. The diagram below represents a typical transmission when the VMC determines a CHK is not correct. The VMC will respond one of two ways:

Send a NAK to the peripheral to indicate that the information was not received correctly then perform other tasks. Note: When the Master answers with NAK (or silence which is treated equally) the slave has to repeat the response, in order to ensure the execution of the response (i.e. coin reception etc.).

OR

The VMC may send a retransmit (RET) command alerting the peripheral to retransmit the previously sent data.

VMC:

ADD* DAT CHK RET ACK

Peripheral:

DAT DAT CHK* DAT DAT CHK*

*Indicates mode bit set.

E. This diagram represents a situation where the peripheral does not respond within the 5 mS time-out (t-response).

VMC:

ADD* CHK ADD* CHK

Peripheral:

[silence…] ACK*

CSC ServiceWorks – Ex. 1008
Page 30 of 270

F. This diagram represents a situation where the peripheral does not respond to a command and after its maximum Non-Response time, is reset by the controller.

Controller		Peripheral	Comment
Command X	→		
	←	Response	Normal response
Command Y	→		
	←	[silence…]	No response
Command Y	→		
	←	[silence…]	No response
Command Y	→		
	←	[silence…]	No response
			Peripheral does not response within its allocated Non-Response Time.
RESET	→		Software Reset
	←	[silence…]	Peripheral in initialization routine
RESET	→		
	←	ACK	Peripheral operational again
POLL	→		
	←	JUST RESET	Peripheral indicates finished RESET processing
ACK	→		
			Peripheral initialization sequence is performed as recommended in each peripheral section.

CSC ServiceWorks – Ex. 1008
Page 31 of 270

G. This diagram represents a situation where the peripheral is disconnected or goes offline. The controller should send a RESET command every 10 seconds to determine if, and when, the peripheral becomes active again.

Controller		Peripheral	Comment
Command X	→		
	←	Response	Normal response
Command Y	→		
	←	[silence…]	No response
Command Y	→		
	←	[silence…]	No response
Command Y	→		
	←	[silence…]	No response
			Peripheral does not response within its allocated Non-Response Time.
RESET	→		Software Reset
	←	[silence…]	Peripheral offline
RESET	→		Software Reset
	←	[silence…]	Peripheral offline
			Wait 10 seconds
RESET	→		
	←	[silence…]	Peripheral offline
			Wait 10 seconds
RESET	→		
		[silence…]	Peripheral offline
			Wait 10 seconds
RESET	→		
		[silence…]	Peripheral offline

CSC ServiceWorks – Ex. 1008
Page 32 of 270

2.6 File Transport Layer

The **F**ile **T**ransport **L**ayer (**FTL**) provides a method to send and/or receive high level information between peripherals or between a peripheral and the VMC. It is **not** intended to be used for standard vending credit and control functions. An example would be loading new validation parameters into a coin changer or bill validator.

Since the MDB/ICP interface is "driven" by the VMC, it has to be a network manager for all FTL data transfers. It acts as a temporary mailbox and data switch for FTL blocks; however, the information that is sent via FTL does not have to be interpreted by the VMC. The VMC simply uses the destination and source address information provided in the MDB/ICP command and response structure to forward the data to the proper recipient.

2.6.1 FTL Process Overview

If a peripheral needs to transfer data to another peripheral (or the VMC):
- The VMC must poll the peripheral,
- The peripheral must answer with a "REQUEST TO SEND",
- The VMC must get approval to forward data (if necessary),
- The VMC requests the first data block,
- The VMC ACKs the first block and forwards to destination,
- The process repeats until all blocks are sent.

If the VMC needs to transfer data to a peripheral:
- The VMC must send a "REQUEST TO SEND",
- The peripheral approves or denies the transfer request,
- If approved, the VMC sends the first data block,
- The peripheral ACKs the first data block,
- The process repeats until all blocks are sent.

If a peripheral (A) needs to request a transfer of data from another peripheral (B):
- The VMC must poll the peripheral A,
- Peripheral A must send a "REQUEST TO RECEIVE",
- The VMC forwards the request to peripheral B,
- Peripheral B decides to honor the request or not,
- If approved, peripheral B sends the first data block,
- The VMC forwards the data block to peripheral A,
- The process repeats until all blocks are sent.

2.6.2 FTL Detailed VMC Operation

CSC ServiceWorks – Ex. 1008
Page 33 of 270

The VMC must act as a network manager, it is responsible for checking peripheral status and managing network resources as described below, it must:

- Be aware of which peripherals are active and support the FTL. If a file transfer is requested involving a peripheral that does not support it, the VMC should deny the transfer using RETRY/DENY defined later.
- Poll peripherals to become aware that a data transfer is requested.
- Read data blocks from selected peripherals.
- If VMC receives a NAK, it should attempt to finish current command/response up to 5 times. After that, it should abort file transfer as defined by the protocol.
- Send data blocks to destination device, if not the VMC itself.
- Repeat these steps for all data blocks, as needed.

2.6.3 FTL General Operation

- The FTL "session" would transfer a "file" using several "blocks". The "Dest" and "Src" are switched by the VMC directing each block to its destination.
- All responses can be sent immediately after receipt of command or the command can be ACK'ed and the response sent in a delayed fashion (meeting all appropriate time-outs). However, FTL responses must NOT be combined with responses to any other commands, at any time.
- File transfers less than 256 blocks are terminated by sending an empty data file (SEND BLOCK with no data). File transfers of exactly 256 blocks are terminated by block #FE followed by block #FF.
- It is recommended that files larger than one block:
  1) Include a CRC in their data. The transport layer is <u>not</u> responsible for checking for correct CRCs.
  2) Include a time out mechanism to prevent system dead locks. The transport layer is **<u>not</u>** responsible for checking for dead locked file transfers.
- To prevent a system dead lock, the VMC must poll other peripherals during all data transfers and service them accordingly.
- Since the VMC is not knowledgeable about the contents of the file transfer it should not disable any peripherals due to a transfer request. This will be the responsibility of the peripherals themselves. They may internally disable and report so to the VMC if possible, or they may just stop responding to the VMC until ready. The latter may cause the VMC to try to reset the peripheral.

2.6.4 FTL Command and Response Sets For All Components

The table below defines the VMC commands and peripheral responses that occur during an FTL data transfer. Note that the peripheral responses can either be immediate to the VMC's command or delayed and provided to a subsequent POLL. Definitions are provided on the following page.

CSC ServiceWorks – Ex. 1008
Page 34 of 270

Command / Response	VMC Cmd[1]	Resp	Source Data (bytes)	Destination Response
REQ TO SEND	α7/FE	1F	Dest (1) Src (1) File ID (1) Length (1) Control (1)	OK TO SEND or RETRY/DENY
OK TO SEND	α7/FD	1E	Dest (1) Src (1)	SEND BLOCK (repeated until whole file is transferred)
SEND BLOCK	α7/FC	1D	Dest (1) Block # (1) Data (1 to 31)	ACK
RETRY/DENY	α7/FB	1C	Dest (1) Src (1) Retry delay (1)	ACK
REQ TO RCV	α7/FA	1B	Dest (1) Src (1) File ID (1) Max Length (1) Control (1)	SEND BLOCK (repeated until whole file is transferred) or RETRY/DENY

Note 1: The α7 represents the address of the destination device (defined in Section 2.3) logically OR'd with a hexadecimal 0x07.

CSC ServiceWorks – Ex. 1008
Page 35 of 270

Dest **1 byte**

The destination address of the peripheral where the data block (**not the whole file**) is being sent to. All addresses refer to the standard MDB defined peripheral addresses as defined in Section 2.3. Note that 00000xxx (00H) will be used for the VMC. Examples are a changer (08H), audit system (18H), bill validator (30H), and universal satellite device #2 (48H).

Src **1 byte**

The source address of the peripheral where the data block (**not the whole file**) is being sent from. All addresses refer to the standard MDB defined peripheral addresses as defined in Section 2.3. Note that 00000xxx (00H) will be used for the VMC. Examples are the same as in the **Dest** above.

File ID **1 byte**

The type of information desired. NAMA will maintain a list of standard file ID's and a definition of what each file type means. Note that if a device responds with a "Retry delay" of FFH it should be interpreted that this device does not support the requested function.

Currently defined file IDs include:

00H: Manufacture ID information. This file must start with the manufactures three character manufactures code, anything after that would be up to the manufacture to define.

01H: DTS defined file. This file must follow the format defined in the EVA-DTS standard. This would include the DXS record as well as all data up to and including the DXE record.

0FH to 0FFH: This range of files may be used for Manufacturer Specific information. The content and format of these files are left up to the manufacturer to define.

Additional ID proposals must be evaluated by the NAMA MDB/ICP technical standard committee.

(Max) Length **1 byte**

The total number of blocks that will (can) be included in the entire file. This byte should be used as a counter to determine the amount of data blocks to be transferred.

CSC ServiceWorks – Ex. 1008
Page 36 of 270

Control **1 byte**

This byte contains information that can be used by the VMC and peripherals to determine how the data transfer is conducted. Included controls are:

b0: Reset after transfer. The receiving peripheral should reset itself after the file transfer is complete.
b1: End of File. The last block of the current FTL session contains the end of this file. If clear (=0), then another FTL session will follow with additional blocks. If set (=1), then this is the last (or only) FTL session to be sent.
b2 - b7: Not used, must be set to 0

Block # **1 byte**

The sequential number of this block, within the total file, that is being requested/sent. All data blocks must be identified by a block number, counting up from 0 (first block) to 255.

Data Block **1 to 31 byte(s)**

The actual data portion of the block. All data must fit into a 31 byte, or less, string. The standard MDB CHK byte will signify the end of block. (Peripherals will have to use inter-byte time out when receiving blocks from the VMC.) Knowledge of the contents of this data is only required by the source and destination devices.

Retry Delay **1 byte**

A time delay that the sender should wait before trying to re-send the entire data file again. If a device is not capable of receiving a file in its current state, this byte should represent the number of seconds before it will be ready to receive the data. If the device simply refuses to accept the file it must answer with a “Retry Never” signified by a 00H retry delay. If the device is not present, block synchronization is lost, or other failure mode arises a “Retry Never” should be used to abort/deny the current file transfer.

CSC ServiceWorks – Ex. 1008
Page 37 of 270

File Transport Layer Examples

Below are examples of data transfers between the VMC and a peripheral or between two different peripherals via the VMC.

SUCCESSFUL TRANSFER – VMC TO PERIPHERAL A				
Peripheral A		**VMC**	**Peripheral B**	**Comments**
	←	REQ TO SEND (α7/FE)		Request to send "n" blocks
OK TO SEND (1E)	→			
	←	ACK		
	←	SEND BLOCK (α7/FC)		Repeated "n" times
ACK	→			

DENIED TRANSFER – VMC TO PERIPHERAL A				
Peripheral A		**VMC**	**Peripheral B**	**Comments**
	←	REQ TO SEND (α7/FE)		
RETRY/00 (1C)	→			Denied
	←	ACK		

SUCCESSFUL REQUEST – VMC TO PERIPHERAL A				
Peripheral A		**VMC**	**Peripheral B**	**Comments**
	←	POLL (varies)		
REQ TO RCV (1B)	→			Request receive "n" blocks
	←	ACK		
	←	SEND BLOCK (α7/FC)		Repeated "n" times
ACK	→			

DENIED REQUEST – VMC TO PERIPHERAL A				
Peripheral A		**VMC**	**Peripheral B**	**Comments**
	←	POLL (varies)		
REQ TO RCV (1B)	→			Request receive "n" blocks
	←	ACK		
	←	RETRY/00 (α7/FB)		Denied
ACK	→			

CSC ServiceWorks – Ex. 1008
Page 38 of 270

VMC ABORTED TRANSFER – VMC TO PERIPHERAL A				
Peripheral A		**VMC**	**Peripheral B**	**Comments**
	←	REQ TO SEND (α7/FE)		Request to send "n" blocks
OK TO SEND (1E)	→			
	←	ACK		
	←	SEND BLOCK (α7/FC)		Repeated "n" times
ACK	→			
	←	RETRY/00 (α7/FB)		Aborted!
ACK	→			

PERIPHERAL ABORT TRANSFER – VMC TO PERIPHERAL A				
Peripheral A		**VMC**	**Peripheral B**	**Comments**
	←	REQ TO SEND (α7/FE)		Request to send "n" blocks
OK TO SEND (1E)	→			
	←	ACK		
	←	SEND BLOCK (α7/FC)		
RETRY/00 (1C)	→			Aborted!
	←	ACK		

SUCCESSFUL TRANSFER – PERIPHERAL A TO VMC				
Peripheral A		**VMC**	**Peripheral B**	**Comments**
	←	POLL (varies)		
REQ TO SEND (1F)	→			Request to send "n" blocks
	←	ACK		
	←	OK TO SEND (α7/FD)		
SEND BLOCK (1D)	→			Repeated "n" times
	←	ACK		

CSC ServiceWorks – Ex. 1008
Page 39 of 270

DENIED TRANSFER – PERIPHERAL A TO VMC				
Peripheral A		**VMC**	**Peripheral B**	**Comments**
	←	POLL (varies)		Request to send "n" blocks
REQ TO SEND (1F)	→			
	←	ACK		
	←	RETRY/00 (α7/FB)		Denied
ACK	→			

SUCCESSFUL TRANSFER – PERIPHERAL A TO PERIPHERAL B				
Peripheral A		**VMC**	**Peripheral B**	**Comments**
	←	POLL (varies)		
REQ TO SEND (1F)	→			Request to send "n" blocks
	←	ACK		
		REQ TO SEND (1F) (α7/FE)	→	
			← OK TO SEND (1E)	
		ACK	→	
	←	OK TO SEND (α7/FD)		
SEND BLOCK (1D)	→			Repeated "n" times
	←	ACK		
		SEND BLOCK (α7/FC)	→	
			← ACK	

DENIED TRANSFER – PERIPHERAL A TO PERIPHERAL B				
Peripheral A		**VMC**	**Peripheral B**	**Comments**
	←	POLL (varies)		
REQ TO SEND (1F)	→			Request to send "n" blocks
	←	ACK		
		REQ TO SEND (1F) (α7/FE)	→	
			← RETRY/00 (1C)	Denied
		ACK	→	
	←	RETRY/00 (α7/FB)		
ACK	→			

CSC ServiceWorks – Ex. 1008
Page 40 of 270

SUCCESSFUL REQUEST - PERIPHERAL A TO PERIPHERAL B					
Peripheral A		**VMC**		**Peripheral B**	**Comments**
	←	POLL (varies)			
REQ TO RCV (1B)	→				Request receive “n” blocks
	←	ACK			
		REQ TO RCV (α7/FA)	→		
			←	SEND BLOCK (1D)	Repeated “n” times
		ACK	→		
	←	SEND BLOCK (α7/FC)			
ACK	→				

DENIED REQUEST – PERIPHERAL A TO PERIPHERAL B					
Peripheral A		**VMC**		**Peripheral B**	**Comments**
	←	POLL (varies)			
REQ TO RCV (1B)	→				Request receive “n” blocks
	←	ACK			
		REQ TO RCV (α7/FA)	→		
			←	RETRY/00 (1C)	Denied
		ACK	→		
	←	RETRY/00 (α7/FB)			
ACK	→				

PERIPHERAL A TRANSFER TO PERIPHERAL B – ABORTED BY A					
Peripheral A		**VMC**		**Peripheral B**	**Comments**
	←	POLL (varies)			
REQ TO SEND (1F)	→				Request to send "n" blocks
	←	ACK			
		REQ TO SEND (α7/FE)	→		
			←	OK TO SEND (1E)	
		ACK	→		
	←	OK TO SEND (α7/FD)			
SEND BLOCK (1D)	→				
	←	ACK			
		SEND BLOCK (α7/FC)	→		
			←	ACK	
		. . .			Repeated "n" times
	←	POLL (varies)			
RETRY/00 (1C)	→				Aborted!
	←	ACK			
		RETRY/00 (α7/FB)	→		
			←	ACK	

CSC ServiceWorks – Ex. 1008
Page 42 of 270

PERIPHERAL A TRANSFER TO PERIPHERAL B – ABORTED BY B					
Peripheral A		**VMC**		**Peripheral B**	**Comments**
	←	POLL (varies)			
REQ TO SEND (1F)	→				Request to send "n" blocks
	←	ACK			
		REQ TO SEND (α7/FE)	→		
			←	OK TO SEND (1E)	
		ACK	→		
	←	OK TO SEND (α7/FD)			
SEND BLOCK (1D)	→				
	←	ACK			
		SEND BLOCK (α7/FC)	→		
			←	ACK	
		. . .			Repeated "n" times
	←	POLL (varies)REQ BLOCK (α7/FD)			
SEND BLOCK (1D)	→				
	←	ACK			
		SEND BLOCK (α7/FC)	→		
			←	RETRY/00 (1C)	Aborted!
		ACK	→		
	←	RETRY/00 (α7/FB)			
ACK	→				

CSC ServiceWorks – Ex. 1008
Page 43 of 270

Section 3

Bus Timing

3.1 Timing Definitions

Baud rate	=	The rate of bit transfer per second.
t inter-byte (max.)	=	The maximum time allowed between bytes in a block transmission.
t response (max.)	=	The maximum time any device, master or peripheral, will take to respond to a valid communication.
t break (VMC)	=	The minimum time of the Bus Reset signal sent by the VMC to reset all peripherals.
t setup	=	The minimum set-up time before the VMC attempts to communicate after a reset signal. Peripheral devices may choose to not respond for up to the non-response time defined in each peripheral section.

3.2 Timing Specifications

Baud Rate	=	9600 +1%/-2% NRZ
t inter-byte (max.)	=	1.0 mS
t response (max.)	=	5.0 mS
t break (min.)	=	100 mS
t setup (min.)	=	200 mS

CSC ServiceWorks – Ex. 1008
Page 44 of 270

NOTE: All peripherals have the option of not responding to the VMC. Non-response timing is defined in the peripheral specification.

3.3 Timing Diagram

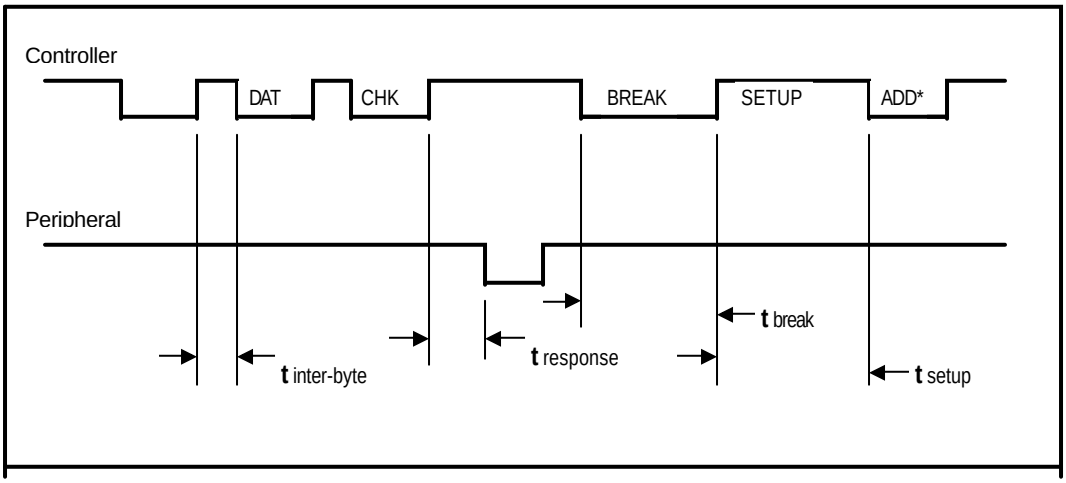

NOTE: * indicates that the mode bit is set

CSC ServiceWorks – Ex. 1008
Page 45 of 270

Section 4

Hardware Specification

4.1 Bus Power Supply Definition

The information below defines the minimum VMC voltage output. The actual current ratings per peripheral will be defined in their respective sections.

Power supply filtering is optional, therefore if a peripheral requires more power, or tighter regulation, they may elect to supply their own power, or filtering, from available sources elsewhere in the machine.

VMC Voltage Output:

Minimum	=	20 VDC rms.(rectified and optionally filtered)
Nominal	=	34 VDC unreg.(rectified and filtered) 24 VDC rms.(rectified only)
Maximum	=	42.5* VDC(ripple voltage upper limit) * High line input may allow 45 VDC peak (max.).

4.2 Bus Transmitter / Receiver Specification

The following section describes the 5V, optically isolated, current loop system between the Master and the Slave.

VMC Master:

Transmit:

Minimum source current (active):	100 mA @ 4V
Maximum leakage current (inactive):	100 uA

NOTES: 1) The transmit line must be able to withstand a short while in the active mode.

2) 15 mA should be added for each peripheral over six.

CSC ServiceWorks – Ex. 1008
Page 46 of 270

Receive:

Minimum input current (active): 15 mA @ 1V
Maximum input current (inactive): 1 mA

Peripheral Slave:

Receive:

Maximum input current (active): 15 mA @ 4V
Maximum input current (inactive): 100 uA

Transmit:

Minimum sink current (active): 15 mA @ 1V
Maximum leakage current (inactive): 30 uA

4.3 Connector Specification

Connector assemblies supplied by the NAMA approved suppliers, noted in Section 4.3.6, are intermateable and meet or exceed the minimum requirements identified in Sections 4.3.1, 4.3.2, 4.3.3, 4.3.4, and 4.3.5 when tested in the mated condition. NAMA must approve any supplier changes to the fit, form, or function. Discrete components, i.e. contacts, are not required to be inter-changeable between supplier products.

4.3.1. **Material**

4.3.1.1. Terminal: Phosphor Bronze
4.3.1.2. Plating: Tin or Tin/Lead
4.3.1.3. Housing: UL 94V-2 nylon

4.3.2. **Ratings**

Section	Item	Requirement
4.3.2.1.	Rated Voltage (Max)	600 Volts AC
4.3.2.2.	Maximum Rated Current (Six Circuit)	7 Amps
4.3.2.3.	Ambient Temperature Range (including terminal T-rise)	-40°C to +105°C

CSC ServiceWorks – Ex. 1008
Page 47 of 270

4.3.3. **Electrical Performance**

Section	Item	Test Condition	Requirement
4.3.3.1.	Contact Resistance	Mate Connectors, measure by dry circuit, 20 mV max., 10 mA. Wire resistance shall be removed from the measured value.	10 mΩ Max.
4.3.3.2.	Insulation Resistance	Mate Connectors, apply 500V DC between adjacent terminal or ground.	1000 MΩ Min.
4.3.3.3.	Dielectric Strength	Mate Connectors, apply 1500V AC for 1 minute between adjacent terminal or ground.	No Breakdown.

4.3.4. **Mechanical Performance**

Section	Item	Test Condition			Requirement
4.3.4.1.	Insertion and Withdrawal Force	Insert and withdraw connectors at a speed rate of 25 +/- 3mm / minute.			Noted Below
	6 Pos Insertion Max.		6 Pos Withdrawal Min.		
	Initial	30th cycle	Initial		30th cycle
	41.2 N	38.2 N	2.9 N		2.4 N
4.3.4.2.	Crimping Pull Out Force	Mount the crimped terminal, apply axial force on the wire at a rate of 25 +/- 3mm minute.			
		16 AWG			88 N Min.
		18 AWG			88 N Min.
		20 AWG			59 N Min.
		22 AWG			39 N Min.
		24 AWG			29 N Min.
		26 AWG			20 N Min.
		28 AWG			10 N Min.
4.3.4.3.	Terminal Insertion Force	Insert the crimped terminal into the housing.			15 N Max.
4.3.4.4.	Terminal/Housing Retention Force	Apply axial pull out force at the speed rate of 25 +/- 3mm / minute.			22 N Min.
4.3.4.5.	Locking / Unlocking Force	Measure force to lock & unlock connector housings (without contacts) at a rate of 25 +/- 3mm / minute.			Lock: 30 N Max. Unlock: 50 N Min.

CSC ServiceWorks – Ex. 1008
Page 48 of 270

4.3.5. **Environmental Performance**

Section	Item	Test Condition	Requirement	
4.3.5.1.	Repeated Insertion / Withdrawal	When mated up to 30 cycles repeatedly by rate of 10 cycles per minute.	Contact Resistance	20 mΩ Max.
4.3.5.2.	Temperature Rise	Carrying rated current load.	30°C Rise Max.	
4.3.5.3.	Vibration	Amplitude: 1.5mm P-P Sweep Time: 10-55-10 Hz in 1 minute. Duration: 2 hours in each X,Y,Z axis.	Appearance	No Damage
			Contact Resistance	20 mΩ Max.
			Discontinuity	1 μ sec. Max.
4.3.5.4.	Shock	50 G; 3 strokes in each X,Y,Z axis.	Appearance	No Damage
			Contact Resistance	20 mΩ Max.
			Discontinuity	1 μ sec Max.
4.3.5.5.	Heat Resistance	105 +/- 2°C, 96 hours	Appearance	No Damage
			Contact Resistance	20 mΩ Max.
4.3.5.6.	Cold Resistance	-40 +/- 3°C, 96 hours	Appearance	No Damage
			Contact Resistance	20 mΩ Max.
4.3.5.7.	Humidity	Temperature: 60 +/- 2°C Relative Humidity: 90% - 95% Duration: 96 hours	Appearance	No Damage
			Contact Resistance	20 mΩ Max.
			Dielectric Strength	No Breakdown
			Insulation Resistance	1000 MΩ Min.
4.3.5.8.	Temperature Cycling	5 Cycles: a) - 55°C ; 30 Minutes b) 105°C ; 30 Minutes	Appearance	No Damage
			Contact Resistance	20 mΩ Max.
4.3.5.9.	Salt Spray	48 +/- 4 hours exposure to salt spray from 5 +/- 1% solution at 35 +/- 2°C.	Appearance	No Damage
			Contact Res.	20 mΩ Max.
4.3.5.10.	SO_2 Gas	24 hour exposure to 50 +/- 5 ppm SO_2 gas at 40 +/- 2°C.	Appearance	No Damage
			Contact Res.	Max.

CSC ServiceWorks – Ex. 1008
Page 49 of 270

4.3.6 **Approved Suppliers and Part Numbers**

4.3.6.1. Suppliers

Molex : Mini-Fit, Jr.™ Product
AMP: AMP-DUAC™ Product

4.3.6.2. Peripherals

Connector: Six (6) Circuit Receptacle Housing

Molex 39-01-2060
AMP P/N 106527-6

Terminals: Female Contacts (sockets), Tin

Molex 39-00-0065
AMP P/N 106528-2 or 106529-2

Strain Relief: The strain relief shall not exceed a Maximum Form Factor of 0.85 inch wide x 0.75 inch high x 1.90 inch long, excluding integrated hinges and wire ties.

Molex 15-04-0296
AMP P/N 1375618-1

4.3.6.3. Bus Harness

Connector: Six (6) Circuit Plug Housing

Molex 39-01-2061
AMP P/N 794550-6 or 794542-6

Terminals: Male Contacts (pins), Tin

Molex 39-00-0067
AMP P/N 794578-1 or 794576-1

4.3.6.4. VMC Connector (Direct PCB Mount)

Vertical Header: Male Contacts (pins), Tin

Molex 39-28-1063
AMP P/N 794664-6

Right Angle Header: Male Contacts (pins), Tin

Molex 39-30-1060
AMP P/N 794448-1

CSC ServiceWorks – Ex. 1008
Page 50 of 270

4.3.6.5. Approved Parts – Alternate Form Factors

Select applications may require connector configurations with alternate form factors. Alternate form factor connectors may be used provided they are:

- provided by the Approved Suppliers listed
- part of the Approved Supplier Product Family portfolio
- intermateable with the approved connector part numbers listed
- meet the performance objectives set forth in this specification

CSC ServiceWorks – Ex. 1008
Page 51 of 270

Connector Pin-out:

Line 1 - 34 VDC
Line 2 - DC Power Return
Line 3 - N/C
Line 4 - Master Receive
Line 5 - Master Transmit
Line 6 - Communications Common

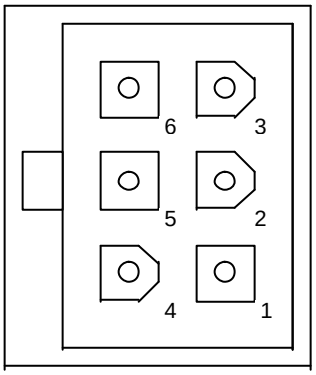

Peripheral Connector
Face View
Receptacle
(Sockets)

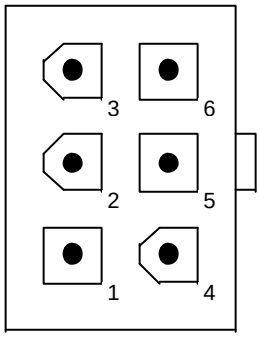

VMC / Bus Connector
Face View
Header
(Pins)

CSC ServiceWorks – Ex. 1008
Page 52 of 270

4.4 Example Schematic

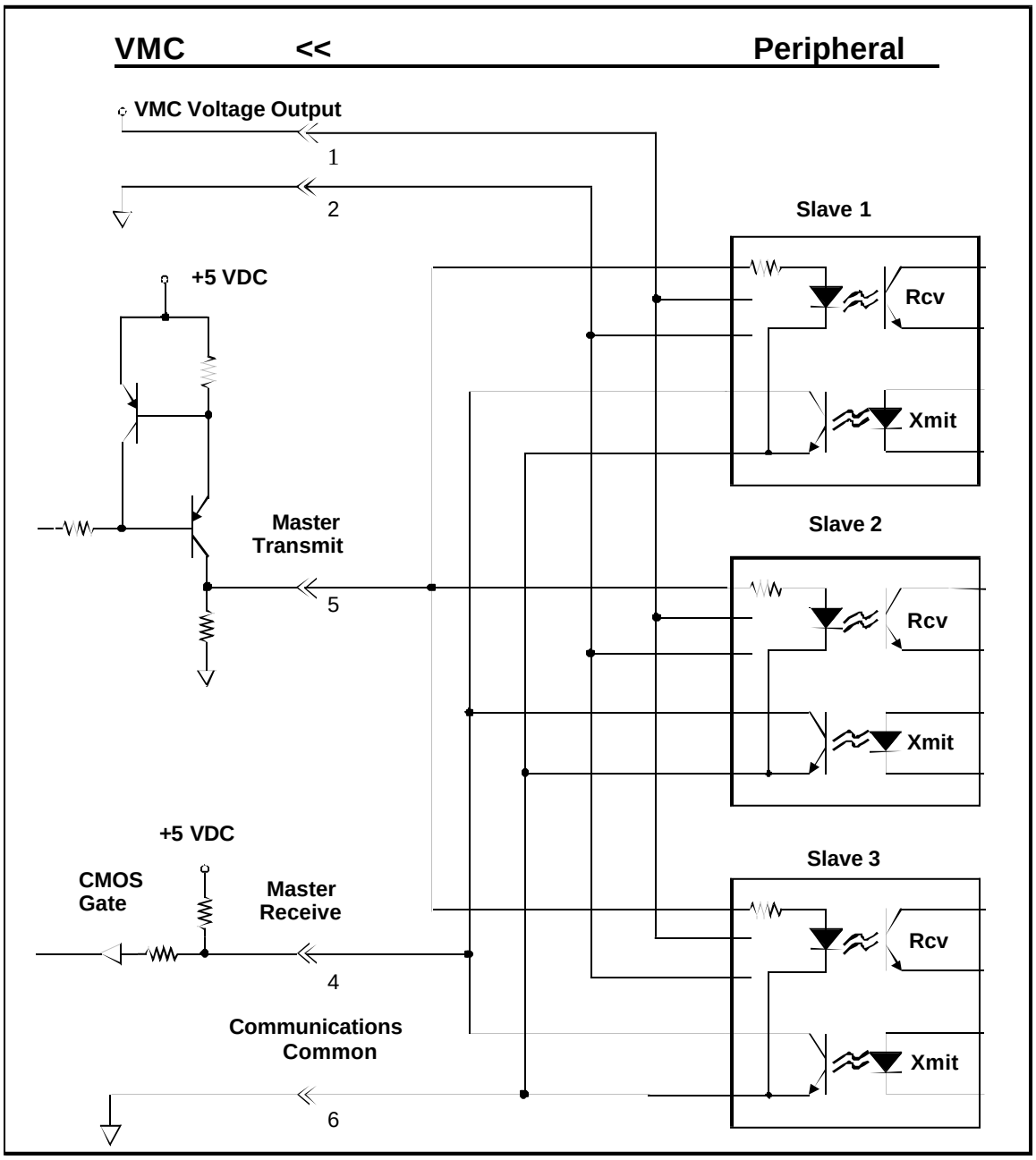

Section 5

Coin Acceptor/Changer
VMC/Peripheral Communication Specifications

5.1 Introduction

This section defines the communication bytes sent and received by a coin accepting device ("Changer"). As defined in Section 2.3, the changer's address is 00001xxxB (08H).

Unless stated otherwise, all information is assumed to be in a binary format.

There are currently two levels of support defined for the coin mechanism interface, Level 2 and Level 3. The level of coin mechanism operation is sent to the VMC in the response to the STATUS command (defined later in this section). The following paragraphs will define how a VMC should differentiate between each level.

Level 2 Changers

For level 2 changers, VMC operation consists of monitoring inputs from the coin mechanism, accumulating credit, issuing a coin acceptance disable command when appropriate, and issuing appropriate payout commands based on the VMC resident payout algorithms and escrow rules.

Level 3 Changers

For level 3 changers, VMC operation is the same as defined above for level 2, with the addition of the EXPANSION command and its implications (defined later in this section). The VMC has the option of sending the EXPANSION command to the coin mechanism to determine the coin mechanism's manufacturer code, serial number, model/tuning revision, software version, and optional features. Based on the optional feature information the VMC will determine the appropriate operating mode (in other words, modes that both the coin mechanism and the VMC can support), enable any appropriate coin mechanism features by sending an appropriate feature enable command back to the coin mechanism, and enter the proper operating mode. This technique allows all VMCs and peripherals to accommodate existing feature capabilities and provides a means for upgrading Level 3 equipment.

CSC ServiceWorks – Ex. 1008
Page 54 of 270

5.2 VMC Commands

Command	Hex Code	Description
RESET	08H	Command for changer to self-reset
SETUP *	09H	Request for changer setup information.
TUBE STATUS	0AH	Request for changer tube status.
POLL	0BH	Request for changer activity status.
COIN TYPE	0CH	Signifies coin types accepted and allowable coin dispensing. This command is followed by setup data. See command format section.
DISPENSE	0DH	Command to dispense a coin type. Followed by coin type to dispense. See command format section.
EXPANSION COMMAND	0FH	Command to allow addition of features and future enhancements. Changers at feature level 2 do not support this command.

NOTE: An EXPANSION command is always followed by a “sub-command.” This command allows for feature additions.

***** In Version 1.0 & 2.0, **SETUP** was called **STATUS.**

CSC ServiceWorks – Ex. 1008
Page 55 of 270

5.3 VMC Command Format

VMC Command	Code	VMC Data
RESET	08H	No data bytes

This command is the vehicle that the VMC should use to tell the changer that it should return to its default operating mode. With the exception of the ACK response, it should abort all communication and disable all acceptance until otherwise instructed by the VMC.

The following initialization sequence is recommended for all new VMCs designed after July, 2000. It should be used after "power up", after issuing the RESET command, or after issuing the Bus Reset (pulling the transmit line "active" for a minimum of 100 mS).

POLL – 0Bh
To obtain "JUST RESET" response

SETUP – 09h
To obtain changer level and configuration information

EXPANSION IDENTIFICATION – 0F 00h (Level 03+ only)
To obtain additional changer information and options

EXPANSION FEATURE ENABLE – 0F 01h (Level 03+ only)
To enable desired options

EXPANSION SEND DIAG STATUS – 0F 05h (Level 03+ & option b1 only)
To request the changer to report its current state of operation

TUBE STATUS – 0Ah (Note 1)
To obtain tube status / change information

COIN TYPE – 0Ch
To enable desired coin acceptance and disable manual coin payout if desired

Note 1 – A minimum 500 msec delay is required between a reset (regardless of type) and the first **TUBE STATUS** command for certain models of the existing MDB coin changer field base.

CSC ServiceWorks – Ex. 1008
Page 56 of 270

VMC Command	Code	Changer Response Data
SETUP	09H	23 bytes: Z1 - Z23

Z1 = Changer Feature Level - 1 byte

Indicates the feature level of the changer. This will distinguish the changers feature level to the VMC. Current defined levels:

Level 2: Supports "core" command set. These are: RESET, STATUS, TUBE STATUS, POLL, COIN TYPE, and DISPENSE. (Z1 = 02h)

Level 3: Supports level two and the EXPANSION command addition changer model number, manufacturer code, turning revision, etc. See the details of EXPANSION command later in this document. (Z1=03h)

Z2 - Z3 = Country / Currency Code - 2 bytes

The packed BCD country / currency code of the changer can be sent in two different forms depending on the value of the left most BCD digit.

If the left most digit is a 0, the International Telephone Code is used to indicate the country that the changer is set-up for. For example, the USA code is 00 01H (Z2 = 00 and Z3 = 01).

If the left most digit is a 1, the latest version of the ISO 4217 numeric currency code is used (see Appendix A1). For example, the code for the US dollar is 18 40H (Z2 = 18 and Z3 = 40) and for the Euro is 1978 (Z2 = 19 and Z3 = 78).

All new designs after July, 2000 must use the ISO 4217 numeric currency codes as listed in Appendix A1.

Z4 = Coin Scaling Factor - 1 byte

All accepted coin values must be evenly divisible by this number. For example, this could be set to 05H for the USA nickel.

Z5 = Decimal Places - 1 byte

Indicates the number of decimal places on a credit display. For example, this could be set to 02H in the USA.

CSC ServiceWorks – Ex. 1008
Page 58 of 270

Z6 - Z7 = Coin Type Routing - 2 bytes

Indicates what coin types can be routed to the Changer's tubes.

b15	b14	b13	b12	b11	b10	b9	b8	b7	b6	b5	b4	b3	b2	b1	b0
Z6															Z7

Bit is set to indicate a coin type can be routed to the tube. Valid coin types are 0 to 15.

Z8 - Z23 = Coin Type Credit - 16 bytes

Indicates the value of coin types 0 to 15. Values must be sent in ascending order. This number is the coin's monetary value divided by the coin scaling factor. Unused coin types are sent as 00H. Unsent coin types are assumed to be zero. It is not necessary to send all coin types. Coin type credits sent as FFH are assumed to be vend tokens. That is, their value is assumed to worth one vend.

The bytes position in the 16 byte string indicates the coin type(s). For example, the first byte sent would indicate the value of coin type 0, the second byte sent would indicate the value of coin type 1, and so on. For example, the USA coin types may be; Coin type 0 = nickel, Coin type 1 = dime, Coin type 2 = quarter, Coin type 3 = dollar.

VMC Command	**Code**	**Changer Response Data**
TUBE STATUS	0AH	18 bytes: Z1 - Z18

Z1 - Z2 = Tube Full Status - 2 bytes

Indicates status of coin tube for coin types 0 to 15.

b15	b14	b13	b12	b11	b10	b9	b8	b7	b6	b5	b4	b3	b2	b1	b0
Z1															Z2

A bit is set to indicate a full tube. For example, bit 7 = set would indicate the tube for coin type 7 is full.

Z3 - Z18 = Tube Status - 16 bytes

Indicates the greatest number of coins that the changer "knows" definitely are present in the coin tubes. A bytes position in the 16 byte string indicates the number of coins in a tube for a particular coin type. For example, the first byte sent indicates the number of coins in a tube for coin type 0. Unsent bytes are

CSC ServiceWorks – Ex. 1008
Page 59 of 270

assumed to be zero. For tube counts greater than 255, counts should remain at 255.

NOTE: If a changer can detect a tube jam, defective tube sensor, or other malfunction, it will indicate the tube is "bad" by sending a tube full status and a count of zero for the malfunctioning coin type.

VMC Command	Code	Changer Response Data
POLL	0BH	16 bytes: Z1 - Z16

Z1 - Z16 = Changer Activity - 16 bytes

Indicates the changer activity. If there is nothing to report, the changer should send only an ACK. Otherwise, the only valid responses are:

Coins Dispensed Manually:

Z1	Z2
(1yyyxxxx)	(zzzzzzzz)

yyy = The number of coins dispensed.
xxxx = The coin type dispensed (0 to 15)
zzzzzzzz = The number of coins in the tube.

Coins Deposited:

Z1	Z2
(01yyxxxx)	(zzzzzzzz)

yy = Coin routing. 00: CASH BOX
01: TUBES
10: NOT USED
11: REJECT

xxxx = Coin type deposited (0 to 15).

zzzzzzzz = The number of coins in the tube for the coin type accepted.

Status:

(00000001) = Escrow request[1] - An escrow lever activation has been detected.

(00000010) = Changer Payout Busy[2] - The changer is busy activating payout devices.

(00000011) = No Credit[1] - A coin was validated but did not get to the place in the system when credit is given.

CSC ServiceWorks – Ex. 1008
Page 60 of 270

(00000100) = Defective Tube Sensor[1] - The changer has detected one of the tube sensors behaving abnormally.

(00000101) = Double Arrival[1] - Two coins were detected too close together to validate either one.

(00000110) = Acceptor Unplugged[2] - The changer has detected that the acceptor has been removed.

(00000111) = Tube Jam[1] - A tube payout attempt has resulted in jammed condition.

(00001000) = ROM checksum error[1] - The changers internal checksum does not match the calculated checksum.

(00001001) = Coin Routing Error[1] - A coin has been validated, but did not follow the intended routing.

(00001010) = Changer Busy[2] - The changer is busy and can not answer a detailed command right now.

(00001011) = Changer was Reset[1] - The changer has detected an Reset condition and has returned to its power-on idle condition.

(00001100) = Coin Jam[1] - A coin(s) has jammed in the acceptance path.

(00001101) = Possible Credited Coin Removal[1] – There has been an attempt to remove a credited coin.

Note:

- changers must have a means to disable this code due to potential older VMC issues.
- virtually all VMCs designed prior to this code's introduction (10/16/02) will not support it.
- It is a vending machine system issue as to what is done when this code is received.

Slug:

(001xxxxx) = xxxxx is the number of slugs since the last activity.

NOTES: The Changer may send several of one type activity, up to 16 bytes total. This will permit zeroing counters such as slug, inventory, and status.

1 Sent once each occurrence.
2 Sent once each POLL

CSC ServiceWorks – Ex. 1008
Page 61 of 270

File Transport Layer POLLed responses:

Note that all FTL responses are defined in Section 2.6. For the coin changer, the source address will always be the changer (08H) as defined in Section 2.3.

Z1

1B	REQ TO RCV	The coin changer is requesting to receive data from a device or VMC. Z2 = Destination address of response Z3 = Source address of response (08H) Z4 = File ID Z5 = Maximum length Z6 = Control
1C	RETRY/DENY	The coin changer is requesting a device or VMC to retry or deny the last FTL command. Z2 = Destination address of response Z3 = Source address of response (08H) Z4 = Retry delay
1D	SEND BLOCK	The coin changer is sending a block of data (maximum of 31 bytes) to a device or VMC. Z2 = Destination address of data Z3 = Block # Z4-Z34 = Data (maximum of 31 bytes)
1E	OK TO SEND	The coin changer is indicating that it is OK for a device or VMC to send it data. Z2 = Destination address of response Z3 = Source address of response (08H)
1F	REQ TO SEND	The coin changer is requesting to send data to a device or VMC. Z2 = Destination address of response Z3 = Source address of response (08H) Z4 = File ID Z5 = Maximum length Z6 = Control

VMC Command	Code	VMC Data

CSC ServiceWorks – Ex. 1008
Page 62 of 270

COIN TYPE 0CH 4 bytes: Y1 - Y4

Y1 - Y2 = Coin Enable - 2 bytes

b15	b14	b13	b12	b11	b10	b9	b8	b7	b6	b5	b4	b3	b2	b1	b0
Y1															Y2

A bit is set to indicate a coin type is accepted. For example, bit 6 is set to indicate coin type 6, bit 15 is set to indicate coin type 15, and so on. To disable the changer, disable all coin types by sending a data block containing 0000H. All coins are automatically disabled upon reset.

Y3 - Y4 = Manual Dispense Enable - 2 bytes

b15	b14	b13	b12	b11	b10	b9	b8	b7	b6	b5	b4	b3	b2	b1	b0
Y3															Y4

A bit is set to indicate dispense enable. For example, bit 2 is set to enable dispensing of coin type 2. This command enables/disables manual dispensing using optional inventory switches. All manual dispensing switches are automatically enabled upon reset.

CSC ServiceWorks – Ex. 1008
Page 63 of 270

VMC Command	Code	VMC Data
DISPENSE	0DH	1 byte: Y1

b7	b6	b5	b4	b3	b2	b1	b0
							Y1

Bits b3, b2, b1, b0 indicate coin type to be dispensed. Valid codes are 0H to FH to indicate coin types 0 to 15.

Bits b7, b6, b5, b4 indicate the number of coins to be dispensed.

NOTE 1: If two coin types have the same value, the highest coin type should be paid out first.

NOTE 2: There is no defined limit on how long the actual dispense takes since the command allows for up to 15 coins to be paid out. The payout cycle begins when the changer ACKs the VMC's DISPENSE (0DH) command. This cycle typically lasts a minimum of 100 mS and ends when the changer stops dispensing the desired number of coins. VMCs should monitor the Changer Payout Busy response to the POLL command to determine when the entire payout cycle is completed.

However, it must be noted that other than ACKing the DISPENSE (0DH) command, the changer does not have to respond during the payout cycle provided the payout cycle is less than the changer's non-response time and the changer starts responding again prior to the end of the non-response time. Thus, it is acceptable for the changer to never report Changer Payout Busy, but simply start ACKing the POLL commands upon completion of a payout cycle provided the non-response time has not been exceeded.

CSC ServiceWorks – Ex. 1008
Page 64 of 270

LEVEL THREE CAPABILITIES - EXPANSION COMMAND

The following describes the currently defined expansion commands.

Sub-command 00H is used for a changer that has the capability of reporting model number, serial number, and so on.

VMC Command	Code	Sub-Command	Changer Response Data
EXPANSION COMMAND	0FH	00H IDENTIFICATION	33 bytes: Z1 - Z33

Z1 - Z3 = Manufacturer Code - 3 bytes
Identification code for the equipment supplier. Sent as ASCII characters. Currently defined codes are listed in the **EVA** document entitled "***European Vending Association Data Transfer Standard***" (**EVA-DTS**), the Audit Data Lists section, sub-section 2, "Manufacturer Codes".

Z4 - Z15 = Serial Number - 12 bytes

Factory assigned serial number. All bytes must be sent as ASCII characters, zeros (30H) and blanks (20H) are acceptable.

Z16 - Z27 = Model #/Tuning Revision - 12 bytes

Manufacturer assigned model number and tuning number. All bytes must be sent as ASCII characters, zeros (30H) and blanks (20H) are acceptable. Each manufacturer should include information concerning the changer tuning revision.

Z28 - Z29 = Software Version - 2 bytes

Current software version. Must be sent in packed BCD.

Z30 - Z33 = Optional Features - 4 bytes

Each of the 32 bits indicate an optional features availability. If the bit is set the feature is available. Bits should be sent in descending order, i.e. bit 31 is sent first and bit 0 is sent last. Currently defined options are:

b0 - Alternative Payout method. This method allows changer designs that determine change payout. That is, the payout algorithm may reside in the changer instead of the VMC.

CSC ServiceWorks – Ex. 1008
Page 65 of 270

b1 - Extended Diagnostic command supported. This command allows the VMC to request diagnostic status of the coin changer.

b2 - Controlled Manual Fill and Payout commands supported. These commands allows the VMC to request the number of coin inserted or dispensed while the changer was in a controlled manual fill or payback mode.

b3 - File Transport Layer (FTL) supported as defined in Section 2.6.

b4 - b31 Available for future use

VMC Command	Code	Sub-Command	VMC Data
EXPANSION COMMAND	0FH FEATURE ENABLE	01H	4 bytes: Y1 - Y4

This command is used to enable each of the optional features defined in Z30-Z33 above. To enable a feature a bit is set to one. **All optional features are disabled after reset.**

VMC Command	Code	Sub-command	VMC Data	Changer Response
EXPANSION COMMAND (Alternative Payout)	0FH PAYOUT	02H	Y1	None

Y1 = Value of coins to be paid out - 1 byte

This value is expressed as the number of coin scaling factors that would sum to the value. For example, in a USA system using a scaling factor of 05, if the change to be paid out is 75 cents, then Y1 will equal fifteen. That is, the sum of fifteen nickels equal 75 cents. The coin changer will determine which actual denominations of coins will be paid out. In the 75 cent example, the coins may be 3 quarters; or, 7 dimes & 1 nickel; or, 2 quarters & 2 dimes & 1 nickel, etc.

CSC ServiceWorks – Ex. 1008
Page 66 of 270

VMC Command	Code	Sub-command	VMC Data	Changer Response
EXPANSION COMMAND (Alternative Payout)	0FH	03H PAYOUT STATUS	None	16 bytes: Z1-Z16

Z1 - Z16 = Number of each coin type paid out - 16 bytes

This is the changer's response to the last VMC Alternative PAYOUT command (0FH-02H). Bytes are sent in ascending order of coin types. A bytes position in the string indicates the coin type. That is, byte one is the number of coins for coin type 1, byte two is the number of coins for coin type two, and so on. Unsent bytes are assumed to be zero.

The changer clears payout data after an ACK response from the VMC.

The VMC should compare the value of the coins paid out to the (0FH-02H) Alternative PAYOUT command's Y1 .

NOTES:

1) If the changer's payout is busy it will respond to the Alternative PAYOUT STATUS command with an ACK only.

2) If no coins have been paid out, at least one zero valued data byte must be sent.

3) There is no defined limit on how long the actual payout takes. See Note 2 under the DISPENSE (0DH) command.

VMC Command	Code	Sub-command	Changer Response Data
EXPANSION COMMAND (Alternative Payout)	0FH	04H PAYOUT VALUE POLL	1 byte: Z1

Z1 = Changer Payout Activity - 1 byte

An interval value (scaled) which indicates the amount of paid out change since the previous PAYOUT VALUE POLL (or between the initial Alternative PAYOUT command (0FH-02H) and the first PAYOUT VALUE POLL).

CSC ServiceWorks – Ex. 1008
Page 67 of 270

An 00H response indicates no coins were paid out since the previous PAYOUT VALUE POLL (or the initial Alternative PAYOUT command (0FH-02H)).

An ACK only indicates that the change payout is finished. This should be followed by the PAYOUT STATUS command (0FH-03H) to obtain the complete payout data.

NOTE: The initial intent of this command is to determine the amount of change paid out so that the credit display can be decremented as coins are dispensed.

VMC Command	Code	Sub-Command	Changer Response Data
EXPANSION COMMAND	**0FH**	**05H**	**16 bytes: Z1-Z16**
	SEND DIAGNOSTIC STATUS		

Send Current Diagnostic Status - This command requests the changer to report its current state of operation. The VMC should periodically transmit the command approximately every 1 to 10 seconds.

.

Z1-Z2 **= Current changer diagnostic information**

The changer reports its current state of operation in a 2 byte code. Z1 is the main code and Z2 is the sub-code. The code is reported as long as the condition exists and stops being reported as soon as the condition does not exist. Multiple 2 byte codes may be sent in response to a single command which could result in a maximum of eight 2 byte codes (16 bytes total).

The following tables identify the currently defined extended diagnostic codes:

CSC ServiceWorks – Ex. 1008
Page 68 of 270

Z1 / Z2	Status	Cause(s) of Status / Error
01 / 00	Powering up	Changer powering up / initialization
02 / 00	Powering down	Changer powering down
03 / 00	OK	Changer fully operational and ready to accept coins
04 / 00	Keypad shifted	MODE key pressed and held so that LED flashes indicating keypad in shifted state. Reverts to normal mode if no key pressed for 15 seconds
05 / 10	Manual Fill / Payout active	Manual Fill or Manual Payout mode of operation in progress (under control of the changer). This response must be reported at least once to allow the VMC to request a manual fill or manual payout report.
05 / 20	New Inventory Information Available	Changer not in Manual inventory mode, but new inventory information available.
06 / 00	Inhibited by VMC	All coin acceptance inhibited at request of VMC, possibly due to product dispenser jams, completely sold out, etc.
10 / Z2	General changer error	Z2 defined as: **00** Non specific error. **01** Check sum error #1. A check sum error over a particular data range of configuration field detected. **02** Check sum error #2. A check sum error over a secondary data range or configuration field detected. **03** Low line voltage detected. The changer has disabled acceptance or payout due to a low voltage condition.

Z1 / Z2	Status	Cause(s) of Status / Error
11 / Z2	Discriminator module error	Z2 defined as: **00** Non specific discriminator error. **10** Flight deck open. **11** Escrow Return stuck open. **30** Coin jam in sensor. **41** Discrimination below specified standard. **50** Validation sensor A out of range. The acceptor detects a problem with sensor A. **51** Validation sensor B out of range. The acceptor detects a problem with sensor B. **52** Validation sensor C out of range. The acceptor detects a problem with sensor C. **53** Operating temperature exceeded. The acceptor detects the ambient temperature has exceeded the changer's operating range, thus possibly affecting the acceptance rate. **54** Sizing optics failure. The acceptor detects an error in the sizing optics.
12 / Z2	Accept gate module error	Z2 defined as: **00** Non specific accept gate error. **30** Coins entered gate, but did not exit. **31** Accept gate alarm active. **40** Accept gate open, but no coin detected. **50** Post gate sensor covered before gate opened.
13 / Z2	Separator module error	Z2 defined as: **00** Non specific separator error **10** Sort sensor error. The acceptor detects an error in the sorting sensor.
14 / Z2	Dispenser module error	Z2 defined as: **00** Non specific dispenser error.
15 / Z2	Coin Cassette / tube module error	Z2 defined as: **00** Non specific cassette error. **02** Cassette removed. **03** Cash box sensor error. The changer detects an error in a cash box sensor. **04** Sunlight on tube sensors. The changer detects too much ambient light on one or more of the tube sensors.

CSC ServiceWorks – Ex. 1008
Page 70 of 270

Diagnostic Status EVA-DTS Correlation

The Extended Diagnostic information reported may be used by the vending machine controller as desired (i.e., service mode displays); however, EVA-DTS **data elements could also be used for reporting to a host system. Examples are:**

- **Via a translation of the Z1/Z2 code to one of the** Fault Lists **as described in Section 10 of the** EVA-DTS**.**

- **Via the EA201 Event Identification element with the format** EAxxyy **where xx = Z1 and yy = Z2.**

- **Via a customer / manufacture specific coding scheme using the** MA5xx **fields.**

VMC Command	Code	Sub-Command	Changer Response Data
EXPANSION COMMAND	**0FH**	**06H**	**16 bytes Z1-Z16**
	SEND CONTROLLED MANUAL FILL REPORT		

Send Controlled Manual Fill Report **- This command requests the changer to report the number of coins inserted during a changer controlled manual fill (controlled bulk fill) mode. While in this mode, the changer must not report coins inserted in response to the** POLL **command.**

Z1-Z16 **= number of controlled manual mode filled coins (by coin type)**

A single byte is reported for each coin type, 0 to 15. For example, Z1 = number of coins of coin type 0 added in a controlled manual fill mode. Any amount above 255 will be reported as 255, i.e. it will reach a maximum limit.

Only coin types *supported* are required to be reported. Counts for unsent coins types will be assumed to be unchanged.

Notes: **After power on, changer reset, closing of the machine door, or a change in controlled manual fill status in the changer (changer indicated it was in controlled manual fill mode via CM0510 then changed to any other state) the machine should request the controlled manual coin fill data from the changer using the above command.**

See EVA-DTS correlation at end of SEND CONTROLLED MANUAL PAYOUT REPORT **(0F-07H) command.**

CSC ServiceWorks – Ex. 1008
Page 71 of 270

VMC Command	Code	Sub-Command	Changer Response Data
EXPANSION	**0FH**	**07H**	**16 bytes Z1-Z16**
COMMAND	**SEND CONTROLLED MANUAL PAYOUT REPORT**		

Send Controlled Manual Payout Report **- This command requests the changer to report the number of coins dispensed during a changer controlled manual payout (controlled bulk dispense) mode. Note that this does not include the coins dispensed via the individual dispense switches.**

If the new Controlled Manual Fill / Payout command is implemented in the coin mech and **enabled by the VMC (0Fh, 01h, bit 2 of Y1 to Y4), while in a controlled manual payout (dispense) mode, the changer** must not **report the coins paid out in response to the** POLL **command. Conversely, if the changer does not support the new command or the VMC does not enable it, the changer** should **report the coins paid out in response to the** POLL **command.**

Z1-Z16 **= number of controlled manual mode dispensed coins (by coin type)**

> **A single byte is reported for each coin type 0 to 15. For example, Z1 = number of coins of coin type 0 dispensed in a controlled manual payout mode. Any amount above 255 will be reported as 255, i.e. it will reach a maximum limit.**
>
> **Only coin types supported are required to be reported. Counts for unsent coin types will be assumed to be unchanged.**

Note: **After power on, changer reset, closing of the machine door, or a change in controlled manual payout status in the changer (changer indicated it was in controlled manual payout mode via CM0510 then changed to any other state) the machine should request the controlled manual coin payout data from the changer using the above command.**

Controlled Manual Fill / Payout EVA-DTS Correlation

The controlled manual fill and payout coin information may be used by the vending machine controller as desired (i.e., service mode displays); however, EVA-DTS **data elements could be used for reporting to a host system. Examples are:**

	CA3XX	CA4XX	CA1704	CA1705
Controlled Manual Fill	0F06	n/a	0F06	n/a
VMC Tube Fill	VMC	n/a	VMC	n/a
Controlled Manual Payout	n/a	0F07*	n/a	0F07*
VMC Coin Payout	n/a	VMC	n/a	VMC
Manual Dispense Switches	n/a	0B	n/a	0B

***If extended** 0F06 **&** 0F07 **commands are implemented.**
If extended 0F06 **&** 0F07 **commands are not implemented in the coin mech or not enabled by the VMC, the coin mech will respond to the** POLL **command with the controlled manual payout coins.**

With the above, the CA3XX **&** CA4XX **fields can continue to be the primary fields for cash audit and the** CA1704 **&** CA1705 **fields can be used for indicating controlled manually filled / dispensed coins.**

Coin Tube Audit Fields

As a reference, below are the agreed CA17XX **data elements that provide detailed coin tube count information and controlled-manual coin tube insertion / dispense information. These were approved by the** EVA - DTS **Technical Sub Committee on January 27, 1997.**

Block Identifier Reference	Data Contents	Charac-teristic	Length Min	Max	Element
CA17	Coin Type Number (per MDB coin type)	N	01	03	CA1701
	Value of Coin	N	01	08	CA1702
	Number of Coins in Tube	N	01	08	CA1703
	Number of Coins Inserted during Controlled-Manual Fill	N	01	08	CA1704
	Number of Coins Dispensed during Controlled-Manual Payout	N	01	08	CA1705

Definitions:

CA1701 **The coin type number as referred to in the MDB Interface Specification. If not an MDB system, the number represents the coin's position in the coin set starting with the lowest value coin accepted. Note if two or more vintage of the same coin is accepted, the oldest one is first.**

For example, the Canadian coin types may be:

0 Old Nickel	**3 Quarter**
1 New Nickel	**4 $1 Dollar**
2 Dime	**5 $2 Dollar**

CA1702 **The cash value of the coin (units base).**

For example, the Canadian coin types would be:

Nickel	**5**	**$1 Dollar**	**100**
Dime	**10**	**$2 Dollar**	**200**
Quarter	**25**		

CA1703 **The number of coins in the coin tube (or tubes if multiple tubes per coin) that are reported by the coin mech during normal vending operations. Note that this is the "best known tube count" and may be inaccurate if coins were manually added or removed by hand.**

CA1704 **The number of coins inserted while the changer was in a Controlled manual fill mode. Controlled manual fill indicates that the coins are being inserted under the control of the coin mech or VMC. Coins are not being loaded by hand through the tops of the tubes.**

CA1705 **The number of coins dispensed while the changer was in a controlled manual payout mode. Controlled manual payout indicates that the coins are being dispensed under the control of the coin mech or VMC. Coins are not being removed by hand by "dumping" the tubes.**

CSC ServiceWorks – Ex. 1008
Page 74 of 270

VMC Command	Code	Sub-command	VMC Data	Changer Response
EXPANSION COMMAND	0FH **FTL**	FAH REQ TO RCV	Y1-Y5	Z1 - Zn (immediate or POLLed)

The VMC is requesting to receive data from the changer whose destination address will always be (08H). Note that all FTL Commands / Responses are defined in Section 2.6.

Y1 = Destination address of command (08H)
Y2 = Source address of command
Y3 = File ID
Y4 = Maximum length
Y5 = Control

Z1 = 1DH which indicates SEND BLOCK
Z2 = Destination address of data
Z3 = Block #
Z4 - Z34 = Data (maximum of 31 bytes)

or

Z1 = 1CH which indicates RETRY / DENY
Z2 = Destination address of response
Z3 = Source address of response (08H)
Z4 = Retry delay

VMC Command	Code	Sub-command	VMC Data	Changer Response
EXPANSION COMMAND	0FH **FTL**	FBH RETRY / DENY	Y1-Y3	None

The VMC is retrying, denying, or aborting a data transfer to/from the changer whose destination address will always be (08H). Note that all FTL Commands / Responses are defined in Section 2.6.

Y1 = Destination address of command (08H)
Y2 = Source address of command
Y3 = Retry delay

VMC Command	Code	Sub-command	VMC Data	Changer Response
EXPANSION COMMAND	0FH	FCH **FTL** SEND BLOCK	Y1-Y33	None

The VMC is sending data to the changer whose destination address will always be (08H). Note that all FTL Commands / Responses are defined in Section 2.6.

Y1 = Destination address of command & data (08H)
Y2 = Block #
Y3 - Y33 = Data (maximum of 31 bytes)

VMC Command	Code	Sub-command	VMC Data	Changer Response
EXPANSION COMMAND	0FH	FDH **FTL** OK TO SEND	Y1-Y2	Z1-Z34 (immediate or POLLed)

The VMC is indicating that it is OK for the changer to transfer data. The destination address will always be the changer (08H). Note that all FTL Commands / Responses are defined in Section 2.6.

Y1 = Destination address of command (08H)
Y2 = Source address of command

Z1 = 1DH which indicates SEND BLOCK
Z2 = Destination address of data
Z3 = Source address of data
Z4 - Z34 = Data (maximum of 31 bytes)

CSC ServiceWorks – Ex. 1008
Page 76 of 270

VMC Command	Code	Sub-command	VMC Data	Changer Response
EXPANSION COMMAND	0FH	FEH **FTL** REQ TO SEND	Y1-Y5	Z1 (immediate or POLLed)

The VMC is requesting to send data to the changer whose destination address will always be (08H). Note that all FTL Commands / Responses are defined in Section 2.6.

Y1 = Destination address of command (08H)
Y2 = Source address of command
Y3 = File ID
Y4 = Maximum length
Y5 = Control

Z1 = 1EH which indicates OK TO SEND
Z2 = Destination address of response
Z3 = Source address of response (08H)

or

Z1 = 1CH which indicates RETRY / DENY
Z2 = Destination address of response
Z3 = Source address of response (08H)
Z4 = Retry delay

VMC Command	Code	Sub-command	VMC Data	Changer Response
EXPANSION COMMAND	0FH	FFH DIAGNOSTICS	Y1-Yn	Z1-Zn

Y1 - Yn = Device manufacturer specific instruction for implementing various manufacturing or test modes. Y1 - Yn implies that any number of bytes can be used for the VMC data to the peripheral.

Z1 - Zn = Device manufacturer specific responses after receiving manufacturing or test instructions. Z1 - Zn implies that any number of bytes can be used for the changer response data from the peripheral.

CSC ServiceWorks – Ex. 1008
Page 77 of 270

5.4 Changer Non-Response Time

The maximum non-response time for the changer is two seconds.

5.5 Changer Power Requirements

The current draw for any changer must fall within the following limits. All measurements are at the minimum VMC Voltage Output.

Idle mode = 200 mA. (max.) continuous

Coin acceptance = 1.8 A. (max.) for up to 2 seconds

(For coin changers using solenoid based payout mechanisms - typical of 3 tube changers sold in the US market. Vending machines sold into the US market are required to supply this power.)

1.0 A. (max.) for up to 2 seconds

(For coin changers using motorized payout mechanisms - typical of 4 tube changers.)

Coin payout = 3.6 A. (max.) for 100 mS. with 400 mS. idle current between pulses during the coin payout cycle.

(For coin changers using solenoid based payout mechanisms - typical of 3 tube changers sold in the US market. Vending machines sold into the US market are required to supply this power.)

1.8 A. (max.) during the coin payout cycle.

(For coin changers using motorized payout mechanisms - typical of 4 tube changers.

See Note 2 under the DISPENSE (0DH) command for further information on the coin payout cycles.)

Note: If both peripherals are supported, vending machines should be able to provide sufficient power to simultaneously supply the above power requirements for both the coin changer **Coin Acceptance** and bill validator **Bill Transport** as specified in Section 6.5.

CSC ServiceWorks – Ex. 1008
Page 78 of 270

Section 6

Bill Validator
VMC/Peripheral Communication Specifications

6.1 Introduction

This section defines the communication bytes sent and received between a Bill Validator and the VMC. As defined in Section 2.3, the bill validator's address is 00110xxxB (30H).

Unless stated otherwise, all information is assumed to be in a binary format.

There are currently two levels of support defined for the bill validator interface, Level 1 and Level 2. The level of bill validator operation is sent to the VMC in the response to the STATUS command (defined later in this section). The following paragraphs will define how a VMC should differentiate between each level.

Level 1 Bill Validators

Level 1 bill validators support all standard functions, but do not support any optional features.

Level 2 Bill Validators

Level 2 bill validators support all standard functions plus various optional features as defined in Section 6.3 under the Expansion command 37-02H. Based on the optional feature information the VMC will determine the appropriate operating mode (in other words, modes that both the bill validator and the VMC can support), enable any appropriate features by sending an appropriate feature enable command back to the bill validator, and enter the proper operating mode. This technique allows all VMCs and peripherals to accommodate existing feature capabilities and provides a means for upgrading Level 2 equipment.

CSC ServiceWorks – Ex. 1008
Page 79 of 270

6.2 VMC Commands

.

Command	Hex Code	Description
RESET	30H	Command for bill validator to self-reset.
SETUP *	31H	Request for bill validator setup information.
SECURITY	32H	Sets Validator Security Mode
POLL	33H	Request for Bill Validator activity Status.
BILL TYPE	34H	Indicates Bill Type enable or disable. Command is followed by set-up data. See command format.
ESCROW	35H	Sent by VMC to indicate action for a bill in escrow.
STACKER	36H	Indicates stacker full and the number of bills.
EXPANSION COMMAND	37H	Command to allow addition of features and future enhancements. Level 1 and above bill validators must support this command.

NOTE: The expansion command is always followed by a sub-command.

***** In Version 1.0 & 2.0, **SETUP** was called **STATUS.**

CSC ServiceWorks – Ex. 1008
Page 80 of 270

6.3 VMC Command Format

VMC Command	Code	VMC Data
RESET	30H	No data bytes

This command is the vehicle that the VMC should use to tell the validator that it should return to its default operating mode. It should reject any bills in the validation process, return any bills in the escrow position, and disable all other activity until otherwise instructed by the VMC.

The following initialization sequence is recommended for all new VMCs designed after July, 2000. It should be used after "power up", after issuing the RESET command, or after issuing the Bus Reset (pulling the transmit line "active" for a minimum of 100 mS).

POLL – 33h
To obtain "JUST RESET" response

SETUP – 31h
To obtain bill validator level and configuration information

EXPANSION IDENTIFICATION – 37 00h (Level 01+)
To obtain additional bill validator information

EXPANSION IDENTIFICATION w/ OPTION BITS – 37 02h (Level 02+ only)
To obtain additional bill validator information and options

EXPANSION FEATURE ENABLE – 37 01h (Level 02+ only)
To enable desired options

STACKER – 36h
To obtain stacker status and number of bills

BILL TYPE – 34h
To enable desired bill acceptance and desired bill escrow capability

CSC ServiceWorks – Ex. 1008
Page 81 of 270

VMC Command	Code	Validator Response Data
SETUP	31H	27 bytes: Z1 - Z27

Z1 = Bill Validator Feature Level - 1 byte

Indicates current feature level of the bill validator. Currently defined levels are:

Level **1** - does not support option bits (Z1 = 01h)
Level **2** - supports option bits (Z1 = 02h)

Z2 - Z3 = Country / Currency Code - 2 bytes

The packed BCD country / currency code of the bill validator can be sent in two different forms depending on the value of the left most BCD digit.

If the left most digit is a 0, the International Telephone Code is used to indicate the country that the validator is set-up for. For example, the USA code is 00 01H (Z2 = 00 and Z3 = 01).

If the left most digit is a 1, the latest version of the ISO 4217 numeric currency code is used (see Appendix A1). For example, the code for the US dollar is 18 40H (Z2 = 18 and Z3 = 40) and for the Euro is 1978 (Z2 = 19 and Z3 = 78).

All new designs after July, 2000 must use the ISO 4217 numeric currency codes as listed in Appendix A1.

Z4 - Z5 = Bill Scaling Factor - 2 bytes

All accepted bill values must be evenly divisible by this number. For example, this could be set to 0064H for the USA.

Z6 = Decimal Places - 1 byte

Indicates the number of decimal places on a credit display. For example, this could be set to 02H for the USA.

Z7 - Z8 = Stacker Capacity - 2 bytes

Indicates the number of bills that the stacker will hold. For example, 400 bill capacity = 0190H.

CSC ServiceWorks – Ex. 1008
Page 82 of 270

Z9 - Z10 = Bill Security Levels - 2 bytes
Indicates the security level for bill types 0 to 15. Since not all validators support multiple security levels, validators that do not have this feature must report a “high” security level.

Z11 = Escrow/No Escrow - 1 byte
Indicates the escrow capability of the bill validator. If Z11 = 00H, the bill validator does not have escrow capability. If Z11 = FFH, the bill
validator has escrow capability.

Z12 - Z27 = Bill Type Credit - 16 bytes
Indicates the value of the bill types 0 to 15. Values must be sent in ascending order. This number is the bill's monetary value divided by the bill scaling factor. Unused bill types are sent as 00H. Unsent bill types are assumed to be zero. FFH bills are assumed to be vend tokens.

VMC Command	Code	VMC Data
SECURITY	32H	2 Bytes: Y1 - Y2

Y1 - Y2 = Bill Type(s) - 2 bytes

b15	b14	b13	b12	b11	b10	b9	b8	b7	b6	b5	b4	b3	b2	b1	b0
Y1															Y2

A bit is set to indicate the type of bill(s) which are set to a “high” security level. Note that validators that do not support dual security levels should report a “high” security level in the response bytes Z9-Z10 to the STATUS (31H) command.

VMC Command	Code	Validator Response Data
POLL	33H	16 bytes: Z1 - Z16

Z1 - Z16 = Bill Validator Activity - 16 bytes

Indicates the validator activity, for example, the type and number of bills accepted, and stacker position. If there is nothing to report, the validator should send only an ACK. Otherwise, the only valid responses are:

Bills Accepted:

Indicates the type and number of bills accepted and stacker status.

Z1	
(1yyyxxxx)	**NOTE:** These responses should be used to add or subtract credit.

yyy	=	Bill Routing;	000: BILL STACKED 001: ESCROW POSITION 010: BILL RETURNED 011: NOT USED 100: DISABLED BILL REJECTED
xxxx	=	Bill Type (0 to 15)	

Status:

(00000001) = Defective Motor[3] - One of the motors has failed to perform its expected assignment.

(00000010) = Sensor Problem[3] - One of the sensors has failed to provide its response.

(00000011) = Validator Busy[2] - The validator is busy and can not answer a detailed command right now.

(00000100) = ROM Checksum Error[3] - The validators internal checksum does not match the calculated checksum.

(00000101) = Validator Jammed[3] - A bill(s) has jammed in the acceptance path.

(00000110) = Validator was reset[1] - The validator has been reset since the last POLL.

(00000111) = Bill Removed[1] - A bill in the escrow position has been removed by an unknown means. A BILL RETURNED message should also be sent.

(00001000) = Cash Box out of position[3] - The validator has detected the cash box to be open or removed.

(00001001) = Unit Disabled[2] - The validator has been disabled, by the VMC or because of internal conditions.

(00001010) = Invalid Escrow request[1] - An ESCROW command was requested for a bill not in the escrow position.

(00001011) = Bill Rejected[1] - A bill was detected, but rejected because it could not be identified.

(00001100) = Possible Credited Bill Removal[1] – There has been an attempt to remove a credited (stacked) bill.

Note:

- validators must have a means to disable this code due to potential older VMC issues.
- virtually all VMCs designed prior to this code's introduction (10/16/02) will not support it.
- It is a vending machine system issue as to what is done when this code is received.

(010xxxxx) = Number of attempts to input a bill while validator is disabled.[1]

NOTE: The validator may send several of one type activity up to 16 bytes total.

1 Sent once each occurrence.
2 Sent once each POLL
3 Sent once each occurrence. The unit is then disabled until the condition is removed. Validator will respond with unit disabled until repaired or replaced.

CSC ServiceWorks – Ex. 1008
Page 85 of 270

File Transport Layer POLLed responses:

Note that all FTL responses are defined in Section 2.6. For the bill validator, the source address will always be the validator (30H) as defined in Section 2.3.

Z1

1B	REQ TO RCV	The bill validator is requesting to receive data from a device or VMC. Z2 = Destination address of response Z3 = Source address of response (30H) Z4 = File ID Z5 = Maximum length Z6 = Control
1C	RETRY/DENY	The bill validator is requesting a device or VMC to retry or deny the last FTL command. Z2 = Destination address of response Z3 = Source address of response (30H) Z4 = Retry delay
1D	SEND BLOCK	The bill validator is sending a block of data (maximum of 31 bytes) to a device or VMC. Z2 = Destination address of data Z3 = Block # Z4-Z34 = Data (maximum of 31 bytes)
1E	OK TO SEND	The bill validator is indicating that it is OK for the device or VMC to send it data. Z2 = Destination address of response Z3 = Source address of response (30H)
1F	REQ TO SEND	The bill validator is requesting to send data to a device or VMC. Z2 = Destination address of response Z3 = Source address of response (30H) Z4 = File ID Z5 = Maximum length Z6 = Control

CSC ServiceWorks – Ex. 1008
Page 86 of 270

VMC Command	Code	VMC Data
BILL TYPE	34H	4 bytes: Y1 - Y4

Y1 - Y2 = Bill Enable - 2 bytes

Indicates what type of bills are accepted.

b15	b14	b13	b12	b11	b10	b9	b8	b7	b6	b5	b4	b3	b2	b1	b0
Y1															Y2

Bill types are 0 to 15. A bit is set to indicate acceptance of bill type.

NOTE: Sending 0000H disables the bill validator.

Y3 - Y4 = Bill Escrow Enable:

b15	b14	b13	b12	b11	b10	b9	b8	b7	b6	b5	b4	b3	b2	b1	b0
Y3															Y4

Bill types are 0 to 15. A bit is set to indicate enable of escrow for a bill type.

NOTE: On power-up or reset all bill acceptance and escrow are disabled.

VMC Command	Code	VMC Data
ESCROW	35H	1 byte: Y1

Y1 = Escrow status - 1 byte

If Y1 = 0;	Return bill in the escrow position.
If Y1 = xxxxxxx1;	Stack the bill (“x” indicates don’t care)

NOTE: After an ESCROW command the bill validator should respond to a POLL command with the BILL STACKED, BILL RETURNED, or INVALID ESCROW message within 30 seconds. If a bill becomes jammed in a position where the customer may be able to retrieve it, the bill validator should send a BILL RETURNED message.

CSC ServiceWorks – Ex. 1008
Page 87 of 270

VMC Command	Code	Validator Response Data
STACKER	36H	2 bytes: Z1 - Z2

Indicates stacker full condition and the number of bills in the stacker.

Z1 Z2

(Fxxxxxxx) (xxxxxxxx)
F = 1 if stacker is full, 0 if not.

xxxxxxxxxxxxxxx = The number of bills in the stacker.

LEVEL ONE and TWO+ CAPABILITIES - EXPANSION COMMAND

In order to allow existing VMCs to operate with original Level 1 or new Level 2 bill validators, a separate identification sub-command has been introduced to handle the additional 4 bytes of Option Bit information.

The original sub-command 00H is used for obtaining Z1 to Z29 identification information from bill validators. This information includes the model number, serial number, software version, etc, but **not the option bits**. Note that if a Level 2+ bill validator is sent the 00H sub-command, it must **not** report the Z30 to Z33 option bytes.

Sub-command 01H is used for Level 2+ bill validators to enable option bits reported in the expansion command 02H sub-command below.

The new sub-command 02H is used for obtaining Z1 to Z33 identification information from Level 2+ bill validators. This information includes the model number, serial number, software version, etc, and the **option bits (Z30-Z33).**

VMC Command	Code	Sub-Command	Validator Response Data
EXPANSION COMMAND	37H	00H	29 bytes: Z1 - Z29
	LEVEL 1 IDENTIFICATION WITHOUT OPTION BITS		

Z1 - Z3 = Manufacturer Code - 3 bytes
Identification code for the equipment supplier. Sent as ASCII characters. Currently defined codes are listed in the **EVA** document entitled " ***European Vending Association Data Transfer Standard***' (**EVA-DTS**), the Audit Data Lists section, sub-section 2, "Manufacturer Codes".

Z4 - Z15 = Serial Number - 12 bytes
Factory assigned serial number. All bytes must be sent as ASCII characters, zeros (30H) and blanks (20H) are acceptable.

Z16 - Z27 = Model #/Tuning Revision - 12 bytes
Manufacturer assigned model number. All bytes must be sent as ASCII characters, zeros (30H) and blanks (20H) are acceptable.

Z28 - Z29 = Software Version - 2 bytes
Current software version. Must be sent in packed BCD.

VMC Command	Code	Sub-Command	VMC Data
EXPANSION COMMAND	37H	01H	4 bytes: Y1 - Y4
	LEVEL 2+ FEATURE ENABLE		

This command is used to enable each of the Level 2+ optional features defined in the Level 2+ Identification response bytes Z30-Z33 below. To enable a feature a bit is set to one. **All optional features are disabled after reset.**

VMC Command	Code	Sub-Command	Validator Response Data
EXPANSION COMMAND	37H	02H	33 bytes: Z1 – Z33
	LEVEL 2+ IDENTIFICATION WITH OPTION BITS		

Z1 - Z3 = Manufacturer Code - 3 bytes
Identification code for the equipment supplier. Sent as ASCII characters. Currently defined codes are listed in the **EVA** document entitled " ***European Vending Association Data Transfer Standard***" (**EVA-DTS**), the Audit Data Lists section, sub-section 2, "Manufacturer Codes".

Z4 - Z15 = Serial Number - 12 bytes
Factory assigned serial number. All bytes must be sent as ASCII characters, zeros (30H) and blanks (20H) are acceptable.

Z16 - Z27 = Model #/Tuning Revision - 12 bytes
Manufacturer assigned model number. All bytes must be sent as ASCII characters, zeros (30H) and blanks (20H) are acceptable.

Z28 - Z29 = Software Version - 2 bytes
Current software version. Must be sent in packed BCD.

Z30 - Z33 = Optional Features - 4 bytes
Each of the 32 bits indicate an optional features availability. If the bit is set the feature is available. Bits should be sent in descending

CSC ServiceWorks – Ex. 1008
Page 89 of 270

order, i.e. bit 31 is sent first and bit 0 is sent last. Currently defined options are:

b0 - File Transport Layer (FTL) supported as defined in Section 2.6.
b1 - b31 Available for future use

VMC Command	Code	Sub-command	VMC Data	Validator Response
EXPANSION COMMAND	37H	FAH **FTL** REQ TO RCV	Y1-Y5	Z1 (immediate or POLLed)

The VMC is requesting to receive data from the bill validator whose destination address will always be (30H). Note that all FTL Commands / Responses are defined in Section 2.6.

Y1 = Destination address of command (30H)
Y2 = Source address of command
Y3 = File ID
Y4 = Maximum length
Y5 = Control

Z1 = 1DH which indicates SEND BLOCK
Z2 = Destination address of data
Z3 = Block #
Z4 - Z34 = Data (maximum of 31 bytes)
or
Z1 = 1CH which indicates RETRY / DENY
Z2 = Destination address of response
Z3 = Source address of response (30H)
Z4 = Retry delay

VMC Command	Code	Sub-command	VMC Data	Validator Response
EXPANSION COMMAND	37H	FBH **FTL** RETRY / DENY	Y1-Y3	None

The VMC is retrying, denying, or aborting a data transfer to/from the bill validator whose destination address will always be (30H). Note that all FTL Commands / Responses are defined in Section 2.6.

Y1 = Destination address of command (30H)
Y2 = Source address of command
Y3 = Retry delay

VMC Command	Code	Sub-command	VMC Data	Validator Response
EXPANSION COMMAND	37H	FCH **FTL** SEND BLOCK	Y1-Y33	None

CSC ServiceWorks – Ex. 1008
Page 90 of 270

The VMC is sending data to the bill validator whose destination address will always be (30H). Note that all FTL Commands / Responses are defined in Section 2.6.

Y1 = Destination address of command & data (30H)
Y2 = Block #
Y3 - Y33 = Data (maximum of 31 bytes)

VMC Command	Code	Sub-command	VMC Data	Validator Response
EXPANSION COMMAND	37H	FDH **FTL** OK TO SEND	Y1-Y2	Z1-Z34 (immediate or POLLed)

The VMC is indicating that it is OK for the bill validator to transfer data. The destination address will always be the validator (30H). Note that all FTL Commands / Responses are defined in Section 2.6.

Y1 = Destination address of command (30H)
Y2 = Source address of command

Z1 = 1DH which indicates SEND BLOCK
Z2 = Destination address of data
Z3 = Source address of data
Z4 - Z34 = Data (maximum of 31 bytes)

VMC Command	Code	Sub-command	VMC Data	Validator Response
EXPANSION COMMAND	37H	FEH **FTL** REQ TO SEND	Y1-Y5	Z1 (immediate or POLLed)

The VMC is requesting to send data to the bill validator whose destination address will always be (30H). Note that all FTL Commands / Responses are defined in Section 2.6.

Y1 = Destination address of command (30H)
Y2 = Source address of command
Y3 = File ID
Y4 = Maximum length
Y5 = Control

CSC ServiceWorks – Ex. 1008
Page 91 of 270

Z1 = 1EH which indicates OK TO SEND
Z2 = Destination address of response
Z3 = Source address of response (30H)

or

Z1 = 1CH which indicates RETRY / DENY
Z2 = Destination address of response
Z3 = Source address of response (30H)
Z4 = Retry delay

VMC Command	Code	Sub-Command	VMC Data	Val Response
EXPANSION COMMAND	37H	FFH DIAGNOSTICS	Y1-Yn	Z1 - Zn

Y1 - Yn = Device manufacturer specific instruction for implementing various manufacturing or test modes. Y1 - Yn implies that any number of bytes can be used for the VMC data to the peripheral.

Z1 - Zn = Device manufacturer specific responses after receiving manufacturing or test instructions. Z1 - Zn implies that any number of bytes can be used for the bill validator response data from the peripheral.

6.4 Bill Validator Non-Response Time

The maximum non-response time for the bill validator is five seconds.

6.5 Bill Validator Power Requirements

The current draw for any bill validator must fall within the following limits. All measurements are at the minimum VMC Voltage Output.

Idle mode = 200 mA. (avg.) continuous

Bill transport = 2.5 A. (max.) up to 10 seconds

Note: If both peripherals are supported, vending machines should be able to provide sufficient power to simultaneously supply the above power requirements for both the bill validator **Bill Transport** and coin mechanism **Coin Acceptance** as specified in Section 5.5.

CSC ServiceWorks – Ex. 1008
Page 92 of 270

(this page intentionally left blank)

CSC ServiceWorks – Ex. 1008
Page 93 of 270

Section 7

Cashless Device(s)
VMC/Peripheral Communication Specifications

7.1 Introduction

This section defines the communications bytes sent and received between the cashless device(s) and the Vending Machine Controller (VMC). As defined in Section 2.3, there are two cashless device addresses; Cashless #1, 00010xxxB (10H) and Cashless #2, 1100xxxB (60H). The second address has been assigned to allow for two unique forms of cashless devices to be resident in the vending machine simultaneously. An example would be a card based system as Cashless Device #1 (10H) and a mobile phone based system as Cashless Device #2 (60H). **Everything defined in this section will be common to the two cashless devices – only the addresses will be different.**

Unless otherwise stated, all monetary values used by the cashless devices and the VMC will be sixteen bit (Level 01 & 02) or thirty-two bit (Level 03 if 32 bit option enabled), unsigned binary numbers. The numbers will be sent most significant byte first and scaled using the parameters provided by the cashless device's READER CONFIGURATION DATA response.

7.2 State Definitions

MDB cashless devices may be viewed as state machines. These states are as follows:

1) Inactive
2) Disabled
3) Enabled
4) Session Idle
5) Vend
6) Revalue (Level 02/03 cashless devices)
7) Negative Vend (Level 03 cashless devices)

7.2.1 Inactive

This is the state of the cashless device at power up or after a reset. While in the Inactive state, cashless devices will NOT be accepted for vending purposes. The cashless device cannot leave this state until all Setup information is received from the VMC.

7.2.2 Disabled

The cashless device automatically enters this state from the Inactive state when it has received the Setup information specified in 7.4.1. It will also enter the Disabled state from the Enabled state when it receives the READER DISABLE command. While in the Disabled state, payment medias will NOT be accepted for vending purposes. The cashless device will remain in this state until either a READER ENABLE command is received (when it will enter the Enabled state) or a RESET is received (when it will enter the Inactive state). For power management purposes, current consumption will not exceed idle mode specification during disabled state.

7.2.3 Enabled

In this state, cashless devices may be used for MDB transactions. The cashless device will remain in this state until a valid payment media is read (when it will enter the Session Idle state),

CSC ServiceWorks – Ex. 1008
Page 94 of 270

a READER DISABLE command is received (when it will return to the Disabled state) or a RESET is received (when it will enter the Inactive state).

7.2.4 Session Idle

In the Enabled state, when a valid payment media is processed, the cashless device will issue a BEGIN SESSION response to a VMC POLL and enter the Session Idle state. This indicates that the cashless device is available for vending activities. The only structured exit from the Session Idle state is through the SESSION COMPLETE message from the VMC. The SESSION COMPLETE command will cause the cashless device to respond with an END SESSION message and enable/disable itself appropriately. Vend / Negative Vend / Revalue commands will cause the cashless device to leave the Session Idle state and enter the Vend / Negative Vend / Revalue state when products are selected and purchased.

7.2.5 Vend

This state is entered from the Session Idle state upon reception of a VEND REQUEST message from the VMC. The entire Vend state is an uninterruptable command/response sequence. The cashless device will return to the Session Idle state upon completion of this sequence.

7.2.6 Revalue (Level 02 / 03 Cashless Devices)

This state is entered from the Session Idle state upon reception of a REVALUE REQUEST message from the VMC. The entire Revalue state is an uninterruptable command/response sequence. The cashless device will return to the Session Idle state upon completion of this sequence.

7.2.7 Negative Vend Request (Level 03 Cashless Devices)

This state is entered from the Session Idle state upon reception of a NEGATIVE VEND REQUEST message from the VMC. The entire Negative Vend Request state is an uninterruptable command/response sequence. The cashless device will return to the Session Idle state upon completion of this sequence.

7.3 Command Protocol

After the VMC has issued a command, no new commands may be issued until all data generated in response to that command has been received from the cashless device. The complete response may be an ACK only (e.g. the READER ENABLE command). Alternatively, it may consist of an informational response (e.g. READER CONFIGURATION DATA).

The cashless device may provide an informational response in two ways. It may respond immediately with the requested data, or the cashless device may ACK the VMC command. If ACKed, the VMC must issue POLLs until the cashless device responds with the requested data, or until the Application Maximum Response Time (defined in READER CONFIGURATION response) has elapsed.

The cashless device will define the currency type at the beginning of each session. The currency type will be used for all following transactions in that session. If the VMC does not support this currency type, it will end the session.

Below are the uninterruptable VMC commands which require an informational cashless device response and their associated result:

VMC Command	Cashless Device Response	Result
SETUP/CONFIGURATlON DATA =>	READER CONFIGURATION DATA	
EXPANSION/REQUEST ID =>	PERIPHERAL ID	
READER CANCEL =>	CANCELLED	
VEND REQUEST... VEND CANCEL =>	VEND DENIED*	
VEND REQUEST =>	VEND DENIED*	
VEND REQUEST =>	VEND APPROVED =>	VEND SUCCESS*
VEND REQUEST =>	VEND APPROVED =>	VEND FAILURE*
NEGATIVE VEND REQUEST =>	NEGATIVE VEND DENIED*	
NEGATIVE VEND REQUEST =>	NEGATIVE VEND APPROVED =>	NEGATIVE VEND SUCCESS*
NEGATIVE VEND REQUEST =>	NEGATIVE VEND APPROVED =>	NEGATIVE VEND FAILURE*
REVALUE REQUEST=>	REVALUE APPROVED/DENIED*	
SESSION COMPLETE =>	END SESSION	

*These VEND / NEGATIVE VEND / REVALUE REQUEST response sequences constitute the Vend / Negative Vend / Revalue Request states.

Below are the uninterruptable POLLed cashless device which require an informational response

from the VMC:

VMC Command & Data	Cashless Device Response	Result
POLL =>	DATA ENTRY REQUEST + DISPLAY REQUEST (optional)	
POLL =>	DATA ENTRY CANCEL	Cancelled
DATA ENTRY RESPONSE w/ FFs =>		Cancelled

Any command may be issued by the VMC at anytime providing the above command protocol is observed. There are four exceptions to this rule:

CSC ServiceWorks – Ex. 1008
Page 96 of 270

1) VEND REQUEST, REVALUE REQUEST, and NEGATIVE VEND REQUEST response sequences may only be initiated in the Session Idle state.

2) The VMC may issue a VEND CANCEL command after issuing a VEND REQUEST, but before receiving a VEND APPROVED/DENIED response. In this case the cashless device will issue a VEND DENIED response to satisfy the original VEND REQUEST response requirement.
3) The cashless device may issue DISPLAY REQUESTs in response to POLLs at any time, if the VMC's display is available for use.
4) The RESET command is allowed at any time, it is not subject to any restrictions.

If a VMC command is received by the cashless device while it is in one of the preceding uninterruptable states, the following will occur:

The cashless device will ACK the offending command (no data response will be forthcoming). The cashless device will respond to the next poll with the "COMMAND OUT OF SEQUENCE" response (0BH).

It should be pointed out to cashless device developers that a command out of sequence will always cause the VMC to issue a RESET command to the cashless device.

7.3.1 Multi-Message Response Format

The multi-message response format permits the cashless device to send multiple messages in response to a single command or POLL. Because all messages are of a fixed length, there is no confusion determining where one message ends and the next message begins. (The total message length is subject to the 36 byte limit imposed by Section 2 of this standard.)

For example, if a cashless device fails to correctly write a payment media after a VEND REQUEST, it may need to report:

1) VEND DENIED
2) MALFUNCTION/ERROR subcode 07h
3) SESSION CANCEL REQUEST

The multi-message response (hex) would look like this:

06	0A 07	04	1B *
1	2	3	4

The first byte above (marked 1) is the VEND DENIED message. The next two bytes (marked 2) are the MALFUNCTION/ERROR message. The third and final message is the CANCEL SESSION REQUEST (marked 3). An eight bit checksum with the mode bit set (marked 4) finishes the message.

CSC ServiceWorks – Ex. 1008
Page 97 of 270

It is important to note that the controller must service the messages in the order in which they are received. This is necessary to ensure that command protocol is maintained.

CSC ServiceWorks – Ex. 1008
Page 98 of 270

7.3.2 Coin Mechanism Escrow Return Actions

If present, the cashless device return button is controlled by the cashless device and it is the responsibility of the cashless device to terminate a vend sequence if the return button is pressed during a vend sequence.

The reaction of the VMC to the coin mechanism escrow return will vary depending upon the state of the system at the time it is pressed. If escrow return is allowed then a coin mechanism escrow return should be interpreted as VEND CANCEL or END OF SESSION.

1) In the Enabled state, the VMC should send a READER CANCEL command to the cashless device. This allows the user to abort a pre-approved on-line authorisation request.

2) In the Session Idle state, the VMC should send a SESSION COMPLETE command to the cashless device. This will return the cashless device to the Enabled state. The escrow return may cause the system to enter the revalue state prior to the VMC sending the “SESSION COMPLETE” command.

3) In the Vend state, before the cashless device has sent a VEND APPROVED or a VEND DENIED, the VMC should send a VEND CANCEL command to the cashless device. This will cancel the vend and cause the cashless device to refund the payment media if necessary.

4) In all other cases, no message is sent from the VMC to the cashless device.

CSC ServiceWorks – Ex. 1008
Page 99 of 270

TABLE 1: COMMANDS & RESPONSES

Command	Code	Sub-command / Data	Response	VMC / Cashless Level Support
Reset	10H 60H	(none)	No Data *	(Level 01+)
Setup	11H 61H	00H - Config Data	01H - Reader Config Data	(Level 01+)
		01H - Max/Min Prices	No Data *	(Level 01+)
Poll	12H 62H	(none)	00H - Just Reset 01H - Reader Config Data 02H - Display Request 03H - Begin Session 04H - Session Cancel Request 05H - Vend Approved 06H - Vend Denied 07H - End Session 08H - Cancelled 09H - Peripheral ID 0AH - Malfunction / Error 0BH - Cmd Out Of Sequence 0DH - Revalue Approved 0EH - Revalue Denied 0FH - Revalue Limit Amount 10H - User File Data 11H - Time/Date Request 12H - Data Entry Request 13H - Data Entry Cancel 14H -1AH 1BH - FTL REQ TO RCV 1CH - FTL RETRY / DENY 1DH - FTL SEND BLOCK 1EH - FTL OK TO SEND 1FH - FTL REQ TO SEND	(Level 01+) (Level 01+) (Level 01+) (Level 01+) (Level 01+) (Level 01+) (Level 01+) (Level 01+) (Level 01+) (Level 01+) (Level 01+) (Level 01+) (Level 02+) (option) (Level 02+) (option) (Level 02+) (option) (Level 02) ** (Level 02+) (option) (Level 03+) (option) (Level 03+) (option) (For Future Use) (Level 03+) (option) (Level 03+) (option) (Level 03+) (option) (Level 03+) (option) (Level 03+) (option) (For Future Use) (Level 01+)

			20H - FEH FFH - Diagnostic Response	
Vend	13H 63H	00H - Vend Request	05H - Vend Approved 06H - Vend Denied	(Level 01+) (Level 01+)
		01H - Vend Cancel	06H - Vend Denied	(Level 01+)
		02H - Vend Success	No Data *	(Level 01+)
		03H - Vend Failure	No Data *	(Level 01+)
		04H - Session Complete	07H - End Session	(Level 01+)
		05H - Cash Sale	No Data *	(Level 01+)
		06H - Negative Vend Request	05H – Vend Approved 06H – Vend Denied	(Level 03+) (option) (Level 03+) (option)
Reader	14H 64H	00H - Reader Disable	No Data *	(Level 01+)
		01H - Reader Enable	No Data *	(Level 01+)
		02H - Reader Cancel	08H - Cancelled	(Level 01+)
		03H - Data Entry Response	No Data *	(Level 03+) (option)
Revalue (option)	15H 65H	00H - Revalue Request	0DH - Revalue Approved 0EH - Revalue Denied	(Level 02+) (option) (Level 02+) (option)
		01H - Revalue Limit Request	0FH - Revalue Limit Amount 0EH - Revalue Denied	(Level 02+) (option) (Level 02+) (option)
Expansion	17H 67H	00H - Request ID	09H - Peripheral ID	(Level 01+)
		01H - Read User File	10H - User File Data	(Level 02) **
		02H - Write User File	No Data *	(Level 02) **
		03H - Write (option) Time/Date	No Data *	(Level 02+) (option)
		04H - Optional Feature Enabled	No Data	(Level 03+)
		FAH - FTL (option) REQ TO RCV	1DH - SEND BLOCK 1CH - RETRY / DENY	(Level 03+) (option) (Level 03+) (option)
		FBH - FTL (option) RETRY / DENY	No Data	(Level 03+) (option)
		FCH - FTL (option) SEND BLOCK	No Data	(Level 03+) (option)
		FDH - FTL (option) OK TO SEND	1DH - SEND BLOCK	(Level 03+) (option)
		FEH - FTL (option) REQ TO SEND	1EH - OK TO SEND 1CH - RETRY/DENY	(Level 03+) (option) (Level 03+) (option)
		FFH - Diagnostics	FFH - Diagnostic Response	(Level 01+)

* No Data response = peripheral just responds with ACK or NAK

**** Obsolete Command – Do not use for new designs. Use EXPANSION - Diagnostics.**

The term (option) indicates that the command/response is a feature enabled by option bits.

CSC ServiceWorks – Ex. 1008
Page 101 of 270

NOTE: Cashless device responses which are part of request / response sequences are listed more than once in the above table since the cashless device may respond either immediately to the request (within 5 milliseconds) or to a later POLL.

7.4 VMC/ Cashless Device Command/Response Formats

In the following section, the term "Reader" will indicate either Cashless Device #1 or #2.

7.4.1 Reset and Initialising

RESET
(10H / 60H)

Reader response:

No Data response

If this command is received by a cashless device it should terminate any ongoing transaction (with an appropriate credit adjustment, if appropriate), eject the payment media (if applicable), and go to the Inactive state.

All Level 02 and above VMCs must follow the RESET command with the following cashless device initializing sequence: (Any new Level 01 VMCs are recommended to follow the sequence.)

Note that the example shows commands for Cashless Device #1 (10H) only. They would be the same for Cashless Device #2 (address 60H).

POLL – 12h
To obtain "JUST RESET" response

SETUP CONFIGURATION DATA – 11 00h
To send the VMC's configuration data and obtain the cashless device's data

SETUP MAX/MIN PRICE – 11 01h
To send the maximum and minimum prices in the VMC. These prices must be sent as Level 01/02 16 bit credit.

CSC ServiceWorks – Ex. 1008
Page 102 of 270

EXPANSION REQUEST ID – 17 00h

To obtain additional cashless device information and options (options in Level 03+ only)

EXPANSION ENABLE OPTIONS – 17 04h (Level 03+ only)

To enable desired options

SETUP MAX/MIN PRICE – 11 01h (Level 03+ and option bits 1 & 2 only)

If 32 bit currency option and/or multi currency – multi lingual is enabled (i.e. bits 1 & 2 of expansion enable options), perform **SETUP MAX/MIN PRICE** again to get 32 bit credit and/or user currency – user language (this conditions will be known as EXPANDED CURRENCY MODE in the rest of the document).

READER ENABLE – 14 01h

To enable cashless device (if desired)

7.4.2 SETUP - Config Data

SETUP (11H / 61H)	Config Data (00H) Y1	VMC Feature Level Y2	Columns on Display Y3	Rows On Display Y4	Display Info Y5

Y1 : Configuration data.
VMC is sending its configuration data to reader.

Y2 : VMC Feature Level.
Indicates the feature level of the VMC. The available feature levels are:

01 - The VMC is not capable or will not perform the advanced features as specified in Table 1: COMMANDS & RESPONSES following Section 7.3.2. The reader will not provide advanced information to the VMC, but can do the advanced features internally (transparently to the VMC). The reader has no revaluation capability.

02 - The VMC is capable and willing to perform the advanced features as specified in Table 1: COMMANDS & RESPONSES following Section 7.3.2. The reader will provide advanced information to the VMC (if possible) and will not do the advanced features internally.

03 - The VMC is able to support level 02, but also supports some or all of the optional features listed in the EXPANSION ID command (i.e., file transfer, 32 bit credit, multi-currency / language features, negative vend, and / or data entry).

Y3 : Columns on Display. The number of columns on the display. Set to 00H if the display is not available to the reader.

CSC ServiceWorks – Ex. 1008
Page 103 of 270

Y4 : Rows on Display.
The number of rows on the display

Y5 : Display Information - xxxxxyyy
xxxxx = Unused
yyy = Display type
000 : Numbers, upper case letters, blank and decimal point.
001 : Full ASCII
010-111: Unassigned

Reader Response:

Reader Config Data (01H) Z1	Reader Feature Level Z2	Country Code High Z3	Country Code Low Z4	Scale Factor Z5	Decimal Places Z6	Application Maximum Response Time Z7	Miscellaneous Options Z8

Z1 : READER - Configuration data.
Indicates the payment media reader is responding to a SETUP – Configuration data request from the VMC.

Z2 : Reader Feature Level.
Indicates the feature level of the reader. Currently feature levels are:

01 - The reader is not capable or will not perform the advanced features as specified in Table 1: COMMANDS & RESPONSES following Section 7.3.2. The reader will not provide advanced information to the VMC, but can do the advanced features internally (transparently to the VMC). The reader has no revaluation capability.

02 - The reader is capable and willing to perform the advanced features as specified in Table 1: COMMANDS & RESPONSES following Section 7.3.2. The reader will provide advanced information to the VMC (if possible) and will not do the advanced features internally.

03 - The reader is able to support level 02, but also supports some or all of the optional features listed in the EXPANSION ID command (i.e., file transfer, 32 bit credit, multi-currency / language features, negative vend, and / or data entry).

Z3-Z4 : Country / Currency Code - packed BCD.
The packed BCD country / currency code of the reader can be sent in two different forms depending on the value of the left most BCD digit.

If the left most digit is a 0, the International Telephone Code is used to indicate the country that the reader is set-up for. For example, the USA code is 00 01H (Z3 = 00 and Z4 = 01).

If the left most digit is a 1, the latest version of the ISO 4217 numeric currency code is used (see Appendix A1). For example, the code for the US dollar is 18 40H (Z2 = 18 and Z3 = 40) and for the Euro is 1978 (Z3 = 19 and Z4 = 78). Use FFFFh if the country code in unknown.

CSC ServiceWorks – Ex. 1008
Page 104 of 270

For level 3 cashless devices, it is mandatory to use the ISO 4217 numeric currency code (see Appendix A1).

Z5 : Scale Factor.
The multiplier used to scale all monetary values transferred between the VMC and the reader.

Z6 : Decimal Places.
The number of decimal places used to communicate monetary values between the VMC and the payment media reader.

All pricing information sent between the VMC and the payment media reader is scaled using the scale factor and decimal places. This corresponds to:

$$\text{ActualPrice} = P \cdot X \cdot 10^{-Y}$$

where P is the scaled value send in the price bytes, and X is the scale factor, and Y is the number of decimal places. For example if there are 2 decimal places and the scale factor is 5, then a scaled price of 7 will mean an actual of 0.35.

Z7 : Application Maximum Response Time - seconds.
The maximum length of time a reader will require to provide a response to any command from the VMC. The value reported here supercedes the payment reader's default NON-RESPONSE time defined in section 7.5 if the value reported here is greater.

Z8 : Miscellaneous Options – xxxxyyyy

xxxx: Unused (must be set to 0)

yyyy: Option bits

b0=0: The payment media reader is NOT capable of restoring funds to the user's payment media or account. Do not request refunds.

b0=1: The payment media reader is capable of restoring funds to the user's payment media or account. Refunds may be requested.

b1=0: The payment media reader is NOT multivend capable.

Terminate session after each vend.

b1=1: The payment media reader is multivend capable. Multiple items may be purchased within a single session.

b2=0: The payment media reader does NOT have a display.

b2=1: The payment media reader does have its own display.

b3=0: The payment media reader does NOT support the VEND/CASH SALE subcommand.

b3=1: The payment media reader does support the VEND/CASH SALE subcommand.

b4-b7=0 **Any future options must be covered by the EXPANSION COMMAND option bits.**

CSC ServiceWorks – Ex. 1008
Page 105 of 270

7.4.3 SETUP – Max / Min Prices

SETUP (11H / 61H)	Max / Min Prices (01H) Y1	Maximum Price Y2-Y3	Minimum Price Y4-Y5

Level 01 / 02 / 03 Readers

Y1 : Max / Min prices
Indicates the VMC is sending the price range to the reader.

Y2 - Y3 : Maximum Price – scaled
This information should be sent as soon as the VMC prices have been established and any time there is a change in the maximum price, If the VMC does not know the maximum price, FFFFh should be sent.

Y4 -Y5 : Minimum Price – scaled
This information should be sent as soon as the VMC prices have been established and any time there is a change in the minimum price. If the VMC does not know the minimum price, 0000h should be sent.

SETUP (11H / 61H)	Max / MinPrices (01H) Y1	Maximum Price Y2-Y5	Minimum Price Y6-Y9	Currency Code Y10-Y11

Level 03 (EXPANDED CURRENCY MODE) Readers

Y1 : Max / Min prices
Indicates the VMC is sending the price range to the reader.

Y2 – Y5 : Maximum Price – scaled
This information should be sent as soon as the VMC prices have been established and any time there is a change in the maximum price, If the VMC does not know the maximum price, FFFFFFFFh should be sent.

Y6 –Y9 : Minimum Price – scaled
This information should be sent as soon as the VMC prices have been established and any time there is a change in the minimum price. If the VMC does not know the minimum price, 00000000h should be sent.

Y10-Y11 Currency Code
The currency code used during this command per ISO 4217 (see Appendix A1). The value is configured as packed BCD with the leading digit a 1 (one). For example, the code for the US dollar would be 1840 (Z10 = 18 and Z11 = 40). and for the Euro is 1978 (Z10 = 19 and Z11 = 78).

Reader response:

CSC ServiceWorks – Ex. 1008
Page 106 of 270

No Data response

7.4.4 POLL

POLL
(12H / 62H)

The POLL command is used by the VMC to obtain information from the payment media reader. This information may include user actions (CANCEL SESSION REQUEST), hardware malfunctions (MALFUNCTION /ERROR), software malfunctions (COMMAND OUT OF SEQUENCE) or information explicitly requested by the controller (READER CONFIGURATION DATA). An ACK response indicates that no error states exist, and either no information request is pending or pending information is not yet ready for transmission.

In addition to an ACK, the VMC may receive the following POLL responses from the payment media reader.

CSC ServiceWorks – Ex. 1008
Page 107 of 270

Reader responses:

Just Reset (00H) Z1

Z1 : JUST RESET
Indicates the payment media reader has been reset.
Note: the difference between ACK and JUST RESET responses is:

00H 00H* =JUST RESET
00H* =ACK
*mode bit=1

Reader Config Info (01H) Z1	Reader Feature Level Z2	Country Code High Z3	Country Code Low Z4	Scale Factor Z5	Decimal Places Z6	Application Maximum Response Time Z7	Miscellaneous Options Z8

See paragraph 7.4.2 for a detailed explanation of this response.

Display Request (02H) Z1	Display Time Z2	Display Data Z3-Z34

Z1 : DISPLAY REQUEST
The payment media reader is requesting a message to be displayed on the VMC's display.

Z2 : Display Time - 0.1 second units
The requested display time. Either the VMC or the payment media reader may overwrite the message before the time has expired.

Z3-Z34 : Display Data – ASCII
The message to be displayed. Formatting (leading and/or trailing blanks) is the responsibility of the payment media reader.

The number of bytes must equal the product of Y3 and Y4 up to a maximum of 32 bytes in the setup/configuration command.

CSC ServiceWorks – Ex. 1008
Page 108 of 270

Begin Session (03H) Z1	Funds Available Z2-Z3

Level 01 Readers

Z1 : BEGIN SESSION (**level 01 readers**)
Allow a patron to make a selection, but do not dispense product until funds are approved.

Z2-Z3 : Funds Available - scaled

a. Lesser of the user's payment media or account balance or FFFEh units.

b. Not yet determined - FFFFh.

Begin Session (03H) Z1	Funds Available Z2-Z3	Payment media ID Z4-Z7	Payment Type Z8	Payment Data Z9-Z10

Level 02 / 03 Readers

Z1 : BEGIN SESSION (**level 02/03 readers**)
Allow a patron to make a selection, but do not dispense product until funds are approved.

Z2-Z3 : Funds Available – scaled

a. Lesser of the user's payment media or account balance or FFFEh units.

b. Not yet determined - FFFFh.

Z4-Z7 : Payment media ID.
00000000h-FFFFFFFEh=Payment media identification number. FFFFFFFFh = unknown payment media ID.

Z8 : Type of payment:
00xxxxxxb = normal vend card (refer EVA-DTS Standard, Appendix A.1.1 Definitions)
x1xxxxxxb = test media
1xxxxxxxb = free vend card
xx000000b -0 VMC default prices.
xx000001b -1 User Group (Z9 = EVA-DTS Element DA701)
Price list number (Z10 = EVA-DTS Element LA101)*
xx000010b -2 User Group (Z9 = EVA-DTS Element DA701)
Discount group index (Z10 = EVA-DTS Element MA403)
xx000011b -3 Discount percentage factor (Z9=00, Z10 = 0 to 100**,

report as positive value in EVA-DTS Element MA404)

xx000100b -4 Surcharge percentage factor (Z9=00, Z10 = 0 to 100**, report as negative value in EVA-DTS Element MA404)

* User Group is a segmentation of all authorized users. It allows selective cost allocation. A User Group usually has no direct relation to a price list.
Price Lists are tables of prices. Each Price List contains an individual price for each product.
Discount Group indicates the Price List on which the Percentage Factor will be applied.
If the User Group, the Price List or Discount Group is unknown

by the VMC, the normal prices are used (Z8 is defaulted to 00h).

Minimum value for Z9 and Z10 is 0.

** Percentages are expressed in binary (00 to 64h)

Note:
These functions may NOT be supported by all VMCs.

Z9-Z10 : Payment data as defined above.

Begin Session (03H) Z1	Funds Available Z2-Z5	Payment media ID Z6-Z9	Payment Type Z10	Payment Data Z11-Z12	User Language Z13-Z14	User Currency Code Z15-Z16	Card Options Z17

Level 03 (EXPANDED CURRENCY MODE) Readers

Z1 : BEGIN SESSION (**level 03 readers / EXPANDED CURRENCY MODE**)
Allow a patron to make a selection, but do not dispense product until funds are approved.

Z2-Z5 : Funds Available – scaled

a. Lesser of the user's payment media or account balance or FFFFFFFEh units.

b. Not yet determined - FFFFFFFFh.

Z6-Z9 : Payment media ID.
00000000h-FFFFFFFEh=Payment media identification number. FFFFFFFFh = unknown payment media ID.

CSC ServiceWorks – Ex. 1008
Page 110 of 270

Z10 : Type of payment:

00xxxxxxb = normal vend card (refer EVA-DTS Standard, Appendix A.1.1 Definitions)
x1xxxxxxb = test media
1xxxxxxxb = free vend card
xx000000b -0 VMC default prices.
xx000001b -1 User Group (Z11 = EVA-DTS Element DA701)
Price list number (Z12 = EVA-DTS Element LA101)*
xx000010b -2 User Group (Z11 = EVA-DTS Element DA701)
Discount group index (Z12 = EVA-DTS Element MA403)
xx000011b -3 Discount percentage factor (Z11=00, Z12 = 0 to 100**, report as positive value in EVA-DTS Element MA404)
xx000100b -4 Surcharge percentage factor (Z11=00, Z12 = 0 to 100**, report as negative value in EVA-DTS Element MA404)

* User Group is a segmentation of all authorized users. It allows selective cost allocation. A User Group usually has no direct relation to a price list.
Price Lists are tables of prices. Each Price List contains an individual price for each product.
Discount Group indicates the Price List on which the Percentage Factor will be applied.
If the User Group, the Price List or Discount Group is unknown by the VMC, the normal prices are used (Z10 is defaulted to 00h).

Minimum value for Z11 and Z12 is 0.

** Percentages are expressed in binary (00 to 64h)

Note:
These functions may NOT be supported by all VMCs.

Z11-Z12: Payment data as defined above.

Z13-Z14 User language to use during this session (2 ASCII characters per ISO 639:latest version). The user language is read from the patrons card and, if supported, should be used instead of the VMC default language (taken according to the setup command International Telephone code) up to the next “session complete”. If the VMC is not able to support this language, the default setting should be used.

Z15-Z16 User currency code to use during this session per ISO 4217 (see Appendix A1). The value is configured as packed BCD with the leading digit a 1 (one). For example, the code for the US dollar would be 1840 (Z15 = 18 and Z16 = 40).

CSC ServiceWorks – Ex. 1008
Page 111 of 270

and for the Euro is 1978 (Z6 = 19 and Z7 = 78).

Z17 Card options (overrides any previous default settings for reader)

- b0=0: The VMC displays the credit if it is programmed to do so
- b0=1: The VMC **must not display** the credit (privacy purpose – user option)
- b1=0: The actual inserted patrons card has no refund capability
- b1=1: The actual inserted patrons card has refund capability (Note: a reader with refund capability may be used with both type of cards)
- b2=0 The actual inserted patrons card has no revalue capability
- b2=1 The actual inserted patrons card has revalue & negative vend capability
- b3-b7: Reserved for future extensions (unused bits must be set to 0)

Refund means the ability to put money back on the inserted patrons card up to the value of the last transaction. Revalue means the ability to put money back on the inserted patrons card up to any value.

The card reader will define the currency type at the beginning of each card session. **The currency type will be used for all following transactions in that session. If the VMC does not support this currency type, it will end the session.**

Session Cancel Request (04H)
Z1

Z1 : SESSION CANCEL REQUEST
The payment media reader is requesting the VMC to cancel the session. The VMC should initiate an eventual SESSION COMPLETE. This response is sent to the VMC whenever the payment media is removed or a request for removal from the reader is made by the user (e.g. if a return button on the reader is pressed).

Vend Approved (05H)	Vend Amount
Z1	Z2-Z3

Level 01 / 02 / 03 Readers

Refer to paragraph 7.4.5 for detailed explanation.

Vend Approved (05H)	Vend Amount

CSC ServiceWorks – Ex. 1008
Page 112 of 270

Z1	Z2-Z5

Level 03 (EXPANDED CURRENCY MODE) Readers

Refer to paragraph 7.4.5 for detailed explanation.

Vend Denied (06H) Z1

Refer to paragraph 7.4.5 for detailed explanation.

End Session (07H) Z1

Refer to paragraph 7.4.9 for detailed explanation.

Cancelled (08H) Z1

Refer to paragraph 7.4.14 for detailed explanation.

Peripheral ID (09H) Z1	Manufacturer Code Z2-Z4	Serial Number Z5-Z16	Model Number Z17-Z28	Software Version Z29-Z30

Level 01 / 02 / 03 Readers (If VMC indicates Level 01 or 02)

Z1 : PERIPHERAL ID
Reader is sending peripheral ID information.

Z2 - Z4 : Manufacturer Code - ASCII
Identification code for the equipment supplier. Currently defined codes are listed in the **EVA** document entitled "***European Vending Association Data Transfer Standard***" (**EVA-DTS**), the Audit Data Lists section, sub-section 2, "Manufacturer Codes".

Z5-Z16 : Serial Number – ASCII
Factory assigned serial number.

Z17-Z28 : Model Number - ASCII

Manufacturer assigned model number.

Z29-Z30 : Software Version - packed BCD
Current software version.

Peripheral ID (09H) Z1	Manufacturer Code Z2-Z4	Serial Number Z5-Z16	Model Number Z17-Z28	Software Version Z29-Z30	Optional Feature bits Z31 - Z34

Level 03 Readers (If VMC indicates Level 03)

Z1 : PERIPHERAL ID
Reader is sending peripheral ID information.

Z2 - Z4 : Manufacturer Code - ASCII
Identification code for the equipment supplier. Currently defined codes are listed in the **EVA** document entitled "***European Vending Association Data Transfer Standard***" (**EVA-DTS**), the Audit Data Lists section, sub-section 2, "Manufacturer Codes".

Z5-Z16 : Serial Number – ASCII
Factory assigned serial number.

Z17-Z28 : Model Number - ASCII
Manufacturer assigned model number.

Z29-Z30 : Software Version - packed BCD
Current software version.

Z31- Z34 Optional Feature Bits. Each of the 32 bits indicate an optional feature availability. Bits should be sent in descending order, i.e. bit 31 is sent first and bit 0 is sent last. Options **must be enabled by the VMC** using the Expansion Optional Feature Bit Enable (17H-04H) command and **all features are disabled after a reset**. Currently defined options are:

b0 - File Transport Layer supported
b1 - 0 = 16 bit monetary format, 1 = 32 bit monetary format
b2 - multi currency / multi lingual
b3 - negative vend
b4 - data entry
b5 to b31 not used (should be set to 0)

Note: If 32 bit monetary format (b1) and or multi currency / multi lingual (b2) options are enabled, this condition will be known as **EXPANDED CURRENCY MODE** in the rest of the document.

CSC ServiceWorks – Ex. 1008
Page 114 of 270

Malfunction / Error	Error Code
(0AH) Z1	Z2

Z1 : MALFUNCTION/ERROR
The payment media reader is reporting a malfunction or error.

Z2 : Error Code – xxxxyyyy

xxxx	error types
0000:	Payment media Error1
0001:	Invalid Payment media1
0010:	Tamper Error1
0011:	Manufacturer Defined Error1
0100:	Communications Error2
0101:	Reader Requires Service2
0110:	Unassigned2
0111:	Manufacturer Defined Error2
1000:	Reader Failure3
1001:	Communications Error3
1010:	Payment media Jammed3
1011:	Manufacturer Defined Error
1100:	Refund error – internal reader credit lost
1101-1111:	Unassigned

1 Transient error - Reported once
2 Non-transient error - Reported every POLL until cleared. Reader still functional.
3 Non-transient error - Reported every POLL until cleared. Reader not presently functional.

yyyy = Manufacturer defined subcode

Transient Error Handling
The error will be reported to the VMC until it has been ACKnowledged. The error state will be cleared in the reader, and normal operations will continue.

Non-transient Error Handling
The error will be reported to the VMC at each POLL as long as it exists. If the reader is still functional, multi-message responses will allow normal responses in addition to the error report.

CSC ServiceWorks – Ex. 1008
Page 115 of 270

Note: Refund error is sent from the media reader when it is not able to refund money to the payment media following a failed or cancelled vend. The reader internally cancels the credit and the credit is lost.

Command Out of Sequence (0BH) Z1

Level 01 Readers

Z1 : COMMAND OUT OF SEQUENCE (Level 01 readers)
The payment media reader has received a command that is not executable in its current state, or that violates one of the uninterruptable sequences. The offending command should be ACKed but not acted upon the reader. The VMC will send the RESET command to the reader upon reception of this response. Note that the reader will continue with any credit update process prior to resetting.

Command Out of Sequence (0BH) Z1	Status Z2

Level 02 / 03 Readers

Z1 : COMMAND OUT OF SEQUENCE. (Level 02/03 readers)
The payment media reader has received a command that is not executable in its current state, or that violates one of the uninterruptable sequences. The offending command should be ACKed but not acted upon the reader. The VMC will send the RESET command to the reader upon reception of this response. Note that the reader will continue with any credit update process prior to resetting.

Z2 : Status
The state of the payment media reader.
01: Inactive state
02: Disabled state
03: Enabled state
04: Session idle state
05: Vend state
06: Revalue state
07: Negative Vend state

Revalue

CSC ServiceWorks – Ex. 1008
Page 116 of 270

Approved (0DH) Z1

Level 02 / 03 Readers

Refer to paragraph 7.4.16 for detailed explanation.

Revalue Denied (0EH) Z1

Level 02 / 03 Readers

Refer to paragraph 7.4.16 for detailed explanation.

Revalue Limit Amount (0FH) Z1	Revalue Limit Amount Z2-Z3

Level 02 / 03 Readers

Refer to paragraph 7.4.17 for detailed explanation.

CSC ServiceWorks – Ex. 1008
Page 117 of 270

Revalue Limit Amount (0FH) Z1	Revalue Limit Amount Z2-Z5

Level 03 (EXPANDED CURRENCY MODE) Readers

Refer to paragraph 7.4.17 for detailed explanation.

User File Data (10H) Z1	Number of User File Z2	Length Of User File Z3	User Data Z4-Zn

Level 02 Readers

Obsolete Response – Do not use for new designs!! (Use EXPANSION – Diagnostics)

Refer to paragraph 7.4.19 for detailed explanation.

Time/Date Request (11H) Z1

Level 02 / 03 Readers

Z1 : TIME DATE REQUEST
In certain circumstances it will be necessary to synchronize the real time clock of the card reader with real time clock of the VMC. The card reader will respond with TIME/DATE REQUEST to a POLL command of the VMC. The VMC will follow with the EXPANSION-WRITE TIME/DATE FILE to the card reader. Refer to paragraph 7.4.19.

CSC ServiceWorks – Ex. 1008
Page 118 of 270

Data Entry Request Response (12H) Z1	Data Entry Length and Repeat Bit Z2

Level 03 Readers (if Data Entry option enabled)

Z1 : DATA ENTRY REQUEST
The reader is making a DATA ENTRY REQUEST.

Z2 : DATA ENTRY LENGTH and REPEAT BIT
rnnnnnnnn
r – Repeat Bit (0 = initial request / 1 = repeated requests
nnnnnnn – number of requested characters / keys

Depending on the type of data being entered, it is a higher level system decision on whether or not the data is displayed on either the vending machine or card reader. If the data is not displayed (a recommendation for certain types of sensitive data) the vending machine or card reader display can still be optionally used to indicate a prompt and/or representation of the data entered for user feedback (i.e., asterisks *****).

If the card reader uses the vending machine's display for Data Entry information, it **must concatenate** the DATA ENTRY REQUEST Response (12H) with the DISPLAY REQUEST response (02H). Upon receipt of the response pair, the vending machine controller will give its display to the card reader for the duration of the Data Entry session plus the amount of time specified in the Z2 Display Time following the end of the session (regardless of a normal or cancelled session). In essence, the vending machine controller will not write anything to its display during the Data Entry session plus the Z2 time. The reader will be able to update the Data Entry information on the vending machine's display by sending additional DISPLAY REQUEST responses during the Data Entry session.

Please see additional DATA ENTRY procedures in Section 7.4.15.

Data Entry Cancel (13H) Z1

Level 03 Readers (if Data Entry option enabled)

Z1 : DATA ENTRY CANCEL
The user has pushed the reader's RETURN button before completing the DATA

ENTRY. The VMC should terminate all DATA ENTRY activity in progress.

CSC ServiceWorks – Ex. 1008
Page 119 of 270

FTL
REQ TO RCV
(1BH)
Z1

Level 03 Readers (if File Transport Layer option enabled)

Z1 : **FTL** REQ TO RCV
The reader is requesting to receive data from a device or VMC.

Z2 : **FTL** Destination Address
The destination address of the response as defined in Section 2.6.

Z3 : **FTL** Source Address (Reader = 10H / 60H)
The source address of the response as defined in Section 2.6.

Z4 : **FTL** File ID
The type of information desired as defined in Section 2.6.

Z5 : **FTL** Maximum Length
The total number of blocks in the file as defined in Section 2.6.

Z6 : **FTL** Control
Data transfer control information as defined in Section 2.6.

FTL
RETRY/DENY
(1CH)
Z1

Level 03 Readers (if File Transport Layer option enabled)

Z1 : **FTL** RETRY / DENY
The reader is requesting a device or VMC to retry or deny the last FTL command.

Z2 : **FTL** Destination Address
The destination address of the response as defined in Section 2.6.

Z3 : **FTL** Source Address (Reader = 10H / 60H)
The source address of the response as defined in Section 2.6.

Z4 : **FTL** Retry Delay
The retry delay as defined in Section 2.6.

CSC ServiceWorks – Ex. 1008
Page 120 of 270

FTL
SEND
BLOCK
(1DH)
Z1

Level 03 Readers (if File Transport Layer option enabled)

Z1 : **FTL** SEND BLOCK
The reader is sending a block of data (maximum of 31 bytes) to a device or VMC.

Z2 : **FTL** Destination Address
The destination address of the response as defined in Section 2.6.

Z3 : **FTL** Block #
The sequential number of the block as defined in Section 2.6.

Z4- Z34 : **FTL** Data (maximum of 31 bytes)
The actual data portion of the block as defined in Section 2.6.

FTL
OK TO SEND
(1EH)
Z1

Level 03 Readers (if File Transport Layer option enabled)

Z1 : **FTL** OK TO SEND
The reader is indicating that it is OK for the device or VMC to send it data.

Z2 : **FTL** Destination Address
The destination address of the response as defined in Section 2.6.

Z3 : **FTL** Source Address (Reader = 10H / 60H)
The source address of the response as defined in Section 2.6.

CSC ServiceWorks – Ex. 1008
Page 121 of 270

FTL REQ TO SEND (1FH) Z1

Level 03 Readers (if File Transport Layer option enabled)

Z1 : **FTL** REQ TO SEND
The reader is requesting to send data to a device or VMC.

Z2 : **FTL** Destination Address
The destination address of the response as defined in Section 2.6.

Z3 : **FTL** Source Address (Reader = 10H / 60H)
The source address of the response as defined in Section 2.6.

Z4 : **FTL** File ID
The type of information desired as defined in Section 2.6.

Z5 : **FTL** Maximum Length
The total number of blocks in the file as defined in Section 2.6.

Z6 : **FTL** Control
Data transfer control information as defined in Section 2.6.

Diagnostics Response (FFH) Z1	User Defined Data Z2-Zn

Refer to paragraph 7.4.28 for detailed explanation.

7.4.5 VEND - Request

Vend (13H / 63H)	Vend Request (00H) Y1	Item Price Y2-Y3	Item Number Y4-Y5

Level 01 / 02 / 03 Readers

Y1 : VEND REQUEST
The patron has made a selection. The VMC is requesting vend approval from the payment media reader before dispensing the product.

Y2-Y3 : Item Price - scaled
The price of the selected product.

CSC ServiceWorks – Ex. 1008
Page 122 of 270

Y4-Y5 : Item Number
The item number of the selected product. This number is defined by the manufacturer, and set to FFFFh for undefined or not implemented.

Reader response:

Vend Approved (05H) Z1	Vend Amount Z2-Z3

Z1 : VEND APPROVED
Allow the selected product to be dispensed.

Z2-Z3 : Vend Amount - scaled
This is the amount deducted from the user's payment media or account. This may not match the amount specified in the VEND REQUEST command; it may be surcharged or discounted.
FFFFh - an electronic token was used.

NOTE: The VMC must use Vend Amount to update the credit on the screen. The Reader must fill this field with the used amount for the transaction.

Vend Denied (06H) Z1

Z1 : VEND DENIED
Approval denied for the patron's selection. Do not dispense any products.

Vend (13H / 63H)	Vend Request (00H) Y1	Item Price Y2-Y5	Item Number Y6-Y7

Level 03 (EXPANDED CURRENCY MODE) Readers

Y1 : VEND REQUEST
The patron has made a selection. The VMC is requesting vend approval from the payment media reader before dispensing the product.

Y2-Y5 : Item Price – scaled
The price of the selected product.

Y6-Y7 : Item Number
The item number of the selected product. This number is defined by the

CSC ServiceWorks – Ex. 1008
Page 123 of 270

manufacturer, and set to FFFFh for undefined or not implemented.

Reader Response:

Vend Approved (05H) Z1	Vend Amount Z2-Z5

Level 03 (EXPANDED CURRENCY MODE) Readers

Z1 : VEND APPROVED
Allow the selected product to be dispensed.

Z2-Z5 : Vend Amount - scaled
This is the amount deducted from the user's payment media or account. This may not match the amount specified in the VEND REQUEST command; it may be surcharged or discounted.
FFFFFFFFh - an electronic token was used.

NOTE: The VMC must use Vend Amount to update the credit on the screen. The Reader must fill this field with the used amount for the transaction.

CSC ServiceWorks – Ex. 1008
Page 124 of 270

7.4.6 VEND - Cancel

Vend (13H / 63H)	Vend Cancel (01H) Y1

Y1 : VEND CANCEL
This command can be issued by the VMC to cancel a VEND REQUEST command before a VEND APPROVED/DENIED has been sent by the payment media reader. The payment media reader will respond to VEND CANCEL with a VEND DENIED and return to the Session Idle state.

Reader response:

Vend Denied (06H) Z1

See paragraph 7.4.5 for explanation.

7.4.7 VEND - Success

Vend (13H / 63H)	Vend Success (02H) Y1	Item Number Y2-Y3

Y1 : VEND SUCCESS
The selected product has been successfully dispensed.

Y2-Y3 : Item number
The item number of the selected product. This number is defined by the manufacturer, and set to FFFFh for undefined or not implemented.

NOTE A reset between VEND APPROVED and VEND SUCCESS shall be interpreted as a VEND SUCCESS.

Reader response:

No Data response

CSC ServiceWorks – Ex. 1008
Page 125 of 270

7.4.8 VEND - Failure

Vend (13H / 63H)	Vend Failure (03H) Y1

Y1 : VEND FAILURE
A vend has been attempted at the VMC but a problem has been detected and the vend has failed. The product was not dispensed. Funds should be refunded to user's account.

Reader response:

No Data response

Vend failure sequence

In order to ensure that a reader refunds after a Vend Failure command, the VMC must send at least a single Poll command to obtain the reader possible answers:

ACK	Refund Complete
MALFUNCTION ERROR code 1100yyyy	Refund error-internal reader credit lost
SILENCE	Refund in progress. VMC must repoll reader until ACK or Malfunction error answer for maximum NON Response time.

7.4.9 SESSION COMPLETE

Vend (13H / 63H)	Session Complete (04H) Y1

Y1 : SESSION COMPLETE
This tells the payment media reader that the session is complete and to return to the Enabled state. SESSION COMPLETE is part of a command/response sequence that requires an END SESSION response from the reader.

Reader response:

End Session (07H) Z1

Z1 : END SESSION
This command is issued in response to a SESSION COMPLETE command. The

CSC ServiceWorks – Ex. 1008
Page 126 of 270

END SESSION response indicates the reader has returned to the Enabled state. If "END SESSION" is not received by the VMC within a the maximum application non-response time, the VMC must issue a "RESET" command.

7.4.10 CASH SALE

Vend (13H / 63H)	Cash Sale (05H) Y1	Item Price Y2-Y3	Item Number Y4-Y5

Level 01 / 02 / 03 Readers

Y1 : CASH SALE
A cash sale (cash only or cash and cashless) has been successfully completed by the VMC.

Y2-Y3 : Item Price – scaled
The price of the selected product or cash portion of the price.

Y4-Y5 : Item Number
The item number of the selected product. This number is defined by the manufacturer, and set to FFFFh for undefined or not implemented.

Note: This command is issued for cash auditing applications and is sent to the payment media reader if the SETUP/CONFIGURATION bit (b3) is enabled anytime a valid cash transaction is completed via a coin mechanism or bill validator.

Reader response:

No Data response

Vend (13H)	Cash Sale (05H) Y1	Item Price Y2-Y5	Item Number Y6-Y7	Item Currency Y8-Y9

Level 03 (EXPANDED CURRENCY MODE) Readers

Y1 : **CASH SALE**
A cash sale (cash only or cash and cashless) has been successfully completed by the VMC.

CSC ServiceWorks – Ex. 1008
Page 127 of 270

Y2-Y5 : Item Price – scaled
The price of the selected product or cash portion of the price.

Y6-Y7 : Item Number
The item number of the selected product. This number is defined by the manufacturer, and set to FFFFh for undefined or not implemented.

Y8-Y9 : Item Currency
The currency for the item price used during the vend. This value may be converted within the reader to the readers balancing currency. The item currency is sent using the numeric code as defined in ISO 4217 (see Appendix A1). The value is configured as packed BCD with the leading digit a 1 (one). For example, the code for the US dollar would be 1840 (Z10 = 18 and Z11 = 40). and for the Euro is 1978 (Z10 = 19 and Z11 = 78).

Note: This command is issued for cash auditing applications and is sent to the payment media reader if the SETUP/CONFIGURATION bit (b3) is enabled anytime a valid cash transaction is completed via a coin mechanism or bill validator.

Reader response:

No Data response

7.4.11 Negative Vend Request

Vend (13H / 63H)	Neg.Vend Request (06H) Y1	Item Value Y2-Y3	Item Number Y4-Y5

Level 03 Reader

Y1 : NEGATIVE VEND REQUEST
The patron has inserted an item. The VMC is requesting negative vend approval from the payment media reader before accepting the returned product.

Y2-Y3 : Item value – scaled
The value of the inserted product (16 Bit).

Y4-Y5 : Item Number
The item number of the inserted product. This number is defined by the manufacturer, and set to FFFFh for undefined or not implemented.

CSC ServiceWorks – Ex. 1008
Page 128 of 270

Reader response:

Vend Approved (05H) Z1	Vend Amount Z2-Z3

Level 03 (EXPANDED CURRENCY MODE disabled) Readers

Z1 : VEND APPROVED
Allow the returned product to be accepted, i.e. this means, the reader will be able to credit the value to the patrons card, when a vend success will follow the approved.

Z2-Z3 : Vend Amount – scaled
This is the amount of credit, which will be added to the user's payment media or account. This may not match the amount specified in the NEGATIVE VEND REQUEST command; it may be surcharged or discounted.
FFFFh - an electronic token will be credited.

Vend (13H / 63H)	Neg.Vend Request (06H) Y1	Item Value Y2-Y5	Item Number Y6-Y7

Level 03 (EXPANDED CURRENCY MODE) Readers

Y1 : NEGATIVE VEND REQUEST
The patron has inserted an item. The VMC is requesting negative vend approval from the payment media reader before accepting the returned product.

Y2-Y5 : Item value – scaled
The value of the inserted product.

Y6-Y7 : Item Number
The item number of the inserted product. This number is defined by the manufacturer, and set to FFFFh for undefined or not implemented.

Reader response:

CSC ServiceWorks – Ex. 1008
Page 129 of 270

Vend Approved (05H) Z1	Vend Amount Z2-Z5

Level 03 (EXPANDED CURRENCY MODE) Readers

Z1 : VEND APPROVED
Allow the returned product to be accepted, i.e. this means, the reader will be able to credit the value to the patrons card, when a vend success will follow the approved.

Z2-Z5 : Vend Amount – scaled
This is the amount of credit, which will be added to the user's payment media or account. This may not match the amount specified in the NEGATIVE VEND REQUEST command; it may be surcharged or discounted.

FFFFFFFFh - an electronic token will be credited.

Vend Denied (06H) Z1

Z1 : VEND DENIED
Approval denied for the returned product. Do not accept the product or return it if possible.

Note: This command is used in the uninterruptable vend sequence like the normal REQUEST VEND and is followed by the normal responses VEND APPROVED or VEND DENIED, for the reader to confirm the credit update possibility and the final VEND SUCCESS or VEND FAILURE command to update the patron's credit.

Designers of cashless devices must pay special attention in implementing this command, especially for non locking readers. Credit should only be generated on the media upon final reception of VEND SUCCESS to avoid unwanted credit in the system.

CSC ServiceWorks – Ex. 1008
Page 130 of 270

Designers of both the VMC and the readers have to deal with fault conditions of such a system carefully. A normal sequence description is added to the example vend sessions with hints to different application features.

CSC ServiceWorks – Ex. 1008
Page 131 of 270

7.4.12 READER - Disable

Reader (14H / 64H)	Disable (00H) Y1

Y1 : READER DISABLE
This informs the payment media reader that it has been disabled, i.e. it should no longer accept a patron's payment media for the purpose of vending. Vending activities may be re-enabled using the READER ENABLE command. The payment media reader should retain all SETUP information.

NOTE Any transaction in progress will not be affected and should continue to its normal completion.

Reader response:

No Data response

7.4.13 READER - Enable

Reader (14H / 64H)	Enable (01H) Y1

Y1 : READER ENABLE
This informs the payment media reader that is has been enabled, i.e. it should now accept a patron's payment media for vending purposes. This command must be issued to a reader in the Disabled state to enable vending operations.

Reader response:

No Data response

CSC ServiceWorks – Ex. 1008
Page 132 of 270

7.4.14 READER - Cancel

Reader (14H / 64H)	Cancel (02H) Y1

Y1 : READER CANCEL
This command is issued to abort payment media reader activities which occur in the Enabled state. It is the first part of a command/response sequence which requires a CANCELLED response from the reader.

Reader response:

Cancelled (08H) Z1

Z1 : CANCELLED
This is the reader's response to the READER CANCEL command from the VMC. This command comprises a command/response sequence. Its use is only appropriate in the Enabled state.

7.4.15 DATA ENTRY – Response (Key Entries)

The purpose of the overall Data Entry request / response sequence is to allow the machine user to enter data (i.e., a card validation number) using the selection buttons on the vending machine.

The DATA ENTRY request / response sequence can occur in the Enabled state only. It is the responsibility of the reader to enforce this rule.

Depending on the type of data being entered, it is a higher level system decision on whether or not the data is displayed on either the vending machine or card reader. If the data is not displayed (a recommendation for certain types of sensitive data) the vending machine or card reader display can still be optionally used to indicate a prompt and/or representation of the data entered for user feedback (i.e., asterisks *****). **Please see additional information on the vending machine's display usage for Data Entry in the DATA ENTRY REQUEST Response (12H) description in the 7.4.4 POLL section.**

The DATA ENTRY RESPONSE key entries are sent to the reader as they are pressed.

Depending on the user's speed of entry and vending machine controller cycle time, the data may

CSC ServiceWorks – Ex. 1008
Page 133 of 270

be sent either as a digit at a time, a sub group of digits, or the entire length of digits as specified in the Z2 Data Entry Length byte in the DATA ENTRY REQUEST response. For example, if the Data Entry Length is 6 digits, but only 2 are initially (and quickly) entered, the vending machine controller will send the 2 that are available via the DATA ENTRY RESPONSE Y2-Y9 command. The balance will be sent via other DATA ENTRY RESPONSE Y2-Y9 commands when available.

It is up to the reader to merge the received DATA ENTRY RESPONSE data and optionally update the display as required. The session is ended after the VMC sends the final DATA ENTRY RESPONSE data (no SESSION COMPLETE command is required). Note that the VMC display will remain available to the reader for the amount of time requested in the previous DISPLAY REQUEST response.

If the data entry process is cancelled by the VMC for any reason, the VMC will send the DATA ENTRY RESPONSE with all data bytes (Y2-Y9) set to FFh. This will terminate the DATA ENTRY REQUEST and return the reader to the Enabled state.

For ease of command message processing, the Data Entry Data has been fixed at 8 characters (Y2-Y9). Unused bytes must be sent as 00h to pad out the entire command to byte Y9.

Reader (14H / 64H)	Data Entry Response (03H) Y1	Data Entry Data Y2-Y9

Level 03 Readers (if option enabled)

Y1 : DATA ENTRY RESPONSE
The VMC is providing a DATA ENTRY RESPONSE to the reader.

Y2-Y9 : DATA ENTRY DATA
Data should be in ASCII, one character per byte. Data should be left justified (first character / key in Y2, second in Y3, etc.). The number of data bytes must equal eight (8) and unused data bytes must be sent as 00h.

If the data entry process is cancelled by the VMC for any reason, the VMC will send this message with all DATA ENTRY data bytes set to FFh.

CSC ServiceWorks – Ex. 1008
Page 134 of 270

Note: The reader must translate the VMC key information into the appropriate key needed for the application

Reader response:

No Data response

Note: If the reader has additional display information to send to the VMC following the DATA ENTRY RESPONSE, it should send it via a DISPLAY REQUEST response to one of the next POLL commands from the VMC.

CSC ServiceWorks – Ex. 1008
Page 135 of 270

7.4.16 REVALUE - Request (Level 02 / 03 Readers)

Revalue (15H / 65H)	Revalue Request (00H) Y1	Revalue Amount Y2-Y3

Level 02 / 03 Readers

Y1 : REVALUE REQUEST (Level 02 Readers)
A balance in the VMC account because coins or bills were accepted or some balance is left after a vend. With this command the VMC tries to transfer the balance to the payment media.

Y2-Y3 : Revalue amount - scaled.
The revalue amount should not exceed the revalue limit value given by the command REVALUE LIMIT REQUEST.

Revalue (15H / 65H)	Revalue Request (00H) Y1	Revalue Amount Y2-Y5

Level 03 (EXPANDED CURRENCY MODE) Readers

Y1 : REVALUE REQUEST (Level 03 Readers)
A balance in the VMC account because coins or bills were accepted or some balance is left after a vend. With this command the VMC tries to transfer the balance to the payment media.

Y2-Y5 : Revalue Amount - scaled.
The revalue amount should not exceed the revalue limit value given by the command REVALUE LIMIT REQUEST.

Reader response:

Revalue Approved (0DH) Z1

Level 02 / 03 Readers

Z1 : REVALUE APPROVED (Level 02 / 03 Readers)
A balance is in the VMC account because coins or bills were accepted or some balance is left after a vend. The VMC has issued a REVALUE REQUEST to the payment media reader to transfer the balance to the payment media. The payment media reader accepted the request and added its value to the payment media balance. The reader then responds with a REVALUE APPROVED, so the VMC

CSC ServiceWorks – Ex. 1008
Page 136 of 270

may clear the account.

Revalue Denied (0EH) Z1

Level 02 Readers

Z1 : REVALUE DENIED (Level 02 / 03 Readers)
A balance is in the VMC account because coins or bills were accepted or some balance is left after a vend. The VMC has issued a REVALUE REQUEST to the payment media reader to transfer the balance to the payment media. The payment media reader does not accept the request and responds with a REVALUE DENIED, so the VMC has to pay out change. It is a quite common situation if there is no payment media inserted at this moment.

7.4.17 REVALUE - Limit Request (Level 02 / 03 Readers)

Revalue (15H / 65H)	Revalue Limit Request (01H) Y1

Level 02 / 03 Readers

Note: If revaluing, follow the BEGIN SESSION with this command.

Y1 : REVALUE LIMIT REQUEST (Level 02 Readers)
In a configuration with a bill and/or coin acceptor and payment media reader connected to a VMC, the VMC must know the maximum amount the payment media reader eventually will accept by a REVALUE REQUEST. Especially if the bill acceptor accepts a wide range of bills. Otherwise the VMC may be confronted by the situation where it accepted a high value bill and is unable to pay back cash or revalue it to a payment media. (see also below)

Reader response:

Revalue Limit Amount (0FH) Z1	Revalue Limit Amount Z2-Z3

Level 02 / 03 (EXPANDED CURRENCY MODE disabled) Readers

Z1 : REVALUE LIMIT AMOUNT (Level 02 / 03 Readers)

CSC ServiceWorks – Ex. 1008
Page 137 of 270

The patron intends to revalue the payment media with a bill of some value. The VMC must know what kind of bills to accept, so it will issue a REVALUE LIMIT REQUEST to get the amount the payment media reader will accept. The payment media reader will respond with the scaled value, calculated with the maximum allowed payment media balance minus the current balance of the payment media. The payment media reader responds with REVALUE DENIED if there is no payment media available upon this request.

Z2-Z3 : Revalue limit value - scaled.

Reader response:

Revalue Limit Amount (0FH) Z1	Revalue Limit Amount Z2-Z5

Level 03 (EXPANDED CURRENCY MODE) Readers

Z1 : REVALUE LIMIT AMOUNT (Level 03 Readers)
The patron intends to revalue the payment media with a bill of some value. The VMC must know what kind of bills to accept, so it will issue a REVALUE LIMIT REQUEST to get the amount the payment media reader will accept. The payment media reader will respond with the scaled value, calculated with the maximum allowed payment media balance minus the current balance of the payment media. The payment media reader responds with REVALUE DENIED if there is no payment media available upon this request.

Z2-Z5 : Revalue Limit Value - scaled.

7.4.18 EXPANSION - Request ID

Expansion (17H / 67H)	Request ID (00H) Y1	Manufacturer Code Y2-Y4	Serial Number Y5-Y16	Model Number Y17-Y28	Software Version Y29-Y30

Y1 : REQUEST ID
The VMC is requesting payment media reader identification information. The information included above (Y2-Y30) provides the payment media reader with VMC identification information.

Y2-Y4 : Manufacturer Code - ASCII
Identification code for the equipment supplier. Currently defined codes are listed in the EVA document entitled “The Data Transfer Standard EVA-DTS" document, the Audit Data Dictionary section, chapter 4,

"Manufacturer Codes".

Y5-Y16 : Serial Number - ASCII
Factory assigned serial number.

Y17-Y28 : Model Number - ASCII
Manufacturer assigned model number.

Y29-Y30 : Software Version - packed BCD
Current software version.

Reader response:

Peripheral ID (09H) Z1	Manufacture Code Z2-Z4	Serial Number Z5-Z16	Model Number Z17-Z28	Software Version Z29-Z30

Level 01 / 02 / 03 Readers (If VMC indicates Level 01 or 02)

Peripheral ID (09H) Z1	Manufacture Code Z2-Z4	Serial Number Z5-Z16	Model Number Z17-Z28	Software Version Z29-Z30	Optional Feature Bits Z31-Z34

Level 03 Readers (If VMC indicates Level 03)
See paragraph 7.4.4 for a detailed explanation of this response.

7.4.19 EXPANSION - Read User File (Level 02 Readers)

Obsolete Command – Do not use for new designs!! (Use EXPANSION - Diagnostics)

Expansion (17H / 67H)	Read User File (01H) Y1	Number of User File Y2

Level 02 Readers

Y1= READ USER FILE
The VMC request's the user file. The length of the file is variable with a maximum length of 32 bytes. The contents of the data are defined by the VMC manufacturer. If the payment media reader does support this command it will respond with USER FILE DATA.

Y2= Number of User File.
The File identification number. The number and size of the data files are defined

by the payment media reader manufacturer. The maximum number of user files are FFh.

Reader response:

User Data File (10H) Z1	Number of User File Z2	Length of User File Z3	User Data Z4-Zn

Z1 : USER FILE DATA (only level 02 readers)
The VMC requires user data and has issued a EXPANSION - READ USER FILE to the payment media reader.

Z2 : Number of User File.
The File identification number. The number and size of data files are defined by the payment media reader manufacturer. The maximum number of user files are FFh.

Z3 : Length of user file
The length of the user file. The maximum length of the user file is 32 bytes. If the user file don't exists the length will be set to 00h.

Z4-Zn : Data defined by the VMC manufacturer.

7.4.20 EXPANSION - Write User File (Level 02 Readers)

Obsolete Command – Do not use for new designs!! (Use EXPANSION - Diagnostics)

Expansion (17H / 67H)	Write User File (02H) Y1	Number of User File Y2	Length of User File Y3	User Data Y4-Yn

Y1 : WRITE USER FILE
The VMC request's to write the user file. The length of the file is variable with a maximum length of 32 bytes. The contents of the data are defined by the VMC manufacturer. If the command is supported but the payment media reader is unable to write the payment media (writing problem or data too long) it will respond with MALFUNCTION/ERROR.

Y2 : Number of User File.
The File identification number. The number and size of data files are defined by the payment media reader manufacturer. The maximum number of user files are FFh.

Y3 : Length of user file

CSC ServiceWorks – Ex. 1008
Page 140 of 270

The length of the user file. The maximum length of the user file is 32 bytes.

Y4-Yn : Data defined by the VMC manufacturer.

Reader response:

No Data response

7.4.21 EXPANSION - Write Time/Date File (Level 02/03 readers)

Expansion (17H / 67H)	Write Time/ Date File (03H) Y1	Time Date Y2-Y11

Y1 : WRITE TIME/DATE FILE
The VMC requests to write the Time/Date file.

Y2- Y11: Time/Date to synchronize the card reader real time clock. The date bytes are BCD encoded.

Y2 = Years (Range: 00..99)
Y3 = Months (Range: 01..12)
Y4 = Days (Range: 01..31)
Y5 = Hours (Range: 00..23)
Y6 = Minutes (Range: 00..59)
Y7 = Seconds (Range: 00..59)
Y8 = Day of Week (Range: 01..07, Monday = 1..Sunday = 7)
Y9 = Week Number (Range: 01..53)
Y10 = Summertime (Range: 00..01, Summertime = 1)
Y11 = Holiday (Range: 00..01, Holiday = 1)

If any item of the time/date is not supported use FFH instead.

7.4.22 EXPANSION – Enable Options (Level 03 readers)

Expansion (17H / 67H)	Optional Feature Bit Enable (04H) Y1	Optional Feature Bits Y2-Y5

Level 03 Readers

Y1 : OPTIONAL FEATURE BIT ENABLE
The VMC can enable which level 3 features it desires.

Y2 - Y5: Individual expanded feature bits as sent by reader in response to the 17H-00H

EXPANSION REQUEST ID command. To enable a feature, a bit is set to one.

CSC ServiceWorks – Ex. 1008
Page 141 of 270

Bits should be sent in descending order, i.e. bit 31 is sent first and bit 0 is sent last. **All features are disabled after a reset**.

b0 - File Transport Layer supported
b1 - 0 = 16 bit monetary format, 1 = 32 bit monetary format
b2 - multi currency / multi lingual
b3 - negative vend
b4 - data entry
b5 to b31 not used (should be set to 0)

Note: If 32 bit monetary format (b1) and or multi currency / multi lingual (b2) options are enabled, this condition will be known as **EXPANDED CURRENCY MODE** in the rest of the document.

7.4.23 EXPANSION – FTL REQ TO RCV

Expansion (17H / 67H)	FTL (FAH) Y1	REQ TO RCV Y2-Y6

Level 03 Readers (if File Transport Layer option enabled)

The VMC is requesting to receive data from the reader whose destination address will always be 10H or 60H. Note that all FTL Commands / Responses are defined in Section 2.6.

Y1 : **FTL** REQ TO RCV
The VMC is requesting to receive data from the reader.

Y2 : **FTL** Destination Address (Reader = 10H / 60H as defined in Section 2.6.

Y3 : **FTL** Source Address
The source address of the command as defined in Section 2.6.

Y4 : **FTL** File ID
The type of information desired as defined in Section 2.6.

Y5 : **FTL** Maximum Length
The total number of blocks in the file as defined in Section 2.6.

Y6 : **FTL** Control
Data transfer control information as defined in Section 2.6.

Reader response:

CSC ServiceWorks – Ex. 1008
Page 142 of 270

Two responses are possible from the reader, either the SEND BLOCK (1DH) which transmits the initial (or only) part of the data or the RETRY / DENY (1CH). Note that the response can either be immediate or delayed.

FTL (1DH) SEND BLOCK Z1	SEND BLOCK Information Z2-Z34

Z1 : 1DH response which indicates SEND BLOCK

Z2 : Destination address of data as defined in Section 2.6

Z3 : Block # of data as defined in Section 2.6

Z4-Z34: Data (maximum of 31 bytes)

or

FTL (1CH) RETRY / DENY Z1	RETRY / DENY Information Z2-Z4

Z1 : 1CH response which indicates RETRY / DENY

Z2 : Destination address of response as defined in Section 2.6

Z3 : Source address of response (10H / 60H) as defined in Section 2.6

Z4 : Retry delay

7.4.24 EXPANSION – FTL RETRY / DENY

Expansion (17H)	FTL (FBH) Y1	RETRY / DENY Y2-Y4

Level 03 Readers (if File Transport Layer option enabled)

The VMC is retrying, denying, or aborting a data transfer to/from the reader whose destination address will always be 10H or 60H. Note that all FTL Commands / Responses are defined in Section 2.6.

Y1 : **FTL** RETRY / DENY

CSC ServiceWorks – Ex. 1008
Page 143 of 270

The VMC is requesting to retry, deny, or abort a data transfer.

Y2 : **FTL** Destination Address (Reader = 10H / 60H)
The destination address of the command as defined in Section 2.6.

Y3 : **FTL** Source Address
The source address of the command as defined in Section 2.6.

Y4 : **FTL** Retry Delay
The time delay required of the sender as defined in Section 2.6.

Reader response:

None

7.4.25 EXPANSION – FTL SEND BLOCK

Expansion (17H / 67H)	FTL (FCH) Y1	SEND BLOCK Y2-Y34

Level 03 Readers (if File Transport Layer option enabled)

The VMC is sending data to the reader whose destination address will always be 10H or 60H. Note that all FTL Commands / Responses are defined in Section 2.6.

Y1 : **FTL** SEND BLOCK
The VMC is requesting to send data.

Y2 : **FTL** Destination Address (Reader = 10H / 60H)
The destination address of the command / data as defined in Section 2.6.

Y3 : **FTL** Block #
The block # of data as defined in Section 2.6

Y4-Y34 **FTL** Data (maximum of 31 bytes)
The actual data block as defined in Section 2.6.

Reader response:

None

7.4.26 EXPANSION – FTL OK TO SEND

Expansion	FTL	OK TO SEND

CSC ServiceWorks – Ex. 1008
Page 144 of 270

(17H / 67H)	(FDH) Y1	 Y2-Y3

Level 03 Readers (if File Transport Layer option enabled)

The VMC is indicating that it is OK for the reader to transfer data. The destination address will always be the reader 10H or 60H. Note that all FTL Commands / Responses are defined in Section 2.6.

Y1 : **FTL** OK TO SEND
The VMC is indicating it is OK to send data.

Y2 : **FTL** Destination Address (Reader = 10H / 60H)
The destination address of the command / data as defined in Section 2.6.

Y3 : **FTL** Source Address
The source address of the command as defined in Section 2.6.

Reader response:

One response is possible from the reader which transmits the initial (or only) part of the data.

Note that the response can either be immediate or delayed.

FTL (1DH) SEND BLOCK Z1	SEND BLOCK Information Z2-Z34

Z1 : 1DH response which indicates SEND BLOCK

Z2 : Destination address of data as defined in Section 2.6

Z3 : Block # of data as defined in Section 2.6

Z4-Z34: Data (maximum of 31 bytes)

7.4.27 EXPANSION – FTL REQ TO SEND

Expansion (17H / 67H)	FTL (FEH) Y1	REQ TO SEND Y2-Y6

Level 03 Readers (if File Transport Layer option enabled)

CSC ServiceWorks – Ex. 1008
Page 145 of 270

The VMC is requesting to send data to the reader whose destination address will always be 10H or 60H. Note that all FTL Commands / Responses are defined in Section 2.6.

Y1 : **FTL** REQ TO SEND
The VMC is requesting to send data to the reader.

Y2 : **FTL** Destination Address (Reader = 10H / 60H)
The destination address of the command as defined in Section 2.6.

Y3 : **FTL** Source Address
The source address of the command as defined in Section 2.6.

Y4 : **FTL** File ID
The type of information desired as defined in Section 2.6.

Y5 : **FTL** Maximum Length
The total number of blocks in the file as defined in Section 2.6.

Y6 : **FTL** Control
Data transfer control information as defined in Section 2.6.

Reader response:

Two responses are possible from the reader, either the OK TO SEND (1EH) which allows the data transfer to start or the RETRY / DENY (1CH). Note that the response can either be immediate or delayed.

FTL (1EH) OK TO SEND Z1	OK TO SEND Information Z2-Z3

Z1 : 1EH response which indicates OK TO SEND

Z2 : Destination address of response as defined in Section 2.6

Z3 : Source address of response (10H / 60H) as defined in Section 2.6

or

CSC ServiceWorks – Ex. 1008
Page 146 of 270

FTL (1CH) RETRY / DENY Z1	RETRY / DENY Information Z2-Z4

Z1 : 1CH response which indicates RETRY / DENY

Z2 : Destination address of response as defined in Section 2.6

Z3 : Source address of response (10H / 60H) as defined in Section 2.6

Z4 : Retry delay

7.4.28 EXPANSION - Diagnostics

Expansion (17H / 67H)	Diagnostics (FFH) Y1	User Defined Data Y2-Yn

Y1 : DIAGNOSTICS.
Device manufacturer specific instruction for implementing various manufacturing or test modes.

Y2-Yn : User Defined Data.
The data portion of this command is defined by the manufacturer and is not part of this document.

Reader response:

Diagnostics Response (FFH) Z1	User Defined Z2-Zn

Z1 : DIAGNOSTICS RESPONSE

Z2-Zn : User Defined Data.
The data portion of this response is defined by the manufacturer and is not part of this document.

CSC ServiceWorks – Ex. 1008
Page 147 of 270

7.5 Cashless Device Non-Response Time

The default maximum non-response time for a cashless device is 5 seconds. This is the maximum time for which a cashless device will not respond to a command or a POLL with ACK, NAK or a message. The "Application Maximum Response Time" reported in byte Z7 of the Reader Configuration Data (7.4.2) supersedes this default value if Z7 is greater.

7.6 Cashless Device Power Requirements

The current draw for any cashless device must fall within the following limits. All measurements are at the minimum VMC Voltage Output.

Idle mode = 300 mA. (avg.) continuous

Transport or Read/Write cycle = 1.5 A @ 50% maximum duty cycle up to 5 seconds.

CSC ServiceWorks – Ex. 1008
Page 148 of 270

7.7 Example Vend Sessions

EXAMPLE VEND SESSION #1
(Valid Single Vend)

Controller		Cashless Device	State
POLL	→		
	←	BEGIN SESSION	(Session Idle)
ACK	→		
VEND REQUEST	→		
	←	ACK	(Vend)
POLL	→		
	←	VEND APPROVED	
ACK	→		
VEND SUCCESS	→		
	←	ACK	(Session Idle)
SESSION COMPLETE	→		
	←	ACK	
POLL	→		
	←	END SESSION	(Enabled)

CSC ServiceWorks – Ex. 1008
Page 149 of 270

EXAMPLE VEND SESSION #2
(Valid Multiple Vend)

Controller		Cashless Device	State
POLL	→		
	←	BEGIN SESSION	(Session Idle)
ACK	→		
VEND REQUEST	→		
	←	ACK	(Vend)
POLL	→		
	←	VEND APPROVED	
ACK	→		
VEND SUCCESS	→		
	←	ACK	(Session Idle)
VEND REQUEST	→		
	←	ACK	(Vend)
POLL	→		
	←	VEND APPROVED	
ACK	→		
VEND SUCCESS	→		
	←	ACK	(Session Idle)
SESSION COMPLETE	→		
	←	ACK	
POLL	→		
	←	END SESSION	(Enabled)

CSC ServiceWorks – Ex. 1008
Page 150 of 270

EXAMPLE VEND SESSION #3
(Session cancelled by user with reader return button)

Controller		Cashless Device	State
POLL	→		
	←	BEGIN SESSION	(Session Idle)
ACK	→		
User pushes reader RETURN button			
POLL	→		
	←	SESSION CANCEL	
ACK	→		
SESSION COMPLETE	→		
	←	ACK	
POLL	→		
	←	END SESSION	(Enabled)

CSC ServiceWorks – Ex. 1008
Page 151 of 270

EXAMPLE VEND SESSION #4a
(Session cancelled by user via coin mechanism escrow return button before product was selected)

Controller		Cashless Device	State
POLL	→		
	←	BEGIN SESSION	(Session Idle)
ACK	→		
User pushes coin mech. escrow return			
SESSION COMPLETE	→		
	←	ACK	
POLL	→		
	←	END SESSION	(Enabled)

CSC ServiceWorks – Ex. 1008
Page 152 of 270

EXAMPLE VEND SESSION #4b
(Session cancelled by user via coin mechanism escrow return button after product was selected)

Controller		Cashless Device	State
POLL	→		
	←	BEGIN SESSION	(Session Idle)
ACK	→		
VEND REQUEST	→		
	←	ACK	(Vend)
User pushes coin mech. escrow return			
CANCEL VEND	→		
	←	ACK	
POLL	→		
	←	VEND DENIED	(Session Idle)
SESSION COMPLETE	→		
	←	ACK	
POLL	→		
	←	END SESSION	(Enabled)

CSC ServiceWorks – Ex. 1008
Page 153 of 270

EXAMPLE VEND SESSION #5
(VMC Failure/product not dispensed
Refund positive)

Controller		Cashless Device	State
POLL	→		
	←	BEGIN SESSION	(Session Idle)
ACK	→		
VEND REQUEST	→		
	←	ACK	(Vend)
Reader deducts purchase price from payment media			
POLL	→		
	←	VEND APPROVED	
VMC fails to dispense product			
VEND FAILURE	→		
	←	ACK	
POLL	→		
	←	Silence during the refund operation	
POLL	→		
	←	ACK	C
SESSION COMPLETE	→		
	←	ACK	
POLL	→		
	←	END SESSION	(Enabled)

CSC ServiceWorks – Ex. 1008
Page 154 of 270

EXAMPLE VEND SESSION #5A
(VMC Failure/product not dispensed
Refund fail)

Controller		Cashless Device	State
POLL	→		
	←	BEGIN SESSION	(Session Idle)
ACK	→		
VEND REQUEST	→		
	←	ACK	(Vend)
Reader deducts purchase price from payment media			
POLL	→		
	←	VEND APPROVED	
VMC fails to dispense product			
VEND FAILURE	→		
	←	ACK	
POLL	→		
	←	Silence during the refund operation	
POLL	→		
	←	MALFUNCTION ERROR code 1100yyyy=refund fail	(Level 02 / 03)
		ACK	(Level 01)
SESSION COMPLETE	→		
	←	ACK	
POLL	→		
	←	END SESSION	(Enabled)

CSC ServiceWorks – Ex. 1008
Page 155 of 270

EXAMPLE VEND SESSION #6
(Vend denied by reader)

Controller		Cashless Device	State
POLL	→		
	←	BEGIN SESSION	(Session Idle)
ACK	→		
VEND REQUEST	→		
	←	ACK	(Vend)

Insufficient funds or payment media/account error

POLL	→		
	←	VEND DENIED	(Session Idle)

VMC makes no attempt to dispense product

SESSION COMPLETE	→		
	←	ACK	
POLL	→		
	←	END SESSION	(Enabled)

CSC ServiceWorks – Ex. 1008
Page 156 of 270

EXAMPLE VEND SESSION #7
(Command Out of Sequence Error)

Controller		Cashless Device	State
POLL	→		
	←	BEGIN SESSION	(Session Idle)
ACK	→		
VEND REQUEST	→		
	←	ACK	(Vend)
EXPANSION ID REQUEST	→		
	←	ACK	
POLL	→		
	←	COMMAND OUT OF SEQUENCE	(Session Idle)
ACK	→		
RESET	→	{**Mandatory**}	
	←	ACK	
			(Inactive)

CSC ServiceWorks – Ex. 1008
Page 157 of 270

EXAMPLE VEND SESSION #8a
(Reader busy for longer than max. non response time)

Controller		Cashless Device	State
POLL	→		
	←	BEGIN SESSION	(Session Idle)
ACK	→		
VEND REQUEST	→		
	←	ACK	(Vend)
POLL	→		
		[silence…]	(Reader busy)
POLLs (numerous)	→		
	←	[silence…]	(continued POLLs w/ no response)
POLL	→		
	←	ACK	(restart Non-Response timer)
POLLs (numerous)	→		
	←	[silence…]	(continued POLLs w/ no response)
POLL	→		
	←	[silence…]	(Reader almost finished)
POLL	→		
	←	VEND APPROVED	(Reader ready)
ACK	→		
VEND SUCCESS	→		
	←	ACK	(Session Idle)
VEND REQUEST	→		
	←	ACK	(Vend)
POLL	→		
	←	VEND APPROVED	
ACK	→		
VEND SUCCESS	→		
	←	ACK	(Session Idle)
SESSION COMPLETE	→		
	←	ACK	
POLL	→		
	←	END SESSION	(Enabled)

CSC ServiceWorks – Ex. 1008
Page 158 of 270

EXAMPLE VEND SESSION #8b
(Reader busy for shorter than max. non response time)

Controller		Cashless Device	State
POLL	→		
	←	BEGIN SESSION	(Session Idle)
ACK	→		
VEND REQUEST	→		
	←	ACK	(Vend)
POLL	→		
	←	[silence...]	(Reader busy)
POLLs (numerous)	→		
	←	[silence...]	(Continued POLLs w/ no response)
POLL	→		
	←	[silence...]	(Reader almost finished)
POLL	→		
	←	VEND APPROVED	(Reader ready)
ACK	→		
VEND SUCCESS	→		
	←	ACK	(Session Idle)
VEND REQUEST	→		
	←	ACK	(Vend)
POLL	→		
	←	VEND APPROVED	
ACK	→		
VEND SUCCESS	→		
	←	ACK	(Session Idle)
SESSION COMPLETE	→		
	←	ACK	
POLL	→		
	←	END SESSION	(Enabled)

NOTE

If the peripheral omits to respond within the maximum non-response time, it is considered to be off-line.

CSC ServiceWorks – Ex. 1008
Page 159 of 270

EXAMPLE VEND SESSION #8c
(No Response, Reader busy at Vend Request.)

Controller		Cashless Device	State/ Comment
POLL	→		
	←	BEGIN SESSION	
ACK	→		
VEND REQUEST	→		
	←	[silence…]	Reader busy. The reader may not send the response within the t-response(max) timeout or hasn't received the command completely due to line breakdown
VEND REQUEST	→		VMC repeats the command: As the VMC isn't sure, that the slave has received the command free of errors it repeats it. The command itself is not yet performed by the reader as long the ACK hasn't been sent.
	←	[silence…]	Reader busy
VEND REQUEST	→		
	←	ACK	(Vend) The reader will now perform the command. The response isn't available at the moment, thus the VEND REQUEST is only acked
POLL (numerous)	→		VMC polls the reader to obtain the data in VEND APPROVED
	←	ACK	The reader may send a ACK or [silence] to each POLL
POLL	→		
	←	VEND APPROVED	The response to the VEND REQUEST is now available. It must be sent within the time defined by the APPLICATION MAXIMUM RESPONSE TIME. This is measured from the ACK following the VEND REQUEST.
ACK	→		

CSC ServiceWorks – Ex. 1008
Page 160 of 270

EXAMPLE VEND SESSION #9
(Pre-approved authorization aborted by coin mechanism escrow return button before BEGIN SESSION)

Controller		Cashless Device	State
	User swipes payment media		
			(Enabled)
POLL	→		
	←	ACK	
READER CANCEL	→		
	←	ACK	
	(If applicable, reader aborts HOST communications, ejects payment media, etc...)		
POLL	→		
	←	CANCELLED	

CSC ServiceWorks – Ex. 1008
Page 161 of 270

EXAMPLE VEND SESSION #10
(Single Negative Vend)

Controller		Cashless Device	State
POLL	→		
	←	BEGIN SESSION	(Session Idle)
ACK	→		
	User inserted a payment media, and inserted then a product, which was detected valid, or pressed a selection button to identify the desired product which will be inserted later on		
NEGATIVE VEND REQUEST	→		
	←	ACK	(Vend)
POLL	→		
	←	VEND APPROVED	
	The payment reader is able to add the desired value to the credit		
ACK	→		
	The product is now fully accepted from the machine or the user has finally finished insertion of a valid product		
VEND SUCCESS	→		
	←	ACK	(Session Idle)
	The payment media reader has added the credit		
SESSION COMPLETE	→		
	←	ACK	
POLL	→		
	←	END SESSION	(Enabled)

Normally, can or bottle return-vendors may check the product first, before the patron inserts his card. It is up to the VMC, to delay the negative vend request, until the session idle state is reached. In many return-vendors, from this state, the product is already fully accepted. Therefore, there is no need for the further sequences, this means, vend accepted, vend success will follow each other immediately.

If the payment media reader is not able to update the credit, there will be two conditions:

- The return vendor is able to escrow the product after the vend denied. In this case the session complete is sent, the product is return and the credit remains unchanged.
- The return vendor is not able to escrow the product after vend denied. In this case, session complete should be sent and there should be an update credit within the system (VMC), which could be returned by other means (i.e. return coins, tokens, etc).

CSC ServiceWorks – Ex. 1008
Page 162 of 270

If a return vendor is able to escrow the product again, this vendor normally accepts the product finally only a vend accepted was sent. In this case there may happen some fault condition which allows no final acceptance of the product. The return vendor then closes the session with vend failed instead of vend success, indicating to the reader not to update the system credit, or, if the payment media is no longer present, request re-insertion of the media.

EXAMPLE DATA ENTRY SESSION #1
(Three key Data Entry w/ Prompt & Asterisks for Entries)

Controller		Cashless Device	State
		Previously Enabled	Enabled
POLL	→		
	←	DATA ENTRY REQUEST + DISPLAY REQUEST (prompt)	
ACK	→		
	User	**pushes Selection Key 1**	
DATA ENTRY RESPONSE (Key 1)	→		
	←	ACK	
POLL	→		
	←	DISPLAY REQUEST (prompt + *)	
ACK	→		
	User	**pushes Selection Key 2**	
DATA ENTRY RESPONSE (Key 2)	→		
	←	ACK	
POLL	→		
	←	DISPLAY REQUEST (prompt + **)	
ACK	→		
	User	**pushes Selection Key 3**	
DATA ENTRY RESPONSE (Key 3)	→		
	←	ACK	(Enabled)
POLL	→		
	←	DISPLAY REQUEST (prompt + *** or "Entry OK")	
ACK	→		

Note: After Display Request Time expires, VMC regains control of display

CSC ServiceWorks – Ex. 1008
Page 163 of 270

POLL	→		
	←	BEGIN SESSION	(Session Idle)
ACK	→		

CSC ServiceWorks – Ex. 1008
Page 164 of 270

EXAMPLE DATA ENTRY SESSION #2
(Data Entry with Reader Cancel)

Controller		Cashless Device	State
		Previously Enabled	Enabled
POLL	→		
	←	DATA ENTRY REQUEST + DISPLAY REQUEST (prompt)	
ACK	→		
	User	**pushes (valid) Selection Key**	
DATA ENTRY RESPONSE (Key 1)	→		
	←	ACK	
POLL	→		
	←	DISPLAY REQUEST (prompt + *)	
ACK	→		
	User	**pushes (invalid) Selection Key**	
DATA ENTRY RESPONSE (Key 2)	→		
	←	ACK	
POLL	→		
	←	DATA ENTRY CANCEL	
ACK	→		(Enabled)
POLL	→		
	←	DISPLAY REQUEST (“Error”)	
ACK	→		
	After VMC	**Display Request Time expires, regains control of display**	

Note that the above scenario is <u>only an example</u> and it may not be prudent to cancel a session after the first wrong entry. (Someone could fraudulently obtain a password by trying the maximum of selection keys at each position.)

CSC ServiceWorks – Ex. 1008
Page 165 of 270

EXAMPLE DATA ENTRY SESSION #3
(Data Entry with VMC Cancel)

Controller		Cashless Device	State
		Previously Enabled	Enabled
POLL	→		
	←	DATA ENTRY REQUEST + DISPLAY REQUEST (prompt)	
ACK	→		
	User	**pushes Selection Key**	
DATA ENTRY RESPONSE (Key 1)	→		
	←	ACK	
POLL	→		
	←	DISPLAY REQUEST (prompt + *)	
ACK	→		
	User	**walks away & VMC times out**	
DATA ENTRY RESPONSE (FF's)	→		
	←	ACK	(Enabled)
POLL	→		
	←	DISPLAY REQUEST ("Try Again")	
ACK	→		
	After VMC	**Display Request Time expires, regains control of display**	

CSC ServiceWorks – Ex. 1008
Page 166 of 270

(this page intentionally left blank)

CSC ServiceWorks – Ex. 1008
Page 167 of 270

CSC ServiceWorks – Ex. 1008
Page 168 of 270

Section 8
Communications Gateway VMC/Peripheral Communication Specifications

8.1 Introduction

This section defines the communications bytes sent and received between a Communications Gateway (Comms Gateway) and the VMC. The Comms Gateway address is 00011xxxB (18H).

Unless otherwise stated, all information is assumed to be in a binary format.

After the VMC has issued a command, the Comms Gateway must respond with a reply. The reply may be an ACK or a detailed message response. If the command format expects a response, the Comms Gateway may: 1) respond with an ACK, to acknowledge receiving the command, and send the response later as a response to a POLL, or 2) immediately respond with the expected message.

The Comms Gateway response to a command from the VMC may be an ACK, a single message, or if there is more data to send it may be a multi message reply, up to the MDB maximum of 36 bytes.

The following command / response set has been defined to provide a means to transfer vending information system data from the VMC to the Comms Gateway in one of two ways;

1) Entire DTS files (including DXS, ST, SD1, G85, SE, and DXE records) are transferred using the file transport layer (FTL) of MDB.

2) Activity “Reports” are sent from the VMC to the Comms Gateway every time something happens in the vending system, it is then the Comms Gateways responsibility to store and assemble the DTS file. (DXS, ST, SD1, G85, SE and DXE data are not sent.) Obviously, a combination of these two methods can be designed to meet specific needs also.

CSC ServiceWorks – Ex. 1008
Page 169 of 270

8.2 VMC Commands

VMC Cmd	Code	VMC Data	Comm Gateway response
RESET	18H		00H - Just RESET (1)
SETUP	19H	Feature level (1) Scale factor (1) Decimal places (1)	01H - Comms Gateway Config (1) Feature level (1) Max. App. Resp. (2)
POLL	1AH		00H - Just RESET (1)
			01H - Comms Gateway Config (1) Feature level (1) Max. App. Resp. (2)
			02H - Request transmit (1)
			03H - Data transmitted (1)
			04H - Error (1) Error code (n)
			05H - DTS Event Acknowledge (1)
			06H - Peripheral ID: (1) Mfg. code (3) Serial number (12) Model number (12) Software ver. (2) Opt. features (4)
			07H - Radio Signal Strength (2)
			1BH - FTL REQ to RCV (option) (1)
			1CH - FTL RETRY / DENY (option) (1)
			1DH - FTL SEND BLOCK (option) (1)
			1EH - FTL OK to SEND (option) (1)
			1FH - FTL REQ to SEND (option) (1)
			FFH - Diagnostics (n)
REPORT	1BH	Type = 01, Transaction (1) Transaction Type (1) Selection (Row/Col.) (2) Price (2) Cash in, Coin tubes (2) Cash in, Cashbox (2) Cash in, Bills (2) Value in, Cashless #1 (2) Value in, Cashless #2 (2) Revalue to Cashless #1 (2) Revalue to Cashless #2 (2) Cash out (2) Discount Amount (2) Surcharge Amount (2) User Group # (1) Price List (1) Date (4) Time (2)	

CSC ServiceWorks – Ex. 1008
Page 170 of 270

		Type = 02, DTS Event (1) DTS Event Code (10) Date (4) Time (2) Duration (4) Activity (1) Terminal ID (12)	05-DTS Event Acknowledge (1)
		Type = 03, Asset ID (1) Asset Type = 0n (1) Manufacture Code (3) Serial Number (12) Model Number (12) Software Version (2) Type = 03, Asset ID (1) Asset Type = 8n (1) Asset Number (20)	
		Type = 04, Currency ID (1) VMC Currency Code (2) VMC Currency (1) VMC Decimal Point (1)	
		Type = 05, Product ID (1) Product Identification (20) Selection Presence (1)	
CONTROL	1CH	00H - Disable (1)	
		01H - Enable (1)	
		02H - Transmit (1)	
EXPANSION	1FH	00H - Identification	06H - Peripheral ID: (1) Mfg. code (3) Serial number (12) Model number (12) Software ver. (2) Opt. features (4)
		01H - Feature enable (1) Features enabled (4)	
		FAH - FTL (option) REQ TO RCV	1DH - SEND BLOCK 1CH - RETRY / DENY
		FBH - FTL (option) RETRY / DENY	No Data
		FCH - FTL (option) SEND BLOCK	No Data
		FDH - FTL (option) OK TO SEND	1DH - SEND BLOCK
		FEH - FTL (option) REQ TO SEND	1EH - OK TO SEND 1CH - RETRY/DENY
		FFH - Diagnostics (n)	FFH - Diagnostics (n)

8.3 Communications Gateway Command Format

VMC Command	Code/Sub-code	VMC Data	Comms Gateway Response
RESET	18H	No data	Z1

This command is the vehicle that the VMC should use to tell the Comms Gateway that it should perform its initialization procedure. With the exception of the ACK response, it should abort all communication and revert to the internally stored operational parameters.

Z1 = 00 JUST RESET

Indicates the Comms Gateway has been reset internally or on command from the VMC.

The following initialization sequence is recommended. It should be used after "power up", after issuing the RESET command, or after issuing the Bus Reset (pulling the transmit line "active" for a minimum of 100 mS).

POLL – 18H
To obtain "JUST RESET" response

SETUP – 19H
To obtain Comms Gateway level and configuration information

EXPANSION IDENTIFICATION – 1F 00H
To obtain additional identification information and options

EXPANSION FEATURE ENABLE – 1F 01H
To enable desired options

CONTROL / ENABLE – 1CH / 01H
To enable / alert the Comms Gateway to start collecting data and / or monitoring for REPORT commands situations.

VMC Command	Code/Sub-code	VMC Data	Comms Gateway Response
SETUP	19H	Y1 - Y3	Z1 - Z4

Y1 = VMC feature level

Indicates the highest Comms Gateway feature level that the VMC supports. Currently the highest feature level is 03, with no requirement to support previous (obsolete) levels 1 and 2.)

CSC ServiceWorks – Ex. 1008
Page 172 of 270

Y2 = Scale factor

The multiplier used to scale all monetary values transferred between the VMC and the Comms Gateway.

Y3 = Decimal places

The number of decimal places used to communicate monetary values between the VMC and the Comms Gateway.

Z1 = 01 COMMS GATEWAY CONFIGURATION

The Comms Gateway is responding to a SETUP command. This response includes the following data;

Z2 = Comms Gateway feature level

The feature level of the Comms Gateway. Currently the highest feature level is 03, with no requirement to support previous (obsolete) levels 1 and 2.)

Z3 - Z4 = Application maximum response time

The maximum length of time, in seconds, that an Comms Gateway may be unable to respond to any commands. This includes the time communicating over an external network. The VMC should continue POLLing the Comms Gateway during this time in an attempt to re-synchronize communications earlier. When the Comms Gateway is ready to communicate over the bus again, it should respond to the next POLL with COMPLETE (if communicating externally) or ACK. This time essentially replaces the standard MDB non-response time, as such it's default value is equal to the defined non-response time (5 seconds).

VMC Command	Code/Sub-code	VMC Data	Comms Gateway Response
POLL	1AH	No data	Z1 - Zn

The POLL command is used by the VMC to obtain information from the Comms Gateway. This information may include setup information, activity requests, or error conditions. An ACK response indicates that no error states exist and either no information request is pending or pending information is not yet ready for transmission.

CSC ServiceWorks – Ex. 1008
Page 173 of 270

In addition to an ACK, the VMC may receive the following POLL responses from the Comms Gateway.

CSC ServiceWorks – Ex. 1008
Page 174 of 270

Z1 = 00 JUST RESET

Indicates the Comms Gateway has been reset internally or on command from the VMC.

Z1 = 01 COMMS GATEWAY CONFIGURATION

The Comms Gateway is responding to a SETUP command. This response includes the following data;

Z2 = Comms Gateway feature level

The feature level of the Comms Gateway. Currently the highest feature level is 03, with no requirement to support previous (obsolete) levels 1 and 2.)

Z3 - Z4 = Application maximum response time

The maximum length of time, in seconds, that an Comms Gateway may be unable to respond to any commands. This includes the time communicating over an external network. The VMC should continue POLLing the Comms Gateway during this time in an attempt to re-synchronize communications earlier. When the Comms Gateway is ready to communicate over the bus again, it should respond to the next POLL with COMPLETE (if communicating externally) or ACK. This time essentially replaces the standard MDB non-response time, as such it's default value is equal to the defined non-response time (5 seconds).

Z1 = 02 REQUEST TO TRANSMIT

The Comms Gateway is requesting permission to transmit data to an external collection device. This is done to control the bus power supply. The Comms Gateway should continue sending this response to each POLL until permission to transmit has been granted or the need to transmit goes away.

Z1 = 03 DATA TRANSMITTED

The Comms Gateway is finished transmitting to an external collect device.

Z1 = 04 ERROR

The Comms Gateway has developed some type of detectable error. The error codes will be sent continuously, or until the error is resolved.

Z2 – Zn = Error code

The error codes are ASCII strings taken from the EVA DTS Communications fault list.

CSC ServiceWorks – Ex. 1008
Page 176 of 270

Z1 = 05 DTS EVENT ACKNOWLEDGE

The Comms Gateway has recognized that a DTS Event has occurred and must act accordingly. The specific actions will be defined by the Comms Gateway operational specifications.

Z1 = 06H PERIPHERAL ID

Comms Gateway is sending peripheral ID information. This response includes the following data;

Z2 - Z4 = Manufacturer code

Identification code for the equipment supplier. Sent as ASCII characters. Blanks (20H) are acceptable.

Z5 - Z16 = Serial number

Factory assigned serial number sent as numeric ASCII characters. All bytes must be sent. Zeros (30H) and blanks (20H) are acceptable.

Z17 - Z28 = Model number ASCII.

Manufacturer assigned model number sent as ASCII characters. All bytes must be sent. Zeros (30H) and blanks (20H) are acceptable.

Z29 - Z30 = Software version

Current software version sent as packed BCD.

Z31 - Z34 = Optional Features

Each of the 32 bits indicate an optional features availability. If the bit is set the feature is available. Currently defined options are:

b0: File transport layer support
b1: Verbose mode: See REPORT command
b2 - b31: Future use, must be set to 0.

Z1 = 07H RADIO SIGNAL STRENGTH

The Comms Gateway is reporting its signal strength from the network. This response includes the following data;

Z2 = Signal Strength

The level of radio signal strength detected by the Comms Gateway. This is a binary number from 00H to 64H (100%) representing the percentage of expected signal. This can be sent after every POLL, or as needed due to changes in the signal.

Note that all FTL responses below are defined in Section 2.6. For the Comms Gateway, the source address will always be the Comms Gateway (18H) as defined in Section 2.3.

Z1 = 1BH REQ TO RCV (File Transport Layer)

The Comms Gateway is requesting to receive data from a device or VMC.

Z2 = Destination address of response
Z3 = Source address of response (18H)
Z4 = File ID
Z5 = Maximum length
Z6 = Control

Z1 = 1CH RETRY/DENY (File Transport Layer)

The Comms Gateway is requesting a device or VMC to retry or deny the last FTL command.

Z2 = Destination address of response
Z3 = Source address of response (18H)
Z4 = Retry delay

Z1 = 1DH SEND BLOCK (File Transport Layer)

The Comms Gateway is sending a block of data (maximum of 31 bytes) to a device or VMC.

Z2 = Destination address of data
Z3 = Block #
Z4-Z34 = Data (maximum of 31 bytes)

Z1 = 1EH OK TO SEND (File Transport Layer)

CSC ServiceWorks – Ex. 1008
Page 178 of 270

The Comms Gateway is indicating that it is OK for a device or VMC to send it data.

Z2 = Destination address of response
Z3 = Source address of response (18H)

CSC ServiceWorks – Ex. 1008
Page 179 of 270

Z1 = 1F REQ TO SEND (File Transport Layer)

The Comms Gateway is requesting to send data to a device or VMC.

Z2 = Destination address of response
Z3 = Source address of response (18H)
Z4 = File ID
Z5 = Maximum length
Z6 = Control

Z1 = FFH DIAGNOSTICS

The Comms Gateway is responding to a EXPANSION/DIAGNOSTICS command. This response includes the following data;

Z2 - Zn User defined data

Device manufacturer specific responses after receiving manufacturing or test instructions. Z1 - Zn implies that any number of bytes may be used for the response data from the Comms Gateway.

VMC Command	Code/Sub-code	VMC Data	Comms Gateway Response
REPORT	1BH	Y1 – Ynn	No data

The REPORT command is used by the VMC to pass activity information to the Comms Gateway. If the “Verbose mode” is enabled via the EXPANSION / FEATURE ENABLE command, this command must be sent immediately following the completion of any activity it is describing. The activities may include; a transaction, a DTS defined event, an asset identification, currency identification, or product identification.

The intent of this command is to provide information so that the Comms Gateway can create a Data Transfer Standard file. All of the following fields show their corresponding DTS fields for reference, for further detail refer to the Data Transfer Standard.

If the “Verbose mode” is disabled, only the “DTS Event” report type records must be sent. This mode uses the FTL to transfer the complete DTS files and the DTS Event report types to alert the VMC of any alarm conditions.

Since reports data may vary, any field that is not relevant, or not known, should be populated with 00H’s. All cash values are scaled and decimal adjusted using the data provided in the SETUP command.

CSC ServiceWorks – Ex. 1008
Page 180 of 270

Y1 = Type: The type of activity that is being reported, includes one of the following:

01H	Transaction
02H	DTS Event
03H	Asset ID
04H	Currency ID
05H	Product ID

If Y1 = 01H then the following "Transaction" data fields have been identified to be included:

Y2 = Transaction Type

This field defines the type of transaction that the following data describes. The defined transaction types include;

01H	Paid Vend
02H	Token Vend
03H	Free Vend
04H	Test Vend
05H	Revalue
06H	Negative Vend
07H	Vendless*
08H	Manual / Service

* The end of a "Vendless" transaction is defined by the VMC manufacturer, for example an escrow request, a failed vend, etc.

Y3 – Y4 = Item Number

This is the binary field used to link REPORT type 01 to REPORT type 05. It is an item number, 0000H through FFFFH of the selected product involved in the most recent transaction. This number is defined by the manufacturer.

Y5 – Y6 = Price (PA102)

The established price of the product involved in the most recent transaction. The established price is the price before any adjustments i.e. discounts surcharges, etc.

Y7 – Y8 = Cash in, Coin Tubes (CA303/CA307 or CA1001/CA1002)

CSC ServiceWorks – Ex. 1008
Page 181 of 270

The value of cash deposited into the coin tubes since the completion of the previous transaction.

Y9 – Y10 = Cash in, Cashbox (CA302/CA306)

The value of cash deposited into the cashbox since the completion of the previous transaction.

Y11 – Y12 = Cash in, Bills (CA304/CA308)

The value of cash deposited into the bill stacker since the completion of the previous transactions.

Y13 – Y14 = Value in, Cashless Device #1 (DA201/DA203)

The value removed from the media in cashless device #1 since the completion of the previous transaction.

Y15 – Y16 = Value in, Cashless Device #2 (DB201/DB203)

The value removed from the media in cashless device #2 since the completion of the previous transaction.

Y17 – Y18 = Revalue to Cashless Device #1 (DA401/DA402)

The value returned to the media in cashless device #1 since the completion of the previous transaction.

Y19 – Y20 = Revalue to Cashless Device #2 (DB401/DB402)

The value returned to the media in cashless device #2 since the completion of the previous transaction.

Y21 – Y22 = Cash out (CA401/CA403 or CA402/CA404)

The total value of the cash dispensed from the system since the completion of the previous transaction.

Y23 – Y24 = Discount Amount (CA701/CA702)

The value of any discounts awarded since the completion of the previous vend.

Y25 – Y26 = Surcharge Amount (CA705/CA706)

The value of any surcharges collected since the completion of the previous vend.

Y27 = User Group # (DA701 or DB701)

The user group number that the transaction is associated with.

Y28 = Price List (LA101)

The price list that the transaction is associated with

Y29 – Y32 = Date (PA501)

The date of the transaction. This data is sent as BCD in the following sequence YYYY/MM/DD. For example, 17 March 2002 would be 20H 02H 03H 17H. If the date is not known these bytes are filled with 99Hs.

Y33 – Y34 = Time (PA502)

The time of the transaction. This data is sent as BCD , 24 hour format, in the following sequence HHMM. For example, 6:30 PM would be 18H 30H. If the time is not known these bytes are filled with 99Hs.

If Y1 = 02H then the following “DTS Event” data fields have been identified to be included:

Y2 – Y11 = DTS Event Code (EA101 or EA201 or EA701)

This is an alpha-numeric ASCII code defining the event being reported. The codes are list in the EVA DTS manual. In addition to the standard DTS event codes, an interrogation event is reported as “EA3” and a power outage event is reported as “EA7”.

Y12 – Y15 = Date (EA102)

The date of the event. This data is sent as BCD in the following sequence YYYY/MM/DD. For example, 17 March 2002 would be 20H 02H 03H 17H. If the date is not known these bytes are filled with 99Hs.

Y16 – Y17 = Time (EA103)

CSC ServiceWorks – Ex. 1008
Page 183 of 270

The time of the event. This data is sent as BCD in the following sequence HH/MM. For example, 6:30 PM would be 18H 30H. If the time is not known these bytes are filled with 99Hs.

Y18 – Y21 = Duration (EA206)

The duration of the event in total minutes. This data is sent as binary. For example, 4 hours and 15 minutes would be 00H 00H 00H FFH.

Y22 = Activity (EA205)

The current status of the events activity. This field is equal to 00H if the event is inactive (or not reset for “EA3”) or 01H if the event is active (or reset for “EA3”).

Z1 = 05 DTS EVENT ACKNOWLEDGE

The Comms Gateway has recognized that a possible alarm situation has occurred and must act accordingly. The specific actions will be defined by the Comms Gateway operational specifications.

If Y1 = 03H then the following “Asset ID” data fields have been identified to be included:

Y2 = Asset Type

The following code pairs have been defined to represent the type of equipment asset that is being communicated.

Code	Equipment type	DTS header (αα)
01H / 81H	Audit Module / Data Carrier (DC) Identification	AM1
02H / 82H	Bill Validator Identification	BA1
03H / 83H	Changer Identification	CA1
04H / 84H	Control Board Identification	CB1
05H / 85H	Cashless #1 Identification	DA1
06H / 86H	Cashless #2 Identification	DB1
07H / 87H	Machine Identification	ID1

If Y2 has the MSB = 0 (i.e. Y2 = 01H) then the following asset data fields have been identified to be included:

Y3 – Y5 = Manufacturer code (αα101, first 3 characters)

Identification code for the equipment supplier. Sent as ASCII characters. Blanks (20H) are acceptable.

Y6 - Y17 = Serial number (αα101, 4th through 15th characters)

Factory assigned serial number sent as numeric ASCII characters. All bytes must be sent. Zeros (30H) and blanks (20H) are acceptable.

Y18 - Y29 = Model number (αα102)

Manufacturer assigned model number sent as ASCII characters. All bytes must be sent. Zeros (30H) and blanks (20H) are acceptable.

Y30 - Y31 = Software version (or Build Standard) (αα103)

Current software version sent as packed BCD.

If Y2 has the MSB = 1 (i.e. Y2 = 81H) then the following asset data fields have been identified to be included:

Y2 – Y21 = Asset Number (αα105 or αα106)

The asset number of the equipment. This is a reference number used for tracking purposes, separate from the serial number. It is usually programmed by the equipment operator.

If Y1 = 04H then the following “Currency ID” data fields have been identified to be included:

Y2 – Y3 = VMC’s Country / Currency Code (ID402)

The packed BCD Country / Currency code of the VMC can be sent in two different forms depending on the value of the left most BCD digit.

If the left most digit is a 0, the International Telephone Code is used to indicate the country that the changer is set-up for. For example, the USA code is 00 01H (Z2 = 00 and Z3 = 01).

If the left most digit is a 1, the latest version of the ISO 4217 numeric currency code is used. For example, the code for the US dollar is 18 40H (Z2 = 18 and Z3 = 40) and for the Euro is 1978 (Z2 = 19 and Z3 = 78).

CSC ServiceWorks – Ex. 1008
Page 185 of 270

All new designs after July, 2000 must use the ISO 4217 numeric currency codes.

Y4 = VMC's Coin Scaling Factor / Currency Description (ID403)

The multiplier used to scale all monetary values transferred between the VMC and the vending machines monetary system.

Y5 = VMC's Decimal Point (ID401)

The number of digits to the right of the decimal point. This field is used in countries whose currency requires a number of digits to the right of the decimal point other than 2.

If Y1 = 05H then the following "Product ID" data fields have been identified to be included:

Y2 – Y3 = Item Number

This is the binary field used to link REPORT type 01 to REPORT type 05. This number is defined by the manufacturer.

Y4 – Y9 = Product Number (PA101)

This is the ASCII representation of the Item Number that should be included in the DTS file. All bytes must be sent, leading blanks (20H) are acceptable.

Y10 – Y29 = Product Identification (PA103)

The ASCII product identification that should identify the product itself, as in a name (chips/crisps) or an ID number / bar code. All bytes must be sent, leading blanks (20H) are acceptable.

Y30 = Selection Presence Status (PA107)

This field is set to 00H if a vend mechanism (motor, solenoid, etc.) is present for this selection. This field is set to 01H if a vend mechanism is not present.

An example of a 01H being sent would be if the vend mechanism was present previously, and something occurred so that it is not being currently detected (i.e., removed, broken wire, etc.). It is **not** intended to indicate that a product is not available for vending (i.e., sold out).

CSC ServiceWorks – Ex. 1008
Page 186 of 270

VMC Command	Code/Sub-code	VMC Data	Comms Gateway Response
CONTROL	1CH	Y1	No data

This command is the vehicle that the VMC uses to control the Comms Gateway's use of an external collection device. For example when it should, or should not, transmit through the external collection device. The information is identified by one of the following subcommands;

Y1 = 00 Disabled

No external transmissions will be granted and no REPORT commands will be sent.

Y1 = 01 Enabled

External transmissions may be requested and REPORT commands will be sent.

Y1 = 02 Transmit

Permission to transmit and / or receive data is granted, or a transmission session is requested. A DATA TRANSMITTED response to a POLL must be sent when the transmission session is complete.

VMC Command	Code/Sub-code	VMC Data	Comms Gateway Response
EXPANSION/ IDENTIFICATION	1FH/00H	Y1	Z1 - Z34

Y1 = 00H IDENTIFICATION subcommand

The VMC is requesting Comms Gateway identification information for asset tracking and optional feature purposes.

Z1 = 06H PERIPHERAL ID

Comms Gateway is sending peripheral ID information. This response includes the following data;

Z2 - Z4 = Manufacturer code

Identification code for the equipment supplier. Sent as ASCII characters. Blanks (20H) are acceptable.

Z5 - Z16 = Serial number

Factory assigned serial number sent as numeric ASCII characters. All bytes must be sent. Zeros (30H) and blanks (20H) are acceptable.

Z17 - Z28 = Model number ASCII.

Manufacturer assigned model number sent as ASCII characters. All bytes must be sent. Zeros (30H) and blanks (20H) are acceptable.

Z29 - Z30 = Software version

Current software version sent as packed BCD.

Z31 - Z34 = Optional Features

Each of the 32 bits indicate an optional features availability. If the bit is set the feature is available. Currently defined options include:

b0:	File transport layer support.
b1:	Verbose mode: See REPORT command
b2 - b31:	Future use, must be set to 0.

VMC Command	Code/Sub-code	VMC Data	Comms Gateway Response
EXPANSION/ FEATURE ENABLE	1FH/01H	Y1 - Y5	No data

Y1 = 01H FEATURE ENABLE subcommand

This command is used to enable each of the optional features defined in Z32-Z35 of the PERIPHERAL ID response. The VMC should send the EXPANSION /IDENTIFICATION command, receive the PERIPHERAL ID response, perform a logical OR with the optional features it wants to enable, and return the resulting enabled features back to the Comms Gateway by setting a bit to 1 for each respective optional feature enabled. All optional features are disabled after reset.

Y2 - Y5 = Optional features enabled

Each of the 32 bits indicates an optional features state. If the bit is set the feature is enabled.

CSC ServiceWorks – Ex. 1008
Page 188 of 270

VMC Command	Code/Sub-code	VMC Data	Comms Gateway Response
EXPANSION COMMAND	0FH FAH **FTL** REQ TO RCV	Y1-Y5	Z1 - Zn (immediate or POLLed)

The VMC is requesting to receive data from the Comms Gateway whose destination address will always be (18H). Note that all FTL Commands / Responses are defined in Section 2.6.

Y1 = Destination address of command (18H)
Y2 = Source address of command
Y3 = File ID
Y4 = Maximum length
Y5 = Control

Z1 = 1DH which indicates SEND BLOCK
Z2 = Destination address of data
Z3 = Block #
Z4 - Z34 = Data (maximum of 31 bytes)

or

Z1 = 1CH which indicates RETRY / DENY
Z2 = Destination address of response
Z3 = Source address of response (18H)
Z4 = Retry delay

CSC ServiceWorks – Ex. 1008
Page 189 of 270

VMC Command	Code/Sub-code	VMC Data	Comms Gateway Response
EXPANSION COMMAND	0FH FBH **FTL** RETRY / DENY	Y1-Y3	None

The VMC is retrying, denying, or aborting a data transfer to/from the Comms Gateway whose destination address will always be (18H). Note that all FTL Commands / Responses are defined in Section 2.6.

Y1 = Destination address of command (18H)
Y2 = Source address of command
Y3 = Retry delay

VMC Command	Code/Sub-code	VMC Data	Comms Gateway Response
EXPANSION COMMAND	0FH FCH **FTL** SEND BLOCK	Y1-Y33	None

The VMC is sending data to the Comms Gateway whose destination address will always be (18H). Note that all FTL Commands / Responses are defined in Section 2.6.

Y1 = Destination address of command & data (18H)
Y2 = Block #
Y3 - Y33 = Data (maximum of 31 bytes)

VMC Command	Code/Sub-code	VMC Data	Comms Gateway Response
EXPANSION COMMAND	0FH FDH **FTL** OK TO SEND	Y1-Y2	Z1-Z34 (immediate or POLLed)

The VMC is indicating that it is OK for the Comms Gateway to transfer data. The destination address will always be the Comms Gateway (18H). Note that all FTL Commands / Responses are defined in Section 2.6.

Y1 = Destination address of command (18H)
Y2 = Source address of command

Z1 = 1DH which indicates SEND BLOCK
Z2 = Destination address of data
Z3 = Source address of data
Z4 - Z34 = Data (maximum of 31 bytes)

CSC ServiceWorks – Ex. 1008
Page 190 of 270

VMC Command	Code/Sub-code	VMC Data	Comms Gateway Response
EXPANSION COMMAND	0FH FEH **FTL** REQ TO SEND	Y1-Y5	Z1 - Zn (immediate or POLLed)

The VMC is requesting to send data to the Comms Gateway whose destination address will always be (18H). Note that all FTL Commands / Responses are defined in Section 2.6.

Y1 = Destination address of command (18H)
Y2 = Source address of command
Y3 = File ID
Y4 = Maximum length
Y5 = Control

Z1 = 1EH which indicates OK TO SEND
Z2 = Destination address of response
Z3 = Source address of response (18H)

or

Z1 = 1CH which indicates RETRY / DENY
Z2 = Destination address of response
Z3 = Source address of response (18H)
Z4 = Retry delay

VMC Command	Code/Sub-code	VMC Data	Comms Gateway Response
EXPANSION/ DIAGNOSTICS	1FH/FFH	Y1 - Yn	Z1 - Zn

Y1 = FFH DIAGNOSTICS subcommand

Device manufacturer specific instruction for implementing various manufacturing or test modes.

Y2 - Yn = User defined data

The data portion of this command is defined by the manufacturer and is not part of this document.

Z1 = FFH DIAGNOSTICS

The Comms Gateway is responding to a EXPANSION/DIAGNOSTICS command. This response includes the following data;

Z2 - Zn = User defined data

Device manufacturer specific responses after receiving manufacturing or test instructions. Z1 - Zn implies that any number of bytes may be used for the response data from the Comms Gateway.

8.4 Communications Gateway Non-Response Time

The maximum non-response time for a Comms Gateway is 5 seconds. This is the maximum time for which a Comms Gateway will not respond to a command with ACK, NAK, or a data message.

8.5 Communications Gateway Power Requirements

The current draw for any Comms Gateway must fall within the following limits. All measurements are at the minimum VMC Voltage Output.

Idle mode = 300 mA. (avg.) continuous

Active mode = 1.8 A continuous and up to 2.5 A (max) for an accumulated maximum of 10 seconds. The active power mode must be initiated by the REQUEST TO TRANSMIT followed by the CONTROL/TRANSMIT. The active power mode must be closed by sending the DATA TRANSMITTED. During this time the VMC will make its own decisions about which other peripherals will be disabled or not. This may result in the entire machine being disabled for normal vending.

CSC ServiceWorks – Ex. 1008
Page 192 of 270

8.6 Communications Gateway Examples

Event	Exchange
Power on Reset at VMC or JUST RESET received by VMC any other time	Reset sequence Enable sequence
Communications Gateway is triggered to send a file	Request sequence Transmit sequence
VMC is triggered to send a file	Dump sequence Transmit sequence
DTS Event situation occurs at VMC	DTS Event sequence Request sequence Transmit sequence
Error situation is detected at Comms Gateway	Error sequence
Every vend completion	Vend sequence

Reset sequence **VMC**		**Comms Gateway**	**Comments**
RESET (18)	➔		Reset command
	←	ACK	
POLL (1A)	➔		Must be sent once reset, internal or external
	←	JUST RESET (00)	
ACK	➔		
SETUP (19…)	➔		Establish operation configuration
	←	CONFIG. (01…)	
ACK	➔		
EXPANSION/ID (1F/00…)	➔		Send asset information
	←	PERIPHERAL ID (06…)	Get asset information
ACK	➔		
EXPANSION/FEATURE ENABLE (1F/01…)	➔		Enable additional feature if necessary
	←	ACK	
Enable sequence **VMC**		**Comms Gateway**	**Comments**
CONTROL/ENABLE (1C01)	➔		Enable command
	←	ACK	
Disable sequence **VMC**		**Comms Gateway**	**Comments**
CONTROL/DISABLE (1C00)	➔		Disable command
	←	ACK	

Request sequence **VMC**		**Comms Gateway**	**Comments**
File transfer done		**using the MDB**	**file transport layer**

Dump sequence **VMC**		**Comms Gateway**	**Comments**
File transfer done		**using the MDB**	**file transport layer**

Transmit sequence **VMC**		**Comms Gateway**	**Comments**
POLL (1A)	➔		
	←	Request to transmit (02)	
ACK	➔		
CONTROL/ TRANSMIT (1C/02)	➔		
	←	ACK	
POLL (1A)			
		ACK	
		. .	Continue POLLing until …
POLL (1A)	➔		
	←	Data transmitted (03)	
ACK	➔		

DTS Event sequence **VMC**		**Comms Gateway**	**Comments**
REPORT (1B / 02…)	➔		
	←	ACK	
		. .	Repeat until recognized
REPORT (1B /02…)	➔		
	←	DTS EVENT ACKNOWLEDGE (05)	

Error sequence **VMC**		**Comms Gateway**	**Comments**
POLL (1A)	➔		Sent continuously, or until the error is resolved
	←	ERROR (06)	
ACK	➔		

Activity sequence **VMC**		**Comms Gateway**	**Comments**
REPORT (1B…)	➔		Sent every activity
	←	ACK	

Section 9

Universal Satellite Device (USD)
VMC/Peripheral Communication Specifications

9.1 Introduction

An MDB Universal Satellite Device (USD) is a vending device which lacks customary credit acceptance peripherals. As such, a USD must rely on a host vending machine controller (VMC) to establish credit sufficient to perform a vend. The specification herein describes a protocol by which a USD and a VMC exchange messages and credit via the MDB bus.

9.1.1 Definitions

This section defines the non-response and application response time, base addresses, and the communication bytes sent by the MDB Universal Satellite Device (USD) and a Vending Machine Controller.

- The default maximum non-response time of the USD is 5 seconds.
- The default maximum application response time of the USD is 5 seconds.
- Three consecutive USD base addresses are defined to allow multiple USDs to operate simultaneously from a single VMC
- As defined in Section 2.3, the USD Base addresses are as follows: 01000xxxB (40H), 01001xxxB (48H), and 01010xxxB (50H).
- The specification defined herein assumes a USD base address of 40H in all examples. It should be understood that differing USD base addresses (48H and 50H) will follow the same command format.
- Multi-message responses to a single command are supported. Message length is subject to the 36 byte limit imposed by the MDB standard.
- Unless stated otherwise, all byte information contained herein is assumed to be in a binary format.
- Y_n represents bytes transmitted by the VMC, and Z_n are bytes transmitted by the USD.
- When words are referenced, they consist of two bytes with the higher order byte first.

	High			Low		
word =	b15	…	b8	b7	…	b0

9.2 USD Summary

This section is a summary of the USD command set and an overview of the modes of operation.

9.2.1 Command Summary

CSC ServiceWorks – Ex. 1008
Page 195 of 270

Command	Hex Code	Description
RESET	40	Command for USD to self-reset.
SETUP	41	Command to configure USD to VMC requirements.
POLL	42	Command to request for USD activity status.
VEND	43	Command for vend approve / deny.
FUNDS	44	Command to send funds available or to set prices.
CONTROL	45	Command to enable/disable USD.
EXPANSION	47	Command to allow addition of features and enhancements.

9.2.2 Overview

The USD Command set described herein allows USDs' to be controlled under the following three modes of operation. The USD's mode of operation is determined by the USD's configuration byte[1] and the sequence of commands the VMC uses.

Mode One VMC is used to select items to be vended from the USD and the VMC contains all pricing information. The USD receives vend requests from the VMC and reports vend success or failure.

Mode Two The USD or the VMC may select items to be vended. The USD may have special requirements for price and/or selection ID display. In this case, the USD may issue a **FUNDS** request to retrieve this information. The USD must then issue a **VEND** request to gain approval from the VMC before a vend can take place.

Mode Three The USD selects items to be vended and has its own pricing information. The USD must issue an vend request to the VMC and gain approval before a vend can take place.

9.3 Command Protocol

This section contains the complete command set relating to the USD.

9.3.1 RESET

[1] Configuration byte refers to byte Z31 of the sequence Z31 through Z34 of the expansion 07 command. Please refer to page 9.12 for more information on how this byte influences the USD's mode of operation.

CSC ServiceWorks – Ex. 1008
Page 196 of 270

Command	Code	VMC Data	USD Response data
RESET	40	No data bytes.	ACK

The **RESET** command is the vehicle that the VMC should use to instruct the USD to return to its default (power on) operating mode. The USD should respond to a reset command with an ACK to acknowledge receipt of the reset command. The USD must not accept any vend requests until the VMC issued setup command sequence has been completed.

The USD must also respond to the VMC issued "master reset" which resets all MDB peripheral devices. The VMC causes a master reset by transmitting a continuous break condition for a minimum of 100 milliseconds.

To ensure proper initialization, the USD should issue a "just reset" (see **POLL** response **00**) whenever it's pricing or configuration has changed.

9.3.2 SETUP

Command	Code	VMC Data	USD Response Data
SETUP	41	5 bytes: Y1-Y5	7 bytes: 04 + Z1 - Z6

The **SETUP** command is the vehicle that the VMC should use to configure the USD for feature level, credit scaling factor, display decimal place, and maximum vend approve/deny time. The USD responds to this command by returning it's feature level, highest vend price (divided by the scaling factor), selection configuration, and maximum application response time.

Alternatively, if the USD is not prepared to render a full response to the **SETUP** command, it may reply with an ACK. If this occurs, the USD must transmit it's setup data later, in response to a **POLL** command (see **POLL** command, response **04**). Until the **SETUP** command has been received by the USD, and the USD has correspondingly returned it's own setup data to the VMC, all vend requests will be disallowed.

Data sequence transmitted by the VMC to the USD during SETUP

VMC Data	Meaning or interpretation
Y1 =	VMC Feature level, Indicates current feature level of the VMC. Currently defined level is one.[2]
Y2 - Y3 =	Scaling factor 2 bytes (word). All transactions with the USD must be evenly divisible by this number.
Y4 =	Decimal place (02=US). Indicates the position of the decimal

[2] Feature level of the VMC is sent to allow the USD to arbitrate command compatibility with the VMC.

CSC ServiceWorks – Ex. 1008
Page 197 of 270

	place on the USD's optional credit display
Y5 =	VMC maximum approve / deny time in seconds, FF = 255 seconds.

Data sequence transmitted by the USD to the VMC during SETUP

USD Response	Meaning or interpretation
04 + Z1 =	USD Feature level, indicates current feature level of the USD. Currently defined level is one.[3]
Z2 - Z3 =	Maximum price on USD in 2 bytes (word). Indicates the highest priced item on the USD.[4] USD should return FF FFh if it does not have internal pricing capability.
Z4 - Z5 =	Item number, defined by the manufacturer configuration (Binary).
Z6 =	USD maximum application response time in seconds, FF = 255 seconds.

[3] Feature level of the USD is sent to allow the VMC to arbitrate command compatibility with the USD. The USD may opt to send this data later in response to a POLL.
[4] The maximum price on the USD is returned to the VMC so this price can be used in the computation of maximum credit acceptance.

CSC ServiceWorks – Ex. 1008
Page 198 of 270

9.3.3 POLL

Command	Code	USD response Data	USD Response Description
POLL	42	00	USD has just been reset, or wishes to be reset by the VMC.
		01 **+** 4 bytes Z1- Z4	Vend request, USD requests approval to vend a specified item from VMC.
		02	Vend or home success, requested vend or home was successful.
		03 **+** 4 bytes Z1 - Z4	Vend or home fail, requested vend or home has failed. Reason for failure is returned.
		04 + 6 bytes Z1 - Z6	USD configuration and setup data.
		05 + 2 bytes Z1 - Z2	USD item price request.
		06 + 2 bytes Z1 - Z2	USD Error codes.
		07 + 34 bytes Z1 - Z34	USD Peripheral ID string.
		08 + 4 bytes Z1 - Z4	USD Status response.
		09 + *n* bytes Z1 - Z*n*	USD multiple data block transfer response.
		0A + n bytes Z1 - Zn	USD single data block response
		1B + 5 bytes Z2 - Z6	FTL REQ TO RCV response
		1C + 3 bytes Z2 - Z4	FTL RETRY / DENY response
		1D + n bytes Z2 - Zn	FTL SEND BLOCK response
		1E + 2 bytes Z2 - Z3	FTL OK TO SEND response
		1F + 5 bytes Z2 - Z6	FTL REQ TO SEND response
		FF + Z1 - Z*n*	USD Diagnostic response.

The **POLL** command is used by the VMC to obtain status information from the USD. The same command is used by the USD to indicate a reset, request a vend, indicate vend success, indicate the reason for a vend failure, request the price of an item, send configuration and/or error data, return the USD's peripheral identification string, control the transmission and reception of data blocks, return a status and/or diagnostic response.

The USD responds to the **POLL** command with either an ACK, or a multi-byte response if there is more information to convey.

CSC ServiceWorks – Ex. 1008
Page 199 of 270

Data sequence transmitted by the USD to the VMC after a *Reset Request*

USD Response	Meaning or interpretation
00	The 00 response indicates that the USD has just been reset or wishes to be reset[5].

Data sequence transmitted by the USD to the VMC for a V*end Request*

USD Response	Meaning or interpretation
01 + Z1- Z2 =	Selection in 2 bytes. Indicates the product to be vended by item number, defined by the manufacturer, as part of a vend request.
Z3 - Z4 =	Scaled product price in 2 bytes (word). Indicates the price of the product to be vended divided by the scaling factor. A price of FFFF is transmitted if the USD does not contain price information.

Data sequence transmitted by the USD to the VMC after a V*end or Home success*

USD Response	Meaning or interpretation
02	Indicates that the requested vend or home was successful.

Data sequence transmitted by the USD to the VMC after a V*end or Home Fail*

USD Response	Meaning or interpretation
03 + Z1 - Z2 =	USD item number, defined by the manufacturer.
Z3 - Z4 =	Bits: b0 = Selection sold out. b1 = Selection motor / actuator jam. b2 = Non-existent motor / actuator. b3 = Invalid selection range[6]. b4 = Health safety error. b5 - b15 = Not defined.

[5] The VMC is expected to reconcile whether the USD is transmitting a 00 in confirmation of a VMC issued reset that has just occurred, or as an unsolicited request to be reset. The context of the VMC's prior communication activity should be used in making this assessment.

Data sequence transmitted by the USD to the VMC if *SETUP response delayed*

USD Response	Meaning or interpretation
04 + Z1 =	USD Feature level, Indicates current feature level of the USD. The currently defined level is one.[7]
Z2 - Z3 =	Maximum price on USD 2 bytes (word). Indicates the highest priced item on the USD.[8] USD should return FF FFh if it does not have internal pricing capability.
Z4 - Z5 =	Item number, defined by the manufacturer.
Z6 =	USD maximum application response time in seconds, FF = 255 seconds.

Data sequence transmitted by the USD if the *USD needs pricing information*

USD Response	Meaning or interpretation
05 + Z1 - Z2 =	Item number, defined by the manufacturer.

Data sequence transmitted by the USD if the *USD has a failure to report to VMC*

USD Response	Meaning or Interpretation
06 + Z1 - Z2 =	Bits: b0 = Health Safety violation. b1 = Home or Chute sensor failure b2 = Keypad or Selection switch failure b3 - b15 = Not defined.

Data sequence transmitted by the USD for peripheral ID

[6] This error code is included to identify actuators that may not be present within the initially defined row and column configuration. See bytes Z4 and Z5 of the USD's setup response. This is typical in a snack machine implementation where some trays may not be populated with a full complement of motors and/or actuators.

[7] Feature level of the USD is sent to allow the VMC to arbitrate command compatibility with the USD. The USD may have elected to transmit this setup data in fulfillment of an earlier **SETUP** command.

[8] The maximum price on the USD is returned to the VMC so this price can be used in the computation of maximum credit acceptance.

CSC ServiceWorks – Ex. 1008
Page 201 of 270

USD Response	Meaning or Interpretation
07 + Z1 - Z4 =	Manufacturer ID Code.
Z5 - Z16 =	USD Serial Number.
Z17 - Z28 =	USD Model Number.
Z29 - Z30 =	USD Software Version.
Z31 - Z34 =	Optional feature bits.

Data sequence transmitted by the USD to the VMC after a Status request

USD Response	Meaning or interpretation
08 + Z1 - Z2 =	Item number, defined by the manufacturer.
Z3 - Z4 =	Bits: b0 = Selection sold out. b1 = Selection motor / actuator jam. b2 = Non-existent motor / actuator. b3 = Invalid selection range. b4 = Health safety error. b5 - b15 = Not defined.

Data sequence transmitted by the USD to the VMC after a USD data transfer command

USD Response	Meaning or interpretation
09 + Z1 =	Z1 = 00 USD requests to receive data block Z2 from VMC Z1 = 01 USD requests to send Z2 data block(s) to VMC Z1 = 02 USD data block response where: Z2 = data block number Z3 - *Zn* = contents of data block
Z2 =	Z2 = Block number USD requests to receive if Z1 = 00 Z2 = Number of blocks the USD requests to send if Z1 = 01 Z2 = Block number the USD is sending if Z1 = 02.
Z3 - *Zn* =	Contents of data block sent by USD to VMC if Z1 = 02

CSC ServiceWorks – Ex. 1008
Page 202 of 270

Data sequence transmitted by the USD to the VMC to send a single block of data

USD Response	Meaning or interpretation
0A + Z1 - Z*n*=	Z1 -Z*n* = Arbitrary data to be received by the VMC. The number "*n*" must be less than 35 per MDB standards

Data sequence transmitted by the USD to the VMC after an File Transport Layer (FTL) REQ TO RCV command

USD Response	Meaning or interpretation
Z1=1B + Z2 - Z6	The USD is requesting to receive data from a device or VMC Z2 = Destination address of response Z3 = Source address of response (40H, 48H, 50H) Z4 = File ID Z5 = Maximum length Z6 = Control

Data sequence transmitted by the USD to the VMC after an File Transport Layer (FTL) RETRY / DENY command

USD Response	Meaning or interpretation
Z1=1C + Z2 - Z4	The USD is requesting a device or VMC to retry or deny the last FTL command. Z2 = Destination address of response Z3 = Source address of response (40H, 48H, 50H) Z4 = Retry delay

Data sequence transmitted by the USD to the VMC after an File Transport Layer (FTL) SEND BLOCK command

USD Response	Meaning or interpretation
Z1=1D + Z2 - Z34	The USD is sending a block of data (maximum of 31 bytes) to a device or VMC. Z2 = Destination address of response Z3 = Block # Z4 - Z34 = Data (maximum of 31 bytes)

Data sequence transmitted by the USD to the VMC after an File Transport Layer (FTL) OK TO SEND command

USD Response	Meaning or interpretation
Z1=1E + Z2 - Z3	The USD is indicating that it is OK for the device or VMC to send it data. Z2 = Destination address of response Z3 = Source address of response (40H, 48H, 50H)

Data sequence transmitted by the USD to the VMC after an File Transport Layer (FTL) REQ TO SEND command

USD Response	Meaning or interpretation
Z1=1F + Z2 - Z6	The USD is requesting to send data to a device or VMC. Z2 = Destination address of response Z3 = Source address of response (40H, 48H, 50H) Z4 = File ID Z5 = Maximum length Z6 = Control

Data sequence transmitted by the USD to the VMC after a diagnostic command

USD Response	Meaning or interpretation
FF + Z1 - *Zn* =	Diagnostic response.

9.3.4 VEND

Command	Code	Sub-Cmd	VMC Data	Response Data
VEND	43	00	none	none
	43	01	none	none
	43	02	2 bytes Y1-Y2	none
	43	03	2 bytes Y1-Y2	none
	43	04	2 bytes Y1-Y2	5 bytes: 08 + Z1 - Z4

CSC ServiceWorks – Ex. 1008
Page 204 of 270

The **VEND** command is the vehicle that the VMC uses to signal vend approval or disapproval in response to a USD issued vend request (**POLL** response 01). The VEND command can also be used by the VMC to initiate a vend, home a selection, or query the status of a selection on the USD.

Sub Cmd:	Meaning or interpretation
00 =	Requested vend approved.
01 =	Requested vend disapproved.
02 =	Vend specified Item number, defined by the manufacturer.
03 =	Home specified Item number, defined by the manufacturer.
04 =	Request status of specified Item number, defined by the manufacturer.

Data sequence transmitted by the USD to the VMC after a Status request

USD Response	Meaning or interpretation
08 + Z1 - Z2 =	Item number, defined by the manufacturer.
Z3 - Z4 =	Bits: b0 = Selection sold out. b1 = Selection motor / actuator jam. b2 = Non-existent motor / actuator. b3 = Invalid selection range. b4 = Health safety error. b5 - b15 = Not defined.

9.3.5 FUNDS

Command	Code	Sub-Cmd	VMC Data	Response Data
FUNDS	44	00	2 bytes: Y1-Y2	none
	44	01	6 bytes: Y1-Y6	none

The **FUNDS** command is the vehicle the VMC should use to specify the funds available for vending. The **FUNDS** 00 command is issued by the VMC whenever the level of credit changes. Typically, the USD would display the credit information returned by a **FUNDS** 00 command on a credit display. The **FUNDS** 01 is issued by the VMC in response to an item price request (**POLL** response 05) by the USD.

Sub-Cmd	Meaning or interpretation

CSC ServiceWorks – Ex. 1008
Page 205 of 270

00 + Y1 - Y2 =	Funds available in 2 bytes (word), scaled by the coin scaling factor.

Sub Cmd	Meaning or interpretation
01 + Y1 - Y2 =	Item number, defined by the manufacturer.
Y3 - Y4 =	Selection price in 2 bytes (word) scaled by coin scaling factor.
Y5 - Y6 =	Alphanumeric selection identifier 2 bytes (word), or FFFF if not available.[9]

9.3.6 CONTROL

Command	Code	Sub-Cmd	VMC Data	Response Data
CONTROL	45	00	none	none
	45	01	none	none

This command is the vehicle the VMC should use to enable or disable the USD.

Sub-Cmd	Meaning or interpretation
00	Disable USD.
01	Enable USD.

9.3.7 EXPANSION

Command	Code	Sub-Cmd	VMC Data	Response Data
EXPANSION	47	00	None	07 + Z1 - Z34 Peripheral ID string and feature bits.
	47	01	Y1 – Y4	none
	47	02	Y1	none
	47	03	Y1 - Y*n*	none
	47	04	Y1	09 + Z1 + Z2 - Z*n*
	47	05	Y1 - Y*n*	none
	47	FA	Y1 - Y5	1D + Z2 - Z34 or 1C + Z2 - Z4
	47	FB	Y1 - Y3	none

[9] Alpha-numeric selection identifier is provided to the USD for display purposes only.

	47	FC	Y1 - Y33	none
	47	FD	Y1 - Y2	1D + Z2 - Z34
	47	FE	Y1 - Y5	1E + Z2 - Z3 or 1C + Z2 - Z4
	47	FF	Diagnostics	Diagnostic response.

Data sequence transmitted by the USD to the VMC after an expansion 00 sub-command

USD Response	Meaning or Interpretation
07 + Z1 - Z3 =	Manufacturer ID Code.
Z4 - Z15 =	USD Serial Number.
Z16 - Z27 =	USD Model Number.
Z28 - Z30 =	USD Software Version.
Z31 - Z34 =	Optional feature bits: b0 = USD is capable of storing and controlling pricing. b1 = USD is capable of selecting items to vend. b2 = USD is capable of supporting the File Transport Layer. This support is defined in Section 2.6. b3 - b31 = Available for future use.

Sub-Command used by the VMC to enable optional feature bits on the USD

Sub-Cmd	Meaning or interpretation
01 + Y1 - Y4	Enable optional feature bits defined in Z31-Z34 above. Feature is enabled if bit is set to 1, all features are disabled after a reset.

Sub-Command used by the VMC to identify the number of data blocks it wishes to send to the USD

Sub-Cmd	Meaning or interpretation
02 + Y1	Number of data blocks the VMC has to send to the USD (Binary)

Sub-Command used by the VMC to transmit a data block to the USD (Y2-Y*n*) and to identify the current block number being transmitted (Y1)

Sub-Cmd	Meaning or interpretation
03 + Y1	Block number the VMC is transmitting to the USD

CSC ServiceWorks – Ex. 1008
Page 207 of 270

Y2 - Y*n*[10]	Data the VMC is transmitting to the USD

Sub-Command used by the VMC to request that the USD send or re-send data block number (Y1)

Sub-Cmd	Meaning or interpretation
04 + Y1	VMC requests USD to send block Y1

Sub-Command used by the VMC to send a single block of data to the USD

Sub-Cmd	Meaning or interpretation
05 + Y1 - Y*n*	VMC sends a single block of data consisting of Y1..Y*n*

Sub-Command used by the VMC for an FTL REQ TO RCV. The Z1- Zn response can be either immediate or delayed (POLLed).

Sub-Cmd	Meaning or interpretation
FA + Y1 - Y5	The VMC is requesting to receive data from the USD whose destination address will always be (40H, 48H, 50H). Note that all FTL Commands / Responses are defined in Section 2.6. Y1 = Destination address of command (40H,48H,50H) Y2 = Source address of command Y3 = File ID Y4 = Maximum length Y5 = Control
USD Response	**Meaning or interpretation**
Z1 - Z34 or Z1 - Z4	Z1 = 1DH which indicates SEND BLOCK Z2 = Destination address of data Z3 = Block # Z4 - Z34 = Data (maximum of 31 bytes) or Z1 = 1CH which indicates RETRY / DENY Z2 = Destination address of response Z3 = Source address of response (40H,48H,50H) Z4 = Retry delay

[10] The number "*n*" is limited by the MDB maximum message length of 36 bytes.

CSC ServiceWorks – Ex. 1008
Page 208 of 270

Sub-Command used by the VMC for an FTL RETRY / DENY.

Sub-Cmd	Meaning or interpretation
FB + Y1 - Y3	The VMC is retrying, denying, or aborting a data transfer to/from the USD whose destination address will always be (40H, 48H, 50H). Note that all FTL Commands / Responses are defined in Section 2.6. Y1 = Destination address of command (40H,48H,50H) Y2 = Source address of command Y3 = Retry delay

Sub-Command used by the VMC for an FTL SEND BLOCK.

Sub-Cmd	Meaning or interpretation
FC + Y1 - Y33	The VMC is sending data to the USD whose destination address will always be (40H, 48H, 50H). Note that all FTL Commands / Responses are defined in Section 2.6. Y1 = Destination address of command (40H,48H,50H) Y2 = Block # Y3 - Y33 = Data (maximum of 31 bytes)

Sub-Command used by the VMC for an FTL OK TO SEND. The Z1 to Z33 response can be either immediate or delayed (POLLed).

Sub-Cmd	Meaning or interpretation
FD + Y1 - Y2	The VMC is requesting to receive data from the USD whose destination address will always be (40H, 48H, 50H). Note that all FTL Commands / Responses are defined in Section 2.6. Y1 = Destination address of command (40H,48H,50H) Y2 = Source address of command
USD Response Z1 - Z34	**Meaning or Interpretation** Z1 = 1DH which indicates SEND BLOCK Z2 = Destination address of data Z3 = Source address of data Z4 - Z34 = Data (maximum of 31 bytes)

Sub-Command used by the VMC for an FTL REQ TO SEND. The Z1 - Zn response can be either immediate or delayed (POLLed).

Sub-Cmd	Meaning or interpretation
FE + Y1 - Y5	The VMC is requesting to send data to the USD whose destination address will always be (40H, 48H, 50H). Note that all FTL Commands / Responses are defined in Section 2.6.

CSC ServiceWorks – Ex. 1008
Page 209 of 270

USD Response Z1 - Z34 or Z1 - Z4	Y1 = Destination address of command (40H,48H,50H) Y2 = Source address of command Y3 = File ID Y4 = Maximum length Y5 = Control **Meaning or Interpretation** Z1 = 1EH which indicates OK TO SEND Z2 = Destination address of response Z3 = Source address of response (40H,48H,50H) or Z1 = 1CH which indicates RETRY / DENY Z2 = Destination address of response Z3 = Source address of response (40H,48H,50H) Z4 = Retry delay

Data sequence transmitted by the USD to the VMC after a diagnostic command

USD Response	Meaning or interpretation
FF + Z1 - *Zn* =	Diagnostic response.

9.4 USD Power Requirements

This section defines the maximum power requirements for a USD.

USD peripherals may draw power from the MDB bus or from an integral power supply. In such cases where the USD will require power from the MDB bus, the current draw must remain within the following limits:

USD Mode	Current draw
Idle	200 mA (maximum continuous)
Vending/Homing	1.75 A (for up to 10 seconds)

CSC ServiceWorks – Ex. 1008
Page 210 of 270

9.5 Examples – Mode 1 / 2 / 3 Sessions

This section contains three examples of USD sessions in which each of the three modes of USD operation are demonstrated operation respectively.

9.5.1 MODE ONE

In this example session the VMC selects the item to vend and knows the vend price. The USD receives the vend command, attempts the vend, and reports if the attempted vend failed or was successful.

VMC	MDB Data	Explanation	USD
Þ	**43+02+01+03**	VMC requests to vend item from the USD.	
	<ACK>	USD acks vend request.	Ü
Þ	**42**	VMC polls the USD.	
	<ACK>	USD acks receipt of poll.	Ü
Þ	**42**	VMC polls the USD again .	
	02	USD responds: vend complete	Ü
Þ	**<ACK>**	VMC acks vend outcome.	

CSC ServiceWorks – Ex. 1008
Page 211 of 270

9.5.2 MODE TWO

In this example session the USD or the VMC can select items to vend but the USD may not be aware of the vend price of the item selected. If the USD needs the selected item price, it may request the item price from the VMC. The USD must then issue a **VEND** request, and wait for approval from the VMC before a vend is attempted. The VMC then approves or denies the requested vend and polls the USD for vend success or vend fail.

VMC	MDB Data	Explanation	USD
þ	**42**	VMC polls the USD.	
	05+02+06	USD responds with pricing request for item in USD.	⇐
þ	**<ACK>**	VMC acks the USD price request.	
þ	**44+01+02+06+00+14 +FF+FF**	Using the Funds command the VMC sends a price of 20 coin factors for item in USD.	
	<ACK>	USD acks receipt of VMC price data.	⇐
þ	**42**	VMC polls the USD.	
	01+02+06+FF+FF	USD responds with a request to vend item in USD at the VMC selected price.	⇐
þ	**<ACK>**	VMC acks receipt of vend request.	
þ	**43 + 00** or **01**	VMC approves or denies vend request.	
	<ACK>	USD acks receipt of approval or denial.	⇐
þ	**42**	VMC polls the USD.	
	03+02+06+00+01	USD responds: vend fail, sold out.	⇐
þ	**<ACK>**	VMC acks vend outcome.	

- The **FUNDS** command can be used by USD's which do not have internal prices but need pricing information for display purposes or for other reasons that are not required to complete a transaction.

CSC ServiceWorks – Ex. 1008
Page 212 of 270

9.5.3 MODE THREE

In this example session the USD selects the item to vend and is aware of the vend price of the item. The USD must issue a vend request and the VMC then approves or denies the requested vend. The VMC then polls the USD for vend success or vend fail.

VMC	MDB Data	Explanation	USD
þ	**42**	VMC polls the USD.	
	01+03+02+00+1E	USD requests vend for item at in USD with price of 30 coin factors.	Ü
þ	**<ACK>**	VMC acks the USD vend request.	
þ	**43+ 00** or **01**	VMC approves or denies vend request.	
	<ACK>	USD acks receipt of approval or denial.	Ü
þ	**42**	VMC polls the USD.	
	02	USD responds: vend complete	Ü
þ	**<ACK>**	VMC acks vend outcome.	

CSC ServiceWorks – Ex. 1008
Page 213 of 270

9.6 Examples - Data Block Transfers

This section contains two examples in which data blocks are transferred between the VMC and the USD and vice versa.

9.6.1 Data Block Transfer from VMC to USD

In this example the VMC wishes to send two data blocks to the USD. To do this, the VMC uses the expansion 02 command to advise the USD of it's request to send data and also to identify the number of data blocks it wishes to send. In response, the USD uses a poll 09 to request the transmission of a data block with the block number enumerated as part of it's poll response. The VMC then uses a different expansion command (03) to send the data to the USD.

VMC	MDB Data	Explanation	USD
þ	**47+02+02**	VMC issues a request to send two data blocks to the USD	
	<ACK>	USD acks receipt of the request	⇐
þ	**42**	VMC polls the USD	
	09+00+01	USD responds with a request to receive data block number 01 from the VMC	⇐
þ	**<ACK>**	VMC acks receipt of block number	
þ	**47+03+01+21+22+23**	VMC transmits block number 01 containing data: 21, 22, and 23.	
	<ACK>	USD acks receipt of the data block	⇐
þ	**42**	VMC polls the USD.	
	09+00+02	USD responds with a request to receive data block number 02 from the VMC.	⇐
þ	**<ACK>**	VMC acks receipt of the block number.	
þ	**47+03+02+24+25+26**	VMC transmits block number 02 containing data: 24, 25, and 26.	
	<ACK>	USD acks receipt of the data block	⇐

CSC ServiceWorks – Ex. 1008
Page 214 of 270

9.6.2 Data Block Transfer from USD to VMC

In this example the USD wishes to send two data blocks to the VMC. To do this, the USD makes use of the Poll 09 command to inform the VMC of it's request to send data and also to identify the number of data blocks it wishes to send. In response, the VMC uses expansion 04 command to request the transmission of a data block by the individual block number. The USD then uses the poll 09 response to send the data blocks to the VMC.

VMC	MDB Data	Explanation	USD
þ	**42**	VMC polls the USD	
	09+01+02	USD responds with a request to send 2 data blocks to the VMC	⇐
þ	**<ACK>**	VMC acks request to send data	
þ	**47+04+01**	VMC responds with a request to receive data block number 01 from the USD	
	<ACK>	USD acks receipt of block number request	⇐
þ	**42**	VMC polls the USD	
	09+02+01+55+56+57	USD responds by transmitting block number 01 containing data 55, 56, and 57.	⇐
þ	**<ACK>**	VMC acks receipt of data	
þ	**47+04+02**	VMC responds with a request to receive data block number 02 from the USD	
	<ACK>	USD acks receipt of block number request	⇐
þ	**42**	VMC polls the USD	
	09+02+02+58+59+60	USD responds by transmitting block number 02 containing data 58, 59, and 60.	⇐
þ	**<ACK>**	VMC acks receipt of data	

CSC ServiceWorks – Ex. 1008
Page 215 of 270

(this page intentionally left blank)

CSC ServiceWorks – Ex. 1008
Page 216 of 270

Section 10

Coin Hopper or Tube - Dispenser
VMC/Peripheral Communication Specifications

10.1 Introduction

This section defines the communication bytes sent and received by a coin dispensing device, which may be in the form of a hopper or tube device. As defined in Section 2.3, the dispenser's address is 01011xxxB (58H).

Unless stated otherwise, all information is assumed to be in a binary format

10.2 VMC Commands

Command	Hex Code	Description
RESET	58H	Command for dispenser to self-reset
SETUP	59H	Request for dispenser setup.
DISPENSER STATUS	5AH	Request for dispenser tube / hopper status and coin count.
POLL	5BH	Request for dispenser activity status.
MANUAL DISPENSE	5CH	Signifies coin types allowable for coin dispensing. This command is followed by setup data. See command format section.
ENABLE		
DISPENSE *	5DH	Command to dispense coins. Followed by coin type or value to dispense. See command format section.
PAYOUT *	5EH	Command to determine value of coins dispensed. Followed by payout status or value poll. See command format section.
EXPANSION *	5FH	Command to allow addition of features, File Transport Layer, and future enhancements. See command format section.

*** NOTE:** DISPENSE, PAYOUT, and EXPANSION commands are always followed by a “sub-command.”

CSC ServiceWorks – Ex. 1008
Page 218 of 270

10.3 VMC Command Format

VMC Command	Code	VMC Data
RESET	58H	No data bytes

This command is the vehicle that the VMC should use to tell the dispenser that it should return to its default operating mode and initialize internal hardware systems. With the exception of the ACK response, it should abort all communication until otherwise instructed by the VMC.

The following initialization sequence is recommended. It should be used after "power up" or after issuing the Bus Reset (pulling the transmit line "active" for a minimum of 100 mS).

RESET – 58h
POLL – 5Bh
To obtain "JUST RESET" response

SETUP – 59h
To obtain dispenser level and configuration information

EXPANSION IDENTIFICATION – 5F 00h
To obtain additional dispenser information and options

EXPANSION FEATURE ENABLE – 5F 01h
To enable desired options

DISPENSER STATUS – 5Ah (Note 1)
To obtain dispenser status / change information

MANUAL DISPENSE ENABLE – 5Ch
To enable and disable manual coin pay-out if desired

No power above idle current can be drawn until after the first POLL following the RESET command. Also, the JUST RESET response to the POLL command must be delayed until any high current usage has been completed.

The dispenser must hold its response of the DISPENSER status until a valid current reading from the sensor system is achieved.

CSC ServiceWorks – Ex. 1008
Page 219 of 270

VMC Command	Code	Dispenser Response Data
SETUP	59H	26 bytes: Z1 - Z26

Z1 = Dispenser Feature Level - 1 byte

Indicates the feature level of the dispenser. This will distinguish the dispensers feature level to the VMC. Currently only level 1 is supported.

Z2 - Z3 = Country / Currency Code - 2 bytes

The packed BCD currency code of the dispenser is sent with the left most digit a 1. See Appendix A1 for the latest version of the ISO 4217 numeric currency code. For example, the code for the US dollar is 18 40H (Z2 = 18 and Z3 = 40) and for the Euro is 1978 (Z2 = 19 and Z3 = 78).

Z4 = Coin Scaling Factor - 1 byte

All dispensed coin values must be evenly divisible by this number. For example, this could be set to 05H for the USA nickel.

Z5 = Decimal Places - 1 byte

Indicates the number of decimal places on a credit display. For example, this could be set to 02H in the USA.

Z6 = Application Maximum Response Time (seconds) – 1 byte
The maximum length of time a dispenser will require to provide a response to any command from the VMC. The value reported here supercedes the dispenser's default NON-RESPONSE time defined in section 10.4 if the value reported here is greater.

Z7 – Z8 = Bit set, if coin disabled by dispenser (i.e. switch).

Z9 – Z10 = Bit set, if coin is self filling.

Z11 - Z26 = Coin Type Credit - 16 bytes

Indicates the value of coin types 0 to 15. Values must be sent in ascending order. This number is the coin's monetary value divided by the coin scaling factor. Unused coin types are sent as 00H. Unsent coin types are assumed to be zero. It is not necessary to send all coin types. Coin type credits sent as FFH are assumed to be vend tokens. That is, their value is assumed to be worth one vend.

CSC ServiceWorks – Ex. 1008
Page 220 of 270

The byte position in the 16 byte string indicates the coin type(s). For example, the first byte sent would indicate the value of coin type 0, the second byte sent would indicate the value of coin type 1, and so on. For example, the USA coin types may be; Coin type 0 = nickel, Coin type 1 = dime, Coin type 2 = quarter, Coin type 3 = dollar.

CSC ServiceWorks – Ex. 1008
Page 221 of 270

VMC Command	Code	Dispenser Response Data
DISPENSER STATUS	5AH	34 bytes: Z1 – Z34

Z1 - Z2 = Dispenser Full Status - 2 bytes

Indicates status of coin tube / hopper for coin types 0 to 15.

b15 b14 b13 b12 b11 b10 b9 b8 | b7 b6 b5 b4 b3 b2 b1 b0
Z1 Z2

A bit is set to indicate a full dispenser. For example, bit 7 = set would indicate the dispenser for coin type 7 is full.

Z3 – Z34 = Coin Count - 32 bytes

Indicates the greatest number of coins that the dispenser “knows” definitely are present in the coin tube / hopper. A word (2bytes) position in the 32 byte string indicates the number of coins in a tube / hopper for a particular coin type. For example, the first 2 bytes sent indicate the number of coins in a tube / hopper for coin type 0. Unsent bytes are assumed to be zero. For tube / hopper counts greater than 65535, counts should remain at 65535.

NOTE: If a dispenser can detect a tube or hopper jam, defective tube or hopper sensor, or other malfunction, it will indicate the tube / hopper is "bad" by sending a tube / hopper full status and a count of zero for the malfunctioning coin type.

VMC Command	Code	Dispenser Response Data
POLL	5BH	32 bytes: Z1 – Z32

Z1 - Z32 = Dispenser Activity - 32 bytes

Indicates the dispenser activity. If there is nothing to report, the dispenser should send only an ACK. Otherwise, the only valid responses are:

Coins Dispensed:

Z1 (10yzxxxx)

z	z=1 for manual dispense z=0 to report a non manual (automatic) dispense
y	y=1 For payout complete.
xxxx	The coin type dispensed (0 to 15)

CSC ServiceWorks – Ex. 1008
Page 222 of 270

Z2 - Z3	The number of coins dispensed.
Z4 – Z5	The number of coins in the dispenser.

CSC ServiceWorks – Ex. 1008
Page 223 of 270

Status:

(00000001) =	Escrow request[1] - An escrow lever activation has been detected. If a button is present and activated.
(00000010) =	Dispenser Payout Busy[2] - The dispenser is busy activating payout devices.
(00000011) =	Not Used
(00000100) =	Defective Dispenser Sensor[1] - The dispenser has detected one of the dispenser sensors behaving abnormally.
(00000101) =	Not Used
(00000110) =	Dispenser did not start[1].
(00000111) =	Dispenser Jam[1] - A dispenser payout attempt has resulted in jammed condition.
(00001000) =	ROM checksum error[1] - The dispensers internal checksum does not match the calculated checksum.
(00001001) =	Not Used
(00001010) =	Not Used
(00001011) =	Dispenser was "Just Reset"[1] - The dispenser has detected a Reset condition and has returned to its power-on idle condition.
(00001100) =	Not Used
(00001101) =	Not Used
(00001110) =	Not Used
(00001111) =	Filled key pressed[1] – The VMC should request a new DISPENSER STATUS.

NOTES: The dispenser may send several of one type activity, up to 16 bytes total. This will permit zeroing counters such as inventory and status.

1 Sent once each occurrence.
2 Sent once each POLL

CSC ServiceWorks – Ex. 1008
Page 224 of 270

File Transport Layer POLLed responses:

Note that all FTL responses are defined in Section 2.6. For the coin dispenser, the source address will always be the dispenser (58H) as defined in Section 2.3.

Z1

1B REQ TO RCV The coin dispenser is requesting to receive data from a device or VMC.

Z2 = Destination address of response
Z3 = Source address of response (58H)
Z4 = File ID
Z5 = Maximum length
Z6 = Control

1C RETRY/DENY The coin dispenser is requesting a device or VMC to retry or deny the last FTL command.

Z2 = Destination address of response
Z3 = Source address of response (58H)
Z4 = Retry delay

1D SEND BLOCK The coin dispenser is sending a block of data (maximum of 31 bytes) to a device or VMC.

Z2 = Destination address of data
Z3 = Block #
Z4-Z34 = Data (maximum of 31 bytes)

1E OK TO SEND The coin dispenser is indicating that it is OK for a device or VMC to send it data.

Z2 = Destination address of response
Z3 = Source address of response (58H)

1F REQ TO SEND The coin dispenser is requesting to send data to a device or VMC.

Z2 = Destination address of response
Z3 = Source address of response (58H)
Z4 = File ID
Z5 = Maximum length
Z6 = Control

CSC ServiceWorks – Ex. 1008
Page 225 of 270

CSC ServiceWorks – Ex. 1008
Page 226 of 270

VMC Command	Code	VMC Data
MANUAL DISPENSE ENABLE	5CH	2 bytes: Y1 – Y2

Y1 - Y2 = Manual Dispense Enable - 2 bytes

b15	b14	b13	b12	b11	b10	b9	b8	b7	b6	b5	b4	b3	b2	b1	b0
Y1								Y2							

A bit is set to indicate dispense enable. For example, bit 2 is set to enable dispensing of coin type 2. This command enables/disables manual dispensing using optional inventory switches. All manual dispensing switches are automatically disabled upon reset.

VMC Command	Code	Sub-command	VMC Data
DISPENSE COINS	5DH	00H	3 bytes: Y1 – Y3

b7	b6	b5	b4	b3	b2	b1	b0
Y1							

Bits b3, b2, b1, b0 indicate coin type to be dispensed. Valid codes are 0H to FH to indicate coin types 0 to 15.

Bits b7, b6, b5, b4 = 0

Y2 - Y3 = Number of coins to be dispensed of coin type defined in Y1

There is no defined limit on how long the actual dispense takes since the command allows for up to 65535 coins to be paid out. The payout cycle begins when the dispenser ACKs the VMC's DISPENSE (5DH) command. This cycle typically lasts a minimum of 100 mS and ends when the dispenser stops dispensing the desired number of coins. VMCs should monitor the Dispenser Payout Busy and Dispenser Activity response to the POLL (5B) command to determine when the entire payout cycle is completed.

VMC Command	Code	Sub-command	VMC Data
DISPENSE VALUE	5DH	01H	2 bytes: Y1, Y2

Y1 – Y2 = Value of coins to be paid out.

CSC ServiceWorks – Ex. 1008
Page 227 of 270

Y1 and Y2 are defined as the value of coins and this value is expressed as the number of coin scaling factors that would sum to the value. For example, in a USA system using a scaling factor of 05, if the change to be paid out is 75 cents, then Y1 will equal fifteen. That is, the sum of fifteen nickels equal 75 cents. The coin dispenser will determine which actual denominations of coins will be paid out. In the 75 cent example, the coins may be 3 quarters; or, 7 dimes & 1 nickel; or, 2 quarters & 2 dimes & 1 nickel, etc. The actual coins dispensed and if the dispense is finished can be acquired via the PAYOUT STATUS (5E, 00) and PAYOUT VALUE POLL (5E, 01).

CSC ServiceWorks – Ex. 1008
Page 228 of 270

VMC Command	Code	Sub-command	VMC Data	Dispenser Response
PAYOUT STATUS	5E	00H	None	32 bytes: Z1-Z32

Z1 – Z32 = Number of each coin type paid out - 32 bytes (2 bytes per coin type).

This is the dispenser's response to the last VMC DISPENSE VALUE command (5DH sub command 01H). Bytes are sent in ascending order of coin types. A bytes position in the string indicates the coin type. That is, bytes one and two are the number of coins for coin type 1, bytes three and four are the number of coins for coin type two, and so on. Unsent bytes above the coin types dispensed are assumed to be zero.

The dispenser clears payout data after an ACK response from the VMC.

The VMC should compare the value of the coins paid out to the (5DH) DISPENSE VALUE command's Y2-Y3.

NOTES:

1) If the dispenser's payout is busy it will respond to the PAYOUT STATUS command with an ACK only.

2) If no coins have been paid out, at least one zero valued data byte must be sent.

3) There is no defined limit on how long the actual payout takes. See dispense command (5DH) for further details

VMC Command	Code	Sub-command	VMC Data	Dispenser Response Data
PAYOUT VALUE POLL	5EH	01H	None	2 bytes: Z1-Z2

Z1 – Z2 = Dispenser Payout Activity - 2 bytes

An interval value (scaled) which indicates the amount of paid out change since the previous PAYOUT VALUE POLL (or between the initial DISPENSE VALUE command (5DH sub command 01H) and the first PAYOUT VALUE POLL).

A 00H response indicates no coins were paid out since the previous PAYOUT VALUE POLL (or the initial DISPENSE VALUE command (5DH sub command 01H)).

An ACK only indicates that the change payout is finished. This should be followed by the PAYOUT STATUS command (5EH-00H) to obtain the complete payout data.

NOTE: The initial intent of this command is to determine the amount of change paid out so that the credit display can be decremented as coins are dispensed.

CSC ServiceWorks – Ex. 1008
Page 230 of 270

VMC Command	Code	Sub-Command	Dispenser Response Data
EXPANSION COMMAND	5FH	00H IDENTIFICATION	33 bytes: Z1 - Z33

Z1 - Z3 = Manufacturer Code - 3 bytes
Identification code for the equipment supplier. Sent as ASCII characters. Currently defined codes are listed in the **EVA** document entitled "***European Vending Association Data Transfer Standard***" (**EVA-DTS**), the Audit Data Lists section, sub-section 2, "Manufacturer Codes".

Z4 - Z15 = Serial Number - 12 bytes

Factory assigned serial number. All bytes must be sent as ASCII characters, zeros (30H) and blanks (20H) are acceptable.

Z16 - Z27 = Model Number - 12 bytes

Manufacturer assigned model number. All bytes must be sent as ASCII characters, zeros (30H) and blanks (20H) are acceptable.

Z28 - Z29 = Software Version - 2 bytes

Current software version. Must be sent in packed BCD.

Z30 - Z33 = Optional Features - 4 bytes

Each of the 32 bits indicate an optional features availability. If the bit is set the feature is available. Bits should be sent in descending order, i.e. bit 31 is sent first and bit 0 is sent last. Currently defined options are:

B0 - File Transport Layer (FTL) supported as defined in Section 2.6.

B1 - B31 Available for future use

VMC Command	Code	Sub-Command	VMC Data
EXPANSION COMMAND	5FH	01H FEATURE ENABLE	4 bytes: Y1 - Y4

CSC ServiceWorks – Ex. 1008
Page 231 of 270

This command is used to enable each of the optional features defined in Z30-Z33 above. To enable a feature a bit is set to one. **All optional features are disabled after reset.**

CSC ServiceWorks – Ex. 1008
Page 232 of 270

VMC Command	Code	Sub-command	VMC Data	Dispenser Response
EXPANSION COMMAND	5FH **FTL**	FAH REQ TO RCV	Y1-Y5	Z1 - Zn (immediate or POLLed)

The VMC is requesting to receive data from the dispenser whose destination address will always be (58H). Note that all FTL Commands / Responses are defined in Section 2.6.

Y1 = Destination address of command (58H)
Y2 = Source address of command
Y3 = File ID
Y4 = Maximum length
Y5 = Control

Z1 = 1DH which indicates SEND BLOCK
Z2 = Destination address of data
Z3 = Block #
Z4 - Z34 = Data (maximum of 31 bytes)

or

Z1 = 1CH which indicates RETRY / DENY
Z2 = Destination address of response
Z3 = Source address of response (58H)
Z4 = Retry delay

VMC Command	Code	Sub-command	VMC Data	Dispenser Response
EXPANSION COMMAND	5FH **FTL**	FBH RETRY / DENY	Y1-Y3	None

The VMC is retrying, denying, or aborting a data transfer to/from the dispenser whose destination address will always be (58H). Note that all FTL Commands / Responses are defined in Section 2.6.

Y1 = Destination address of command (58H)
Y2 = Source address of command
Y3 = Retry delay

CSC ServiceWorks – Ex. 1008
Page 233 of 270

VMC Command	Code	Sub-command	VMC Data	Dispenser Response
EXPANSION COMMAND	5FH	FCH **FTL** SEND BLOCK	Y1-Y33	None

The VMC is sending data to the dispenser whose destination address will always be (58H). Note that all FTL Commands / Responses are defined in Section 2.6.

Y1 = Destination address of command & data (58H)
Y2 = Block #
Y3 - Y33 = Data (maximum of 31 bytes)

VMC Command	Code	Sub-command	VMC Data	Dispenser Response
EXPANSION COMMAND	5FH	FDH **FTL** OK TO SEND	Y1-Y2	Z1-Z34 (immediate or POLLed)

The VMC is indicating that it is OK for the dispenser to transfer data. The destination address will always be the dispenser (58H). Note that all FTL Commands / Responses are defined in Section 2.6.

Y1 = Destination address of command (58H)
Y2 = Source address of command

Z1 = 1DH which indicates SEND BLOCK
Z2 = Destination address of data
Z3 = Source address of data
Z4 - Z34 = Data (maximum of 31 bytes)

CSC ServiceWorks – Ex. 1008
Page 234 of 270

VMC Command	Code	Sub-command	VMC Data	Dispenser Response
EXPANSION COMMAND	5FH	FEH	Y1-Y5	Z1 (immediate or POLLed)
	FTL REQ TO SEND			

The VMC is requesting to send data to the dispenser whose destination address will always be (58H). Note that all FTL Commands / Responses are defined in Section 2.6.

Y1 = Destination address of command (58H)
Y2 = Source address of command
Y3 = File ID
Y4 = Maximum length
Y5 = Control

Z1 = 1EH which indicates OK TO SEND
Z2 = Destination address of response
Z3 = Source address of response (58H)

or

Z1 = 1CH which indicates RETRY / DENY
Z2 = Destination address of response
Z3 = Source address of response (58H)
Z4 = Retry delay

VMC Command	Code	Sub-command	VMC Data	Dispenser Response
EXPANSION COMMAND	5FH	FFH	Y1-Yn	Z1-Zn
	DIAGNOSTICS			

Y1 - Yn = Device manufacturer specific instruction for implementing various manufacturing or test modes. Y1 - Yn implies that any number of bytes can be used for the VMC data to the peripheral.

Z1 - Zn = Device manufacturer specific responses after receiving manufacturing or test instructions. Z1 - Zn implies that any number of bytes can be used for the Dispenser response data from the peripheral.

CSC ServiceWorks – Ex. 1008
Page 235 of 270

10.4 Dispenser Non-Response Time

The default maximum non-response time for the dispenser is 5 seconds. This is the maximum time for which a dispenser will not respond to a command or a POLL with ACK, NAK or a message. The “Application Maximum Response Time” reported in byte Z6 of the SETUP (10.3) supersedes this default value if Z6 is greater.

10.5 Dispenser Power Requirements

The current draw for any dispenser must fall within the following limits. All measurements are at the minimum VMC voltage output.

Idle mode = 200 mA. (max.) continuous

Coin payout = 2.5 A. (max.) for up to 15 seconds per coin dispensed. This is the maximum for all dispensers operating simultaneously in this unit.

Appendix 1

Currency Codes

A1.1 Information

The following **Tables of Codes for the Representation of Currencies and Funds** are provided by the Secretariat of ISO 4217 MA. It is provided here to be used for the MDB currency code information sent between the credit peripherals and the VMC.

Table A.1 Currency and Funds Code List (English alphabetical order by entity)

Table A.2 Funds Codes Registered with the Maintenance Agency

Table A.3 Codes for Historic Denominations of Currencies and Funds

A1.2 MDB/ICP Use

As stated in the individual credit device sections, the two byte, packed BCD country / currency code of the coin changer, bill validator, and card reader devices can be sent in two different forms depending on the value of the left most BCD digit.

If the left most digit is a 0, the International Telephone Code is used to indicate the country that the reader is set-up for.

For example, the USA telephone code is 001 which translates into the MDB code as **00 01**h (Zx = **00**h and Zy = **01**h).

If the left most digit is a 1, the latest version of the ISO 4217 numeric currency code is used as listed in this Appendix.

For example, the code for the US dollar is 840 which translates into the MDB code as **18 40**h (Zx = **18**h and Zy = **40**h).

The code for the Euro is 978 which translates into the MDB code as **1978**h (Zx = **19**h and Zy = **78**h).

FFFFh should be used if the country code in unknown (Zx = **FF**h and Zy = **FF**h).

Note that for level 3 cashless readers, it is mandatory to use the the ISO 4217 numeric currency code.

CSC ServiceWorks – Ex. 1008
Page 237 of 270

Table A.1 Currency and Funds Code List (English alphabetical order by entity)

ENTITY	Currency	Code Alphabetic	Code Numeric	Decimal Position
AFGHANISTAN	Afghani	AFA	004	2
ALBANIA	Lek	ALL	008	2
ALGERIA	Algerian Dinar	DZD	012	2
AMERICAN SAMOA	US Dollar	USD	840	2
ANDORRA	Spanish Peseta	ESP	724	0
	French Franc	FRF	250	2
	Andorran Peseta	ADP	020	0
ANGOLA	New Kwanza	AON	024	2
	Kwanza Reajustado	AOR	982	2
ANGUILLA	East Caribbean Dollar	XCD	951	2
ANTARCTICA	No universal currency			
ANTIGUA AND BARBUDA	East Caribbean Dollar	XCD	951	2
ARGENTINA	Argentine Peso	ARS	032	2
ARMENIA	Armenian Dram	AMD	051	2
ARUBA	Aruban Guilder	AWG	533	2
AUSTRALIA	Australian Dollar	AUD	036	2
AUSTRIA	Schilling	ATS	040	2
AZERBAIJAN	Azerbaijanian Manat	AZM	031	2
BAHAMAS	Bahamian Dollar	BSD	044	2
BAHRAIN	Bahraini Dinar	BHD	048	3
BANGLADESH	Taka	BDT	050	2
BARBADOS	Barbados Dollar	BBD	052	2
BELARUS	Belarussian Ruble	BYB	112	0
	Belarussian Ruble	BYR	974	0
BELGIUM	Belgian Franc	BEF	056	0
BELIZE	Belize Dollar	BZD	084	2
BENIN	CFA Franc BCEAO+	XOF	952	0
BERMUDA	Bermudian Dollar (customarily known as Bermuda Dollar)	BMD	060	2
BHUTAN	Indian Rupee	INR	356	2
	Ngultrum	BTN	064	2

+ CFA Franc BCEAO; Responsible authority: Banque Centrale des Etats de

CSC ServiceWorks – Ex. 1008
Page 238 of 270

l'Afrique de l'Ouest.

CSC ServiceWorks – Ex. 1008
Page 239 of 270

Table A.1 (Continued)

ENTITY	Currency	Code Alphabetic	Code Numeric	Decimal Position
BOLIVIA	Boliviano	BOB	068	2
	Mvdol*	BOV	984	2
BOSNIA & HERZEGOVINA	Convertible Marks	BAM	977	2
BOTSWANA	Pula	BWP	072	2
BOUVET ISLAND	Norwegian Krone	NOK	578	2
BRAZIL	Brazilian Real	BRL	986	2
BRITISH INDIAN OCEAN TERRITORY	US Dollar	USD	840	2
BRUNEI DARUSSALAM	Brunei Dollar	BND	096	2
BULGARIA	Lev	BGL	100	2
	Bulgarian LEV	BGN	975	2
BURKINA FASO	CFA Franc BCEAO+	XOF	952	0
BURUNDI	Burundi Franc	BIF	108	0
CAMBODIA	Riel	KHR	116	2
CAMEROON	CFA Franc BEAC#	XAF	950	0
CANADA	Canadian Dollar	CAD	124	2
CAPE VERDE	Cape Verde Escudo	CVE	132	2
CAYMAN ISLANDS	Cayman Islands Dollar	KYD	136	2
CENTRAL AFRICAN REPUBLIC	CFA Franc BEAC#	XAF	950	0
CHAD	CFA Franc BEAC#	XAF	950	0
CHILE	Chilean Peso	CLP	152	0
	Unidades de fomento*	CLF	990	0
CHINA	Yuan Renminbi	CNY	156	2
CHRISTMAS ISLAND	Australian Dollar	AUD	036	2
COCOS (KEELING) ISLANDS	Australian Dollar	AUD	036	2
COLOMBIA	Colombian Peso	COP	170	2
COMOROS	Comoro Franc	KMF	174	0

\+ CFA Franc BCEAO; Responsible authority: Banque Centrale des Etats de l'Afrique de l'Ouest.

\# CFA Franc BEAC; Responsible authority: Banque des Etats de l'Afrique Centrale.

- Funds code [See table A.2(E) for definitions of funds types].

CSC ServiceWorks – Ex. 1008
Page 240 of 270

Table A.1 (Continued)

ENTITY	Currency	Code Alphabetic	Code Numeric	Decimal Position
CONGO	CFA Franc BEAC#	XAF	950	0
CONGO, THE DEMOCRATIC REPUBLIC OF	Franc Congolais	CDF	976	2
COOK ISLANDS	New Zealand Dollar	NZD	554	2
COSTA RICA	Costa Rican Colon	CRC	188	2
COTE D'IVOIRE	CFA Franc BCEAO+	XOF	952	0
CROATIA	Kuna	HRK	191	2
CUBA	Cuban Peso	CUP	192	2
CYPRUS	Cyprus Pound	CYP	196	2
CZECH REPUBLIC	Czech Koruna	CZK	203	2
DENMARK	Danish Krone	DKK	208	2
DJIBOUTI	Djibouti Franc	DJF	262	0
DOMINICA	East Caribbean Dollar	XCD	951	2
DOMINICAN REPUBLIC	Dominican Peso	DOP	214	2
EAST TIMOR	Timor Escudo	TPE	626	0
	Rupiah	IDR	360	2
ECUADOR	US Dollar	ESD	840	2
EGYPT	Egyptian Pound	EGP	818	2
EL SALVADOR	El Salvador Colon	SVC	222	2
EQUATORIAL GUINEA	CFA Franc BEAC#	XAF	950	0
ESTONIA	Kroon	EEK	233	2
ERITREA	Nakfa	ERN	232	2
ETHIOPIA	Ethiopian Birr	ETB	230	2
FAEROE ISLANDS	Danish Krone	DKK	208	2
FALKLAND ISLANDS (MALVINAS)	Falkland Islands Pound	FKP	238	2

CFA Franc BEAC; Responsible authority: Banque des Etats de l'Afrique Centrale.

+ CFA Franc BCEAO; Responsible authority: Banque Centrale des Etats de l'Afrique de l'Ouest.

* Funds code [see Table A.2 (E) for definitions of funds types].

CSC ServiceWorks – Ex. 1008
Page 241 of 270

Table A.1 (Continued)

ENTITY	Currency	Code	Decimal	
		Alphabetic	Numeric	Position
FIJI	Fiji Dollar	FJD	242	2
FINLAND	Markka	FIM	246	2
FRANCE	French Franc	FRF	250	2
FRENCH GUIANA	French Franc	FRF	250	2
FRENCH POLYNESIA	CFP Franc	XPF	953	0
FRENCH SOUTHERN TERRITORIES	French Franc	FRF	250	2
GABON	CFA Franc BEAC#	XAF	950	0
GAMBIA	Dalasi	GMD	270	2
GEORGIA	Lari	GEL	981	2
GERMANY	Deutsche Mark	DEM	276	2
GHANA	Cedi	GHC	288	2
GIBRALTAR	Gibraltar Pound	GIP	292	2
GREECE	Drachma	GRD	300	2
GREENLAND	Danish Krone	DKK	208	2
GRENADA	East Caribbean Dollar	XCD	951	2
GUADELOUPE	French Franc	FRF	250	2
GUAM	US Dollar	USD	840	2
GUATEMALA	Quetzal	GTQ	320	2
GUINEA	Guinea Franc	GNF	324	0
GUINEA-BISSAU	Guinea-Bissau Peso	GWP	624	2
	CFA Franc BCEAO+	XOF	952	0
GUYANA	Guyana Dollar	GYD	328	2
HAITI	Gourde	HTG	332	2
	US Dollar	USD	840	2
HEARD AND MCDONALD ISLANDS	Australian Dollar	AUD	036	2
HONDURAS	Lempira	HNL	340	2

CFA Franc BEAC; Responsible authority: Banque des Etats de l'Afrique Centrale.

+ CFA Franc BCEAO; Responsible authority: Banque Centrale des Etats de l'Afrique de l'Ouest.

CSC ServiceWorks – Ex. 1008
Page 242 of 270

Table A.1 (Continued)

ENTITY	Currency	Code	Decimal	
		Alphabetic	Numeric	Point
HONG KONG	Hong Kong Dollar	HKD	344	2
HUNGARY	Forint	HUF	348	2
ICELAND	Iceland Krona	ISK	352	2
INDIA	Indian Rupee	INR	356	2
INDONESIA	Rupiah	IDR	360	2
INTERNATIONAL MONETARY FUND (IMF)**	SDR	XDR	960	N.A.
IRAN (ISLAMIC REPUBLIC OF)	Iranian Rial	IRR	364	2
IRAQ	Iraqi Dinar	IQD	368	3
IRELAND	Irish Pound	IEP	372	2
ISRAEL	New Israeli Sheqel*	ILS	376	2
ITALY	Italian Lira	ITL	380	0
JAMAICA	Jamaican Dollar	JMD	388	2
JAPAN	Yen	JPY	392	0
JORDAN	Jordanian Dinar	JOD	400	3
KAZAKHSTAN	Tenge	KZT	398	2
KENYA	Kenyan Shilling	KES	404	2
KIRIBATI	Australian Dollar	AUD	036	2
KOREA, DEMOCRATIC PEOPLE'S REPUBLIC OF	North Korean Won	KPW	408	2
KOREA, REPUBLIC OF	Won	KRW	410	0

* Currency name was effective 4th September 1985

** This entry is not derived fron ISO 3166, but is included here in alphabetic sequence for convenience.

CSC ServiceWorks – Ex. 1008
Page 243 of 270

Table A.1 (Continued)

ENTITY	Currency	Code Alphabetic	Code Numeric	Decimal Point
KUWAIT	Kuwaiti Dinar	KWD	414	3
KYRGYZSTAN	Som	KGS	417	2
LAO PEOPLE'S DEMOCRATIC REPUBLIC	Kip	LAK	418	2
LATVIA	Latvian Lats	LVL	428	2
LEBANON	Lebanese Pound	LBP	422	2
LESOTHO	Rand	ZAR	710	2
	(financial Rand)*	ZAL	991	2
	Loti	LSL	426	2
LIBERIA	Liberian Dollar	LRD	430	2
LIBYAN ARAB JAMAHIRIYA	Libyan Dinar	LYD	434	3
LIECHTENSTEIN	Swiss Franc	CHF	756	2
LITHUANIA	Lithuanian Litas	LTL	440	2
LUXEMBOURG	Luxembourg Franc	LUF	442	0
MACAU	Pataca	MOP	446	2
MACEDONIA, THE FORMER YUGOSLAV REPUBLIC OF	Denar	MKD	807	2
MADAGASCAR	Malagasy Franc	MGF	450	0
MALAWI	Kwacha	MWK	454	2
MALAYSIA	Malaysian Ringgit	MYR	458	2
MALDIVES	Rufiyaa	MVR	462	2
MALI	CFA Franc BCEAO+	XOF	952	0
MALTA	Maltese Lira	MTL	470	2
MARSHALL ISLANDS	US Dollar	USD	840	2
MARTINIQUE	French Franc	FRF	250	2
MAURITANIA	Ouguiya	MRO	478	2
MAURITIUS	Mauritius Rupee	MUR	480	2
MEXICO	Mexican Peso	MXN	484	2
	Mexican Unidad de Inversion (UDI)*	MXV	979	2
MICRONESIA	US Dollar	USD	840	2
MOLDOVA, REPUBLIC OF	Moldovan Leu	MDL	498	2
MONACO	French Franc	FRF	250	2

* Funds code [See table A.2(E) for definitions of funds types].

\+ CFA Franc BCEAO; Responsible authority: Banque Centrale des Etats de l'Afrique de l'Ouest.

Table A.1 (Continued)

CSC ServiceWorks – Ex. 1008
Page 244 of 270

ENTITY	Currency	Code Alphabetic	Code Numeric	Decimal Point
MONGOLIA	Tugrik	MNT	496	2
MONTSERRAT	East Caribbean Dollar	XCD	951	2
MOROCCO	Moroccan Dirham	MAD	504	2
MOZAMBIQUE	Metical	MZM	508	2
MYANMAR	Kyat	MMK	104	2
NAMIBIA	Rand	ZAR	710	2
	Namibia Dollar**	NAD	516	2
NAURU	Australian Dollar	AUD	036	2
NEPAL	Nepalese Rupee	NPR	524	2
NETHERLANDS	Netherlands Guilder	NLG	528	2
NETHERLANDS ANTILLES	Netherlands Antillian Guilder	ANG	532	2
NEW CALEDONIA	CFP Franc	XPF	953	0
NEW ZEALAND	New Zealand Dollar	NZD	554	2
NICARAGUA	Cordoba Oro	NIO	558	2
NIGER	CFA Franc BCEAO+	XOF	952	0
NIGERIA	Naira	NGN	566	2
NIUE	New Zealand Dollar	NZD	554	2
NORFOLK ISLAND	Australian Dollar	AUD	036	2
NORTHERN MARIANA ISLANDS	US Dollar	USD	840	2
NORWAY	Norwegian Krone	NOK	578	2
OMAN	Rial Omani	OMR	512	3
PAKISTAN	Pakistan Rupee	PKR	586	2
PALAU	US Dollar	USD	840	2

\+ CFA Franc BCEAO; Responsible authority: Banque Centrale des Etats de l'Afrique de l'Ouest.

\# The lowest unit of recorded value for the Iraqi Dinar is the Dirham (1 Iraqi Dinar = 20 Dirhams).

** The Namibia Dollar becomes effective September 15th 1993

Table A.1 (Continued)

CSC ServiceWorks – Ex. 1008
Page 245 of 270

ENTITY	Currency	Code Alphabetic	Code Numeric	Decimal Point
PANAMA	Balboa	PAB	590	2
	US Dollar	USD	840	2
PAPUA NEW GUINEA	Kina	PGK	598	2
PARAGUAY	Guarani	PYG	600	0
PERU	Nuevo Sol	PEN	604	2
PHILIPPINES	Philippine Peso	PHP	608	2
PITCAIRN	New Zealand Dollar	NZD	554	2
POLAND	Zloty	PLN	985	2
PORTUGAL	Portuguese Escudo	PTE	620	0
PUERTO RICO	US Dollar	USD	840	2
QATAR	Qatari Rial	QAR	634	2
REUNION	French Franc	FRF	250	2
ROMANIA	Leu	ROL	642	2
RUSSIAN FEDERATION	Russian Ruble	RUR	810	2
	Russian Ruble	RUB	643	2
RWANDA	Rwanda Franc	RWF	646	0
ST HELENA	St Helena Pound	SHP	654	2
ST KITTS - NEVIS	East Caribbean Dollar	XCD	951	2
SAINT LUCIA	East Caribbean Dollar	XCD	951	2
ST PIERRE AND MIQUELON	French Franc	FRF	250	2
SAINT VINCENT AND THE GRENADINES	East Caribbean Dollar	XCD	951	2
SAMOA	Tala	WST	882	2
SAN MARINO	Italian Lira	ITL	380	0
SAO TOME AND PRINCIPE	Dobra	STD	678	2
SAUDI ARABIA	Saudi Riyal	SAR	682	2

CSC ServiceWorks – Ex. 1008
Page 246 of 270

Table A.1 (Continued)

ENTITY	Currency	Code Alphabetic	Code Numeric	Decimal Point
SENEGAL	CFA Franc BCEAO+	XOF	952	0
SEYCHELLES	Seychelles Rupee	SCR	690	2
SIERRA LEONE	Leone	SLL	694	2
SINGAPORE	Singapore Dollar	SGD	702	2
SLOVAKIA	Slovak Koruna	SKK	703	2
SLOVENIA	Tolar	SIT	705	2
SOLOMON ISLANDS	Solomon Islands Dollar	SBD	090	2
SOMALIA	Somali Shilling	SOS	706	2
SOUTH AFRICA	Rand	ZAR	710	2
SPAIN	Spanish Peseta	ESP	724	0
SRI LANKA	Sri Lanka Rupee	LKR	144	2
SUDAN	Sudanese Dinar	SDD	736	2
SURINAME	Surinam Guilder	SRG	740	2
SVALBARD AND JAN MAYEN ISLANDS	Norwegian Krone	NOK	578	2
SWAZILAND	Lilangeni	SZL	748	2
SWEDEN	Swedish Krona	SEK	752	2
SWITZERLAND	Swiss Franc	CHF	756	2
SYRIAN ARAB REPUBLIC	Syrian Pound	SYP	760	2
TAIWAN, PROVINCE OF CHINA	New Taiwan Dollar	TWD	901	2
TAJIKISTAN	Tajik Ruble	TJR	762	0

+ CFA Franc BCEAO; Responsible authority: Banque Centrale des Etats de l'Afrique de l'Ouest.

CSC ServiceWorks – Ex. 1008
Page 247 of 270

Table A.1 (Continued)

ENTITY	Currency	Code Alphabetic	Code Numeric	Decimal Point
TANZANIA, UNITED REPUBLIC OF	Tanzanian Shilling	TZS	834	2
THAILAND	Baht	THB	764	2
TOGO	CFA Franc BCEAO+	XOF	952	0
TOKELAU	New Zealand Dollar	NZD	554	2
TONGA	Pa'anga	TOP	776	2
TRINIDAD AND TOBAGO	Trinidad and Tobago Dollar	TTD	780	2
TUNISIA	Tunisian Dinar	TND	788	3
TURKEY	Turkish Lira	TRL	792	0
TURKMENISTAN	Manat	TMM	795	2
TURKS AND CAICOS ISLANDS	US Dollar	USD	840	2
TUVALU	Australian Dollar	AUD	036	2
UGANDA	Uganda Shilling ++	UGX	800	0
UKRAINE	Hryvnia	UAH	980	2
UNITED ARAB EMIRATES	UAE Dirham	AED	784	2
UNITED KINGDOM	Pound Sterling	GBP	826	2
UNITED STATES	US Dollar	USD	840	2
	(Same day)*	USS	998	2
	(Next day)*	USN	997	2
UNITED STATES MINOR OUTLAYING ISLANDS	US Dollar	USD	840	2

+ CFA Franc BCEAO; Responsible authority: Banque Centrale des Etats de l'Afrique de l'Ouest.

++ The Uganda Shilling was denominated as from 18 May 1987.

* Funds code [See table A.2(E) for definitions of funds types].

CSC ServiceWorks – Ex. 1008
Page 248 of 270

Table A.1 (Continued)

ENTITY	Currency	Code		Decimal
		Alphabetic	Numeric	Point
URUGUAY	Peso Uruguayo	UYU	858	2
UZBEKISTAN	Uzbekistan Sum	UZS	860	2
VANUATU	Vatu	VUV	548	0
VATICAN CITY STATE (HOLY SEE)	Italian Lira	ITL	380	0
VENEZUELA	Bolivar	VEB	862	2
VIETNAM	Dong	VND	704	2
VIRGIN ISLANDS (BRITISH)	US Dollar	USD	840	2
VIRGIN ISLANDS (U.S.)	US Dollar	USD	840	2
WALLIS AND FUTUNA ISLANDS	CFP Franc	XPF	953	0
WESTERN SAHARA	Moroccan Dirham	MAD	504	2
YEMEN	Yemeni Rial	YER	886	2
YUGOSLAVIA	New Dinar	YUM	891	2
ZAMBIA	Kwacha	ZMK	894	2
ZIMBABWE	Zimbabwe Dollar	ZWD	716	2

CSC ServiceWorks – Ex. 1008
Page 249 of 270

Table A.1 (Continued)

ENTITY	Currency	Code	Decimal Alphabetic	Decimal Numeric	Decimal Position
Entity not applicable	Gold		XAU	959	N.A.
	Bond Markets Units				
	European Composite Unit (EURCO)		XBA	955	N.A.
	European Monetary Unit (E.M.U.-6)***		XBB	956	N.A.
	European Unit of Account 9 (E.U.A.- 9)		XBC	957	N.A.
	European Unit of Account 17 (E.U.A.- 17)		XBD	958	N.A.
	Palladium		XPD	964	N.A.
	Platinum		XPT	962	N.A.
	Silver		XAG	961	N.A.

*** E.M.U.-6 is sometimes known as the European Currency Unit. This should not be confused with the settlement unit of the European Monetary Cooperation Fund (E.M.C.F.) which has the same name (see entry for 'European Monetary Cooperation Fund' in this table).

CSC ServiceWorks – Ex. 1008
Page 250 of 270

Table A.1 (Continued)

ENTITY	Currency	Code Alphabetic	Code Numeric	Decimal Position
Entity not applicable	Special settlement currencies			
	UIC-Franc	XFU	Nil	N.A.
	Gold-Franc	XFO	Nil	N.A.
	Codes specifically reserved for testing purposes	XTS	963	N.A.
	The codes assigned for transactions where no currency is involved are:	XXX	999	N.A.
	euro*	EUR*	978	2

* On 1 January 1999, the euro will become the currency of those Member States of the European Union which adopt the single currency in accordance with the Treaty establishing the European Community. This code has been issued now so that technical preparations can be started. The code element "EU" has been reserved by the ISO 3166 Maintenance Agency for use within ISO 4217 where "R" has been appended to make an acceptable mnemonic code.

CSC ServiceWorks – Ex. 1008
Page 251 of 270

Table A.2 Funds Codes Registered with the Maintenance Agency

CURRENCY AUTHORITY	Currency	Fund Type	Code Alphabetic	Code Numeric	Decimal Position
BOLIVIA		Mvdol	BOV	984	2
CHILE		Unidades de Fomento	CLF	990	0
MEXICO		Mexican Unidad de Inversion (UDI)	MXV	979	2
UNITED STATES	US Dollar	Same day	USS	998	2
		Next day	USN	997	2

Definitions of the fund types listed above

BOV: For indexation purposes and denomination of certain finacial instruments (ex. treasury bills). The Mvdol is set daily by the Central Bank of Bolivia based upon the official USD/BOB rate.

CLF: This development unit has been approved by the Chilean government for use in insurance transactions (with effect from 10 April 1980).

ECV: A daily indexation mechanism set by the Ecuadorian Central Bank. The UVC is set according to the variation of the Consumer price Index (Urban), as compiled by the National Census and Statistics Institute (INEC).

MXV : The UDI is an inflation adjusted mechanism set by the Central Bank of Mexico according to the variation in the Mexican Consumer Price Index. The value of the UDI is expressed in terms of Mexican Pesos per UDI. It is used to denominate mortgage loans, some bank deposits with maturities of 3 month or more and Government bonds (UDIBONOS).

USN: "Next day" funds are immediately available for transfer in like funds, and subject to settlement, available the next business day for same day funds transfer or withdrawal in cash.

USS: "Same day" funds are immediately available for transfer today or for withdrawal in cash, subject to the settlement of the transaction through the payment mechanism used.

(USD designates the US Dollar, the currency designator when an accumlation of amounts contains more than one funds type.)

CSC ServiceWorks – Ex. 1008
Page 252 of 270

Table A.3 Codes for Historic Denomination of Currencies and Funds

ENTITY	Historic Currencies	Code	Numeric	WD
ALBANIA	Old Lek	ALK *	-	12/89
ANGOLA	Kwanza	AOK	-	03/91
ARGENTINA	Peso Argentino	ARP	-	07/85
	Austral	ARA	-	01/92
	Peso	ARY*	-	
1989/1990				
BELGIUM	Convertible Franc	BEC	993	03/90
	Financial Franc	BEL	992	03/90
BOLIVIA	Peso	BOP	-	02/87
BOSNIA & HERZEGOVINA	Dinar	BAD	070	09/97
BRAZIL	Cruzeiro	BRB	-	03/86
	Cruzado	BRC	-	02/89
	New Cruzado	BRN	-	03/90
	Cruzeiro	BRE	076	08/93
	Cruzeiro Real	BRR	987	07/94
BULGARIA	Lev A/62	BGK*	-	
1989/1990				
	Lev A/52	BGJ*	-	
1989/1990				
BURMA#	N/A	BUK	-	02/90
CHINA	Peoples Bank Dollar	CNX*	-	12/89
CROATIA	Dinar	HRD	-	01/95
CZECHOSLOVAKIA	Krona A/53	CSJ*	-	1989/1990
	Koruna	CSK	200	03/93
ECUADOR	Sucre	ECS	218	9/00
	Unidad del Valor constante (UVC)*	ECV	983	9/00
EQUATORIAL GUINEA	Ekwele	GQE	226	06/86

Ekwele	EQE*	-	12/89

* Non ISO code
# Change in country name

CSC ServiceWorks – Ex. 1008
Page 254 of 270

Table 3 (Continued)

ENTITY	Historic Currencies	Code	Numeric	WD
EUROPEAN MONETARY COOPERATION FUND (EMCF)**	European Currency Unit (E.C.U)	XEU	954	01/99
GERMAN DEMOCRATIC REPUBLIC	Mark der DDR	DDM	278	07/90 to 09/90
GEORGIA	Georgian Coupon	GEK	268	10/95
GUINEA	Syli	GNS	-	02/86
	Syli	GNE*	-	12/89
GUINEA BISSAU Between 1978-	Guinea Escudo	GWE	-	1981
ICELAND 1989/1990	Old Krona	ISJ*	-	
ISRAEL 1989/1990	Old Shekel	ILR*	-	
Between 1978-	Pound	ILP	-	1981
LESOTHO	Maloti	LSM	-	05/85
LAO	Kip Pot Pol	LAJ*	-	12/89
LATVIA	Latvian Ruble	LVR	-	12/94
LITHUANIA	Talonas	LTT	-	07/93
LUXEMBOURG	Convertible Franc	LUC	989	03/90
	Financial Franc	LUL	988	03/90
MALDIVES	Maldive Rupee	MVQ*	-	12/89
MALI	Mali Franc	MAF*	-	12/89
		MLF	446	11/84
MALTA	Maltese Pound	MTP	-	06/83
MEXICO	Mexican Peso	MXP	-	01/93

* Non ISO code

Table 3 (Continued)

ENTITY	Historic Currencies	Code	Numeric	WD
MOZAMBIQUE Between 1978-	Mozambique Escudo	MZE	-	1981
NICARAGUA	Cordoba	NIC	-	10/90
PERU	Sol	PES	-	02/86
	Inti	PEI	-	07.91
1989/1990	Sol	PEH*	-	
POLAND	Zloty	PLZ	616	01/97
ROMANIA 1989/1990	Leu A/52	ROK*	-	
SOUTH AFRICA	Financial Rand	ZAL	991	03/95
SOUTHERN RHODESIA# Between 1978- 1981	Rhodesian Dollar	RHD	-	
SPAIN Between 1981-	Spanish Peseta	ESA	996	
	("A" Account)			1983
	(convertible Peseta Accounts)	ESB	995	12/94
SUDAN	Sudanese Pound	SDP	-	06/98
UNION OF SOVIET SOCIALIST REPUBLICS#	Rouble	SUR	-	12/90
YEMEN, DEMOCRATIC OF	Yemeni Dinar	YDD	720	09/91
UGANDA	Uganda Shilling	UGS	-	05/87
1989/1990	Old Shilling	UGW*	-	

CSC ServiceWorks – Ex. 1008
Page 256 of 270

UKRAINE	Karbovanet	UAK	804	09/96

* Non ISO code
# Change in country name.

CSC ServiceWorks – Ex. 1008
Page 257 of 270

Table 3 (Continued)

ENTITY	Historic Currencies	Code	Numeric	WD
URUGUAY	Old Uruguay Peso	UYN*	-	12/89
	Uruguayan Peso	UYP	-	03/93
VIETNAM 1989/1990	Old Dong	VNC*	-	
YUGOSLAVIA	New Yugoslavian Dinar	YUD	-	01/90
	Yugoslavian Dinar	YUN	890	11/95
ZAIRE	Zaire	ZRZ	-	02/94
	New Zaire	ZRN	180	06/99
ZIMBABWE	Rhodesian Dollar	ZWC*	-	12/89
ENTITY AND CURRENCY NOT APPLICABLE	RINET Funds Code	XRE	N/A	11/99

* Non ISO code

CSC ServiceWorks – Ex. 1008
Page 258 of 270

ANNEX

INFORMATION TO BE PROVIDED BY THOSE MAKING APPLICATION FOR THE ISSUE OF NEW CODES, AMENDMENTS AND DELETIONS.

Applications for additions or changes to the code lists are acceptable from any source. However, on order to ensure rapid processing by the Secretaries, the information required from applicants has been laid down as follows:

(a) Name of entity

(b) Name of currency

(c) The institution responsible for the currency (name and place of operation).

(d) Requirements:

(1) Whether currency or funds code: if funds code, give definition and proposed use;

(2) If new code, make proposal;

(3) If revision, state existing code and make proposal;

(4) If deletion, indicate code to be deleted;

(e) Reason for application;

(f) Evidence of support (currency code only);

(g) Date of implementation (indicate if special conditions of urgency apply);

(h) Application submitted by (name, address, telephone, telex numbers, etc, of applicant);

(i) Date of application.

Applications should be addressed to

Miss A M Wadsworth Tel. (0181) 996 7466 National
Secretariat for ISO4217MA +44 181 996 7466 International
BSI
389 Chiswick High Road Fax (0181) 996 7466 National
London +44 181 996 7466 International
W4 4AL United Kingdom

CSC ServiceWorks – Ex. 1008
Page 259 of 270

Appendix 2

Battery Operated Card Reader

A2.1 Special Application

The Battery Operated Card Reader described below is a special application of the MDB/ICP specification (non-standard) and is not sanctioned by NAMA. It is provided here to document an application that exists in use today.

A2.2 Extension to MDB/ICP – Card Reader Using Standby Feature

Some Vending machines use battery operated equipment. According to this feature, these machines and all devices used within these machines must provide a standby operating mode.

During standby operation - necessary for saving battery power while the machine is not in use - all devices shall consume a minimum standby current. Any device is equipped with some hardware wake-up mechanism. Both standby current and wake-up mechanism is to be defined in the device related hardware specification.

After wake-up, a device uses normal operating current, until a defined shutdown sequence is established and the device enters standby mode again.

The following specification shows the extensions and procedures for a normal MDB/ICP card reader and VMC-controller necessary to do wake-up and shut down sequences. The hardware specification related to wake-up is a separate BDTA-document. To understand the following details, it is necessary to know, that a separate bi-directional wake-up pin is applied to the card-reader. Pulling the wake-up line (from the card-reader while a card is inserted), both card-reader and VMC will be brought to normal operation mode.

CSC ServiceWorks – Ex. 1008
Page 260 of 270

A2.3 Extension to MDB/ICP – SETUP Config Data

SETUP (11H)	Config Data (00H) Y1	VMC Feature Level Y2	Columns on Display Y3	Rows on Display Y4	Display Info Y5

Y1 : Configuration data.
VMC is sending its configuration data to reader.

Y2 : VMC Feature Level.
Indicates the feature level of the VMC. The available feature levels are:

01 - The VMC is not capable or will not perform the advanced features as specified in Table 1: COMMANDS & RESPONSES following Section 7.3.2. The reader will not provide advanced information to the VMC, but can do the advanced features internally (transparently to the VMC). The reader has no revaluation capability.

02 - The VMC is capable and willing to perform the advanced features as specified in Table 1: COMMANDS & RESPONSES following Section 7.3.2. The reader will provide advanced information to the VMC (if possible) and will not do the advanced features internally.

03 - The VMC is able to support level 02, but also supports some or all of the optional features listed in the EXPANSION ID command (i.e., file transfer, 32 bit credit, multi-currency / language features, negative vend, and / or data entry).

81H: VMC is Level 01, but battery operated.
82H: VMC is Level 02, but battery operated.
83H: VMC is Level 03, but battery operated.

Y3 : Columns on Display. The number of columns on the display. Set to 00H if the display is not available to the reader.

Y4 : Rows on Display.
The number of rows on the display.

Y5 : Display Information - xxxxxyyy

xxxxx =	Unused
yyy =	Display type
000 :	Numbers, upper case letters, blank and decimal point.
001 :	Full ASCII
010-111:	Unassigned

Reader Config Data (01H) Z1	Reader Feature Level Z2	Country / Currency Code High Z3	Country / Currency Code Low Z4	Scale Factor Z5	Decimal Places Z6	Application Maximum Response Time Z7	Miscellaneous Options Z8

Z1 : READER - Configuration data.
Indicates the payment media reader is responding to a SETUP - Configuration data request from the VMC.

Z2 : Reader Feature Level.
Indicates the feature level of the reader. Currently feature levels are:

01 - The reader is not capable or will not perform the advanced features as specified in Table 1: COMMANDS & RESPONSES following Section 7.3.2. The reader will not provide advanced information to the VMC, but can do the advanced features internally (transparently to the VMC). The reader has no revaluation capability.

02 - The reader is capable and willing to perform the advanced features as specified in Table 1: COMMANDS & RESPONSES following Section 7.3.2. The reader will provide advanced information to the VMC (if possible) and will not do the advanced features internally.

03 - The reader is able to support level 02, but also supports some or all of the optional features listed in the EXPANSION ID command (i.e., file transfer, 32 bit credit, multi-currency / language features, negative vend, and / or data entry).

80H: This bit is additionally set, if the reader is capable to work in battery operation mode and should be compared with the VMC against its own working mode. This is also done from the reader against the VMCs request in Y2.

Z3-Z4 : Country / Currency Code - packed BCD.
The packed BCD country / currency code of the changer can be sent in two different forms depending on the value of the left most BCD digit.

If the left most digit is a 0, the International Telephone Code is used to indicate the country that the changer is set-up for. For example, the USA code is 00 01H (Z3 = 00 and Z4 = 01).

If the left most digit is a 1, the latest version of the ISO 4217 numeric currency code is used (see Appendix A1). For example, the code for the US dollar is 18 40H (Z2 = 18 and Z3 = 40) and for the Euro is 1978 (Z3 = 19 and Z4 = 78). Use FFFFh if the country code in unknown.

For level 3 cashless readers, it is mandatory to use the ISO 4217 numeric currency code (see Appendix A1).

Z5 : Scale Factor.
The multiplier used to scale all monetary values transferred between the VMC and the reader.

Z6 : Decimal Places.
The number of decimal places used to communicate monetary values between the VMC and the payment media reader.

All pricing information sent between the VMC and the payment media reader is scaled using the scale factor and decimal places. This corresponds to:

$$\text{ActualPrice} = P \cdot X \cdot 10^{-Y}$$

where P is the scaled value send in the price bytes, and X is the scale factor, and Y is the number of decimal places. For example if there are 2 decimal places and the scale factor is 5, then a scaled price of 7 will mean an actual of 0.35.

Z7 : Application Maximum Response Time - seconds.
The maximum length of time a reader will require to provide a response to any command from the VMC. The value reported here supercedes the payment reader's default NON-RESPONSE time defined in section 7.5 if the value reported here is greater.

Z8 : Miscellaneous Options - xxxxyyyy

xxxx:	Unused (must be set to 0)
yyyy:	Option bits
b0=0:	The payment media reader is NOT capable of restoring funds to the user's payment media or account. Do not request refunds.
b0=1:	The payment media reader is capable of restoring funds to the user's payment media or account. Refunds may be requested.
b1=0:	The payment media reader is NOT multivend capable. Terminate session after each vend.
b1=1:	The payment media reader is multivend capable. Multiple items may be purchased within a single session.
b2=0:	The payment media reader does NOT have a display.
b2=1:	The payment media reader does have its own display.
b3=0:	The payment media reader does NOT support the VEND/CASH SALE subcommand.
b3=1:	The payment media reader does support the VEND/CASH SALE subcommand.
b4-b7=0	Any future options must be covered by the EXPANSION COMMAND option bits.

CSC ServiceWorks – Ex. 1008
Page 263 of 270

Note: The following changes are the only changes to upgrade to battery operated readers:

If a VMC is battery operated, it signals the card reader with the flag 80H to work in battery operation mode. Within byte Z2 the reader also sets the flag to 80H to signal standby feature capability.

If only one of both is in standby capability, this results in an configuration error and the manufacturers should deal with handling of this condition. Assume that at least one device will not enter standby mode and therefore battery lifetime is dramatically reduced!

A2.4 VMC-Reader Operation Sequences

The VMC and the Reader should operate during battery mode in the following way:

After wake-up, the VMC starts with the normal sequences:

Reset
Setup/Config
MAX/MIN-price
Identify
Enable
Poll

During these sequences, the VMC has two possibilities to signal the Card-Reader, not to enter standby-mode again:

Pulling the wake-up pin to low level
Running poll sequences in continuos timing.

If neither the wake-up pin is driven low, nor any command is further sent to the card reader, the reader enters standby state after its Application Maximum Response Time (normally defined to 5 sec in ICP, but sent in byte Z7 of status response)

During card operation, the sequences continue normally with

Begin Session

CSC ServiceWorks – Ex. 1008
Page 264 of 270

Vend Request
Vend Accepted
Vend Success
Cancel Session/Session Complete

Whenever a cancel session or session complete command is received, the reader should stop all internal work after a defined timeout period (Application Maximum Response Time) is finished after the last command sequence and after the wake-up pin is not pulled low.

The VMC should stop polling after the cancel session or session complete command and additionally should no longer pull wake-up pin.

If even the reader or the VMC may wish any further communication (i.e. for additionally trailing display messages or multi vend purposes or etc.) the reader can use any non idle answer to the poll command (i.e. the display message) whereas the VMC can continue polling or pulling the wake-up pin.

Note that the wake-up pin may not be used from the reader to hold on operation, cause dynamic system consideration and of course holding more devices within the system in normal operation mode is not a good job.

The reader should be in a power saving mode after this timeout period where power consumption is less than 10 uA.

To allow the reader holding VMC operating, at least 5 poll have to be sent, after the cancel session or session complete. If any one of these polls is answered different with only a ACK, 5 polls have to be sent again. Note, that if a display message is sent, display time is added!

If the reader entered standby state, and a new card is inserted, the procedure starts a again.

Whenever during this next session, the reader should avoid all unnecessary work, i.e. display messages like „reader xyz, Software version 99.4711“ or „checking RAM“ and so on should be avoided. While in battery operation, the user has inserted a card and is waiting for display of his fund, to continue with a vend and is not interested in service related messages.

CSC ServiceWorks – Ex. 1008
Page 265 of 270

A2.5 Session Example

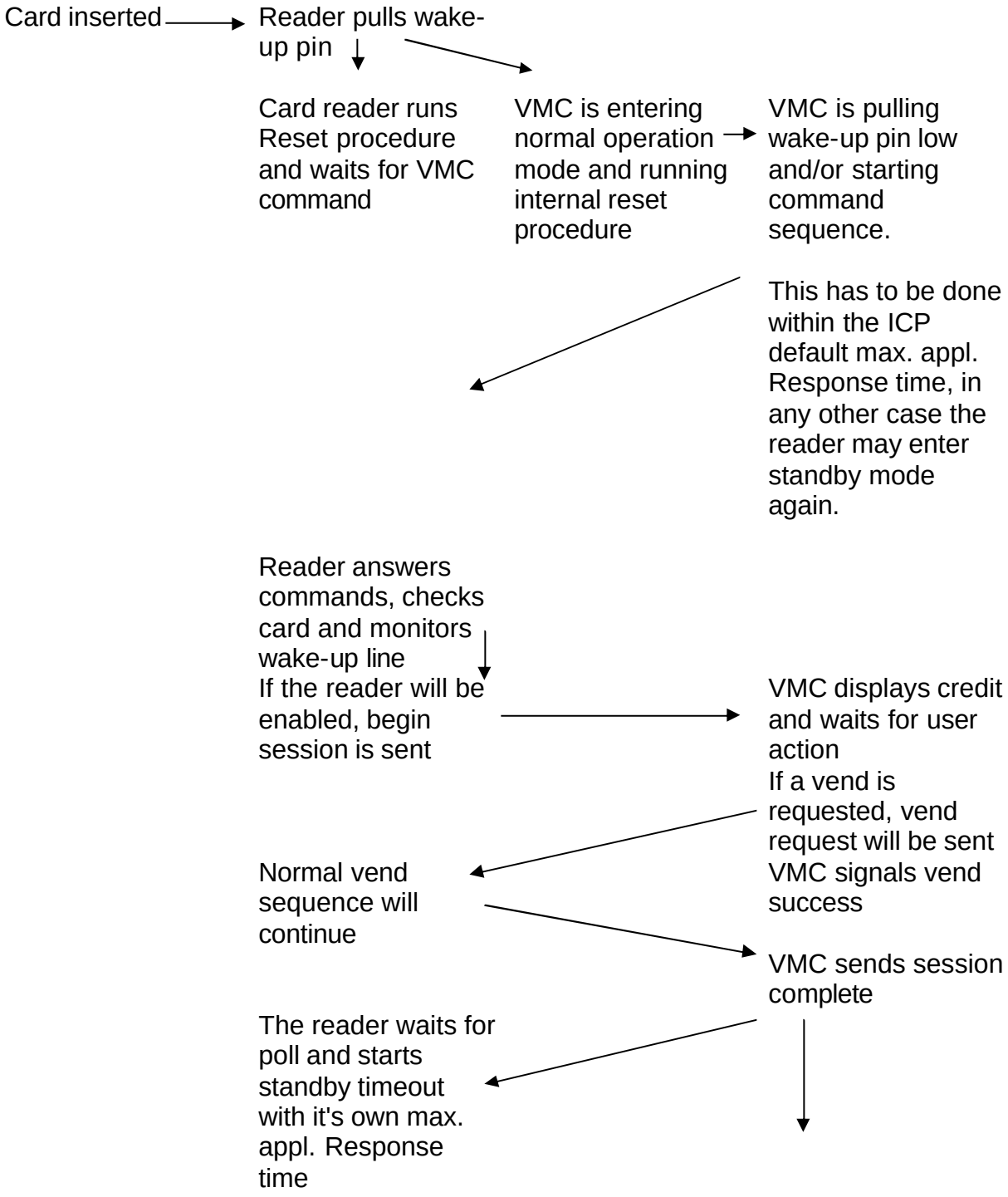

CSC ServiceWorks – Ex. 1008
Page 266 of 270

VMC sends at least five polls and stops pulling the wake-up line

The reader sends a display request with a duration of 10 sec for a finishing thank you message.

VMC displays messages for 10 sec, and polls during these 10 sec. After the 10 sec have elapsed, additionally 5 poll will be sent

CSC ServiceWorks – Ex. 1008
Page 267 of 270

A2.6 Hardware Considerations

Hardware Considerations

Within this special battery operation, the pin 3 of MDB/ICP connector is used as a wake-up signal. Refer to special BDTA-hardware specification.

To show an example of the timing for this pin, refer to the following diagram, which gives an example of all special timing problems related to more than one wake-up condition.

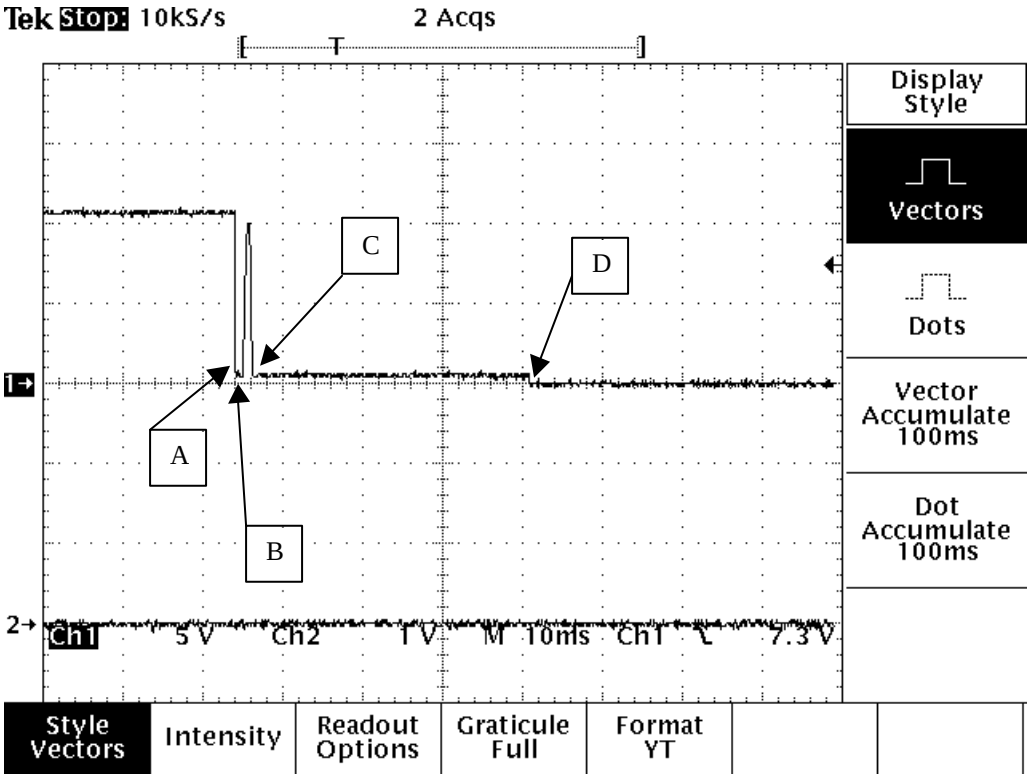

Position A: mechanical switch on VMC is pulling pin 3 low (i.e. door switch)
Position B: mechanical switch is released
Position C: card reader has finished reset routines and pulls pin 3 low
Position D: VMC has finished reset routines and pulls pin 3 low too.

If a card is inserted first, pin 3 may be pulled low first at position B.
If VMC is waked up via other means, maybe card reader is waked up at position D first.

In any case, this is a good example to clarify different waveform conditions on pin 3. Please note that any device may release pin 3 after a short duration (<1ms) cause pin 3 should work as dynamically wake-up. Holding pin 3 permanently low may prevent other

CSC ServiceWorks – Ex. 1008
Page 268 of 270

devices from wake-up, i.e. after all devices ran into timeout and one is still holding pin 3, the other can no longer enter ready state (Note i.e. to door-switches etc.)

CSC ServiceWorks – Ex. 1008
Page 269 of 270

(this page intentionally left blank)

CSC ServiceWorks – Ex. 1008
Page 270 of 270