US010121318B2

(12) **United States Patent**
**LeMay et al.**

(10) **Patent No.: US 10,121,318 B2**
(45) **Date of Patent: Nov. 6, 2018**

(54) **BILL ACCEPTORS AND PRINTERS FOR PROVIDING VIRTUAL TICKET-IN AND TICKET-OUT ON A GAMING MACHINE**

(75) Inventors: **Steven G. LeMay**, Reno, NV (US); **Dwayne R. Nelson**, Las Vegas, NV (US); **Jim A. Vasquez**, Carson City, NV (US); **Scott T. Gowin**, Reno, NV (US)

(73) Assignee: **IGT**, Las Vegas, NV (US)

( * ) Notice: Subject to any disclaimer, the term of this patent is extended or adjusted under 35 U.S.C. 154(b) by 7 days.

(21) Appl. No.: **13/229,536**

(22) Filed: **Sep. 9, 2011**

(65) **Prior Publication Data**

US 2013/0065686 A1 Mar. 14, 2013

(51) **Int. Cl.**
***A63F 9/24*** (2006.01)
***G07F 17/32*** (2006.01)

(52) **U.S. Cl.**
CPC ..... ***G07F 17/3248*** (2013.01); ***G07F 17/32*** (2013.01); ***G07F 17/3255*** (2013.01)

(58) **Field of Classification Search**
CPC ..... G07F 17/3218; G07F 17/3225; G07F 17/3234; G07F 17/3251; G07F 17/3248
USPC ..... 463/37
See application file for complete search history.

(56) **References Cited**

U.S. PATENT DOCUMENTS

| | | | |
|---|---|---|---|
| D40,661 | S | 4/1910 | Taunton |
| 3,662,105 | A | 5/1972 | Parks |
| 4,071,689 | A | 1/1978 | Talmage |
| 4,072,930 | A | 2/1978 | Lucero |
| 4,283,709 | A | 8/1981 | Lucero |
| 4,339,709 | A | 7/1982 | Brihier |
| 4,339,798 | A | 7/1982 | Hedges |
| 4,553,222 | A | 11/1985 | Kurland |
| 4,856,787 | A | 8/1989 | Itkis |

(Continued)

FOREIGN PATENT DOCUMENTS

| | | | |
|---|---|---|---|
| EP | 1 895 483 | A2 | 3/2008 |
| WO | WO-2007/142980 | A2 | 12/2007 |
| WO | WO-2009/026320 | A1 | 2/2009 |

OTHER PUBLICATIONS

U.S. Office Action for U.S. Appl. No. 13/231,275, dated Sep. 4, 2012, 16 pages.

(Continued)

*Primary Examiner* — Lawrence Galka
(74) *Attorney, Agent, or Firm* — Neal, Gerber & Eisenberg LLP

(57) **ABSTRACT**

A gaming system compatible with patron-controlled portable electronic devices, such as smart phones or tablet computers, is described. The gaming system can include electronic gaming machines that are compatible to receive both virtual ticket vouchers and printed ticket vouchers that are redeemable for credits on the electronic gaming machines. Information associated with a virtual ticket voucher can be stored on a patron-controlled portable electronic device and then can be wireless transmitted to the electronic gaming machines. The electronic gaming machines can be configured to issue virtual ticket vouchers and printed ticket vouchers that can be redeemed for cash or additional game play on another electronic gaming machine. In one embodiment, the electronic gaming machine can be configured to issue a virtual ticket voucher to a patron-controlled portable electronic device.

**34 Claims, 9 Drawing Sheets**

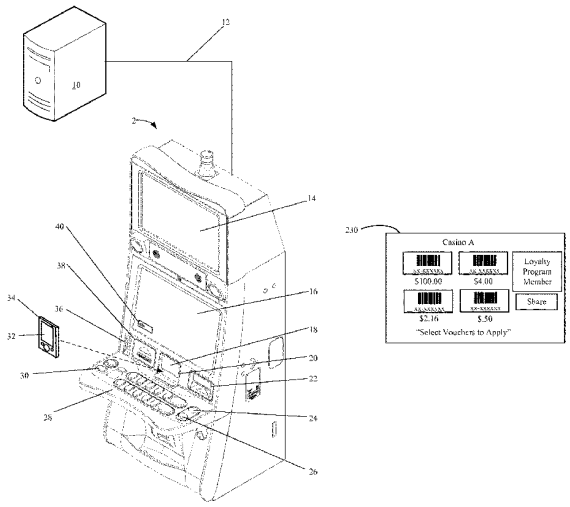

(56) **References Cited**

U.S. PATENT DOCUMENTS

5,038,022 A 8/1991 Lucero
5,042,809 A 8/1991 Richardson
5,048,831 A 9/1991 Sides
5,179,517 A 1/1993 Sarbin
5,221,838 A 6/1993 Gutman
5,371,345 A 12/1994 Lestrange
5,429,361 A 7/1995 Raven
5,457,306 A 10/1995 Lucero
5,470,079 A * 11/1995 LeStrange et al. ..... 463/25
5,483,049 A 1/1996 Schulze, Jr.
5,559,312 A 9/1996 Lucero
5,618,045 A 4/1997 Kagan
5,643,086 A 7/1997 Alcorn
5,655,961 A 8/1997 Acres
5,676,231 A 10/1997 Legras
5,702,304 A 12/1997 Acres
5,718,632 A 2/1998 Hayashi
5,741,183 A 4/1998 Acres
5,759,102 A 6/1998 Pease
5,761,647 A 6/1998 Boushy
5,768,382 A 6/1998 Schneier
5,769,716 A 6/1998 Saffari
5,770,533 A 6/1998 Franchi
5,779,545 A 7/1998 Berg
5,788,573 A 8/1998 Baerlocher
5,795,228 A 8/1998 Trumbull
5,796,389 A 8/1998 Bertram
5,797,085 A 8/1998 Beuk
5,809,482 A 9/1998 Strisower
5,811,772 A 9/1998 Lucero
5,816,918 A 10/1998 Kelly
5,818,019 A 10/1998 Irwin, Jr.
5,833,536 A 11/1998 Davids
5,833,540 A 11/1998 Miodunski
5,836,819 A * 11/1998 Ugawa ..... 463/30
5,851,148 A 12/1998 Brune
5,871,398 A 2/1999 Schneier
5,885,158 A 3/1999 Torango
5,919,091 A 7/1999 Bell
5,951,397 A 9/1999 Dickinson
5,952,640 A 9/1999 Lucero
5,954,583 A 9/1999 Green
5,957,776 A 9/1999 Hoehne
5,959,277 A 9/1999 Lucero
5,967,896 A 10/1999 Jorasch
5,971,271 A 10/1999 Wynn
5,984,779 A 11/1999 Bridgeman
5,999,808 A 12/1999 Ladue
6,001,016 A 12/1999 Walker
6,003,013 A 12/1999 Boushy
6,003,651 A 12/1999 Waller
6,010,404 A 1/2000 Walker
6,012,832 A 1/2000 Saunders
6,012,983 A 1/2000 Walker
6,019,283 A 2/2000 Lucero
6,038,666 A 3/2000 Hsu
6,048,269 A 4/2000 Burns
6,050,895 A 4/2000 Luciano, Jr.
6,062,981 A 5/2000 Luciano
6,068,552 A 5/2000 Walker
6,077,163 A 6/2000 Walker
6,089,975 A 7/2000 Dunn
6,099,408 A 8/2000 Schneier
6,104,815 A 8/2000 Alcorn
6,106,396 A 8/2000 Alcorn
6,110,041 A 8/2000 Walker et al.
6,113,492 A 9/2000 Walker
6,113,493 A 9/2000 Walker
6,113,495 A 9/2000 Walker
6,135,884 A 10/2000 Hedrick
6,135,887 A 10/2000 Pease
6,139,431 A 10/2000 Walker
6,141,711 A 10/2000 Shah
6,142,369 A 11/2000 Jonstromer
6,149,522 A 11/2000 Alcorn
6,161,059 A 12/2000 Tedesco
6,162,121 A 12/2000 Morro
6,162,122 A 12/2000 Acres
6,174,234 B1 1/2001 Seibert, Jr.
6,182,221 B1 1/2001 Hsu
6,183,362 B1 2/2001 Boushy
6,190,256 B1 2/2001 Walker
6,206,283 B1 3/2001 Bansal
6,210,279 B1 4/2001 Dickinson
6,223,166 B1 4/2001 Kay
6,227,972 B1 5/2001 Walker
6,244,958 B1 6/2001 Acres
6,247,643 B1 6/2001 Lucero
6,253,119 B1 6/2001 Dabrowski
6,264,560 B1 7/2001 Goldberg
6,264,561 B1 7/2001 Saffari
6,267,671 B1 7/2001 Hogan
6,270,410 B1 8/2001 Demar
6,280,328 B1 8/2001 Holch
6,285,868 B1 9/2001 Ladue
6,293,866 B1 9/2001 Walker
6,302,790 B1 10/2001 Brossard
6,307,956 B1 10/2001 Black
6,319,125 B1 11/2001 Acres
6,341,353 B1 1/2002 Herman
6,368,216 B1 4/2002 Hedrick
6,371,852 B1 4/2002 Acres
6,378,073 B1 4/2002 Davis
6,379,246 B1 4/2002 Dabrowski
6,383,076 B1 5/2002 Tiedeken
6,409,595 B1 6/2002 Uihlein
6,409,602 B1 6/2002 Wiltshire
6,443,843 B1 9/2002 Walker
6,450,885 B2 9/2002 Schneier
6,488,585 B1 12/2002 Wells
6,496,928 B1 12/2002 Deo
6,530,835 B1 3/2003 Walker
6,561,903 B2 5/2003 Walker
6,581,161 B1 6/2003 Byford
6,582,310 B1 6/2003 Walker
6,585,598 B2 7/2003 Nguyen
6,628,939 B2 9/2003 Paulsen
6,634,550 B1 10/2003 Walker et al.
6,648,761 B1 11/2003 Izawa et al.
6,676,522 B2 1/2004 Rowe et al.
6,682,421 B1 1/2004 Rowe
6,685,567 B2 2/2004 Cockerille
6,702,670 B2 3/2004 Jasper
6,739,975 B2 5/2004 Nguyen
6,758,393 B1 7/2004 Luciano
6,800,029 B2 10/2004 Rowe
6,846,238 B2 1/2005 Wells
6,869,362 B2 3/2005 Walker
6,880,079 B2 4/2005 Kefford
6,896,618 B2 5/2005 Benoy
6,905,411 B2 * 6/2005 Nguyen ..... G07C 9/00031 463/25
6,969,319 B2 11/2005 Rowe et al.
7,004,388 B2 2/2006 Kohta
7,004,837 B1 * 2/2006 Crowder et al. ..... 463/25
7,153,210 B2 12/2006 Yamagishi
7,167,724 B2 1/2007 Yamagishi
7,275,991 B2 10/2007 Burns
7,331,520 B2 2/2008 Silva
7,335,106 B2 2/2008 Johnson
7,337,330 B2 2/2008 Gatto
7,341,522 B2 3/2008 Yamagishi
7,416,485 B2 8/2008 Walker et al.
7,419,428 B2 9/2008 Rowe
7,467,999 B2 12/2008 Walker et al.
7,477,889 B2 1/2009 Kim
7,510,474 B2 3/2009 Carter, Sr.
7,545,522 B1 6/2009 Lou
7,552,341 B2 6/2009 Chen
7,594,855 B2 9/2009 Meyerhofer
7,611,409 B2 11/2009 Muir et al.
7,644,861 B2 1/2010 Alderucci
7,693,306 B2 4/2010 Huber
7,699,703 B2 4/2010 Muir

(56) **References Cited**

U.S. PATENT DOCUMENTS

7,753,789 B2 7/2010 Walker et al.
7,758,420 B2 7/2010 Saffari
7,771,271 B2 8/2010 Walker et al.
7,785,193 B2 8/2010 Paulsen
7,846,017 B2 12/2010 Walker et al.
7,850,522 B2 12/2010 Walker et al.
7,883,417 B2 2/2011 Bruzzese
7,950,996 B2 5/2011 Nguyen
7,988,550 B2 8/2011 White
7,997,972 B2 8/2011 Nguyen et al.
8,016,666 B2 * 9/2011 Angell et al. ..... 463/25
8,023,133 B2 9/2011 Kaneko
8,038,527 B2 10/2011 Walker et al.
8,057,303 B2 11/2011 Rasmussen
8,079,904 B2 12/2011 Griswold
8,096,872 B2 1/2012 Walker et al.
8,118,668 B2 2/2012 Gagner et al.
8,144,356 B2 3/2012 Meyerhofer
8,157,642 B2 4/2012 Paulsen
8,192,276 B2 6/2012 Walker et al.
8,219,129 B2 7/2012 Brown
8,220,019 B2 7/2012 Stearns et al.
8,282,465 B2 10/2012 Giobbi
8,282,490 B2 10/2012 Arezina
8,286,856 B2 10/2012 Meyerhofer
8,290,876 B1 * 10/2012 Powell ..... G06Q 20/10 705/64
8,393,955 B2 3/2013 Arezina et al.
8,419,548 B2 4/2013 Gagner et al.
8,469,800 B2 6/2013 LeMay et al.
8,512,144 B2 8/2013 Johnson et al.
8,550,903 B2 10/2013 Lyons
8,556,707 B2 * 10/2013 Potts ..... A63F 3/00157 463/25
8,597,108 B2 12/2013 Nguyen
8,597,111 B2 12/2013 LeMay et al.
8,602,875 B2 12/2013 Nguyen
8,608,560 B1 * 12/2013 Perrone ..... G07F 17/3211 463/31
8,608,569 B2 12/2013 Carrico
8,613,659 B2 12/2013 Nelson
8,613,668 B2 12/2013 Nelson et al.
8,622,836 B2 1/2014 Nelson et al.
8,721,434 B2 5/2014 Nelson et al.
8,734,236 B2 5/2014 Arezina et al.
8,827,813 B2 9/2014 LeMay et al.
8,827,814 B2 9/2014 LeMay et al.
8,876,595 B2 11/2014 Nelson et al.
8,932,140 B2 1/2015 Gagner et al.
8,956,222 B2 2/2015 LeMay et al.
9,011,236 B2 4/2015 Nelson et al.
2001/0039204 A1 11/2001 Tanskanen
2001/0044337 A1 11/2001 Rowe
2002/0020603 A1 2/2002 Jones
2002/0061778 A1 5/2002 Acres
2002/0077182 A1 6/2002 Swanberg
2002/0082070 A1 6/2002 Macke et al.
2002/0087641 A1 7/2002 Levosky
2002/0090986 A1 7/2002 Cote
2002/0094869 A1 7/2002 Harkham
2002/0107066 A1 8/2002 Seelig
2002/0111206 A1 * 8/2002 Van Baltz et al. ..... 463/17
2002/0111209 A1 8/2002 Walker
2002/0145035 A1 10/2002 Jones
2002/0147047 A1 10/2002 Letovsky
2002/0147049 A1 10/2002 Carter, Sr.
2002/0163570 A1 11/2002 Phillips
2002/0169623 A1 11/2002 Call et al.
2002/0183046 A1 * 12/2002 Joyce et al. ..... 455/414
2002/0196342 A1 12/2002 Walker
2003/0003988 A1 1/2003 Walker
2003/0008707 A1 * 1/2003 Walker ..... G06Q 30/02 463/25
2003/0027632 A1 2/2003 Sines
2003/0032485 A1 2/2003 Cockerille
2003/0045354 A1 3/2003 Giobbi
2003/0054868 A1 * 3/2003 Paulsen et al. ..... 463/1
2003/0054881 A1 3/2003 Hedrick
2003/0064805 A1 4/2003 Wells
2003/0074259 A1 4/2003 Slyman et al.
2003/0083126 A1 5/2003 Paulsen
2003/0083943 A1 5/2003 Adams
2003/0092477 A1 * 5/2003 Luciano et al. ..... 463/16
2003/0104865 A1 6/2003 Itkis
2003/0141359 A1 7/2003 Dymovsky
2003/0144052 A1 7/2003 Walker
2003/0148812 A1 8/2003 Paulsen
2003/0162591 A1 8/2003 Nguyen et al.
2003/0172037 A1 9/2003 Jung
2003/0186739 A1 10/2003 Paulsen et al.
2003/0199321 A1 10/2003 Williams
2003/0203756 A1 10/2003 Jackson
2003/0224852 A1 12/2003 Walker
2003/0228900 A1 12/2003 Yamagishi
2003/0233276 A1 * 12/2003 Pearlman ..... G06Q 20/3274 705/14.23
2004/0014514 A1 1/2004 Yacenda
2004/0016797 A1 1/2004 Jones
2004/0023721 A1 2/2004 Giobbi
2004/0039635 A1 2/2004 Linde
2004/0043814 A1 3/2004 Angell
2004/0085293 A1 5/2004 Soper
2004/0106454 A1 6/2004 Walker
2004/0127277 A1 7/2004 Walker
2004/0129773 A1 7/2004 Lute, Jr.
2004/0147314 A1 7/2004 Lemay
2004/0185935 A1 9/2004 Yamagishi
2004/0190042 A1 9/2004 Ferlitsch
2004/0192434 A1 9/2004 Walker
2004/0199284 A1 10/2004 Hara
2004/0209690 A1 10/2004 Bruzzese
2004/0225565 A1 11/2004 Selman
2004/0259640 A1 12/2004 Gentles
2004/0266395 A1 12/2004 Pailles
2005/0014554 A1 1/2005 Walker
2005/0020354 A1 1/2005 Nguyen
2005/0049049 A1 3/2005 Griswold et al.
2005/0054438 A1 3/2005 Rothschild
2005/0059485 A1 3/2005 Paulsen
2005/0070257 A1 3/2005 Saarinen
2005/0076242 A1 4/2005 Breuer
2005/0101383 A1 5/2005 Wells
2005/0130728 A1 6/2005 Nguyen
2005/0227770 A1 10/2005 Papulov
2005/0240484 A1 10/2005 Yan
2005/0255911 A1 * 11/2005 Nguyen et al. ..... 463/25
2005/0287852 A1 12/2005 Sugawara
2006/0018450 A1 1/2006 Sandberg-Diment
2006/0025206 A1 2/2006 Walker
2006/0025222 A1 2/2006 Sekine
2006/0035707 A1 2/2006 Nguyen
2006/0040741 A1 2/2006 Griswold
2006/0046823 A1 3/2006 Kaminkow
2006/0046834 A1 3/2006 Sekine
2006/0046842 A1 3/2006 Mattice
2006/0046855 A1 * 3/2006 Nguyen et al. ..... 463/43
2006/0049624 A1 3/2006 Brosnan et al.
2006/0079333 A1 4/2006 Morrow
2006/0089174 A1 * 4/2006 Twerdahl ..... 455/567
2006/0160621 A1 * 7/2006 Rowe et al. ..... 463/42
2006/0165060 A1 7/2006 Dua
2006/0166732 A1 7/2006 Lechner
2006/0166741 A1 * 7/2006 Boyd et al. ..... 463/42
2006/0173781 A1 8/2006 Donner
2006/0189382 A1 8/2006 Muir
2006/0223627 A1 10/2006 Nozaki
2006/0226598 A1 10/2006 Walker
2006/0246981 A1 11/2006 Walker
2006/0247037 A1 11/2006 Park
2006/0258439 A1 * 11/2006 White ..... G07F 17/3248 463/25
2006/0266598 A1 11/2006 Baumgartner et al.
2006/0271433 A1 11/2006 Hughes
2006/0279781 A1 12/2006 Kaneko

(56) **References Cited**

U.S. PATENT DOCUMENTS

2006/0281554 A1* 12/2006 Gatto et al. ..... 463/42
2006/0287072 A1 12/2006 Walker
2006/0287098 A1 12/2006 Morrow et al.
2007/0017979 A1 1/2007 Wu et al.
2007/0021198 A1 1/2007 Muir
2007/0060302 A1 3/2007 Fabbri
2007/0060372 A1 3/2007 Yamagishi
2007/0117608 A1 5/2007 Roper et al.
2007/0117623 A1 5/2007 Nelson
2007/0129150 A1 6/2007 Crowder
2007/0129151 A1 6/2007 Crowder
2007/0155469 A1 7/2007 Johnson
2007/0159301 A1 7/2007 Hirt
2007/0174809 A1 7/2007 Brown
2007/0190494 A1 8/2007 Rosenberg
2007/0202941 A1 8/2007 Miltenberger et al.
2007/0218971 A1 9/2007 Berube
2007/0218985 A1 9/2007 Okada
2007/0218991 A1 9/2007 Okada
2007/0238505 A1 10/2007 Okada
2008/0026816 A1 1/2008 Sammon
2008/0026823 A1 1/2008 Wolf
2008/0026844 A1 1/2008 Wells
2008/0070671 A1 3/2008 Okada
2008/0076528 A1 3/2008 Nguyen
2008/0076572 A1 3/2008 Nguyen et al.
2008/0085753 A1 4/2008 Okada
2008/0123026 A1 5/2008 Kwag
2008/0139306 A1 6/2008 Lutnick
2008/0166997 A1* 7/2008 Sun et al. ..... 455/406
2008/0182644 A1 7/2008 Lutnick
2008/0200251 A1 8/2008 Alderucci
2008/0207296 A1 8/2008 Lutnick
2008/0213026 A1 9/2008 Grabiec et al.
2008/0234028 A1 9/2008 Meyer
2008/0261682 A1 10/2008 Phillips
2008/0268934 A1* 10/2008 Mattice et al. ..... 463/16
2008/0270302 A1 10/2008 Beenau et al.
2008/0293483 A1 11/2008 Pickus
2008/0300061 A1 12/2008 Zheng
2008/0305860 A1 12/2008 Linner
2008/0305862 A1 12/2008 Walker
2008/0305873 A1 12/2008 Zheng
2008/0311971 A1 12/2008 Dean
2008/0318655 A1 12/2008 Davies
2009/0011821 A1 1/2009 Griswold
2009/0023490 A1 1/2009 Moshal
2009/0054149 A1* 2/2009 Brosnan et al. ..... 463/42
2009/0098943 A1 4/2009 Weber et al.
2009/0124350 A1 5/2009 Iddings
2009/0125429 A1 5/2009 Takayama
2009/0131134 A1 5/2009 Baerlocher
2009/0186680 A1 7/2009 Napolitano
2009/0197684 A1 8/2009 Arezina
2009/0227317 A1 9/2009 Spangler
2009/0233715 A1 9/2009 Ergen
2009/0275397 A1* 11/2009 Van Baltz et al. ..... 463/25
2010/0012715 A1 1/2010 Williams
2010/0016075 A1 1/2010 Thomas
2010/0048297 A1 2/2010 Dasgupta
2010/0062840 A1 3/2010 Herrmann
2010/0069160 A1 3/2010 Barrett
2010/0087241 A1 4/2010 Nguyen
2010/0087249 A1* 4/2010 Rowe ..... 463/31
2010/0093421 A1 4/2010 Nyman
2010/0093429 A1 4/2010 Mattice
2010/0113061 A1 5/2010 Holcman
2010/0113161 A1 5/2010 Walker
2010/0173691 A1 7/2010 Wolfe
2010/0174650 A1 7/2010 Nonaka
2010/0178986 A1 7/2010 Davis et al.
2010/0219234 A1 9/2010 Forbes
2010/0227670 A1 9/2010 Arezina et al.
2010/0234099 A1 9/2010 Rasmsen
2010/0250787 A1 9/2010 Miyata
2010/0304848 A1 12/2010 Detlefsen
2010/0323785 A1 12/2010 Motyl
2010/0323789 A1 12/2010 Gabriele
2010/0331079 A1 12/2010 Bytnar et al.
2011/0015976 A1 1/2011 Lempel et al.
2011/0028199 A1 2/2011 Luciano et al.
2011/0065496 A1 3/2011 Gagner
2011/0065497 A1 3/2011 Patterson, Jr.
2011/0076963 A1* 3/2011 Hatano ..... 455/68
2011/0086691 A1 4/2011 Luciano et al.
2011/0086696 A1 4/2011 MacEwan
2011/0098104 A1 4/2011 Meyerhofer
2011/0118008 A1 5/2011 Taylor
2011/0119098 A1 5/2011 Miller
2011/0136576 A1* 6/2011 Kammler et al. ..... 463/42
2011/0207531 A1 8/2011 Gagner
2011/0208418 A1 8/2011 Looney et al.
2011/0242565 A1 10/2011 Armstrong
2011/0287823 A1 11/2011 Guinn et al.
2011/0295668 A1 12/2011 Charania
2011/0306400 A1 12/2011 Nguyen
2011/0306401 A1 12/2011 Nguyen
2011/0314153 A1 12/2011 Bathiche
2012/0015735 A1 1/2012 Abouchar
2012/0046110 A1 2/2012 Amaitis
2012/0066048 A1 3/2012 Foust et al.
2012/0084131 A1 4/2012 Bergel et al.
2012/0122584 A1 5/2012 Nguyen
2012/0122585 A1 5/2012 Nguyen
2012/0129611 A1 5/2012 Rasmussen
2012/0149561 A1 6/2012 Ribi et al.
2012/0187187 A1* 7/2012 Duff ..... G06Q 20/3276 235/382
2012/0221474 A1* 8/2012 Eicher et al. ..... 705/51
2012/0252556 A1* 10/2012 Doyle et al. ..... 463/25
2012/0290336 A1 11/2012 Rosenblatt
2013/0013383 A1* 1/2013 Vitti ..... G06Q 30/0207 705/14.16
2013/0013389 A1 1/2013 Vitti et al.
2013/0017884 A1 1/2013 Price
2013/0023339 A1 1/2013 Davis
2013/0053133 A1* 2/2013 Schueller ..... 463/25
2013/0053136 A1 2/2013 Lemay et al.
2013/0053148 A1 2/2013 Nelson et al.
2013/0065668 A1 3/2013 LeMay et al.
2013/0065678 A1 3/2013 Nelson et al.
2013/0065686 A1 3/2013 LeMay et al.
2013/0130777 A1 5/2013 LeMay et al.
2013/0130778 A1* 5/2013 Anderson et al. ..... 463/25
2013/0130779 A1* 5/2013 Gagner ..... G07F 17/3267 463/25
2013/0137509 A1 5/2013 Weber et al.
2013/0137510 A1 5/2013 Weber et al.
2013/0137516 A1 5/2013 Griswold et al.
2013/0252713 A1 9/2013 Nelson et al.
2013/0273889 A1* 10/2013 Lobmaier ..... H04W 12/08 455/411
2013/0324237 A1 12/2013 Adiraju et al.
2014/0045586 A1 2/2014 Allen et al.
2014/0221099 A1 8/2014 Johnson et al.

OTHER PUBLICATIONS

U.S. Appl. No. 13/156,903, filed Jun. 9, 2011.
U.S. Appl. No. 13/157,166, filed Jun. 9, 2011.
U.S. Appl. No. 13/217,105, filed Aug. 24, 2011.
U.S. Appl. No. 13/217,110, filed Aug. 24, 2011.
U.S. Appl. No. 13/220,430, filed Aug. 29, 2011.
U.S. Appl. No. 13/333,659, filed Dec. 21, 2011.
U.S. Appl. No. 13/333,669, filed Dec. 21, 2011.
U.S. Appl. No. 13/333,679, filed Dec. 21, 2011.
U.S. Appl. No. 13/299,199, filed Nov. 17, 2011.
U.S. Appl. No. 13/333,623, filed Dec. 21, 2011.
U.S. Appl. No. 13/229,494, filed Sep. 9, 2011.
U.S. Appl. No. 13/229,507, filed Sep. 9, 2011.
U.S. Appl. No. 13/231,275, filed Sep. 13, 2011.
U.S. Appl. No. 13/308,213, filed Nov. 30, 2011.

(56) **References Cited**

OTHER PUBLICATIONS

U.S. Appl. No. 13/308,160, filed Nov. 30, 2011.
U.S. Appl. No. 13/335,652, filed Dec. 22, 2011.
U.S. Appl. No. 13/306,911, filed Nov. 29, 2011.
U.S. Appl. No. 13/361,601, filed Jan. 30, 2012.
U.S. Appl. No. 13/335,613, filed Dec. 22, 2011.
U.S. Appl. No. 13/426,479, filed Mar. 21, 2011.

* cited by examiner

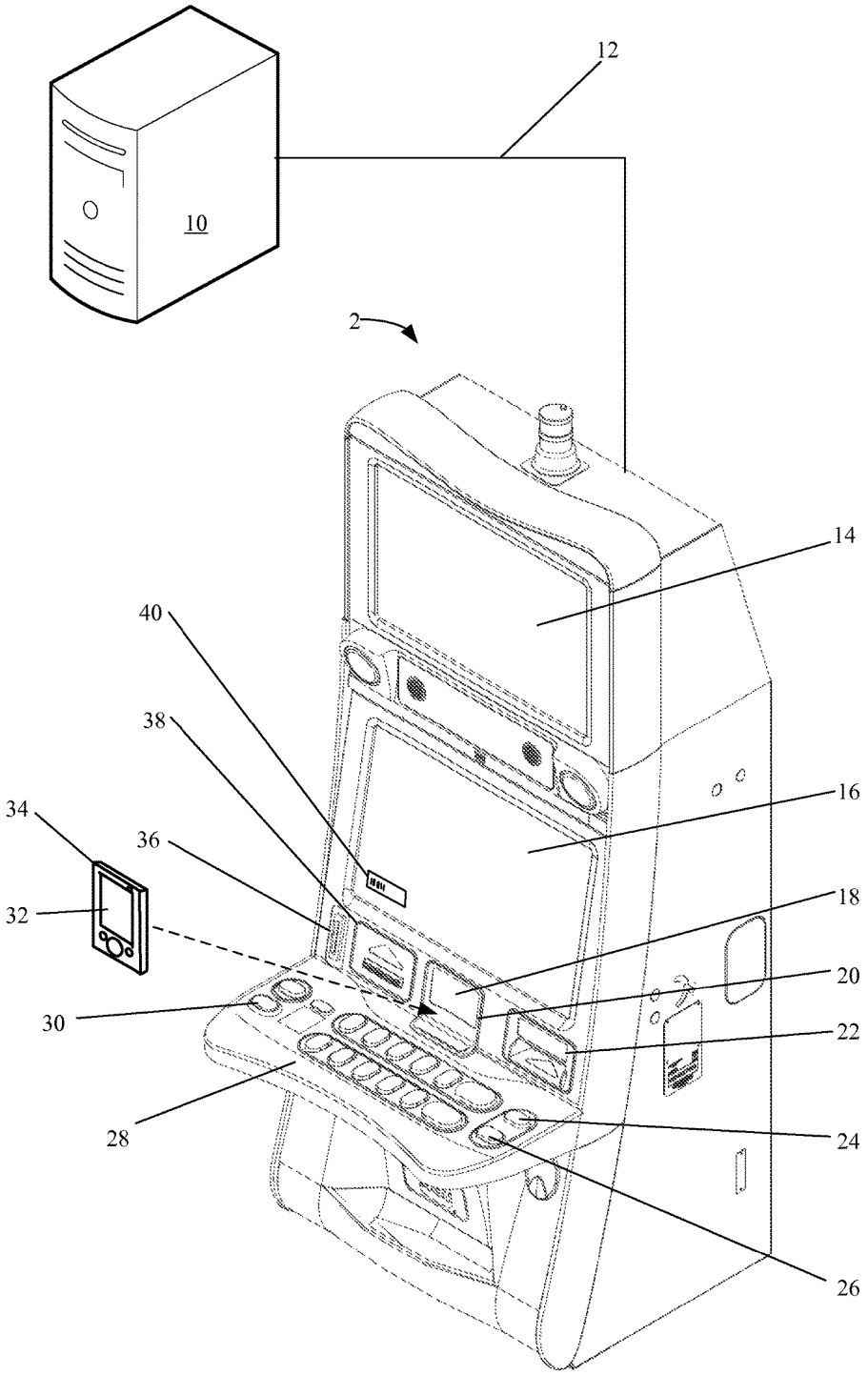


*Fig. 1*

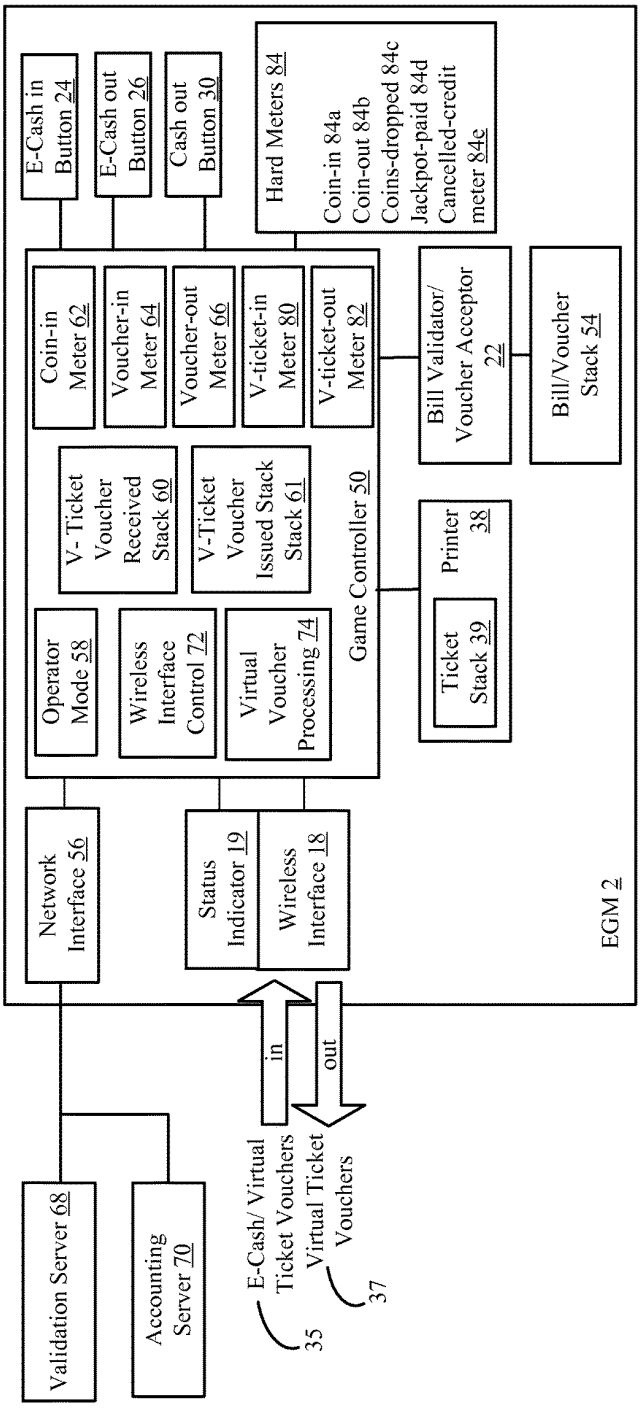
E-Cash in Button 24
E-Cash out Button 26
Cash out Button 30
Hard Meters 84
Coin-in 84a
Coin-out 84b
Coins-dropped 84c
Jackpot-paid 84d
Cancelled-credit meter 84e
Coin-in Meter 62
Voucher-in Meter 64
Voucher-out Meter 66
V-ticket-in Meter 80
V-ticket-out Meter 82
Bill Validator/ Voucher Acceptor 22
Bill/Voucher Stack 54
V-Ticket Voucher Received Stack 60
V-Ticket Voucher Issued Stack Stack 61
Game Controller 50
Printer 38
Ticket Stack 39
Operator Mode 58
Wireless Interface Control 72
Virtual Voucher Processing 74
Network Interface 56
Status Indicator 19
Wireless Interface 18
EGM 2
in
out
Validation Server 68
Accounting Server 70
E-Cash/ Virtual Ticket Vouchers
Virtual Ticket Vouchers
35
37

*Fig. 2*

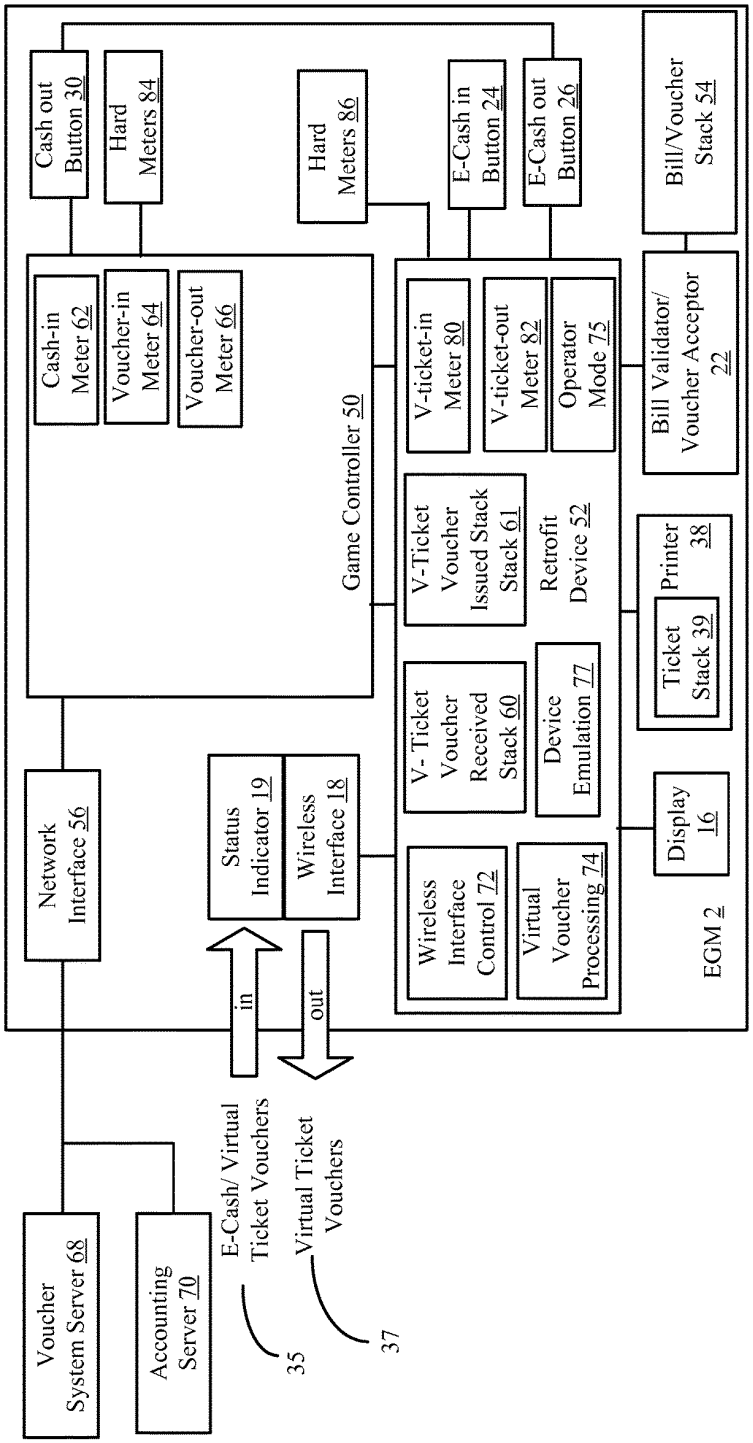
Cash out Button 30
Hard Meters 84
Hard Meters 86
E-Cash in Button 24
E-Cash out Button 26
Bill/Voucher Stack 54
Cash-in Meter 62
Voucher-in Meter 64
Voucher-out Meter 66
Game Controller 50
V-ticket-in Meter 80
V-ticket-out Meter 82
Operator Mode 75
Bill Validator/ Voucher Acceptor 22
V-Ticket Voucher Issued Stack Stack 61
Retrofit Device 52
Printer 38
Ticket Stack 39
V- Ticket Voucher Received Stack 60
Device Emulation 77
Network Interface 56
Status Indicator 19
Wireless Interface 18
Display 16
Wireless Interface Control 72
Virtual Voucher Processing 74
EGM 2
in
out
E-Cash/ Virtual Ticket Vouchers
Virtual Ticket Vouchers
Voucher System Server 68
Accounting Server 70
35
37

*Fig. 3A*

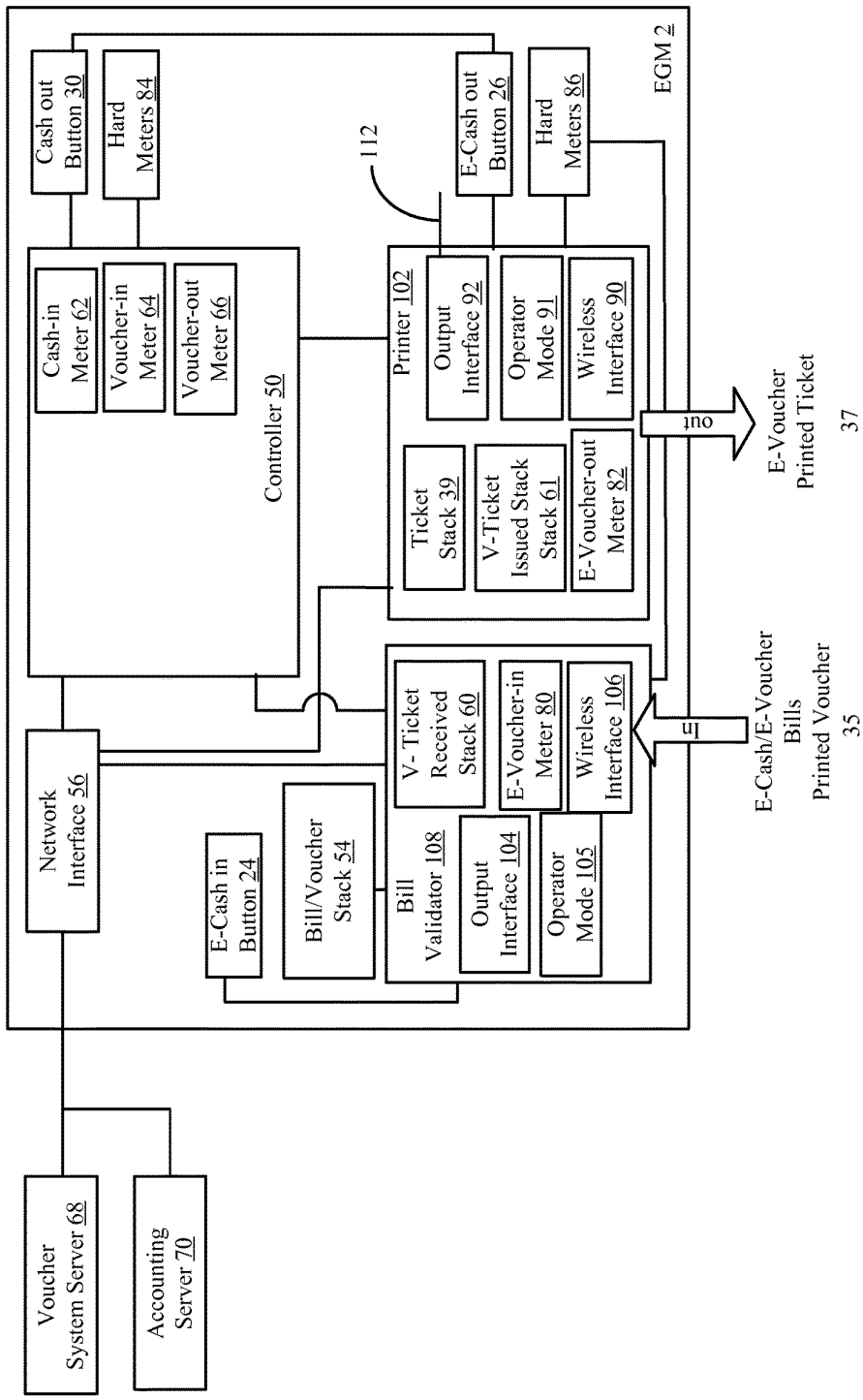
Cash out Button 30
Hard Meters 84
112
E-Cash out Button 26
Hard Meters 86
EGM 2
Cash-in Meter 62
Voucher-in Meter 64
Voucher-out Meter 66
Controller 50
Printer 102
Output Interface 92
Operator Mode 91
Wireless Interface 90
out
E-Voucher Printed Ticket
37
Ticket Stack 39
V-Ticket Issued Stack Stack 61
E-Voucher-out Meter 82
Network Interface 56
V- Ticket Received Stack 60
E-Voucher-in Meter 80
Wireless Interface 106
in
E-Cash/E-Voucher Bills Printed Voucher
35
E-Cash in Button 24
Bill/Voucher Stack 54
Bill Validator 108
Output Interface 104
Operator Mode 105
Voucher System Server 68
Accounting Server 70

*Fig. 3B*

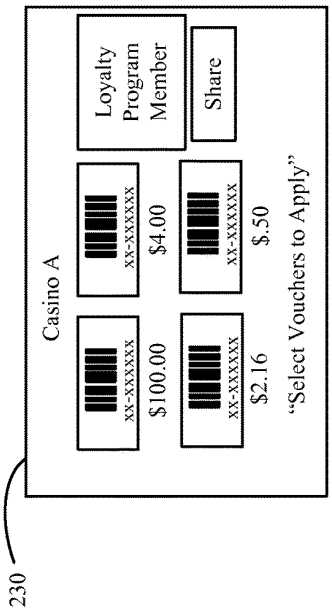


Fig. 4B

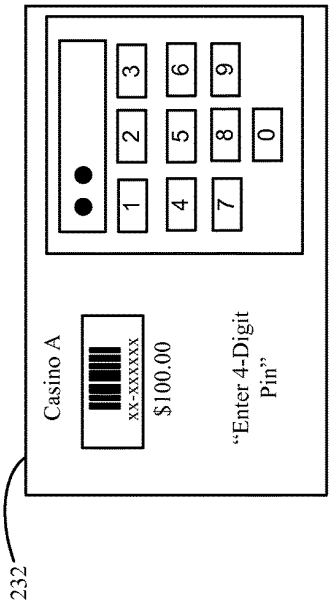


Fig. 4C

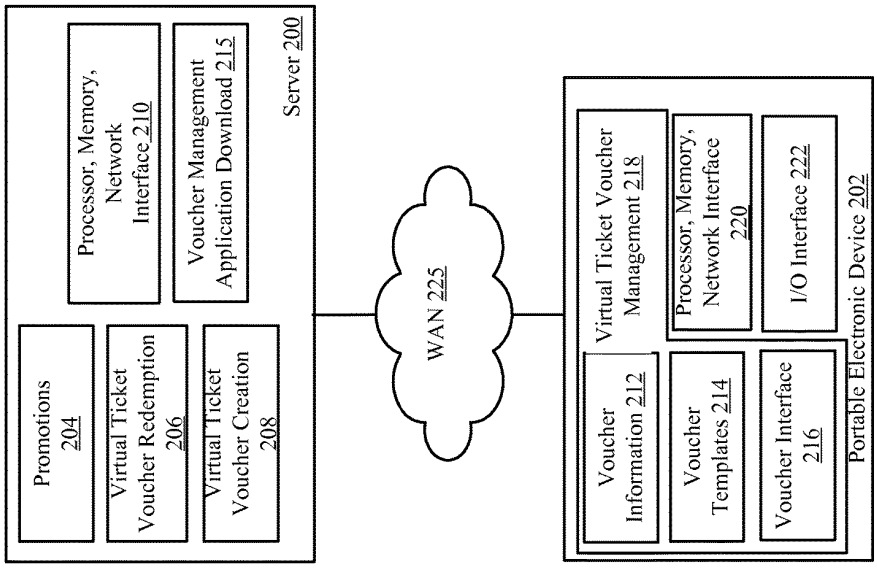


Fig. 4A

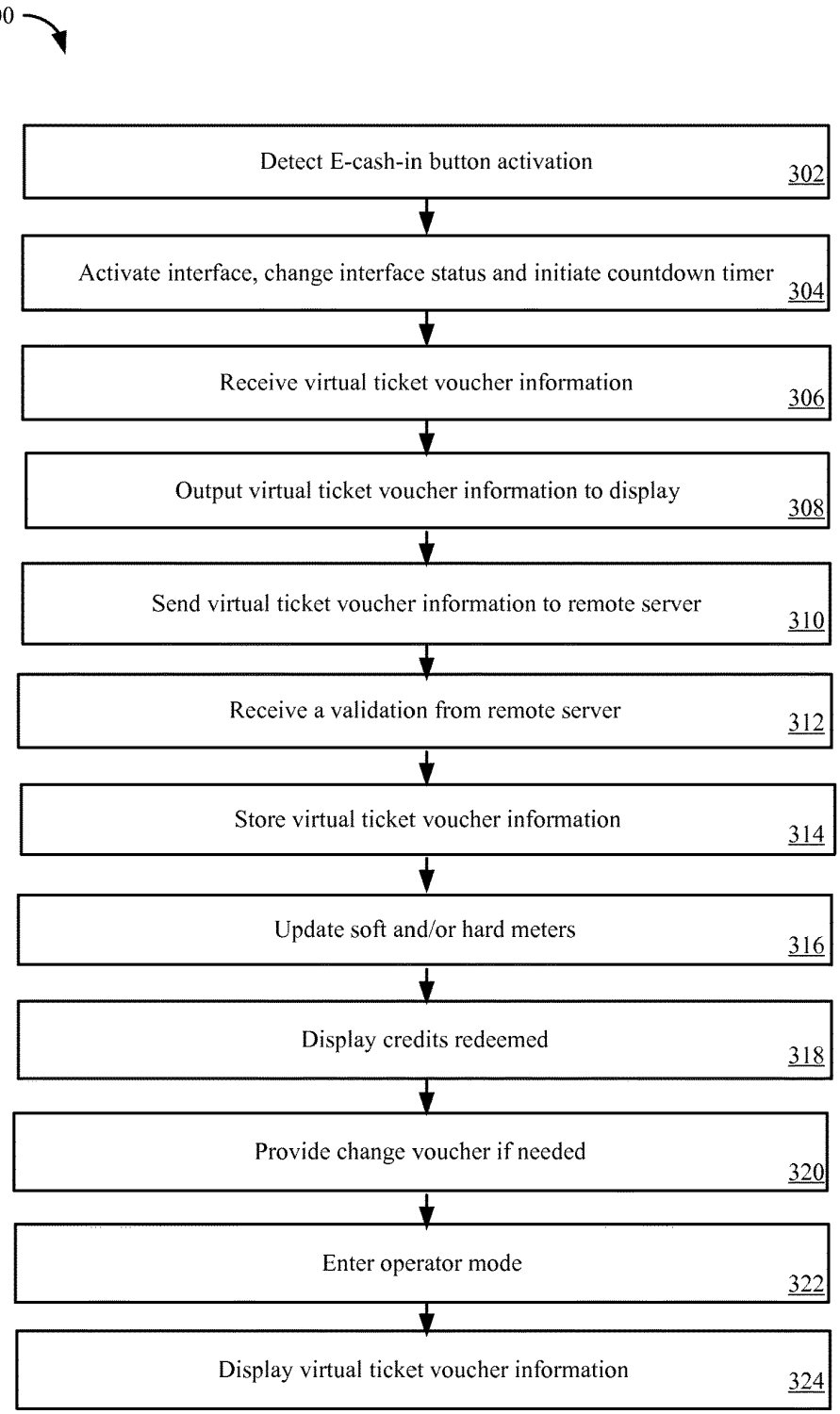
300
Detect E-cash-in button activation
302
Activate interface, change interface status and initiate countdown timer
304
Receive virtual ticket voucher information
306
Output virtual ticket voucher information to display
308
Send virtual ticket voucher information to remote server
310
Receive a validation from remote server
312
Store virtual ticket voucher information
314
Update soft and/or hard meters
316
Display credits redeemed
318
Provide change voucher if needed
320
Enter operator mode
322
Display virtual ticket voucher information
324

*Fig. 5A*

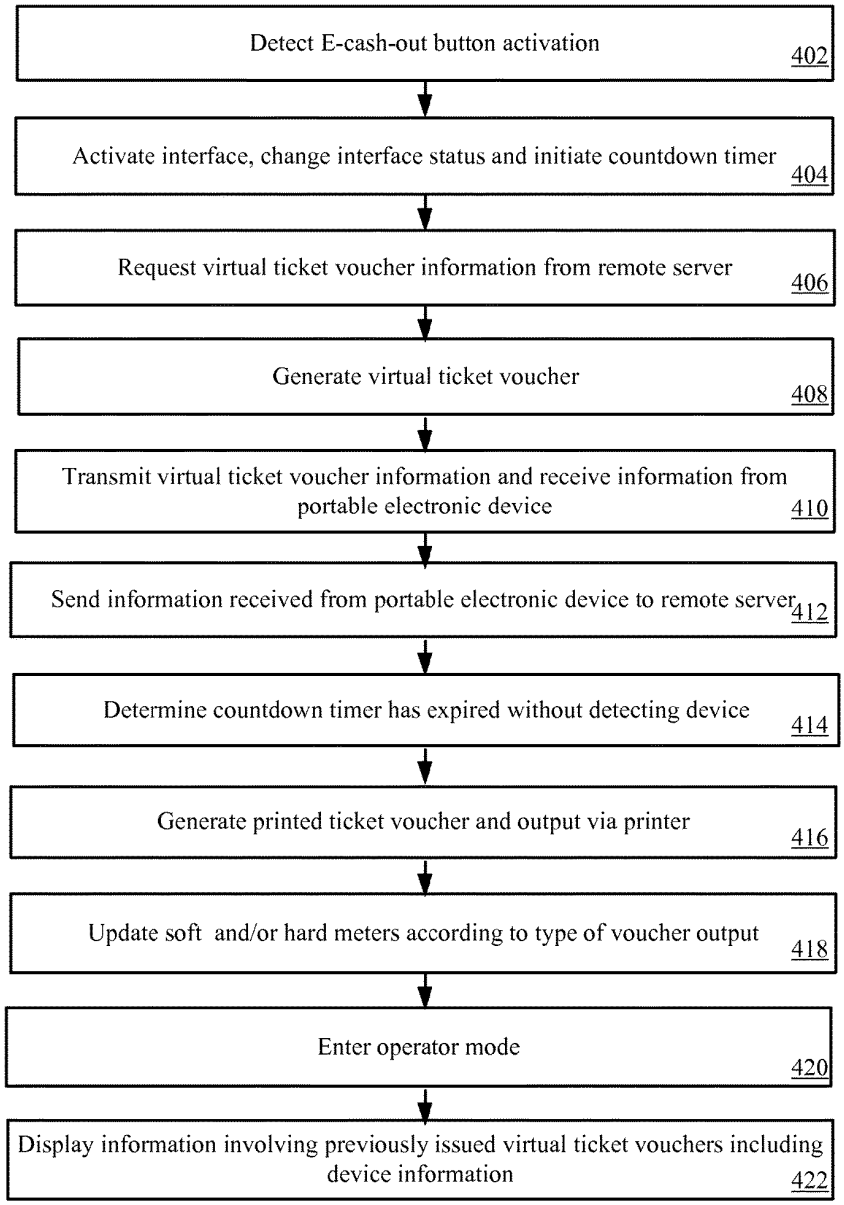
400
Detect E-cash-out button activation
402
Activate interface, change interface status and initiate countdown timer
404
Request virtual ticket voucher information from remote server
406
Generate virtual ticket voucher
408
Transmit virtual ticket voucher information and receive information from portable electronic device
410
Send information received from portable electronic device to remote server
412
Determine countdown timer has expired without detecting device
414
Generate printed ticket voucher and output via printer
416
Update soft and/or hard meters according to type of voucher output
418
Enter operator mode
420
Display information involving previously issued virtual ticket vouchers including device information
422

*Fig. 5B*

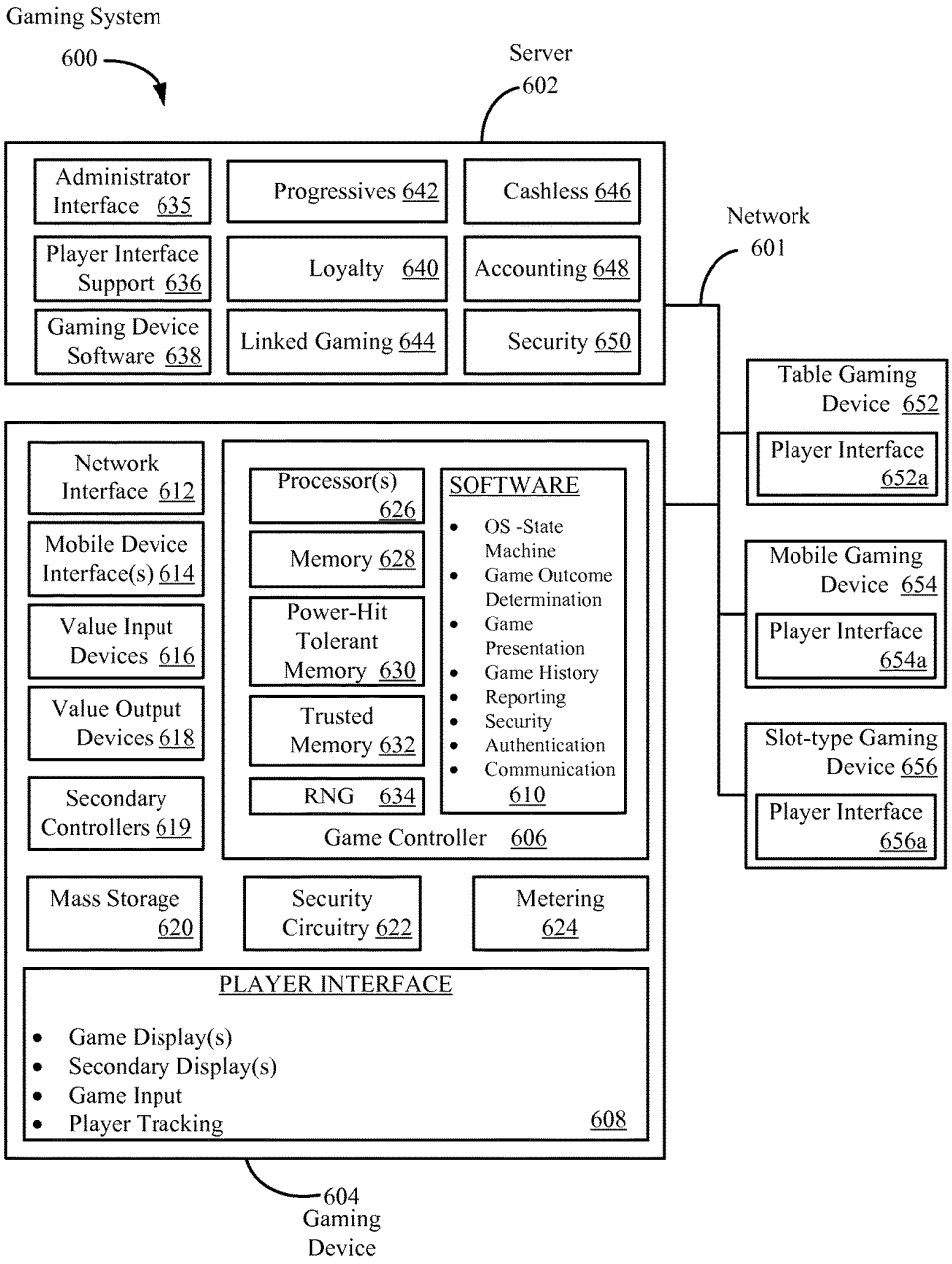
Gaming System
600
Server
602
Administrator Interface 635
Progressives 642
Cashless 646
Player Interface Support 636
Loyalty 640
Accounting 648
Gaming Device Software 638
Linked Gaming 644
Security 650
Network
601
Table Gaming Device 652
Player Interface 652a
Mobile Gaming Device 654
Player Interface 654a
Slot-type Gaming Device 656
Player Interface 656a
Network Interface 612
Mobile Device Interface(s) 614
Value Input Devices 616
Value Output Devices 618
Secondary Controllers 619
Processor(s) 626
Memory 628
Power-Hit Tolerant Memory 630
Trusted Memory 632
RNG 634
SOFTWARE
OS -State Machine
Game Outcome Determination
Game Presentation
Game History
Reporting
Security
Authentication
Communication
610
Game Controller 606
Mass Storage 620
Security Circuitry 622
Metering 624
PLAYER INTERFACE
Game Display(s)
Secondary Display(s)
Game Input
Player Tracking
608
604
Gaming Device

*Fig. 6*

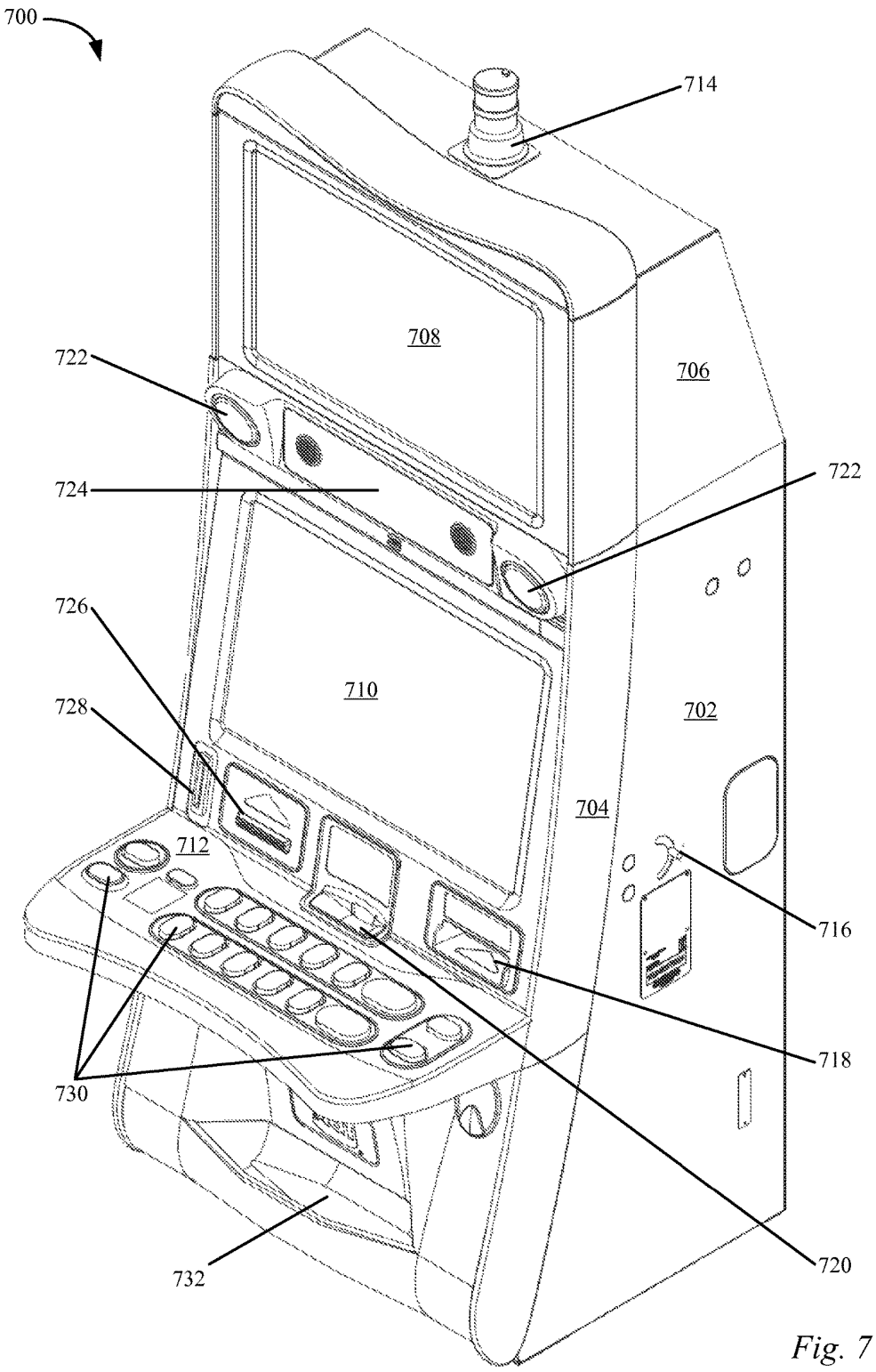
700
714
708
706
722
724
722
726
710
702
728
704
712
716
718
730
720
732

*Fig. 7*

# BILL ACCEPTORS AND PRINTERS FOR PROVIDING VIRTUAL TICKET-IN AND TICKET-OUT ON A GAMING MACHINE

## BACKGROUND

Field of the Described Embodiments

The described embodiments relate generally to gaming systems, such as gaming systems deployed in a casino enterprise. More particularly, apparatus and method for moving value on and off of an electronic gaming machine are described.

Description of the Related Art

An electronic gaming machine (EGM) that is configured to provide a wager-based game can be likened to a combination of an automatic teller machine and a home gaming console. The automatic teller machine aspect relates to the cash handling capabilities of the EGM which allow it to securely receive, store and dispense cash or an indicia of credit redeemable for cash. The home gaming console aspect relates to the game generation capabilities of the EGM, which allow it to generate and display games that are entertaining to a user of the EGM.

To provide cash handling capabilities, a common configuration for an EGM, such as a video slot machine or mechanical slot machine, is to include a bill validator and a ticket printer. The bill validator is configured to accept and validate cash currency and ticket vouchers where the ticket vouchers are bearer instruments redeemable for cash or game play on an EGM. Accepted cash or ticket vouchers can be converted to credits that are used to make wagers on the EGM. The accepted tickets are stored within a cash box secured within a locked EGM cabinet. When a player wishes to leave and has credits remaining on the EGM, the credits are converted to a cash value and are output as a ticket voucher via the printer where the cash value is typically printed on the ticket. The printed ticket voucher can be used to add credits to another EGM or the printed ticket voucher can be redeemed for its cash value.

Significant labor costs result from using a bill validator and a ticket printer on an EGM. The labor costs involve periodically removing a cash box including received tickets and cash from the EGM and replacing it with an empty one, counting the cash and tickets removed from the EGM and refilling the ticket stacks on the EGM. Other cash handling configurations also involve similar labor costs. For instance, EGMs can include coin acceptors and coin dispensers. The use of these devices requires periodically removing coins or adding coins to the EGM. Then, the coins retrieved from each EGM are counted on an EGM by EGM basis.

For security purposes, a technician and one or more security providers are typically involved in operations where cash is removed from an EGM. The security providers make sure the cash is retrieved and transported without theft. Further, since removing cash requires the EGM cabinet to be opened, the security providers observe the operation to make sure that tampering doesn't occur with the EGM hardware. An individual might wish to tamper with an EGM to get it to award jackpots, receive cash or dispense cash in an unintended manner. The removed cash is transported to a secure area where additional individuals are involved in counting and recording the various sums of cash and/or ticket vouchers removed from each EGM. The cash amounts removed from each EGM are reconciled with other information sources, such as from hard meters on the EGM or records from a server that generates and validates ticket vouchers. The reconciliation process is important for ensuring the earnings from the EGM are properly taxed.



Gaming enterprises operating electronic gaming machines are always looking for ways of reducing labor costs. In view of the above, new methods of cash handling are desired that reduce the labor costs associated with operating EGMs.

## SUMMARY OF THE DESCRIBED EMBODIMENTS

A gaming system compatible with patron-controlled portable electronic devices, such as smart phones and tablet computers, is described. The gaming system can include gaming devices, such as electronic gaming machines and system servers. The portable electronic devices can be configured to store and transmit virtual ticket voucher information to an EGM or a redemption kiosk and receive a virtual ticket voucher issued from the EGM. The EGM can include one or more wireless interfaces and can be configured to communicate using one more different wireless communication protocols. The wireless interface communication interfaces and wireless communication protocol capabilities can enable communications with the portable electronic devices. In a particular embodiment, the EGM can include a wireless interface compatible with a near-field wireless communication protocol.

In a particular embodiment, an EGM can be configured to redeem and issue both virtual ticket vouchers and printed ticket vouchers. The virtual ticket vouchers can be redeemed on other EGMs for credits used to place wagers on a game of chance generated or can be redeemed at a redemption kiosk for cash. The virtual ticket vouchers can be stored on a patron-controlled portable electronic device. In one embodiment, the virtual ticket vouchers can be compatible with existing cashless voucher handling systems that provide for the issuance and redemption of printed ticket vouchers. Thus, the cashless voucher handling system can be configured to provide for the validation, redemption and issuance of both printed ticket vouchers and virtual ticket vouchers.

On aspect of the embodiments described herein is related to a gaming device. The gaming device can be generally characterized as including: 1) a first input button for generating a signal to request an electronic cash-in transaction; 2) a second input button for generating a signal to request an electronic cash-out transaction; 3) a wireless interface configured to communicate with a portable electronic device; 4) a communication interface for communicating with a game controller on an electronic gaming machine; 5) a power interface from receiving power from the electronic gaming machine and a controller. The controller can include a processor a memory.

The controller can be configured to 1) receive the signal to request the electronic cash-in transaction; 2) receive via the wireless interface a virtual ticket voucher from the portable electronic device; 3) send virtual ticket voucher information to the game controller; 4) receive the signal to request the virtual cash-out transaction; 5) send a message to the game controller requesting the electronic cash-out transaction; 6) receive a ticket voucher validation number and an amount associated with the ticket voucher validation number from the game controller and 7) send to the portable electronic device via the wireless interface the virtual ticket voucher including the ticket voucher validation number and the amount.

The game controller can be configured to 1) control a wager-based game played on the electronic gaming machine; 2) issue virtual ticket voucher and printed ticket vouchers, 3) receive an indication, separate from the cash out button signal, to transfer value from the EGM via a virtual ticket voucher, receive a validation number from the validation server via the network interface, generate a virtual ticket voucher including the validation number, issue the virtual ticket voucher by transmitting the virtual ticket voucher to the portable electronic device via the wireless interface; and 4) cancel the virtual ticket voucher transaction initiated in response to receiving the indication to transfer value from the EGM via the virtual ticket voucher and issue a printed ticket voucher including the validation number by instructing the printer to generate the printed ticket voucher.

In particular embodiments, the gaming device can further include a mechanism for reading magnetic striped cards and/or smart cards where the controller is configured to operate the gaming device as a card reader. In addition, the gaming device can further include a mechanism for generating printed ticket vouchers where the controller is configured to operate the gaming device as a printer. Further, the gaming device can include a mechanism for accepting and reading data from printed ticket vouchers and currency bills where the controller is configured to operate the gaming device as a bill validator. Also, the gaming device can further include a network interface for communicating with a loyalty program server and a mechanism for inputting loyalty program information where the controller is further configured to operate the gaming device as a player tracking unit.

Another aspect of the embodiments described herein can be related to a bill validator. The bill validator can be generally characterized as including 1) a first input button for generating a signal to request an electronic cash-in transaction; 2) a wireless interface configured to communicate with a portable electronic device; 3) a communication interface for communicating with a game controller on an electronic gaming machine; 4) a power interface from receiving power from the electronic gaming machine; 5) a first mechanism for receiving currency bills or printed ticket vouchers and reading information from the currency bills or the printed ticket vouchers; 6) a second mechanism for storing validated currency bill or validated printed ticket vouchers to a cash box and 7) a controller including a processor and a memory. The controller can be configured to a) receive the signal to request the electronic cash-in transaction; b) receive via the wireless interface a virtual ticket voucher from the portable electronic device; c) send virtual ticket voucher information to the game controller; d) receive via the first mechanism printed ticket voucher information, e) send to the game controller the printed ticket voucher information; and f) eject non-valid printed ticket vouchers.

Yet another aspect of the embodiments described herein can be related to a printer. The printer can be generally characterized as including 1) a first input button for generating a signal to request an electronic cash-out transaction; 2) a wireless interface configured to communicate with a portable electronic device; 3) a communication interface for communicating with a game controller on an electronic gaming machine; 4) a power interface from receiving power from the electronic gaming machine; 5) a first mechanism for generating and outputting printed ticket vouchers; and 6) a controller including a processor and a memory. The controller configured to 1) receive the signal to request the electronic cash-out transaction; 2) receive a ticket validation number and an amount associated with the ticket validation number from the game controller; 3) generate a printed ticket voucher including the ticket validation number and the amount 4) generate a virtual ticket voucher including the ticket validation number and the amount, 5) output the printed ticket voucher and 6) send to the portable electronic device via the wireless interface the virtual ticket voucher.

## BRIEF DESCRIPTION OF THE DRAWINGS

The embodiments will be readily understood by the following detailed description in conjunction with the accompanying drawings, wherein like reference numerals designate like structural elements, and in which:

FIG. **1** is a perspective drawing of a gaming system including virtual ticket-in and ticket-out services in accordance with the described embodiments.

FIG. **2** is a block diagram of an electronic gaming machine configured for virtual ticket-in and ticket-out services in accordance with the described embodiments.

FIG. **3**A is a block diagram of an electronic gaming machine including a retrofit device for providing virtual ticket-in and ticket-out services in accordance with the described embodiments.

FIG. **3**B is a block diagram of an electronic gaming machine including a bill acceptor and a printer for providing virtual ticket-in and ticket-out services in accordance with the described embodiments.

FIG. **4**A shows a block diagram of a system including remote creation, validation and redemption of virtual tickets in accordance with the described embodiments.

FIGS. **4**B and **4**C show block diagrams of an application for managing virtual tickets on a portable electronic device in accordance with the described embodiments.

FIG. **5**A is a method in a gaming machine for redeeming virtual ticket vouchers in accordance with the described embodiments.

FIG. **5**B is a method in a gaming machine for issuing virtual ticket vouchers on a gaming machine.

FIG. **6** shows a block diagram of a gaming device in accordance with the described embodiments.

FIG. **7** shows a perspective drawing of a gaming device in accordance with the described embodiments.

## DESCRIBED EMBODIMENTS

In the following paper, numerous specific details are set forth to provide a thorough understanding of the concepts underlying the described embodiments. It will be apparent, however, to one skilled in the art that the described embodiments may be practiced without some or all of these specific details. In other instances, well known process steps have not been described in detail in order to avoid unnecessarily obscuring the underlying concepts.

A gaming system compatible with portable electronic devices controlled by users of the gaming system is described. In one embodiment, the portable electronic devices can be configured to store and transmit virtual ticket voucher information to an EGM or a redemption kiosk and receive virtual ticket voucher information associated with a virtual ticket voucher issued from the EGM. The virtual ticket vouchers can be redeemed on the EGM for credits used to place wagers on a game of chance or can be redeemed for cash at a redemption kiosk. The EGM can be configured to issue virtual ticket vouchers to transfer credits from the EGM. In one embodiment, the virtual ticket vouchers can be made compatible with existing cashless handling systems that provide for the issuance and redemption of printed ticket vouchers with little modification to the

existing cashless handling system. Thus, the cashless system can be configured to provide for the validation, redemption and issuance of both printed ticket vouchers and virtual ticket vouchers.

With respect to the following figures, methods and apparatus that allow a cashless system to include virtual ticket vouchers is described. In particular, with respect to FIG. **1** and interactions between a portable electronic device and an EGM with a game controller configured to provide virtual ticket-in and ticket-out services are described. With respect to FIGS. **3**A and **3**B, an EGM retrofitted with one or more devices that provide virtual ticket-in and/or virtual ticket-out services is described. With respect to FIG. **4**A interactions between a portable electronic device and a remote server that provides virtual ticket voucher issuance and redemption capabilities is described. A voucher management application for managing virtual ticket vouchers on a portable electronic device is described with respect to FIGS. **4**B and **4**C. Methods of issuing and redeeming virtual ticket vouchers in an EGM are described with respect to FIGS. **5**A and **5**B. Finally, details of gaming devices and gaming systems compatible with virtual ticket-in and virtual ticket-out services are described.

External Interface and EGM-Portable Device Interactions

FIG. **1** is a perspective drawing of a gaming system including virtual ticket-in and ticket-out services in accordance with the described embodiments. For the purposes of illustration, a gaming system server **10** is shown connected to an electronic gaming machine (EGM) **2**. In other embodiments, the EGM **2** can be connected to multiple servers and the gaming system server **10** can be connected to multiple EGMs. EGM **2** is configured to communicate with a portable electronic device **34**. Further, one or more gaming system servers, such as **10**, can be configured to communicate with portable electronic devices, such as **34**.

On the EGM, the communication with the portable electronic device can occur through a wireless or a wired interface. In various embodiments, for the purposes of communicating with a portable electronic device, the EGM **2** can configured with a single wireless interface but no wired interfaces, multiple wireless interfaces but no wired interfaces, a single wired interface but no wireless interfaces, multiple wired interfaces but no wireless interfaces or a combination of wireless and wired interfaces. Thus, the communication interfaces described with respect to FIG. **1** are for the purposes of illustration and are not meant to be limiting.

In a particular embodiment, one or more of the wired or wireless interfaces can be dedicated to operator functions and may only recognize particular devices carried by an operator. For instance, a wireless interface can be dedicated to allowing an operator perform maintenance functions, such as receiving diagnostic information from the EGM. In another example, a wireless interface can be dedicated towards performing operator functions, such as placing the EGM in a dispute resolution mode, a hand-pay mode or a W-2 (tax requirement) mode. Again, the EGM can be configured to recognize particular operator registered devices via this interface. In yet another example, a wireless interface can dedicated only to premium customers. Via the dedicated wireless interface and their portable electronic device, a premium customer may be able to access to certain functions on the EGM that are not available to other customers.

As will be discussed in more detail below, one or more of the wireless or wired interface can be used for transactions involving cash handling on the EGM **2**. An interface can be dedicated for this purpose. For instance, a dedicated cash handling interface can be configured only to receive information associated with cash handling. In other embodiments, a wired or wireless interface on the EGM can be used for cash handling transactions with the portable electronic device as well as more general communications, such as transferring information that can be used in a loyalty program or a social media application.

As follows, the EGM **2** is briefly described and then cash handling interactions involving a portable electronic device **34**, the EGM **2** and gaming system server **10** are discussed. Additional details of the EGM are described with respect to FIGS. **6** and **7**. The EGM **2** can include multiple displays, such as displays **14** and **16**. The displays can be used to output video images associated with a wager-based game play, such as a presentation associated with a main game or a bonus game. Game play decisions can be entered via a player input panel **28**. In addition, displays **14** and/or **16** can be provided with a touch screen interface and an associated touch screen controller. The touch screen interfaces can be used to enter information about decisions associated with game play as well as information associated with other functions offered on a gaming machine.

The EGM **2** can include a number of devices used in cash handling transactions. The cash handling devices can include 1) a bill acceptor **22** configured to accept cash and/or ticket vouchers, a printer **38** configured to generate printed ticket vouchers and 3) a card reader **36** which can be configured to read a magnetic striped card or a smart card. The magnetic striped card or the smart card can be used to transfer funds, such as funds stored on a debit card. Further, the card reader **36** can be used to read account information associated with a loyalty program account.

In a particular embodiment, a wireless interface **18** can be configured to receive information, such as information associated with a virtual ticket voucher, from a portable electronic device **34**. As an example, the wireless interface **18** can be configured to implement a near field communication (NFC) protocol. The NFC protocol is designed with a communication range of 4 cm or less. NFC operates at 13.56 MHz on ISO/IEC 18000-3 air interface and at rates ranging from 106 kbit/s to 848 kbit/s. NFC can involve an initiator and a target. The initiator actively generates an RF field that can power a passive target. This enables NFC targets to take very simple form factors such as tags, stickers, key fobs, or cards that do not require batteries. NFC peer-to-peer communication is of course possible, where both devices are powered. For instance, the electronic device **34** and EGM **2** can be configured to implement a peer-to-peer communication.

Wireless interface **18** can be also used to accept information from a digital wallet application, such an E-wallet application. E-wallets can store passwords, credit card numbers, email contacts and identification data like driver's license or social security numbers. In some instances, an E-wallet can be linked to a bank account. In the embodiments described herein, an E-wallet application can be used to transfer "cash" electronically to an EGM that can be used for wagers. When funds are received electronically, such as via an E-wallet transaction, the EGM **2** can be configured to store an electronic record of the transaction in a manner similar to cash transactions involving physical currency.

As is discussed in more detail with respect to FIGS. **6** and **7**, other wireless interface protocols can also be implemented on EGM **2**. For instance, the EGM **2** can be configured to provide Wi-Fi and/or Bluetooth™ communications. These protocols can be used in lieu of or in

combination with NFC. For instance, an NFC communication can be used to instantiate a Wi-Fi or Bluetooth™ communication between the EGM **2** and portable electronic device **34**, such as secure pairing using one of these protocols. Further details of device pairing are described below with respect to FIG. **2**.

In particular embodiments, the portable electronic device **34** can be configured with an application that manages virtual ticket vouchers that are redeemable for game play. On the gaming system side, the virtual ticket vouchers can be generated in a manner similar to printed ticket vouchers. With printed ticket voucher, a gaming system server, such as **10**, can be configured to generate and store a validation number associated with a particular amount of cash or credits. The validation number and the amount associated with the validation number can be stored in a ticket voucher database. The validation number and the amount associated with the validation are stored so that when the ticket voucher is later presented for redemption it can be validated. The validation can be performed by the gaming system server or another device in the gaming system.

Next, the gaming system server can send information that allows the validation number to be located in the ticket voucher database to the EGM **2**. Via the printer **38**, the information that allows the ticket voucher to be located in the ticket voucher database and the amount associated with the ticket voucher can be printed on a blank ticket voucher and then output. The information can be printed in different formats, such as in a text format and/or in a symbol format, such as a bar-code. Later, to redeem the ticket, information stored on the printed ticket voucher can be read and parsed at an EGM, a redemption kiosk or a cashier station. The information read from the ticket can be compared to information stored in server **10** when the ticket voucher was created. If the server determines information matches and the ticket voucher hasn't be previously redeemed, then the ticket voucher can be redeemed for cash or additional game play.

Similar to a printed ticket voucher, to generate a virtual ticket voucher, the EGM **2** can send a request to server **10** to generate a unique identification number for a cash amount to be transferred off of the EGM **2**. Alternatively, the EGM **2** or some other device can generate the unique identification number that is sent to sever **2**. The gaming system server can store the identification number and the cash amount associated with the ticket as well as the unique information associated with the EGM **2**. The unique EGM information can be later used for reconciliation purposes. Then, the unique identification number can be sent to the EGM **2**.

As described above, the virtual ticket vouchers and printed ticket vouchers can be generated in the same manner and with little modification to an existing cashless system. However, there are some possible differences as described as follows. One difference can be that the server **10** is configured to record whether the ticket voucher is issued as a printed ticket or a virtual ticket. Printed ticket vouchers can include an identification number, such as xx-xxxxxx-xx. The identification number can be modified to indicate whether it is associated with a virtual ticket voucher or a printed ticket voucher. For instance, 01-xxxxxx-xx can be used for printed ticket vouchers while 02-xxxxxx-xx can be used for virtual ticket vouchers.

A determination of whether the ticket voucher is generated as a virtual ticket voucher or printed ticket voucher can occur on the EGM **2**. A default position of the EGM **2** can be to generate a printed ticket voucher if a requested virtual ticket voucher is not successfully generated. For instance, as is described in more detail below, can request a virtual ticket voucher accidently, cancel it and request a printed ticket voucher. Thus, an indication of whether the requested virtual ticket voucher is issued as virtual ticket or a printed ticket voucher can be received at the server in an acknowledgement the EGM **2** and the server can change the format in which the ticket voucher has been issued if it has changed.

Denoting whether the ticket voucher is a printed or a virtual ticket voucher can be important for record keeping purposes. In the case of a redeemed printed ticket voucher, it is expected that there will be a corresponding piece of paper when the ticket is redeemed. For virtual printed tickets, there may not be such a record. For instance, when a printed ticket is redeemed at an EGM, it is expected that when the cash box is subsequently removed from the EGM, the cash box includes the printed ticket. The presence or non-presence of the printed ticket can be identified in a soft count when the cash in the cash box is counted.

A soft count is one process for counting banknotes in a casino or bank. The soft count rooms are usually among the most secure places due to the large amounts of cash that can be on hand at any one time. The counting is usually done by accounting professionals called soft counters, using computer spreadsheets. Typically, a soft count room contains a large table upon which the currency to be counted is placed, known as the "count table". Count room personnel manually organize the currency so that it can be easily counted by hand or by a counting machine. Most modern count rooms are equipped with high-speed computerized machines that perform the counting process.

In a particular embodiment, the cash box on the EGM **2** can be equipped with a memory. Virtual ticket voucher information can be loaded to the memory as virtual ticket voucher information tickets are redeemed at the EGM **2**. The bill acceptor or the EGM **2** can be configured to transfer this information to the memory. The memory may also include a record of the printed ticket vouchers received into the cash box. Further, it can include a combined transaction list including cash transactions, printed ticketed transaction and virtual ticket transactions in the order in which they were generated. When the cash box is removed and the bills and printed ticket vouchers are counted, the memory on the cash box can be interrogated for virtual ticket voucher information and other transaction information, if it is stored, as part of the soft count process. Thus, the cash box can have a complete record of cash and ticket vouchers accepted at the EGM **2** where a portion of the ticket vouchers can be printed ticket vouchers and a portion of the ticket vouchers can be virtual ticket vouchers stored electronically.

If desired, equivalent printed vouchers can be generated from the virtual ticket voucher information to be used as part of the soft count process from the information stored in the cash box. For instance, the cash box can be connected to a printer where sheets including one or of the virtual ticket vouchers can be generated. For example, 4 ticket vouchers per sheet or 8 ticket vouchers per sheet can be generated. The virtual ticket vouchers can be output in a format similar to a printed ticket voucher, such as including a bar-code and other information normally included on a printed ticket. The printed sheets including virtual ticket information can be stored for some time period for auditing purposes.

In one embodiment, the virtual ticket voucher can be created in response to receiving an input from the E-cash out button **26**. After the E-cash out button activation is detected, if credits remain on the EGM **2**, the EGM **2** can be configured to send the request for the unique validation number and cash amount for the voucher to server **10** via

connection **12**. In response, the EGM **2** can receive the unique validation number from the server **10**. Based upon the information received from the server, the EGM can generate a virtual ticket voucher.

In one embodiment, an image of the virtual ticket voucher can be generated and output to a display on the EGM **2**, such as **14** and **16**. As an example, an image of a virtual ticket voucher **40** is shown. The front of the virtual ticket voucher can be displayed or the front and back of the virtual ticket voucher can be displayed. In one embodiment, a virtual ticket voucher that is displayed can be formatted in the same manner as a printed ticket voucher, such that it looks like a printed ticket voucher. For instance, the front of the printed ticket voucher might include a bar-code, a cash value, a location where it was issued, a unique identification number. The back of the ticket can include a disclaimer such as,

"This ticket is a bearer instrument. The operator is not responsible for lost or stolen tickets. The player is responsible for checking this ticket for accuracy, including the date and amounts shown, and must immediately notify an attendant of any error. Tickets are void if illegible, altered, counterfeit, incomplete, produced in error, or fail any validation testing. Neither the operator nor IGT™ shall be responsible for the issuance, validation or payment of lost, stolen, counterfeit or multiple EZ Pay cash vouchers. IGT™ and the operator shall be discharged from any and all liability upon payment of any claim arising from the redemption of the first cash voucher presented with a valid bar code. IGT™ and the operator reserve the right to withhold validation and payment pending a determination whether the cash voucher has been stolen or lost"

To prevent someone from taking a picture of the displayed image and converting it to a virtual ticket voucher and trying to redeem, a portion of information needed to redeem the virtual ticket voucher may not be displayed. For instance, a second unique validation number can be transmitted from the EGM **2** to the portable electronic device **34** that is needed to redeem the ticket. This second unique validation number may not be rendered in the image of the virtual ticket voucher displayed on the EGM **2**. Besides, ticket information, such as a second unique validation number, data can be sent to the portable electronic device that allows an image of virtual ticket voucher rendered on EGM **2** to also be rendered on the user's portable electronic device.

The format of the images of the virtual ticket voucher can vary from gaming enterprise to gaming enterprise and can further vary from location to location within the gaming enterprise. Further, the format of the virtual ticket images can vary from EGM **2** to EGM **2** within a location if the print capabilities in each EGM are different such that it affects the format of the printed ticket voucher that is output. In other embodiments, the generated virtual ticket voucher image displayed on EGM **2** can be different from printed ticket vouchers. For instance, the system can be configured to allow a user to select a custom format for their virtual ticket vouchers. The EGM **2** can be configured to generate and display a custom formatted virtual ticket voucher to the display.

In one embodiment, the custom format virtual ticket voucher information can be stored on their portable electronic device **34** and transmitted to the EGM **2**, such as via a wireless or wired communication connect between device **34** and EGM **2**. As another example, the custom format virtual ticket voucher information can be stored in a loyalty program account on a gaming system server. This information can be retrieved when the user provides loyalty program account information to the EGM **2**. In another embodiment, the images of the virtual ticket vouchers that are displayed on the EGM **2** can be a standard format, such as to match the format of the printed ticket vouchers issued at the EGM **2**. The virtual ticket voucher information can be transmitted to the user's portable electronic device. Then, via an application running on the user's portable electronic device **34**, the user can select a custom format to display the virtual ticket voucher. In yet other embodiments, the images of the virtual ticket voucher can be selected to match a theme of the game or reflect a theme associated with a calendar event, such as a holiday them.

In alternate embodiments, an image of the virtual ticket voucher doesn't have to be displayed. For instance, a message might be output to display **16** of "please retrieve your virtual ticket voucher for X dollars" but an image of the virtual ticket voucher may not be generated. In another example, a bezel **20** around interface **18** may light-up in a particular color and/or flash with a particular light pattern to indicate the virtual ticket voucher is ready. In other embodiments, a combination of a message, an image of the virtual ticket voucher and/or a lighted bezel can be used. For instance, a formatted virtual ticket voucher can be output can be output to display **16** with a message and the bezel **20** can change state to indicate that the virtual ticket voucher is ready.

When the virtual ticket voucher is ready, the EGM **2** can indicate it is ready to transfer the virtual voucher, such as via changing bezel state **20**. In response, when a NFC protocol is used, the portable electronic device **34** can be brought in proximity to even in contact with the outer surface of interface **18**. In one embodiment, for security purposes, a virtual ticket voucher application executed on the portable electronic **34** may have to be active for a transaction to take place, i.e., for the portable electronic device **34** to receive virtual ticket voucher information from the EGM **2**. Similarly, as is described in more detail below, the virtual ticket voucher may have to be active on the portable electronic device **34** to transmit virtual ticket voucher information stored on the portable electronic device **34** to the EGM **2**.

If another wireless protocol with a longer range is utilized or a wired connection is utilized, it may not be necessary for the portable electronic device to be placed in close proximity to interface **18**. In response to receiving virtual ticket voucher information from the EGM **2**, information about the virtual ticket voucher can be output on the display **32** of the portable electronic device **32**. The information that is output to display **32** can be selected to match the format of information output to display **16** on the EGM **2**. For instance, if a virtual ticket voucher image is output to display **16**, then the virtual voucher image can also appear on the user's device after the transfer of information. With virtual ticket voucher information simultaneously output on both displays, the user can compare the images on the display **32** and the EGM **2** to visually confirm the successful transfer.

When the virtual ticket voucher is ready and the interface **18** and optionally the bezel **20** have been activated, the EGM **2** may begin a countdown timer. If a successful transfer is not made to a portable electronic device, such as **34**, within the time period associated with the countdown timer, the EGM **2** can convert the virtual ticket voucher transaction to a printed ticket voucher transaction and generate a printed ticket that is output via the printer **38**. If the type of voucher (virtual or printed) is indicated by the identification number on the ticket, then the EGM **2** can be configured to alter the identification number that is printed on the printed ticket voucher so that it now reflects a number that is consistent

with a printed ticket voucher. In addition, the EGM **2** can contact the server **10** to notify in the change in format and number for the voucher and the server **10** can store this information. In one embodiment, a cancel button can be provided on the EGM **2** that switches a cash out transaction from a virtual ticket voucher to a printed ticket voucher.

A virtual ticket voucher transaction may time out or a user may wish to cancel a virtual ticket voucher for a number a reasons. For instance, the user may cancel because they realize they have forgotten or lost their phone. In another example, the user may have requested a virtual ticket transaction accidently, such as by hitting the E-cash out button instead of the cash out button. In another example, their portable electronic device **34** may have run out of charge or may not be functioning properly. In yet another example, the interface **18** may not be functioning properly, the user's portable electronic device may not be functioning properly or a combination of problems with the interface **18** or the user's portable electronic device may prevent the transaction from occurring.

After the virtual ticket voucher is transferred to the user's portable electronic device, an application executing on the portable electronic device can be executed that allows the user to manage their virtual ticket vouchers. For instance, as mentioned above, the application may allow the user to customize the appearance of the virtual ticket voucher in the application. In another example, the application can be configured to keep track of when printed ticket vouchers have been received and an expiration date of the ticket. The application can be configured to notify the user if a virtual ticket voucher is nearing its expiration date. In yet another example, the application can be configured to exchange information with an E-wallet application or can include E-wallet functionality. In a further example, virtual ticket voucher information can be stored in the "cloud," i.e. remote distributed storage, and the application can be configured to access and retrieve virtual ticket voucher information stored in the "cloud." Further details of this application are described with respect to FIGS. **4**B and **4**C.

When information is transferred wirelessly between the EGM **2** and the portable electronic device, the EGM **2** can be configured to receive and store unique device identification information associated with portable electronic device. Further, the portable electronic device can be configured to receive and store information associated with the EGM **2**. The EGM **2** can be configured to associate the unique device identification information with the virtual ticket voucher that was issued. The unique portable device identification information can be stored on the EGM **2** and also sent to a validation server, such as server **10**, where it can also be associated with the virtual ticket voucher information that was generated.

In one embodiment, as a requirement or optionally if the user desires, the unique portable device identification information can be used in the redemption of the virtual ticket voucher. When the virtual ticket voucher is presented at a redemption device, such as EGM **2**, the unique identification information associated with the portable electronic device and the unique identification information associated with the virtual ticket voucher can be received at the redemption device and transmitted to a validation device, such as server **10**. Then, the validation device can compare the received virtual ticket voucher information and portable electronic device identification information to the virtual ticket voucher information and portable device information stored when the virtual ticket voucher was issued. If unique player identification information is known, such as information associated with a loyalty program, then this information can also be included in the validation process.

When the information matches, then the validation device can send a message to the redemption device to redeem the virtual ticket voucher at the amount associated with the virtual ticket voucher. If the portable electronic device information matches and the virtual ticket voucher has already been redeemed, then the validation device can send a message to the redemption device including this information. In response, the redemption device can display a message, such as ticket previously redeemed. If the portable device information doesn't match but the virtual ticket voucher information matches, the validation device can send a message to the redemption device regarding this state. In response, in one embodiment, the redemption device can display a message, such as "Virtual ticket voucher is invalid" or "Device information is invalid go to the cashier station to redeem the ticket." At the cashier station, the user may have to present identification information to redeem the virtual ticket voucher that is stored on the portable electronic device with unique device identification information that doesn't match the portable electronic device to which the ticket voucher was issued. If the virtual ticket voucher information doesn't match any of the records on the validation device, then the validation device can send a message indicating this state to the redemption device. In response, the redemption device can display a message, such as "ticket voucher invalid."

The portable electronic device information received that is gathered during an issuance of a virtual ticket voucher or the redemption of a virtual ticket voucher can be used in a dispute resolution process. A patron may decide that an amount of a virtual ticket voucher transmitted from the EGM **2** to the portable electronic device **34** is incorrect or an amount of a virtual ticket voucher transmitted from the portable electronic device **34** to the EGM **2** is incorrect. In response, the player may request the presence of an operator. The operator can place the EGM **2** in a dispute resolution mode where a record of virtual vouchers issued from the EGM **2** or accepted on the EGM **2** can be accessed.

The dispute resolution mode may allow information regarding virtual ticket vouchers issued or accepted at the EGM **2** to be retrieved from memory and displayed on the EGM **2**. The operator may be able scroll the ticket voucher records in order of acceptance or issuance. In one embodiment, a player may be able to couple their portable electronic device **34** to the interface **18**. In response, the EGM **2** can be configured to search the stored ticket voucher records and display information regarding any virtual ticket vouchers issued to the portable electronic device **34** or received from the portable electronic device **34**. In one embodiment, the EGM **2** can be configured to reissue a virtual ticket voucher to the portable electronic device, such as if the player convinces the operator that the information regarding a virtual ticket voucher issued to the portable electronic device has been lost for some reason.

In other embodiments, virtual ticket voucher information can be accessed via a secondary device, such as a player tracking unit or via a "service window" on the EGM **2**. For instance, an electronic log of virtual voucher activity and/or virtual cash activities can be stored on a remote host which can be accessible via a service window on the EGM **2**. Further details of service windows applications are described below with respect to FIG. **6**.

As described above, the redemption of virtual ticket voucher stored on a portable electronic device, such as **34**, can involve transferring virtual ticket voucher information

from the portable electronic device **34** to a redemption device, such as EGM **2**. On EGM **2**, the cash value associated with the virtual ticket voucher can be converted to credits where the credits can be used for wagers on a game of chance. In one embodiment, the virtual ticket voucher transfer from device **34** to EGM **2** can be initiated when the EGM **2** detects an actuation of the E-cash-in button **24**.

In a particular embodiment, restricted credits can be transferred to the EGM **2** via a virtual ticket voucher. For instance, restricted credits can be transferred to the EGM **2** that are available for wagers but can't be redeemed for cash. In other embodiments, a virtual ticket voucher can be redeemed to unlock a feature on the EGM **2**, such as a particular bonus mode. In yet other embodiments, a virtual ticket voucher can be used to transfer information associated with persistent gaming, such as progress or achievements a player has previously obtained playing a game. In other embodiments, a virtual ticket voucher can be used to 1) transfer tax information associated with an EGM pay out, such as a W2G receipt, 2) report metering information associated with the EGM **2** and 3) report diagnostic information associated with the EGM **2**, such as when the EGM is not functioning properly.

In response to detecting the actuation of button **24**, the EGM **2** can change the state of interface **18** so that it is enabled to receive an information transfer from a portable electronic device, such as **34**. Further, the change in state of the interface **18** can be indicated by a change in state of a status indicator associated with interface **18**. For instance, a bezel **20** surrounding the interface **18** can be lit up with a particular color and/or light pattern to indicate the interface **18** is ready to receive virtual ticket voucher information. Further, if enabled, a sound pattern can be emitted from the status indicator to indicate it is ready to receive virtual ticket voucher information from a portable electronic device.

In a particular embodiment, when interface **18** is activated a countdown time can be started. If the countdown timer reaches a termination value, such a zero, before a communication is established with a portable electronic device, then the interface **18** can be turned off and the status indicator associated with interface **18** can be changed to indicate it is not ready to receive information. For instance, the bezel **20** surrounding the interface can be lit up with a particular light patter and/or color to indicate a transition state. In addition, the status indicator can be configured to indicate the transition from an on state to and off state is about to occur. For instance, the bezel **20** can change to a particular color and flash at an increasing rate before the interface **18** is turned off. A particular sound pattern can also be emitted to indicate the transition.

In other embodiments, the interface **18** can be configured to support an active communication session between the portable electronic device and the interface **18**. For instance, interface **18** can support NFC communications and Bluetooth™ communications. A user can tap a NFC and Bluetooth™ enabled device to the interface **18**. The tap can transmit, via NFC, data which allows a Bluetooth™ communication pairing to be set up between the portable electronic device and the EGM **2**. The communication pairing can utilize encrypted communications. The status indicator **19** can be used to indicate whether the communication pairing is active or not between the portable electronic device and the EGM **2**.

In one embodiment, the application that allows the transfer of the virtual ticket voucher from the portable electronic device to the EGM **2** may have to be active on the portable electronic device **34** before a transfer can occur. Further, a secondary authentication method, such as entering a PIN correctly, may be required on the portable electronic device **34** before the transfer is allowed to occur. In one embodiment, the use of a secondary authentication method can be triggered based upon an amount of the ticket voucher that is to be redeemed such that vouchers above a certain amount require a secondary authentication while vouchers below a certain amount do not require a secondary authentication.

During the redemption process, an image of the virtual ticket voucher that is to be redeemed can be displayed on the display **32** of the portable electronic device **34**. When the virtual ticket voucher information is successfully transmitted to EGM **2**, it can be displayed on the EGM **2**, such as in an image of a ticket voucher **40**. Then, the user can compare the virtual ticket voucher information displayed on the display **32** to the virtual ticket voucher information displayed on display **16** or some other display on the EGM **2**.

In one embodiment, an image data associated with a virtual ticket voucher and/or formatting information can be transmitted from the portable electronic device **34** to the EGM **2** so that the image rendered on the EGM **2** appears similar to the image rendered on portable electronic device **34**. As an example, as described above, an application running on portable electronic device **34** can be configured to allow a user to customize the appearance of virtual ticket vouchers displayed on their device. Thus, some of the custom formatting information related to the virtual ticket voucher appearance can be transferred from the portable electronic device to the EGM.

In another embodiment, the image rendered of a virtual ticket voucher can be a standard format that is not affected by formatting information received from the portable electronic. As described above, the only front of the virtual ticket voucher or the front and back of the virtual ticket voucher can be rendered on a display on the EGM **2**. In addition as described above, an image of the virtual ticket voucher doesn't have to be rendered on the EGM **2**. For instance, when a virtual ticket voucher is accepted, the EGM **2** can be configured to display a message such as "virtual ticket voucher for x dollars received" where "x" is the amount associated with the ticket.

After the virtual ticket voucher is successfully received, the EGM **2** can send received virtual ticket information to a validation device, such as gaming system server **10**. The validation device can determine whether the information associated with the virtual ticket voucher is associated with a valid virtual ticket voucher that hasn't already been redeemed. When the information is valid, the validation device can send a message to the redemption device, such as EGM **2**, to redeem the virtual ticket voucher for an amount that the validation server determines is associated with the virtual ticket voucher.

The redemption device can receive the message from the validation device and in response, redeem the ticket in some manner. For instance, in the case of the EGM **2**, the ticket can be redeemed for credits. As another example, a redemption kiosk, in response to receiving a validation message can dispense the cash amount associated with the virtual ticket voucher. After redeeming the virtual ticket voucher, the redemption device can send a message to the validation device indicating it has successfully redeemed the virtual ticket voucher. In response, the validation device can store information indicating the virtual ticket voucher has been redeemed. Thus, if the person controlling the portable electronic device attempts to redeem the virtual ticket voucher again, the validation device can be configured to indicate the transaction is invalid because the virtual ticket voucher has

been previously redeemed. The redemption device, such as EGM **2**, can be configured to store information regarding the virtual ticket voucher that has been received and optionally unique device identification information from the portable electronic device that transmitted the virtual ticket voucher information to the redemption device. The redemption device can also be configured to send the portable electronic device information to a remote device, such as server **10**.

There are a number of potential advantages of providing virtual ticket voucher functionality on an EGM. In the case of virtual ticket voucher issuance, one advantage is that the stack of blank tickets used to generate printed ticket vouchers may have to be refilled less frequently. This reduces the material costs associated with purchasing tickets and the labor costs associated with refilling the blank ticket stack because the rate at which printed tickets are generated is reduced. Further, it is better for the environment since less paper is used. In the case of virtual ticket voucher redemption, one advantage is that the cash box associated with the bill/ticket acceptor may fill up more slowly. Thus, the labor costs associated with removing and replacing a full cash box can be reduced since the cash box will fill up more slowly. Further, the soft count process can be simplified reducing labor costs because less printed tickets need to be handled during the soft count process.

Internal Device Control

Next details of internal configurations of an EGM configured to redeem and/or issue virtual ticket vouchers are described. With respect to FIG. **2**, an EGM with a game controller modified to redeem and/or issue virtual ticket vouchers is discussed. With respect to FIGS. **3**A and **3**B, EGMs are described where the game controller remains unmodified and where virtual ticket-in/ticket-out functions are performed by retrofit devices, such as a retrofit printer and/or a retrofit bill/ticket acceptor. FIG. **2** is a block diagram of an electronic gaming machine **2** configured for virtual ticket-in and ticket-out services.

The EGM **2** is coupled to a validation server **68** and an accounting server **70** via a network interface **56**. The validation server **68** can be configured to 1) generate validation numbers for printed and virtual ticket vouchers issued at EGM **2** and 2) validate virtual ticket and printed ticket vouchers received at the EGM **2**. The validation server **68** can be part of a cashless system. The accounting server **70** can be configured to receive accounting information, such as coin-in/coin-out, from the EGM **2**. The accounting server **70** can be part of a loyalty program system where members can earn points redeemable for comps based upon their game play. In one embodiment, the network interface **56** can be a smart interface board (SMIB) associated with a player tracking system.

The virtual ticket voucher processing, involving such steps as validation, redemption and issuance of virtual ticket vouchers described above with respect to FIG. **1**, can be handled by the virtual voucher processing logic **74** on the game controller **50**. The control of the wireless interface **18**, such as powering it on and off in response to certain events, establishing communication sessions with portable electronic devices and sending information via the wireless interface **18**, can be handled by the wireless interface control **72**. As described above, the EGM **2** can include multiple wireless interfaces and game controller **50** can be configured to communicate using multiple wireless communication protocols.

Virtual ticket voucher information can be transmitted and received via the wireless interface **18**. In one embodiment, the wireless interface **18** can be integrated into the cabinet of the EGM **2** (e.g., see FIG. **1**) and game controller **50** can be configured to communicate directly with and send control commands to the wireless interface **18**. In other embodiments, the wireless interface **18** can be integrated into a device mounted to and/or within the gaming machine cabinet, such as the printer **38**, the bill validator/voucher acceptor **22**, a card reader (not shown) or a player tracking unit (not shown). For instance, a wireless interface **18** can be integrated into a bezel surrounding a printer slot, a card reader slot or a bill/ticket acceptor slot. In yet another example, the wireless interface can be integrated into a player tracking unit.

In the embodiments where the wireless interface is embedded in a secondary device, such as a printer or a player tracking unit, the game controller **50** can optionally communicate via the wireless interface and send control commands to control the wireless interface via a secondary controller, such as printer controller or a player tracking controller. For instance, the game controller **50** can detect an actuation of the E-cash out button **26** and then send a command to the secondary device including the wireless interface to turn on the wireless interface. In the secondary device, a secondary device controller can simple forward the command to the wireless interface **18**, which can be configured to respond to the command from the game controller **50**. In another example, the secondary device controller can be configured to interpret the command received by the game controller **50** where the command received by the game controller can be at a high level and not understood by the wireless interface **18**. From the high-level command received from the game controller **50**, the secondary device controller can generate a low-level command understood by the wireless interface **18** that is incorporated in the secondary device.

In other embodiments, a secondary device can include virtual ticket voucher processing logic executed by a secondary controller. For instance, the printer **38** can include a printer controller capable of executing virtual ticket voucher processing logic and printed ticket logic and a wireless interface (Other examples of secondary devices with this capability can include but are not limited to a player tracking unit, a card reader or a bill validator). The game controller **50** can be configured to detect an actuation of the E-cash out button **26**. In response, the game controller **50** can send a high-level message to the printer **38**, such as "generate a virtual ticket voucher of a particular amount." In response to receiving the command from the game controller **50**, the printer controller can generate low-level commands to control various devices on the printer that allow the high-level command to be implemented. For instance, the printer controller can generate commands that 1) turn-on the wireless interface on the printer and change a status of a status indicator for the wireless interface on the printer to indicate it is "on," 2) receive device information from a portable electronic device and then construct and send a message that allows a virtual ticket voucher to be sent to the portable electronic device and 3) send an acknowledgement to the game controller when the virtual ticket voucher has been received. The acknowledgement can include unique identifier information associated with the portable electronic device that received the virtual ticket voucher.

The game controller **50** can be configured to logically recognize a secondary device with multiple functions as separate devices according to the functions. The game controller **50** can recognize the devices during a device enumeration process. For example, a card reader with card reader functions and a capability to accept virtual ticket

vouchers can present itself to the game controller **50** as a card reader **50** and a bill validator that accept virtual ticket vouchers. In this example, the game controller **50** may have already enumerated a first bill validator that accepts only cash and printed tickets. Thus, after the enumeration process, the game controller can logically be configured to control a card reader, a first bill validator that accepts cash and printed tickets and a second bill validator that accepts virtual ticket vouchers.

In yet other embodiments, the virtual ticketing voucher processing logic executed on a secondary device can be transparent to the game control controller **50**. For example, the game controller **50** may be simply configured to send a "print ticket voucher" command and the secondary controller can be configured to issue the ticket voucher as a virtual ticket voucher. For instance, a card reader with this capability can receive the "print ticket voucher" command and issue a virtual ticket voucher. The card reader can be configured to communicate with a remote host to receive ticket validation numbers to associate with the virtual ticket voucher and report the issuance of the virtual ticket voucher to the remote host. If the card reader is not able to issue the virtual ticket voucher and a printer is present, the card reader can forward the command to the printer to have it issue a printed ticket voucher.

If the game controller **50** doesn't receive an acknowledgement within some time period, the game controller **50** can send a command to the printer to cancel the virtual ticket voucher transaction and generate a printed voucher for the amount. In response, the printer controller can turn-off the wireless interface and change the status indicator for the wireless interface to indicate it is no longer on. Then, the printer controller can control various print devices used to issue a printed ticket voucher.

Returning to FIG. **2**, in various embodiments, the wireless interface **18** can include a wireless interface controller (not shown) separate from the game controller **50** for processing signals received at the wireless interface and for controlling signals emitted by the interface. The wireless interface controller can be configured to communicate directly with the game controller **50** or can communicate with a secondary controller that acts as an intermediary between the game controller **50** and the wireless controller. Via the interface **18**, information **34** regarding electronic cash transfers and virtual can be received and information **35** regarding virtual ticket vouchers. The received signals, such as signals associated with a virtual ticket voucher, can be parsed for information according to a particular wireless communication protocol, such as an NFC protocol. The parsing of information from received wireless signal data can be done within the wireless interface and then sent to the game controller **50** or the signal data can be sent the game controller **50** or a secondary controller and parsed within the game controller **50** or secondary controller (not shown).

The interface **18** can be configured to send information formatted in one or more different wireless communication protocols. For instance, as described above, the EGM **2** via the wireless interface **18** can be configured to communicate information formatted in a NFC compatible protocol. Although not shown, a wired connection can be used to receive virtual ticket voucher information as well as other types of information from a wired interface coupled to a portable electronic device. The communication protocol used for the wired communication connection can vary depending on the wired connection that is utilized. In one embodiment, it can be USB. In a particular embodiment, the physical connection can be a micro USB compatible connection.

In other embodiments embodiment, an NFC interface on an EGM **2** can be used to set-up a higher speed communication between the EGM **2** and another NFC enabled device such as smart phone. The higher speed communications can occur via wireless interface **18** or another wireless interface on the EGM **2**. The higher speed communication rates can be used for expanded content sharing. For instance, a NFC and Bluetooth enabled EGM can be tapped by an NFC and Bluetooth enabled smart phone to instantiate Bluetooth pairing between the devices. Instantiating pairing between a gaming device and an NFC enabled device, such as a smartphone, in this manner can save time related to searching, waiting, and entering codes. In another example, a gaming device can be configured as an NFC enabled router, such as a router supporting a Wi-Fi communication standard. Tapping an NFC enabled device to an NFC enabled and Wi-Fi enabled gaming device can be used to establish a Wi-Fi connection between the two devices.

As described above, the NFC communication can be used to exchange information to allow pairing to be established between a user-controlled device and the EGM **2**. For instance, Bluetooth™ pairing occurs when two Bluetooth devices agree to communicate with each other and establish a connection. In order to pair two Bluetooth wireless devices, a password (passkey) is exchanged between the two devices. The Passkey is a code shared by both Bluetooth devices, which proves that both users have agreed to pair with each other. After the passkey code is exchanged, an encrypted communication can be set up between the pair devices. In Wi-Fi paring, every pairing can be set up with WPA2 encryption or another type of encryption scheme to keep the transfer private. Wi-Fi Direct is an example of a protocol that can be used to establish point-to-point communications between two Wi-Fi devices. The protocol allows for a Wi-Fi device pair directly with another without having to first join a local network. The method makes it possible to share media from a phone, play multiplayer games or otherwise communicate directly, even when no router exists. Via pairing between the EGM **2** and a portable electronic device, a portable electronic device may be able to utilize some of the functionality of secondary devices residing on the EGM **2**. For instance, it may be possible for a player to print something from their portable electronic device using the printer **38** on the EGM **2** when it is paired to the EGM **2**.

The game controller **50** can be used to control a status of the wireless interface **18**, such as an "on" status where it is operable to receive wirelessly transmitted information from a portable electronic device or an "off" status where it is not operable to receive information. In particular embodiments, the game controller **50** can be configured to turn on the wireless interface in response to detecting an actuation of an E-cash in button **24** or an E-cash out button **26** (The actuation of the buttons can generate a signal which is received by the controller **50**). In various embodiments, the E-cash in button or the E-cash out button can be integrated into a player input panel on the EGM cabinet. Further, the E-cash in button **24** and/or the E-cash out button **26** can be integrated into a secondary device, such as on the printer **38**, the bill validator/voucher acceptor **22**, a card reader (not shown) or a player tracking unit (not shown).

The status of the wireless interface **18** and upcoming changes in status to the wireless interface **18** can be indicated by an interface status device **19**. The interface status

device **19** can include components, such as lights and/or audio devices. The game controller **50** can be configured to control the interface status device **19** in a way that indicates the state of the wireless interface **18**, such as on, off and about to change from on to off. As noted above, the control can be direct or via an intermediary device, such as a secondary controller.

Metering

For accounting and regulatory purposes, the game controller **50** can be configured to update and maintain a variety of hard and soft meters on the EGM. The hard and soft meters can be affected by transactions involving virtual ticket vouchers. A hard meter can be an electro-mechanical device, like an odometer, with a display that advances to display a quantity. Usually, a hard meter is not resettable. Government regulations, which can vary from jurisdiction to jurisdiction, often require hard meters to be read on a regular basis, such as monthly. Examples of hard meters **84** can include coins-in **84***a*, coins-out **84***b*, coins-dropped **84***c*, jackpots-paid **84***d* and cancelled credit meter **84***e*. Other hard meters can be implemented and these are provided for the purposes of illustration only.

The game controller **50** can be configured to update the coins-in meter **84***a* in response to value-in transactions. For example, the coins-in meter **84***a* can accumulate all value-in transaction on the EGM **2**, such as from coin, bills, credit, token, paper token, printed ticket vouchers and virtual ticket voucher transactions. Thus, when a virtual ticket voucher is accepted on the EGM **2**, the coins-in meter **84***a* can be updated by some amount depending on the value of the virtual ticket voucher. Devices, such as but not limited to the wireless interface **18**, the bill validator/voucher acceptor **22** and a coin acceptor (not shown) can be used in performing a value-in transaction. In addition, via the network interface **56**, the game controller **50** can be configured to receive a transfer of value, such as credits, to the EGM **2**, from a remote device such as a bonusing server.

The game controller **50** can be configured to update the coins-out meter **84***b* in response to value-out transactions for the player. The coins-out meter **84***b* can be configured accumulate all value-out transactions from the EGM **2**, such as from outgoing coin, bills, token, credit, paper token, hopper ticket, printed ticket voucher and virtual ticket voucher transactions, paid out for a) awards and b) credits from awards that are wagered. Thus, when a virtual ticket voucher is issued from the EGM **2**, the coins-out meter **84***b* can be updated by some amount depending on the value of the virtual ticket voucher. Devices, such as but not limited to a coin-hopper (not shown), wireless interface **18** and printer **38** can generate the value-out transactions. The coins-out meter **84***b* may include credits that are accumulated on the jackpots-paid meter **84***d*.

The game controller **50** can be configured to update the coins-dropped meter **84***b* in response to value-out transactions for the casino. The coins-dropped meter **84***d* can accumulate 1) all coins and tokens that have been diverted into a drop bucket and 2) bills, paper tokens, printed ticket vouchers and virtual ticket vouchers accepted by the EGM **2**. Thus, coins-dropped meter **84***d* can be advanced when a virtual ticket voucher is accepted at the EGM **2**.

The jackpots-paid meter **84***d* can reflect any single event award that is not paid out by the EGM **2**. For example, depending on the amount of the jackpot, the EGM **2** may not be configured to dispense coins, issue a printed ticket voucher or issue a virtual ticket voucher above a certain value. In this situation, the payment of the jackpot amount can be handled by some other means, such as check from the casino. The jackpots-paid meter **84***d* may also include credits accumulated on the canceled credit meter. The canceled credit meter **84***e* can accumulate credits paid by means other than payouts from the devices on the EGM **2**, such as the hopper, printer, bill hopper, wireless interface or jackpot payouts if the device has such credit provisions.

The game controller **50** can be configured to maintain a number of soft meters. The soft meters can be electronic equivalents to the hard meters where data is stored in a digital format. The soft meters can be designed to be maintained at all times even when the EGM **2** is not supplied with power. One type of memory that can be used for storing soft meter data is a non-volatile memory, such as a battery backed RAM. It may be possible to reset the soft meters. For instance, the non-volatile memory storing the soft meter data can be cleared to reset the soft meters. However, before it is implemented, this process may require approval from a gaming regulator. Further, the EGM **2** can be designed such that an error condition on the EGM **2**, such as a power failure, doesn't cause the soft meters stored in non-volatile memory to be erased.

The EGM **2** can be configured to maintain soft meters that duplicate all or a portion of the quantities accumulated by the hard meters **84**. For instance, the game controller **50** can maintain a soft coin-in meter **62**. When duplicate values are accumulated on the soft and hard meters, the values accumulated over a particular time period on each type of meter should match. As described above, the soft meters that duplicate of the hard meters can be affected when virtual ticket vouchers are redeemed for credit on the EGM **2** or when virtual ticket vouchers are issued. For instance, the coin-in soft meter **62** and coins-dropped soft meter (not shown) can be updated in response to the successful redemption of a virtual ticket voucher. As another example, the coin-out soft meter (not shown) can be updated in response to a successful acceptance of virtual ticket voucher.

The game controller **50** can include an operator mode **58** where values of the soft meters can be read. The operator mode **58** includes the software logic that allows values of the soft meters to be gathered and then output. For instance, in operator mode, the game controller **50** can display the values of various soft meters to the main display. In some embodiments, the game controller **58** can be configured to periodically send values of the soft meters to a remote device, such as accounting server **70**. In another embodiment, the soft meter values can be displayed via a secondary device. For instance, a player tracking unit with a display and a smart interface board (SMIB), coupled to the game controller **50** can be configured to retrieve soft meter data from the game controller **50** and display it to the player tracking display. As another example, a SMIB coupled to the game controller **50** can be used to store and report soft meter values to a remote device.

The EGM **2** can accumulate other quantities in the soft meters that are not accumulated by the hard meters **84**. For instance, in one embodiment, the game controller **50** can maintain a voucher-in soft meter **64**. The voucher-in soft meter **64** can record a total number of validated printed ticket vouchers and validated virtual ticket vouchers redeemed the EGM **2**. Thus, the voucher-in soft meter **64** can be incremented by 1 each time a printed or virtual ticket voucher is redeemed. The voucher-out soft meter **66** can record a total number of printed ticket vouchers and virtual ticket vouchers issued from the EGM **2**. Thus, voucher-out soft meter **66** can be incremented by 1 each time a printed ticket voucher or a virtual ticket voucher is issued from the EGM **2**.

As another example, the game controller **50** can maintain a virtual ticket voucher-in soft meter **80** and a virtual ticket voucher-out soft meter **82**. The virtual ticket voucher out meter can be advanced by 1 each time a virtual ticket voucher is issued from the EGM **2**. The virtual ticket in meter can be advanced by 1 each time virtual ticket voucher is accepted by the EGM **2**. Other soft meters (not shown) can include a total value of virtual ticket vouchers issued, a total value of virtual ticket vouchers and printed ticket vouchers issued, a total value of virtual ticket vouchers successfully redeemed and a total value of the virtual ticket vouchers and a printed ticket vouchers successfully redeemed. Thus, as virtual ticket vouchers are successfully redeemed and virtual ticket vouchers are successfully issued, these four soft meters can be incremented depending on values associated with each of the virtual ticket vouchers issued or redeemed. The game controller **50** can also report soft meter values including each time a soft meter is incremented to a remote device for cross validation accounting purposes.

Dispute Resolution

At certain times, a player can dispute a transaction that has occurred on an EGM. For instance, a player can dispute that the EGM **2** issued a virtual ticket voucher that didn't accurately reflect the credits that were on the EGM **2** at the time the virtual ticket voucher was issued. In another embodiment, the player can dispute that the credits associated with a virtual ticket voucher accepted at the EGM **2** were not properly credited to the EGM. In one embodiment, to allow for disputes involving virtual ticket vouchers, an operator activated dispute resolution mode can be provided on the game controller.

In one embodiment, to help with dispute resolution, the game controller **50** can maintain a virtual ticket voucher received stack **60** and a virtual ticket voucher issued stack **61**. The virtual ticket voucher received stack **60** can include an electronic log of information associated with virtual ticket vouchers, such as time received, amount associated with the voucher, virtual ticket voucher number, when the virtual ticket voucher was issued, etc. In addition, the virtual ticket voucher received stack **60** can include images of virtual ticket vouchers redeemed and validated on the EGM **2**. As described above, in one embodiment, when a virtual ticket voucher is received, the game controller **50** can be configured to render an image of the received voucher. Thus, the image that is rendered can also be saved to the virtual ticket stack **60**. The virtual ticket voucher images can be saved with the time that they are received.

When placed in dispute resolution mode, the game controller **50** can be configured to display one or more of the saved virtual ticket voucher images at a time to a display, such as a main display on the EGM **2**. In one embodiment, a virtual ticket voucher image is saved when the virtual ticket voucher is accepted. In another embodiment, an image of the virtual ticket voucher can be rendered on the fly based upon virtual ticket voucher information saved to an electronic log, such as a ticket format, ticket number, ticket amount, etc. The dispute resolution mode can provide an interface that allows the operator to scroll through the virtual ticket voucher received stack **60**, such as in the order that the virtual ticket vouchers were received. In another embodiment, the dispute resolution mode can be configured to display virtual ticket voucher information, such as the amounts associated with each virtual ticket voucher received, in a non-image format. A benefit of displaying the information in an image format is that the customer may recognize the image of the voucher which can aid the dispute resolution process.

In another embodiment, data used to render a virtual ticket voucher can be saved. For example, if a standard format is used to render the virtual ticket received vouchers, the saved data may be the unique data associated with each virtual ticket voucher, such as an amount, ticket number, etc. As described above, a standard format to render the "virtual ticket vouchers received" can be selected so that it matches the format of printed ticket vouchers that are received. Thus, in the display resolution mode, the game controller **50** can be configured to render one or more virtual ticket vouchers in the "virtual ticket voucher received stack" **60** on the fly using the code for rendering the images of the virtual ticket vouchers and the virtual ticket voucher data stored in stack **60**.

As described above, the format of the data associated with the virtual ticket vouchers and printed ticket vouchers can be the same. An advantage of using the same format is that the virtual ticket vouchers can be compatible with an existing cashless system providing redemption and issuance of printed ticket vouchers. The difference being that the electronic data for the virtual ticket vouchers remains in electronic form while the electronic data for the printed ticket vouchers is sent to a printer and added to a printed ticket. In the case of the received ticket vouchers, the data for the virtual ticket voucher is received electronically while printed ticket voucher data is read by some device (for instance, a bar-code scanner can read a bar code printed on the ticket, which can be used to reference ticket information stored a remote server). After data is read from the printed ticket voucher and the printed ticket voucher is redeemed, the received printed ticket voucher can stored to a bill voucher/stack, such as **54**. Typically, the bill/voucher stack **54** is in a cash box secured within a main cabinet of the EGM **2**.

In one embodiment, the game controller **50** can maintain a ticket voucher received stack, which includes ticket voucher data for ticket vouchers received in a virtual ticket format or received in a printed ticket format. The time at which each of the tickets is received can be stored in the stack so that the ticket voucher data can be retrieved in a time sequential order. In dispute resolution mode, the ticket voucher data for the printed ticket vouchers can be retrieved and rendered in the same way that virtual ticket voucher data is retrieved and rendered. The virtual ticket vouchers and the printed ticket vouchers can be rendered slightly differently, such as different color, to allow the format in which each type of ticket vouchers was received to be distinguished.

The issued virtual ticket voucher issued stack **61** can be maintained and accessed in the manner similar to the virtual ticket voucher issued stack **60**. For instance, images of issued virtual ticket vouchers that have been rendered can be saved to memory or the virtual ticket voucher data of the issued vouchers can be saved to memory and later used to render images of virtual ticket vouchers that can be output to a display device. In one embodiment, an electronic ticket voucher issued stack can be maintained. The electronic ticket voucher issued stack can include ticket voucher data for ticket vouchers issued in a printed ticket voucher format or a virtual ticket voucher format. The game controller **50** can be configured to retrieve the ticket voucher data from the stack and render images of virtual ticket vouchers or printed ticket vouchers using the data. The rendered ticket voucher images can be output to a display device.

Retrofit

Next, with respect to FIGS. **3**A and **3**B, a number of retrofit embodiments are discussed. In the retrofit embodiments, a retrofit device can be coupled to an existing EGM **2** that doesn't provide virtual ticket voucher functionality to

allow it to perform virtual ticket functions. In one embodiment, as described with respect to FIG. **3**A, the retrofit device can be configured so that software on the game controller, a ticket printer and/or a bill/ticket acceptor doesn't need to be modified to allow virtual ticket voucher functionality to be provided. In this embodiment, the game controller, ticket printer and bill/ticket acceptor can communicate with one another as if the retrofit device is not present. Essentially, the retrofit device is invisible the devices in that each of the devices is unaware of the functions that the retrofit device is performing.

In another embodiment, as described with respect to FIG. **3**B, a device on the EGM, such as a card reader, player tracking unit, ticket printer and/or bill/ticket acceptor, can be replaced with a substitute device that performs all or a portion of the virtual ticket vouchers functions. As an example, an existing printer that generates only printed ticket vouchers can be replaced with a printer that is configured to print ticket vouchers or issue virtual ticket vouchers. In another example, an existing bill/ticket acceptor can be replaced with a new bill/ticket acceptor that is configured to receive bills, printed ticket vouchers and virtual ticket vouchers.

As described above, a printer and/or bill validator can be configured with virtual ticket functions where the game controller is aware of the functionality. For instance, the game controller can be configured to command the printer to print a virtual ticket voucher to issue a virtual ticket voucher and expect an acknowledgement that the virtual ticket voucher has been issued from the printer. For a retrofit of an EGM where the game controller was designed without virtual ticket voucher functionality, the game controller may not have the capability to issue commands associated with virtual ticket vouchers or receive and parse acknowledgements associated with virtual ticket vouchers from a secondary device, such as a printer with virtual ticket voucher functionality. Thus, as is described in more detail below, the interactions between a retrofit device and a game controller, such as a retrofit printer with virtual ticket voucher functionality, can be different than in the instance of a printer with virtual ticket voucher functionality where the game controller is configured to utilize the virtual ticket functionality.

FIG. **3**A is a block diagram of an electronic gaming machine **2** including a retrofit device **52** for providing virtual ticket-in and ticket-out services. The retrofit device **52** can be configured and installed such that the game controller **50**, the printer **38** and the bill validator/acceptor do not require software modifications. The retrofit device **52** can be configured to perform virtual voucher processing **74** and provide the wireless interface control **72** as described with above respect to FIGS. **1** and **2**.

The retrofit device **52** can be configured to accept virtual ticket vouchers, issue virtual ticket vouchers or combinations thereof. Further, it can be configured to maintain soft meters, such as the v-ticket-in meter **80** and the v-ticket-out meter **82** and other meters as described above. Thus, the retrofit device **52** can include a processor and memory for updating the software meters and a non-volatile memory for storing the soft meter values. The retrofit device **52** can be configured to report soft meter values to a remote device via a wired or wire communication interface associated with the retrofit device **52** or available on the EGM **2**. Like the soft meters maintained in the game controller **50**, the soft meters maintained by the retrofit device can be configured to be generally non-resettable. However, the retrofit device **52** can be configured to reset the soft meters after approval is received from a gaming regulator. For instance, the reset of the soft meters on the retrofit device **52** can be performed in the presence of a gaming regulator.

The retrofit device **52** can be configured to update a set of hard meters **86** separate from the hard meters **84** maintained by the game controller **50**. For instance, the retrofit device **52** can be configured to update hard meter equivalents for one or more of the soft meters it maintains. In particular components, the hard meters can be integrated into the retrofit device **52**. Like the embodiment described in FIG. **2**, the retrofit device **52** can be configured to maintain a v-ticket voucher received stack **60** and a v-ticket voucher issued stack **61**.

Further, as is described in more detail below, the retrofit device **52** can be configured with device emulation **77**. The device emulation **77** can allow the retrofit device **52** to respond to game controller **50** as if it were another device on the EGM **2**, such as the printer **38** and/or the bill validator **22**. The user interface provided on the retrofit device can be different from either of the devices it is emulating. For instance, retrofit device that emulates a printer **38** and/or the bill validator may not include a slot for issuing ticket voucher or a slot for accepting ticket vouchers. Further, the retrofit device can include additional interface devices, such as a display, touch screen, graphical user interface, engraved or printed instructions or buttons, that aren't found on a typical bill validator or printer.

Next some details of the operation of the retrofit device are described. The E-cash in button and the E-cash out button **26** can be located somewhere on the player interface. For instance, an existing player input panel can be replaced with a retrofit player input panel that includes the E-cash in button **24** and the E-cash out button **26**. In other embodiments, existing buttons on a player interface panel can be reprogrammed to provide these functions. In addition, the retrofit player input panel can include the wireless interface **18** and an expose a portion of the status indicator **19**.

When the retrofit device **52** detects the E-cash in button **24** has been actuated, it can place itself in a state where it is ready to receive information associated with a virtual ticket voucher. For instance, it can activate wireless interface **18** so that it is ready to receive virtual ticket information from a portable electronic device and change a state of the status indicator **19** to indicate it is ready. If the status indicator includes a display than a message can be output to the display indicating the retrofit device is ready to receive virtual ticket voucher information. If the wireless interface is only left active for some time period, then the retrofit device **52** can initiate a countdown as was described above with respect to the EGM **2** to determine when to deactivate the wireless interface.

After the retrofit device **52** receives or recognizes the virtual ticket voucher information, the retrofit device, via the device emulation **77**, can respond to the game controller **50** as if it were bill validator **22** that has accepted a printed ticket voucher. Towards this end, the retrofit device communications can be interposed on the communication link between the bill validator **22** and the game controller **50**. Interposing the retrofit device on this communication link can involve inserting an adapter at one of the communication endpoints (i.e., at the bill validator or the game controller end) that routes the communications between the bill validator **22** and the game controller through the retrofit device.

When the retrofit device is activated to receive a virtual ticket voucher, such as after an actuation of the E-cash in button **24** is detected, it can notify the game controller in the

same way as the bill validator **22** notifies the game controller **50** when a printed ticket has been detected as being inserted. After the virtual ticket voucher information is received, the retrofit device **52** can notify the game controller **50** on the bill validator communication link in the same manner as if information has been read from a printed ticket voucher. During this process, commands/acknowledgements sent from the game controller **50** to the bill validator **22** can be blocked from reaching the bill validator and instead can be processed and responded to by the retrofit device **52**. If the virtual ticket voucher is validated, the game controller **50** will update its soft meters and hard meters as if a printed ticket voucher of some amount had been received by the bill validator. As described above, in a non-retrofit embodiment, the game controller **50** can be configured to update hard and/or soft meters associated with virtual ticket vouchers, such as a number of virtual ticket vouchers accepted and a value of the virtual ticket vouchers accepted.

If the virtual ticket voucher information is not validated and the game controller **50** sends a command to the bill acceptor **22** to reject a printed ticket (send it back out the ticket slot), then, the retrofit device **52** can receive the command and respond to the game controller **50** as if it has rejected a printed ticket. In one embodiment, the retrofit device **52** may have access to an interface, such as a display, that allows it to display a message that indicates the virtual ticket voucher is invalid. In another embodiment, the retrofit device **52** can be configured to change a state of the status indicator **19** to indicate the rejection of virtual ticket voucher. For instance, if so equipped, a light associated with the status indicator can flash red when the virtual ticket voucher is not accepted. In a bill validator, a physical ejection of the printed ticket voucher is used to indicate the printed ticket voucher has been ejected. In addition or alternatively, a rejection message or rejection indication can sent to a portable electronic device and the message or some indicator that the ticket voucher has been rejected can be output to the portable electronic device.

If the retrofit device **52** detects that the bill validator is initiating a transaction, such as when it has received a printed ticket voucher or a bill, it can allow communications between the game controller **50** and bill validator **22** to pass through. If the retrofit device **52** detects an actuation of the E-cash in button **24** before the transaction between the bill validator **22** and the game controller **50** is completed, the retrofit device **52** can be configured to ignore and not respond to the signal or the retrofit device **52** can be configured to wait to respond to the signal until it determines the transaction between the bill validator **22** and the game controller **50** is completed. For instance, a state of the wireless interface **18** and it associated status indicator **19** may not be changed until the transaction between the game controller **50** and the bill validator is completed. This sequence can occur if a user wishes to deposit credits via a printed ticket voucher and then deposit credits via a virtual ticket voucher.

Next, cash out transactions are described using the retrofit device **52**. The E-cash out button **26** can be coupled to the retrofit device **52** and the game controller **50** via the communication path for the cash out button **30**. Thus, when either the E-cash out button **26** or the cash out button **30** is actuated, the game controller can receive and process the signal as if the cash out button **30** has been actuated, i.e., the game controller **50** is not configured to distinguish that the signal was generated from the E-cash out button **26** or the cash out button **30**. Then, when a signal is received from either button, the game controller **50** can respond in the same manner as if the cash out button has been activated. The game controller **50** can contact the validation server to receive ticket voucher information, such as a unique validation number for the ticket voucher that is to be issued. Then, the game controller **50** can generate and send instructions to the printer **38** to print a ticket voucher including the unique validation number.

The retrofit device **52** can be interposed on the communication path between the printer **38** and the game controller **50**, such as in the manner described with respect to the bill validator. The retrofit device can be embodied physically as a separate device or logically within an existing device. The retrofit device **52** can receive the print instructions, activate the wireless interface **18** and change the status indicator **19**. If a portable electronic device is detected and the virtual ticket voucher is transferred to the portable electronic device within some time period, the retrofit device **52** can respond to the game controller **50** as if it were the printer **38** and it had issued a printed ticket. If the retrofit device **52** doesn't issue the virtual ticket voucher within the time period, it can change the status of the wireless interface **18** and the status indicator **19** and release the initial print command to the printer **38** so that transaction is now processed as printed ticket. It can then allow subsequent communications between the printer **38** and the game controller **50** to pass through the retrofit device **52** so that the printed ticket voucher transaction can be completed.

When the retrofit device **52** receives a print voucher command from the game controller **50** and an actuation of the E-cash out button hasn't been detected, then the retrofit device **52** can be configured to allow communications between the game controller **50** and the printer **38** to pass through the retrofit device **52** until the printed ticket transaction is complete. In this example, the print voucher command can be initiated when a signal from an actuation of a cash-out button on the EGM **2** is detected. If the retrofit device detects an actuation of the E-cash out button **26** after the cash-out transaction has been initiated via the cash-out button, then the retrofit device **52** can be configured to ignore the E-cash out button because a printed voucher transaction has already been initiated. In alternate embodiments, the printer **38** and/or the bill validator can be removed from the EGM **2**. In these embodiments, the retrofit device **52** can be configured to emulate the printer **38** and/or the bill validator to issue and/or receive only virtual ticket vouchers.

In one embodiment, the retrofit device **52** can be configured to report its virtual ticket voucher activity to a remote device, such as the validation server **68** or the accounting server **70**. For instance, the retrofit device **68** can be configured to communicate which of the printed ticket voucher transactions initiated by the game controller **50** were actually completed as virtual ticket voucher transactions. Similarly, the retrofit device **52** can be configured to communicate to a remote device which ones of the redeemed ticket vouchers reported as being received in the bill validator **22** by the game controller **50** were actually virtual ticket vouchers. Similarly, if the retrofit device **52** is configured to accept virtual currency, such as via an e-wallet application, the retrofit device **52** can be configured to communicate to a remote device when virtual currency is accepted. This information would be useful for the soft count process since the virtual ticket vouchers or the virtual currency won't be in the cash box when the bills and printed tickets in the cash box are counted.

The retrofit device **52** can communicate with a remote device via the game controller **50** and the network interface

56 if the game controller 50 is configured to allow pass through communications from a device, such as 52. In another example, the retrofit device can be directly coupled to the network interface 56 if the network interface 56 allows for such communications and initiate communications through the network interface 56. In yet another embodiment, the retrofit device 52 can include its own communication interface, such as wireless communication interface, that allows it communicate with server 68 or 70 via some other communication pathway.

In FIG. 3A, the retrofit device 52 is shown as a separate device. In other embodiments, the functions of the retrofit device can be integrated into an existing device on the EGM 2. For instance, a card reader can be configured to perform the functions of the retrofit device 52. The card reader retrofit device can be configured perform communications in the manner described for the retrofit device 52. For instance, it can be interposed between the communication connections between the printer and the game controller and/or between the bill validator and the game controller. In addition, it can be configured to perform card reader functions. In particular embodiments, a wireless interface 18 and status indicator 19 can be provided near the card reader slot that allows access to the interior of the card reader such that the status indicator is visible to the player. In addition, an E-cash out button, such as 26 and an E-cash in button 24, can be provided near the card reader slot. The interface on the card reader including the status indicator, E-cash-in and E-cash out buttons and wireless interface can be arranged such the card reader can fit in an existing card reader slot associated with the EGM 2.

In another embodiment, the functions of the retrofit device can be incorporated into a player tracking unit. If desired, the wireless interface 18, the status indicator, the E-cash in button and/or the E-cash out button can be integrated into the player tracking interface. The cabinet of the EGM 2 includes an aperture that can be filled by the player tracking interface so that the features of the player tracking interface are accessible to a player. This feature can allow the player tracking unit with virtual ticket voucher in and virtual ticket voucher out capabilities to replace and fit in the space occupied by an existing player tracking unit without these capabilities.

As another example, the printer 38 or the bill validator 22 can be configured with the retrofit device functions. If the printer 38 is incorporated with all of the retrofit device functions, then the printer 38 can be configured to determine whether a ticket voucher is to be issued as virtual ticket voucher or a printed ticket voucher but respond to the game controller 50 as if all of the transactions were printed ticket vouchers. Thus, the existing connection between the game controller 50 and printer 38 may not have to be modified. However, to perform virtual ticket-in functions, the printer 38 can be interposed between the communication channel between the game controller 50 and the bill validator. As described above for the retrofit device, the printer 38 can be configured to block certain communications to the bill validator 22 and in some instances respond to the gaming controller 50 as if it were a bill validator.

In yet another example, if the bill validator 22 is incorporated with all of the retrofit device functions, then the bill validator can be configured to determine whether an accepted ticket voucher is a virtual ticket voucher or a printed ticket voucher but respond to the game controller 50 as if all of the transactions were printed ticket vouchers. The existing connection between the game controller 50 and bill validator may not have to be modified. However, to perform virtual ticket out functions, the bill validator can be interposed between the communication channel between the game controller 50 and the printer 38. As described above for the retrofit device, the bill validator can be configured to block certain communications to the printer 22 and in some instances respond to the gaming controller 50 as if it were a printer.

In yet other embodiments, the E-cash in button 24 and/or the E-cash out button 26 functions can be embodied on a portable electronic device. As an example, the EGM 2 can be configured to establish communications with the portable electronic device. After communications are established with the portable electronic device, an application executing on the portable electronic device can generate a touch screen button to initiate an E-cash in transaction or an E-cash out transaction. When portable electronic device detects one of the buttons has been selected, a message requesting the EGM 2 to initiate an E-cash in transaction or an E-cash out transaction can be sent to the EGM 2. The message can be received by the game controller or another device with a secondary controller, such as a player tracking unit, bill validator, printer or card reader, configured to respond to the message. In response to receiving the message and E-cash in transaction and/or an E-cash out transaction can be generated.

Thus, in particular embodiments, the EGM 2 may or may not include the E-cash in button 24 or the E-cash out button 26. In addition, the EGM 2 can include E-cash in button 24 and/or an E-cash out button 26 and can also be configured to receive a message from a portable electronic device requesting an E-cash in transaction or an E-cash out transaction. In this embodiment, the EGM 2 can initiate the E-cash in transaction in response to an actuation of the E-cash in button 24 or in response to receiving a message from a portable electronic device or some other remote device requesting the E-cash in transaction. Similarly, the EGM 2 can initiate the E-cash out transaction in response to an actuation of the E-cash out button 26 or in response to receiving a message from a portable electronic device or some other remote device requesting the E-cash out transaction.

In one embodiment, the remote device requesting the E-cash in or E-cash out transaction can be a remote server. The remote server can open up a "service window" on the EGM 2 that includes a touch screen button to initiate an E-cash in transaction or an E-cash out transaction. The remote server can receive an indication that the E-cash in button or the E-cash out button has been selected. In response, the remote server can send a message to the EGM 2 requesting an E-cash in transaction or an E-cash out transaction. In response, the gaming controller or a secondary controller on the EGM 2 that receives the request message can initiate the E-cash in transaction or the E-cash out transaction involving a portable electronic device.

Next embodiments are described where some of the retrofit device functions are split between secondary devices on an EGM, such as a bill validator and a printer. FIG. 3B is a block diagram of an electronic gaming machine including a bill acceptor and a printer for providing virtual ticket-in and ticket-out services. In FIG. 3B, although the virtual ticket functions are shown split between a bill validator and printer other combinations are possible. For instance, the virtual ticket functions can be split between a card reader and a player tracking unit or between a card reader and a printer. In addition, the functions allocated to each device can be different. For instance, in FIG. 3B, the printer 38 is described as handling virtual ticket out functions while the

bill validator is shown as handling virtual ticket in functions. In alternate embodiments, these functions can be reversed between the devices. Thus, the example described with respect to FIG. **3**B is provided for illustrated purposes and is not meant to be limiting.

In FIG. **3**B, the bill validator **108** is configured to handle virtual ticket in functions. Thus, it can be configured to perform the processing associated with receiving virtual ticket vouchers. The processing can include maintaining and/or updating hard and soft meters. If the cash box includes a memory for storing records for received virtual ticket vouchers, then the bill validator **108** can be configured to update the memory with virtual ticket voucher information that is received.

In FIG. **3**B, the bill validator **108** is configured as a retrofit device. Thus, the bill validator can be configured to report virtual ticket voucher transactions to the game controller **50** as a printed ticket voucher transaction. In one embodiment, the bill validator **108** can include communication capabilities, such as output interface **104** that allows the device to communicate virtual ticket voucher information to a remote device, such as server **68**. In addition, the bill validator **108** can include an operator mode **105** that allows the bill validator to be interrogated for information, such as for its soft meter values associated with the virtual ticket vouchers. In one embodiment, via the output interface **104**, this information can be displayed to a remote device, such as portable electronic device carried by an operator or to a display device coupled to the EGM **2**. In a non-retrofit embodiment, this information can be reported to the game controller **50** and maintained as soft meters by the game controller **50**. Thus, the operator mode **105** for displaying soft meter values may not be needed with a non-retrofit device but could be included as a back-up to the game controller **50** in some embodiments.

In one embodiment, the bill validator **108** can include one or more of a wireless interface **106**, a status indicator (not shown) and the E-cash in button **24**, built into the face of the bill validator including the slot for receiving bills. Alternatively, the bill validator **108** can be configured to receive a message from a portable electronic device or a remote server requesting an E-cash in transaction and may not include an E-cash in button **24**. In this embodiment, the bill validator **108** can establish a communication session with the portable electronic device and/or a remote server and then receive the message requesting the E-cash in transaction from one of the devices.

The bill validator **108** can be configured to activate the wireless interface **106** and process information received via the wireless interface. Further, it can be configured to control the status indicator to indicate changes in state of the wireless interface **106**, such as if the wireless interface is turned on or off. In a non-retrofit embodiment, when the E-cash in button **24** is included on the bill validator and it is actuated, the bill validator **108** can be configured to report the initiation of virtual ticket in transaction to the game controller rather than reporting it as a printed ticket-in transaction.

In FIG. **3**B, the printer **102** is configured to handle virtual ticket out functions. Thus, it can be configured to perform the processing associated with issuing virtual ticket vouchers. The processing can include maintaining and/or updating hard and soft meters associated with the virtual ticket in functions. In FIG. **3**B, the printer **102** is configured as a retrofit device. Thus, the printer **102** can be configured to report virtual ticket voucher transactions to the game controller **50** as printed ticket voucher transactions. However, the printer **102** can include communication capabilities, such as output interface **92** that allows the device to communicate virtual ticket voucher information to a remote device, such as server **68**.

The printer **102** can include an operator mode **91** that allows the printer **102** to be interrogated for information, such as for its soft meter values associated with the virtual ticket vouchers that have been issued. As described above, the printer can include a non-volatile memory for maintaining the soft meters, such as battery-backed RAM, Flash or NV-RAM technologies. In one embodiment, via the output interface **92**, this information can be displayed to a remote device, such as portable electronic device carried by an operator or to a display device coupled to the EGM **2**. In a non-retrofit embodiment, this information can be reported to the game controller **50** and maintained as soft meters by the game controller **50**. Thus, the operator mode **91** for displaying soft meter values may not be needed with a non-retrofit printer device but could be included as a back-up to the game controller **50**.

In yet another embodiment, the printer **102** can include one or more of a wireless interface **91**, a status indicator (not shown) and the E-cash out button **26**, built into the face of the printer **102** including the slot for ejecting tickets that forms a portion of the EGM exterior. The printer can be configured to activate the wireless interface **90** and process information received via the wireless interface. Further, it can be configured to control the status indicator to indicate changes in state of the wireless interface **90**, such as if the wireless interface is turned on or off. As described above, if the E-cash out button is included in the printer interface then the printer can be coupled to the communication channel associated with the cash out button, such that a cash-out signal is sent to the controller **50**. The printer **102** can be configured to generate this signal. In response, the controller **50** can initiate a cash-out sequence where it is responding as if a printed ticket voucher is being generated. In non-retrofit embodiments where the controller **50** includes virtual ticket out functionality, the printer **102** can notify the game controller **50** that the E-cash out button **26** has been actuated and in response the game controller **50** can initiate and E-cash out transaction.

In the example described above, the bill validator **108** and the printer **102** each include separate wireless interfaces. If a NFC compatible interface was used, then as part of a virtual ticket in transaction, a portable electronic device might need to be placed near or in contact with the bill validator interface. In addition, as part of a virtual ticket out transaction, the portable electronic device might need to be placed near or in contact with the printer interface. Having to place the portable electronic device in different locations for each type of transaction reduces the required interfaces, thus, in one embodiment, two devices, such as a printer and a bill validator with virtual ticket out and ticket in capabilities can share a wireless interface and status indicator. However, it may be more intuitive for a user to place their device near a cash-in device for a cash-in transaction and near a cash-out device for a cash-out transaction. Thus, in some embodiments, separate wireless interfaces may be maintained.

In this embodiment, provisions may need to be made in regards to sharing control of the interface and status indicator. For instance, the wireless interface can communicate its status, i.e., whether it is in use or not. The bill validator and printer can be configured to respond to the case where the interface is being utilized by the other device and it wishes to initiate a transaction. For instance, after a virtual

ticket out transaction is initiated on the printer **102**, the printer might start controlling the shared interface. If the E-cash in button was pressed, the bill validator can attempt to control the interface but receive an indication from the wireless interface that it is busy. In response to the bill validator receiving an indication that wireless interface is busy, the bill validator can be configured to ignore the virtual ticket in request. In another example, it can be configured to hold the transaction in abeyance and continue to check the status of the wireless interface. When it detects the status of the wireless interface is inactive (i.e., the printer is not controlling the interface), it can initiate the virtual ticket in transaction on the wireless interface.

In other embodiments, only one of the devices and its associated functions can be included. For instance, an EGM can be configured with a retrofit printer device that can issue virtual ticket vouchers or printed ticket vouchers but is only able to accept printed ticket vouchers and thus, doesn't include a bill validator with the functions described above. In another example, the EGM can be configured with a retrofit bill validator that can receive virtual ticket vouchers or printed ticket vouchers but is only able to issue printed ticket vouchers and thus, doesn't include a printer with the functions described above.

Virtual Ticket Management

With respect to the FIGS. **4**A-**4**C, the management of virtual tickets on a portable electronic device is described. The management can include interactions with a remote server that allow virtual tickets stored on the portable electronic device to be redeemed or new virtual ticket vouchers to be created as well as other virtual ticket services to be provided. FIG. **4**A shows a block diagram of a system providing remote creation, validation and redemption of virtual tickets in accordance with the described embodiments. In one embodiment, the system includes a server **200** configured to communicate with remote devices, such as portable electronic device **202**, via a WAN **225**, such as the Internet.

The portable electronic device **202** can include a processor, a memory and a network interface **220**. In addition, the portable electronic device can include a number of I/O interfaces **222**. The I/O interfaces **222** can include visual and audio interfaces, such as displays, speakers, cameras, microphones, a touchscreen and an audio jack. The I/O interfaces **222** allow a user to interact with the portable electronic device including receiving video images and audio content associated with different applications executed on the portable electronic device. Further, the I/O interfaces **222** can include wired and/or wireless interfaces that allow the portable electronic device to communicate with other devices directly or via a network connection. Further, the portable electronic device **202** can include various a GPS receivers and various sensors, such as an accelerometer. The GPS receiver can be used for applications requiring a location. The accelerometer can be used to detect a movement of the device, which in some instances can used to generate control commands. As an example, the portable electronic device **202** can be a smartphone or a tablet computer, such as an iPhone™ or an iPad™ by Apple™.

As described above, the portable electronic device **202** can be used with virtual ticket vouchers. In particular, a virtual ticket voucher stored on the portable electronic device **202** can be transmitted to an EGM and validated to allow credit associated with the virtual ticket voucher to be deposited on the EGM. Also, a virtual ticket voucher generated by an EGM can be transmitted to the portable electronic device **202** to allow cash or credits to be transferred from the EGM to the portable electronic device. The virtual ticket voucher received by the portable electronic device from the EGM can later be used for game play on other EGMs, can be redeemed for cash at a cashier station or at a redemption kiosk, or can be converted into a virtual cash form compatible with an E-Wallet application.

In one embodiment, the portable electronic device **202** can be configured to execute a voucher management application **218** for managing virtual ticket vouchers. The voucher management application **218** can be downloaded from a remote device, such as server **200**. A voucher management download application **215** on server **200** can be configured to download voucher management applications compatible with different operating systems, such as iOS™ by Apple™, Android™ by Google™, Windows 7 by Microsoft™ or QNX RTOS by RIM™. The different operating systems can be utilized by different types of portable electronic devices.

In other embodiments, the portable electronic device **202** can be implemented more simply. For instance, a smart card or an appropriately configured memory stick can be used to send virtual ticket vouchers to an EGM and receive virtual ticket vouchers from the EGM. For instance, a wired or wireless interface can be provided on the EGM to communicate with the memory stick. The EGM can detect the memory stick and display its contents related to virtual ticket vouchers to a display. On the display, such as a touch screen display, the user may be able to drag virtual ticket vouchers to a particular area associated with the EGM, such as a box rendered on the display, to redeem the vouchers and drag virtual ticket vouchers from an area associated with the EGM to an area associated with the memory stick to store the virtual ticket voucher to the memory stick.

The virtual ticket voucher management application can be configured to store virtual ticket voucher information **212** associated with unredeemed and redeemed virtual ticket vouchers. In one embodiment, the application **218** can be configured to manage account data associated with a loyalty program. Further, the application **218** can include voucher templates **214** that allow a user to customize the appearance of a virtual ticket voucher displayed on the portable electronic device **202**. For instance, as described above, a virtual ticket voucher can be rendered in the format of a printed ticket voucher where via the voucher templates **214**, the user can customize the rendered appearance of virtual ticket vouchers stored on the portable electronic device **202**. In one embodiment, the ticket customization templates can be downloaded from a remote host, such as web-site affiliated with a casino or a gaming machine manufacturer.

In addition, the application **218** can provide a voucher interface **216**. The voucher interface **216** can be configured to allow a user to organize, display and redeem their virtual ticket vouchers and manage loyalty program information. A few examples of an interface associated with the virtual ticket voucher management application are described with respect to FIGS. **4**B and **4**C. In one embodiment, the voucher management application can be configured to determine an expiration date associated with a virtual ticket voucher stored on the portable electronic device. When a virtual ticket voucher is near its expiration date, the interface **216** can be configured to send a notification message to the user, such as an alert message. An expiration policy for virtual ticket vouchers may vary from casino to casino. Thus, the application **218** can be configured to identify an establishment from which the virtual voucher was received and determine the expiration data for the virtual ticket voucher based upon the expiration policy associated with the

establishment. In some instance, the expiration policy associated with virtual ticket voucher can be included in the virtual ticket voucher information that is received when a virtual ticket voucher is transferred to the portable electronic device. Thus, the application **218** can be configured to use this information in determining whether a virtual ticket voucher is about to expire.

In other embodiments, the virtual ticket management application **218** can be configured to communicate with a remote device, such as server **200**, to receive other additional virtual ticket voucher services. For instance, server **200** can be configured to provide downloads including updates of the voucher management application **218** to remote devices, such as device **200**. In one embodiment, the server **200** can include logic **208** that allows a virtual ticket voucher to be issued and transmitted to a portable electronic device **202**. To perform this transaction, the server **200** can be configured to 1) contact a validation server that is utilized by one or more casino locations to receive unique voucher information, 2) construct a valid virtual ticket voucher, 3) confirm payment for the virtual ticket voucher, 4) transmit the virtual ticket voucher to the portable electronic device and 5) notify the validation server that the virtual ticket voucher has been issued. In addition, the server **200** can be configured to send device information associated with the portable electronic device **202**, such as unique device information. In one embodiment, as described above, the validation server may require the unique device information to validate the virtual ticket voucher.

A restriction with the virtual ticket voucher issued by server **200** can be that the virtual ticket voucher has to be redeemed at the casino for which is valid. As will be described in more detail as follows, the server **200** can be configured to redeem the virtual ticket vouchers issued at a gaming property, such as a casino. In one embodiment, the server **200** may not validate tickets issued from the server **200**. Another restriction can be the server **200** may not issue virtual tickets above a certain value, such as above $100 dollars.

Another type of virtual ticket voucher that can be purchased is a virtual ticket voucher redeemable for promotional credits. Promotional credits can be played on an EGM but can't be redeemed for cash. However, awards earned from wagers using the promotional credits can be redeemed for cash. As an example, the server **200** can be configured to allow a purchase $100 dollars worth of promotional credits for $50 dollars. This type of offer can offered in a group fashion, such as purchase $100 dollars worth of promotional credits for $50 if 50 people sign-up for the deal. The purchase of the promotional credits can be handled by the promotion application **204**. To allow redemption of promotional credits, the server **200** can be configured to contact a validation server at a gaming property to receive a unique validation number that allows the promotional credits to be redeemed at the gaming property.

The server **200** can provide incentives to purchase a virtual ticket voucher that can redeemed for cash at a casino. For instance, as described in the previous paragraph, if a cash value virtual ticket vouchers is purchase for a certain value, the server **200** can be configured to issue a second virtual ticket voucher for promotional credits. As other incentives, the server **200** can be configured to issue virtual ticket vouchers that can be redeemed for discounts for services at a casino property, such as a discount at restaurant, a discount at a spa, a discount at a gaming property store or a discount on lodging. The amount of incentives provided with a purchase of virtual ticket voucher can be related to the value of the virtual ticket voucher purchased. In one embodiment, to receive a virtual ticket voucher redeemable for an incentive, such as a discount for lodging, a user may have to provide identification information. When identification information is provided, the redemption of the virtual ticket voucher redeemable for an incentive may be limited to a particular person associated with the identification information. The server **200** can store a record of the identification information associated with each virtual ticket voucher.

In other embodiments, the server **200** can be configured to provide virtual ticket voucher redemption **206**. The server **200** can be configured to establish contact with a remote device, such as portable electronic device **202** and receive virtual ticket voucher information associated with a virtual ticket voucher stored on the portable electronic device that was transferred to the portable electronic device at a gaming property. After receiving the virtual ticket voucher information from the portable electronic device, the server **200** can be configured to contact a validation server **200** at the gaming property, transmit the virtual ticket voucher information and receive a confirmation in regards to whether the virtual ticket voucher is valid and hasn't been previously redeemed.

If the virtual ticket voucher is validated, then server **200** can be configured to provide the redemption value of the virtual ticket voucher to a user and notify a validation server that the virtual ticket voucher has been redeemed. For instance, the server **200** can be configured to mail a check for the value of the virtual ticket. In another embodiment, the server can be configured to make an electronic funds transfer to an account specified by a user, such as PayPal™ account, a regular bank account or some other account accessible to the user.

In another embodiment, the user can have an account on server **200** where virtual ticket vouchers can be stored. The account can be set up to automatically redeem and transfer funds associated with the redeemed virtual ticket vouchers to a user's bank account. For instance, the account can be set-up to perform this action automatically 30 days after a virtual ticket voucher has been issued. In another embodiment, a voucher management application executed on a user's mobile device or a home computer can be configured to carry out this process (e.g., contact the server **200**, request a redemption of a virtual ticket voucher and a transfer of funds to a user's bank account when the ticket is valid).

To encourage user's to redeem their virtual ticket vouchers at the gaming property where they were issued, limits can be set on when a virtual ticket voucher can be redeemed. For instance, on server **200**, a virtual ticket voucher may not redeemable until it is close to its expiration date, such as week from expiring. Thus, a user would have to wait unit the virtual ticket voucher was about to expire to redeem on-line or else travel to the gaming property where it was issued to have it redeemed. In another example, the server **200** may not be configured to redeem virtual ticket vouchers over a certain amount, such as over $100 dollars.

In one embodiment, rather than redeeming virtual ticket vouchers, the server **200** can be configured to provide an extension of the expiration date. Thus, if a virtual ticket voucher was about to expire, via a portable electronic device, the user can send the virtual ticket voucher information to the server **200** and request and expiration date extension. In response, the server **200** can contact a validation server at a gaming property and request an extension. If granted, the validation server can transmit the new expira-

tion date to the server **200** and then the server **200** can notify the user associated with the portable electronic device **202** of the new expiration date.

Next, a few details of a voucher management application executable on a portable electronic device, such as **202**, are discussed. FIGS. **4**B and **4**C show block diagrams of an application for managing virtual tickets on a portable electronic device. In particular, FIGS. **4**B and **4**C show examples of interface output data, **230** and **232**, associated with the voucher management application that can be output to the display of a portable electronic device.

In one embodiment, the voucher management application can be configured to display information associated with one or more virtual ticket vouchers. As previously described, the virtual ticket voucher information can be rendered in the format of printed ticket voucher. In one embodiment, the virtual ticket voucher can be rendered in a format that is consistent with the gaming property from which it was issued. In another embodiment, voucher management application can be configured with options, such as voucher format templates, that allow a user to customize the appearance of the virtual ticket vouchers rendered on the display of the portable electronic device. In some instances, all or a portion information can be transferred to a gaming device, such as an EGM. When virtual ticket voucher information is transferred to the EGM, the EGM can be configured to render an image of the virtual ticket voucher on one of its displays using the user-selected format parameters for the virtual ticket voucher.

If multiple virtual ticket vouchers are rendered on a display of the portable electronic device simultaneously, the size of each rendered voucher may be reduced and information associated with the rendered voucher may be difficult to see. Towards this end, the voucher management application can be configured to render information associated with rendered voucher, such as value amount, in a larger format than other information rendered in the image of the virtual ticket voucher. This data can be rendered separately from the image of the virtual ticket voucher, such as below the virtual ticket voucher. Further, the information can be rendered as plain text, such as in a spread sheet format, without image data. The voucher management application can include a feature that allows a user to select a format for displaying the data or can be configured to switch formats depending on the amount of data that needs to be displayed.

In one embodiment, a bar-code or other optically formatted image data (e.g., QR code) rendered in an image of a virtual ticket voucher can be used to redeem a virtual ticket voucher. For instance, at a cashier station a user can present their portable electronic device while it is displaying the bar-code. The cashier can scan the bar-code and the information can be sent to a remote server for validation purposes. If the virtual ticket voucher is valid, then the cashier can provide the value associated with the virtual ticket voucher to the person that presented the portable electronic device.

In a particular embodiment, the voucher management application can include print capabilities that allow an image of virtual ticket voucher to be printed out via a standard printer. In some instances, electronic gaming machines or other redemption devices can be configured to accept virtual ticket vouchers printed in this manner. A user may wish to print out a record of a previously redeemed ticket. For instance, the user can print out a ticket associated with a large payout as a souvenir. If desired, a water mark or some other indication can be added to a redeemed ticket when it is printed to indicate it has already been redeemed.

The voucher management application can be configured to manage virtual vouchers from multiple locations. The application can be configured to group the vouchers according to location. As shown in FIG. **4**B, four virtual ticket vouchers from casino "A" are displayed. The voucher management application and a redemption device, such as an EGM or a redemption kiosk can be configured to allow multiple virtual ticket vouchers to be redeemed at once. For example, the user can select 3 or the 4 virtual ticket vouchers in FIG. **4**B and then initiate a redemption transaction with an EGM. The selected vouchers can be transmitted simultaneously and the can be separately validated by the EGM. Each of the validated virtual ticket vouchers can be redeemed for credits on the EGM. The application can be configured to keep a record of each voucher redeemed including a value of the voucher, when it was redeemed and where it was redeemed. Images of the redeemed vouchers can be removed from the portable electronic device or can be organized separately from the virtual ticket vouchers that are still redeemable.

In some instances, the redemption device, such as an EGM, can be configured to require secondary authentication of a virtual ticket voucher. In another example, this feature can be built into the virtual voucher management application. For instance, as shown in interface **232** in FIG. **4**C, the application or EGM can require the user to enter a 4-digit PIN for secondary authentication purposes. In another example, the application or EGM can require the user to enter a password. In yet another example, the user can be required to correctly answer one or more challenge questions. In another embodiment, the application or EGM can receive and verify biometric information.

In some instances, the redemption device, such as an EGM, can be configured to require secondary authentication of a virtual ticket voucher. In another example, this feature can be built into the virtual voucher management application. For instance, as shown in interface **232** in FIG. **4**C, the application can require the user to enter a 4-digit PIN for secondary authentication purposes. In another example, the application can require the user to enter a password. In yet another example, the user can be required to correctly answer one or more challenge questions.

In one embodiment, a second authentication may only be required for transactions above a certain amount, such as $25 dollars. If multiple virtual ticket vouchers are simultaneously redeemed, then the total amount of the transaction based on the value of all of the virtual ticket vouchers being redeemed during the transaction may have to be over a certain amount before secondary authentication is required. An advantage of requiring secondary authentication is that if the portable electronic device is lost or stolen another person may not be able to redeem the virtual ticket vouchers. The voucher management application can be configured to allow a user to back-up their virtual ticket voucher information on another device controlled by the user or a remote storage device in the "cloud." Thus, using the back-up data, it may be possible for the user to recover and redeem their virtual ticket vouchers if a portable electronic device storing the virtual ticket vouchers is lost or stolen.

In another embodiment, the voucher management application can be configured to convert a physically printed ticket voucher to a virtual ticket voucher. For instance, on a device with a camera, an image can be taken of the printed ticket voucher. The application can be configured to parse information from the printed ticket voucher to create a virtual ticket voucher. Later, the virtual ticket voucher

associated with printed ticket voucher can be redeemed for cash or additional game play on a gaming device.

The user can save the printed ticket voucher if desired. If the printed ticket voucher is redeemed before the virtual ticket voucher copy, then a later attempt to redeem the virtual ticket voucher copy will not work because the host system will already have a record that the ticket voucher has been redeemed. If the virtual ticket voucher copy is redeemed before the printed ticket voucher, then a later attempt to redeem the printed ticket voucher will not work because the host system will already have a record that the ticket voucher is redeemed.

In particular embodiments, a gaming device can be configured to issue both a printed ticket voucher and a virtual ticket voucher. The user receiving the printed ticket voucher and the virtual ticket voucher (stored to a device) can then choose which format to use when redeeming the ticket voucher. As an example, a retrofit device or a secondary device on an EGM, such as a card reader, player tracking unit, bill validator or printer, can be configured to issue a virtual ticket voucher when a printed ticket voucher is issued. Thus, the printed ticket voucher can issue normally in response to a cash out request. In addition, the retrofit device or the secondary device can be configured to issue a virtual ticket voucher and communicate the virtual ticket voucher information to a user's portable electronic device.

In yet other embodiment, the voucher management application can be configured to receive an image of a check. Software exists that allows an image of a check to be scanned or a user to take a picture of a check then have the check electronically deposited into a bank account. At a redemption station, rather than receiving cash for a redeemed virtual ticket voucher or a printed ticket voucher, an electronic image or images of a check that can be electronically deposited into a user's bank account can be received via the voucher management application on the user's device. Then, the check can be deposited into the user's bank account. This approach may be preferable to a user than receiving a large amount of cash.

Methods for Managing Virtual Ticket Vouchers on an EGM

Next with respect to FIG. **5**A methods of managing virtual ticket vouchers in an EGM are described. FIG. **5**A is a method **300** in a gaming machine for redeeming virtual ticket vouchers. In **302**, an actuation of an E-cash-in button can be detected. In one embodiment, the E-cash-in button can be a mechanical or a touchscreen button. In another embodiment, a wireless communication, such as a near-field communication, between a portable electronic device and the EGM can be used to initiate the transaction. For instance, a user can wave their portable electronic device near a wireless interface to initiate the E-Cash-in transaction. In response to detecting the request for the E-cash-in transaction, the EGM can initiate a virtual voucher transaction. In one embodiment, the EGM can be configured establish communications with a portable electronic device. After communications are established, via the application, the application the user can initiate a virtual ticket voucher transaction. Thus, a mechanical button or touch screen button on the EGM may not be needed to initiate a virtual ticket voucher transaction.

In **304**, in response, the EGM can initiate a virtual ticket voucher redemption transaction. In one embodiment, the EGM can be configured to activate an interface, such as a wireless interface enabling wireless communications and change the status of a status indicator to indicate the wireless interface is ready to receive virtual ticket voucher information from a portable electronic device. Then, the EGM can initiate a countdown timer. If the virtual ticket voucher information associated with the transaction within a specific time period, then the EGM can be configured to cancel the transaction. If a wireless interface and a status indicator are used, then the states of these devices can be changed. For instance, the wireless interface can be turned off and the state of the status indicator can be changed to indicate the wireless interface is inactive.

In particular embodiments, the wireless communications can be carried out using a wireless protocol, such as NFC, Bluetooth™ or Wi-Fi™. In one embodiment, a combination of wireless protocols can be used. For instance, an NFC communication can be used to set up a device pairing between the EGM and a portable electronic device that uses Bluetooth™ or Wi-Fi™ compatible communications.

In another embodiment, a wireless interface and status interface may not be used. Instead, via an application executing on a portable electronic device and a previously established communication connection between the EGM and the portable electronic device, the application can begin a transfer of virtual ticket voucher information to the EGM in response to receiving a selection initiating the transfer of virtual ticket voucher information. The selection can be made on an interface associated with the application that is generated on the portable electronic device. In **306**, the EGM can receive virtual ticket voucher information from the portable electronic device. If the EGM includes a NFC compatible wireless interface and the portable electronic device is NFC enabled, then the portable electronic device has to be brought into range of the NFC compatible wireless interface, such as within 4 cm or less from the interface to enable the transaction.

In one embodiment, in **308**, the EGM can be configured to output a portion of the virtual ticket voucher information to the display. The output of the virtual ticket voucher information can provide an indication that the virtual ticket voucher information has been received by the EGM **2**. In a particular embodiment, the EGM **2** can be configured to render an image of a ticket voucher to the display including all or a portion the virtual ticket voucher information. The image can be rendered such that the image is similar in format to a printed ticket voucher. The application executing on the portable electronic device can include options, such as a number of ticket voucher templates, which allow a user to customize the appearance of virtual ticket vouchers rendered on the portable electronic device. In one embodiment, some of the custom appearance information selected by the user can be transferred from the portable electronic device to the EGM to affect an appearance of an image rendered and displayed on the EGM of the virtual ticket voucher. In another embodiment, the virtual ticket voucher appearance information can be retrieved from a loyalty program account when a user provides information, such a loyalty program account number. The information retrieved from the loyalty program account can be used to modify the appearance of virtual ticket vouchers rendered on a display of the EGM.

In **310**, the EGM can send virtual ticket voucher information to a remote server for validation purposes. In one embodiment, the virtual ticket voucher information can include unique identification information associated with the portable electronic device. In **312**, the EGM can receive an indication from the remote server that the virtual ticket voucher is valid for a particular value amount. In response, the EGM can redeem the virtual ticket voucher for an amount of credits equivalent to the value amount. The EGM can notify the remote device that the virtual ticket voucher

has been redeemed and optionally notify the portable electronic device. If the EGM receives an indication from the remote server that the virtual ticket voucher is no longer valid, then the EGM can generate and output a notification message that indicates the virtual ticket voucher is invalid. The notification message can include one or more of 1) outputting a text message to a display on the EGM, 2) changing a state of a status indicator, such as a light array, 3) outputting a sound to an audio device on the EGM and 4) sending a message for output on the portable electronic device.

In **314**, the EGM can be configured to store virtual ticket voucher information. In one embodiment, the EGM can store a rendered image of the virtual ticket voucher. In another embodiment, the EGM can update a memory coupled to a cash box with the virtual ticket voucher information. In **316**, hard and soft meters affected by the redemption of the virtual ticket voucher can be updated including soft meters for accumulating a number of virtual ticket voucher accepted and a value of the virtual ticket vouchers accepted. In **318**, the EGM can display the amount of credits or currency redeemed.

In **320**, the EGM can generate a change voucher. If a value of the virtual ticket voucher redeemed results in a fraction of credit based upon a denomination used on the EGM, such as 75 cents remaining on a dollar denomination machine, then the EGM can issue a change voucher. The change voucher is typically issued in a currency amount equivalent to some fraction of a credit. In one embodiment, the EGM can issue a printed ticket voucher for the change amount. In another embodiment the EGM can issue a virtual ticket voucher for the change amount. Details of issuing virtual ticket vouchers are described as follows with respect to FIG. **5**B as follows.

In **322**, the EGM can enter into an operator mode. In one embodiment, the EGM can enter into an operator mode in response to an operator inserting an operator key. In **322**, in operator mode, the EGM can be configured to display virtual ticket voucher information. For instance, the EGM can be configured to output values for soft meters associated with the virtual ticket vouchers. In another example, the EGM can be configured to display virtual ticket voucher information associated with virtual ticket vouchers accepted by the EGM. In one embodiment, the EGM can be configured to render images of the virtual ticket vouchers and/or printed ticket vouchers received at the EGM. The rendered images can be used for dispute resolution purposes. In particular embodiment, the EGM can be configured to receive portable device identification information, locate virtual ticket vouchers received from the portable electronic and display the virtual ticket voucher information to a display on the EGM or to a display on a portable electronic device carried by the operator.

FIG. **5**B is a method **400** in a gaming machine for issuing virtual ticket vouchers on a gaming machine. In **402**, the EGM can detect an activation of an E-cash out button. In various embodiments, the E-cash out button can be a mechanical button coupled to the player interface on the EGM, a touch screen button located on a display on the EGM or an input button on a portable electronic device in communication with the EGM, such as a touch screen button generated by an application executing on the portable electronic device. In response to detecting the activation of the E-cash out button, the EGM can initiate a countdown timer. In addition, in one embodiment, the EGM can be configured to activate a wireless interface on the EGM and change a status indicator to indicate the wireless interface is activated and ready to transmit virtual ticket voucher information from the EGM. In another embodiment, the EGM can already be in communication with the portable electronic device and the activation of the wireless interface and changing a state of the status indicator may not be necessary.

In **406**, the EGM can request virtual ticket voucher information from the remote server. The request can include an amount for the virtual ticket voucher. The virtual ticket voucher information can include a unique ticket validation number and a ticket number. The ticket number can indicate that the ticket voucher is a virtual ticket voucher as opposed to a printed ticket voucher. In **408**, the EGM can generate the virtual ticket voucher. In **410**, the EGM can transmit virtual ticket information to the portable electronic device and receive information from the portable electronic device, such as device identification information. In one embodiment, if a near field communication interface is used, the transmission can require a user to bring the portable electronic device within a threshold distance of the interface for the transmission to take place. In **412**, the EGM can send information received from the portable electronic device to the remote server, such as a portable device identification number. The device information can be associated with the virtual ticket voucher information stored on the remote device. In one embodiment, the device information can be used later in the redemption of the virtual ticket voucher. For instance, unless the correct device information associated with the virtual ticket voucher is received, the remote server won't validate the virtual ticket voucher.

In **414**, the EGM can determine the countdown timer has expired and the virtual ticket voucher transaction is not been completed. In response, in **416**, the EGM can generate a printed ticket voucher with a value amount the same as the virtual ticket voucher. The EGM may change the ticket number to indicate that a printed ticket voucher is being issued. In addition, the EGM can also notify the remote server that the ticket voucher was issued as printed ticket voucher and not a virtual ticket number. The remote server can change the ticket number associated with the printed ticket voucher to reflect the ticket voucher is a printed ticket voucher. In **418**, the EGM can update various soft and/or hard meters depending on the type of ticket voucher issued (virtual or printed) and the value of the ticket voucher.

In **420**, the EGM can enter an operator mode, such as for the purposes of reading the soft meters or for dispute resolution. In **422**, the EGM can be configured to display virtual ticket voucher information associated with previously issued virtual ticket vouchers. In one embodiment, the EGM can be configured to display both virtual ticket information and printed ticket voucher information for previously issued ticket vouchers. The information can include device information, such as unique device identification information associated with a portable electronic device that received the virtual ticket voucher. In one embodiment, images of the virtual ticket vouchers that are formatted like a printed ticket voucher can be rendered to the display.

Next additional details of EGMs and gaming systems are described with respect to FIGS. **6** and **7**. FIG. **6** shows a block diagram of a gaming system **600** in accordance with the described embodiments. The gaming system **600** can include one or more servers, such as server **602**, and a variety of gaming devices including but not limited to table gaming devices, such as **652**, mobile gaming devices, such as **654**, and slot-type gaming devices, such as **656**. The table gaming devices, such as **652**, can include apparatus associated with table games where a live operator or a virtual operator is employed. The gaming devices and one or more servers can communicate with one another via a network

601. The network can include wired, wireless or a combination of wired and wireless communication connections and associated communication routers.

Some gaming devices, such as **652**, **654** and **656**, can be configured with a player interface that allows at least 1) selections, such as a wager amount, associated with a wager-based game to be made and 2) an outcome of the wager-based game to be displayed. As an example, gaming devices, **652**, **654** and **656**, include player interfaces, **652***a*, **654***a* and **656***a*, respectively. Typically, gaming devices with a player interface are located in publically accessible areas, such as a casino floor. On the other hand, some gaming devices, such as server **602**, can be located in publically inaccessible areas, such is in a back-room of a casino or even off-site from the casino. Gaming devices located in publically inaccessible areas may not include a player interface. For instance, server **602** does not include a player interface. However, server **602** includes an administrator interface **635** that allows functions associated with the server **602** to be adjusted.

An example configuration of a gaming device is described with respect to gaming device **604**. The gaming device **604** can include 1) a game controller **606** for controlling a wager-based game played on the gaming device and 2) a player interface **608** for receiving inputs associated with the wager-based game and for displaying an outcome to the wager-based game. In more detail, the game controller **606** can include a) one or more processors, such as **626**, b) memory for holding software executed by the one or more processors, such as **628**, c) a power-hit tolerant memory, such as **630**, d) one or more trusted memories, such as **632**, e) a random number generator and f) a plurality of software applications, **610**. The other gaming devices, including table gaming device **652**, mobile gaming device **654**, slot-type gaming device **656** and server **602**, can each include a game controller with all or a portion of the components described with respect to game controller **606**.

In particular embodiments, the gaming device can utilize a "state" machine architecture. In a "state" machine architecture critical information in each state is identified and queued for storage to a persistent memory. The architecture doesn't advance to the next state from a current state until all the critical information that is queued for storage for the current state is stored to the persistent memory. Thus, if an error condition occurs between two states, such as a power failure, the gaming device implementing the state machine can likely be restored to its last state prior to the occurrence of the error condition using the critical information associated with its last state stored in the persistent memory. This feature is often called a "roll back" of the gaming device. Examples of critical information can include but are not limited to an outcome determined for a wager-based game, a wager amount made on the wager-based game, an award amount associated with the outcome, credits available on the gaming device and a deposit of credits to the gaming device.

The power-hit tolerant memory **630** can be used as a persistent memory for critical data, such as critical data associated with maintaining a "state" machine on the gaming device. One characteristic of a power-hit tolerant memory **630** is a fast data transfer time. Thus, in the event of a power-failure, which might be indicated by a sudden power fluctuation, the critical data can be quickly loaded from volatile memory, such as RAM associated with the processor **626**, into the power-hit tolerant memory **630** and saved.

In one embodiment, the gaming device **605** can be configured to detect power fluctuations and in response, trigger a transfer of critical data from RAM to the power-hit tolerant memory **630**. One example of a power-hit tolerant memory **630** is a battery-backed RAM. The battery supplies power to the normally volatile RAM so that in the event of a power failure data is not lost. Thus, a battery-backed RAM is also often referred to as a non-volatile RAM or NV-RAM. An advantage of a battery-backed RAM is that the fast data transfer times associated with a volatile RAM can be obtained.

The trusted memory **632** is typically a read-only memory of some type that may be designed to be unalterable. An EPROM or EEPROM are two types of memory that can be used as a trusted memory **632**. The gaming device **604** can include one or more trusted memories. Other types of memories, such as Flash memory, can also be utilized as an unalterable memory and the example of an EPROM or EEPROM is provided for purposes of illustration only.

Prior to installation the contents of a trusted memory, such as **632**, can be verified. For instance, a unique identifier, such as a hash value, can be generated on the contents of the memory and then compared to an accepted hash value for the contents of the memory. The memory may not be installed if the generated and accepted hash values do not match. After installation, the gaming device can be configured to check the contents of the trusted memory. For instance, a unique identifier, such as a hash value, can be generated on contents of the trusted memory and compared to an expected value for the unique identifier. If the generated value of the unique identifier and the expected value of the unique identifier don't match, then an error condition can be generated on the gaming device **604**. In one embodiment, the error condition can result in the gaming device entering a tilt state where game play is temporarily disabled on the gaming device.

Sometimes verification of software executed on the gaming device **604** can be performed by a regulatory body, such as a government agency. Often software used by a game controller, such as **606**, can be highly regulated, where only software approved by a regulatory body is allowed to be executed by the game controller **606**. In one embodiment, the trusted memory **632** can store authentication programs and/or authentication data for authenticating the contents of various memories on the gaming device **604**. For instance, the trusted memory **632** can store an authentication program that can be used to verify the contents of a mass storage device, such as **620**, which can include software executed by the game controller **606**.

The random number generator (RNG) **634** can be used to generate random numbers that can be used to determine outcomes for a game of chance played on the gaming device. For instance, for a mechanical or video slot reel type of game, the RNG, in conjunction with a paytable that lists the possible outcomes for a game of chance and the associated awards for each outcome, can be used to generate random numbers for determining reel positions that display the randomly determined outcomes to the wager-based game. In other example, the RNG might be used to randomly select cards for a card game. Typically, as described above, the outcomes generated on a gaming device, such as **604**, are considered critical data. Thus, generated outcomes can be stored to the power-hit tolerant memory **630**.

Not all gaming devices may be configured to generate their own game outcomes and thus, may not use an RNG for this purpose. In some embodiments, game outcomes can be generated on a remote device, such as server **602**, and then transmitted to the gaming device **604** where the outcome and an associated award can be displayed to the player via the

player interface **608**. For instance, outcomes to a slot-type game or a card game can be generated on server **602** and transmitted to the gaming device **604**.

In other embodiments, the gaming device **604** can be used to play central determination games, such as bingo and lottery games. In a central determination game, a pool of game outcomes can be generated and then, particular game outcomes can be selected as needed (e.g., in response to a player requesting to play the central determination game) from the pool of previously generated outcomes. For instance, a pool of game outcomes for a central determination game can be generated and stored on server **602**. Next, in response to a request to play the central determination game on gaming device **604**, one of the outcomes from the pool can be downloaded to the gaming device **604**. A game presentation including the downloaded outcome can be displayed on the gaming device **604**.

In other embodiments, thin client type gaming devices, such as mobile gaming devices used to play wager-based video card or video slot games, may be configured to receive at least game outcomes from a remote device and not use an RNG to generate game outcomes locally. The game outcomes can be generated remotely in response to inputs made on the mobile device, such as an input indicating a wager amount and/or an input to initiate the game. This information can be sent from the mobile device to a remote device, such as from mobile gaming device **654** to server **602**. After receiving the game outcome from the remote device, a game presentation for the game outcomes generated remotely can be generated and displayed on the mobile device. In some instances, the game presentation can also be generated remotely and then streamed for display to the mobile device.

The game controller **606** can be configured to utilize and execute many different types of software applications **610**. Typically, the software applications utilized by the game controller **606** can be highly regulated and may undergo a lengthy approval process before a regulatory body allows the software applications to be utilized on a gaming device deployed in the field, such as in a casino. One type of software application the game controller can utilize is an Operating System (OS). The OS can allow various programs to be loaded for execution by the processor **626**, such as programs for implementing a state machine on the gaming device **606**. Further, the OS can be used to monitor resource utilization on the gaming device **606**. For instance, certain applications, such as applications associated with game outcome generation and game presentation that are executed by the OS can be given higher priority to resources, such as the processor **626** and memory **628**, than other applications that can be executing simultaneously on the gaming device.

As previously described, the gaming device **604** can execute software for determining the outcome of a wager-based game and generating a presentation of the determined game outcome including displaying an award for the game. As part of the game outcome presentation one or more of 1) electro-mechanical devices, such as reels or wheels, can be actuated, 2) video content can be output to video displays, 3) sounds can be output to audio devices, 4) haptic responses can be actuated on haptic devices or 5) combinations thereof, can be generated under control of the game controller **606**. The peripheral devices used to generate components of the game outcome presentation can be associated with the player interface **608** where the types of devices that are utilized for the player interface **608** can vary from device to device.

To play a game, various inputs can be required. For instance, via input devices coupled to the gaming device **604**, a wager amount can be specified, a game can be initiated or a selection of a game choice associated with the play of the game can be made. The software **610** executed by the game controller **606** can be configured to interpret various signals from the input devices, such as signals received from a touch screen controller or input buttons, and affect the game played on the gaming device in accordance with the received input signals. The input devices can also be part of the player interface **608** provided with the gaming device, such as **604**.

In other embodiments, the gaming software **610** executed by the game controller **606** can include applications that allow a game history including the results of a number of past games to be stored, such as the previous 10 or 100 games played on the gaming device **604**. The game history can be stored to a persistent memory including but not limited to the power-hit tolerant memory **630**. The gaming controller **606** can configured to provide a menu (typically, only operator accessible), that allows the results of a past game to be displayed via the player interface **608**. The output from the history menu can include a re-creation of the game presentation associated with a past game outcome, such as a video representation of card hand associated with a video poker game, a video representation of a reel configuration associated with a video slot game, and/or raw data associated with the past game result, such as an award amount, an amount wagered, etc. The history menu can be used for dispute resolution purposes, such as if a player complains that they have not been properly awarded for a game previously played on the gaming device **604**.

The reporting software can be used by the game controller **606** to report events that have occurred on the gaming device **604** to remote device, such as server **602**. For instance, in one embodiment, the game controller **606** can be configured to report error conditions that have been detected on the gaming device **604**, such as if a device has malfunctioned or needs attention. For instance, the reporting software can be used to send a message from the gaming device **604** to the server **602** indicating that a printer on the gaming device needs a refill of tickets. In another embodiment, the gaming controller **606** can be configured to report security events that may have occurred on the gaming device **604**, such as but not limited to if a door is opened, a latch is activated or an interior portion of the gaming device **604** has been accessed.

In yet other embodiments, the game controller **606** can be configured to report gaming activity and associated events that has been generated on the gaming device, such as a deposit of cash or an indicia of credit, at the gaming device, a generation of game outcome including an associated award amount and a dispensation of cash or an indicia of credit from the gaming device **604**. As part of a loyalty program, the gaming activity can be associated with a particular player. The reporting software can include player tracking elements that allow the gaming activity of a particular player to be reported to a remote device, such as server **602**.

The game controller **606** can execute the authentication software to verify the authenticity of data and/or software programs executed on the gaming device **604**. For instance, the authentication software can be used to verify the authenticity of data and/or software applications when they are first downloaded to the gaming device **604**. Further, the authentication software can be used to periodically verify the authenticity of data and/or software applications currently residing on the gaming device, such as software applications stored on one of the memories coupled to the gaming device

604 including applications loaded into the memory 628 for execution by the processor 626.

The communication software executed by the game controller 606 can be used to communicate with a variety of devices remote to the gaming device 604. For instance, the communication software can be used to communicate with one or more of a) servers remote to the device, such as 602, b) other gaming devices, such as table gaming device 652, mobile gaming device 654 and slot-type gaming device 656 and c) mobile devices carried by casino personnel or players in the vicinity of the gaming device 604. Via the communication software, the game controller can be configured to communicate via many different communication protocols. For instance, different wireless and/or wired communication protocols can be implemented. Further, proprietary or non-proprietary gaming specific protocols can be implemented. For instance, gaming specific non-proprietary communication protocols, such as G2S (game to system), GDS (gaming device standard) and S2S (system to system) communication protocols provided by the Gaming Standards Association (GSA), Fremont, Calif., can be implemented on the gaming devices described herein.

The gaming device 604 can communicate with one or more remote devices via one or more network interfaces, such as 612. For instance, via network interfaces 612 and the network 601, the gaming device 604 can communicate with other gaming devices, such as server 602 and/or gaming devices, 652, 654 and 656. The network interfaces can provide wired or wireless communications pathways for the gaming device 604. Some gaming devices may not include a network interface or can be configured to operate in a stand-alone mode where the network interface is not connected to a network.

In other embodiments, a mobile device interface or interfaces, such as 614, can be provided for communicating with a mobile device, such as a cell phone or a tablet computer carried by players or casino personnel temporarily in the vicinity of the gaming device 604. A wireless communication protocol, such as Bluetooth™ and a Wi-Fi compatible standard, can be used for communicating with the mobile devices via the mobile device interfaces 614. In one embodiment, the mobile device interface can implement a short range communication protocol, such as a near-field communication (NFC) protocol used for mobile wallet applications. NFC is typically used for communication distances of 4 cm or less. In addition, a wired communication interface, such as a docking station, can be integrated into the gaming device, such as 604. The wired communication interface can be configured to provide communications between the gaming device 604 and the mobile device and/or providing power to the mobile device.

Near field communication, or NFC, allows for simplified transactions, data exchange, and connections with a touch. Formed in 2004, the Near Field Communication Forum (NFC Forum) promotes sharing, pairing, and transactions between NFC devices and develops and certifies device compliance with NFC standards. NFC's short range helps keep encrypted identity documents private. Thus, a smartphone or tablet with an NFC chip can make a credit card/debit card payment to a gaming device or serve as keycard or ID card for a loyalty program. Further, an NFC device can act a hotel room key. The user of an NFC device as a hotel room keys and/or a player tracking card instrument may allow fast VIP check-in and reduce staffing requirements.

NFC devices can read NFC tags on a gaming device 604 to get more information about the gaming device including an audio or video presentation. For instance, a tap of an NFC enabled device to a gaming device can be used to instantly share a contact, photo, song, application, video, or website link. In another example, an NFC enabled device can be used to transfer funds to the gaming device or enter the player in a multi-player tournament. As another example, an NFC enabled device can be used to receive information from a gaming device that can be used in a persistent gaming application or a social media application.

Further, NFC enabled signage can include NFC tags that allow a patron to learn more information about the content advertised in the signage. The NFC enabled signage can be part of a gaming system. For instance, a sign advertising a show available at the casino can be configured to transfer information about the show, show times and ticketing information via an NFC tag. As another example, a sign showing jackpot information, such as progressive jackpot information, can be used to transfer information about the jackpot, such as the last time the jackpot was won and where it was won.

In one embodiment, an NFC interface on a gaming device can be used to set-up a higher speed communication between the gaming device and another NFC enabled device such as smart phone. The higher speed communication rates can be used for expanded content sharing. For instance, a NFC and Bluetooth enabled gaming device can be tapped by an NFC and Bluetooth enabled smart phone for instant Bluetooth pairing between the devices. Instant Bluetooth pairing between a gaming device and an NFC enabled device, such as a smartphone, can save searching, waiting, and entering codes. In another example, a gaming device can be configured as an NFC enabled router, such as a router supporting a Wi-Fi communication standard. Tapping an NFC enabled device to an NFC enabled and Wi-Fi enabled gaming device can be used to establish a Wi-Fi connection between the two devices.

The gaming device 604 can include one or more each of value input devices 616 and value output device 618. The value input devices 616 can be used to deposit cash or indicia of credit onto the gaming device. The cash or indicia of credit can be used to make wagers on games played on the gaming device 604. Examples of value input devices 616 include but are not limited to a magnetic-striped card or smart card reader, a bill and/or ticket acceptor, a network interface for downloading credits from a remote source, a wireless communication interface for reading credit data from nearby devices and a coin acceptor. A few examples of value input devices are shown in FIG. 7.

The value output devices can be used to dispense cash or indicia of credit from the gaming device 604. Typically, the indicia of credit can be exchanged for cash. For instance, the indicia of credit can be exchanged at a cashier station or at a redemption station. Examples of value output devices can include a network interface for transferring credits into a remote account, a wireless communication interface that can be used with a mobile device implementing mobile wallet application, a coin hopper for dispensing coins or tokens, a bill dispenser, a card writer, a printer for printing tickets or cards redeemable for cash or credits. Another type of value output device is a merchandise dispenser, which can be configured to dispense merchandise with a tangible value from a gaming device. A few examples of value output devices are shown in FIG. 7.

The combination of value input devices 616 and value output devices 618 can vary from device to device. In some embodiments, a gaming device 604 may not include a value input device or a value output device. For instance, a

thin-client gaming device used in a mobile gaming application may not include a value input device and a value output device. Instead, a remote account can be used to maintain the credits won or lost from playing wager-based games via the mobile device. The mobile device can be used to access the account and affect the account balance via game play initiated on the mobile device. Credits can be deposited or withdrawn from the remote account via some mechanism other than via the mobile device interface.

In yet other embodiments, the gaming device **604** can include one or more secondary controllers **619**. The secondary controllers can be associated with various peripheral devices coupled to the gaming device, such as the value input devices and value output devices described in the preceding paragraphs. As another example, the secondary controllers can be associated with peripheral devices associated with the player interface **608**, such as input devices, video displays, electro-mechanical displays and a player tracking unit. In some embodiments, the secondary controllers can receives instructions and/or data from and provide responses to the game controller **606**. The secondary controller can be configured to interpret the instructions and/or data from the game controller **606** and control a particular device according to the received instructions and/or data. For instance, a print controller may receive a print command with a number of parameters, such as a credit amount and in response print a ticket redeemable for the credit amount. In another example, a touch screen controller can detect touch inputs and send information to the game controller **606** characterizing the touch input.

In a particular embodiment, a secondary controller can be used to control a number of peripheral devices independently of the game controller **606**. For instance, a player tracking unit can include one or more of a video display, a touch screen, card reader, network interface or input buttons. A player tracking controller can control these devices to provide player tracking services and bonusing on the gaming device **604**. In alternate embodiments, the game controller **604** can control these devices to perform player tracking functions. An advantage of performing player tracking functions via a secondary controller, such as a player tracking controller, is that since the player tracking functions don't involve controlling the wager-based game, the software on the player tracking unit can be developed modified via a less lengthy and regulatory intensive process than is required for software executed by the game controller **606**, which does control the wager-based game. In general, using a secondary controller, certain functions of the gaming device **604** that are not subject to as much regulatory scrutiny as the game play functions can be decoupled from the game controller **606** and implemented on the secondary controller instead. An advantage of this approach, like for the player tracking controller, is that software approval process for the software executed by the secondary controller can be less intensive than the process needed to get software approved for the game controller.

A mass storage unit(s) **620**, such as a device including a hard drive, optical disk drive, flash memory or some other memory storage technology can be used to store applications and data used and/or generated by the gaming device **604**. For instance, a mass storage unit, such as **620**, can be used to store gaming applications executed by the game controller **606** where the gaming device **604** can be configured to receive downloads of game applications from remote devices, such as server **602**. In one embodiment, the game controller **606** can include its own dedicated mass storage unit. In another embodiment, critical data, such as game history data stored in the power-hit tolerant memory **630** can be moved from the power-hit tolerant memory **630** to the mass storage unit **620** at periodic intervals for archival purposes and to free up space in the power-hit tolerant memory **630**.

The gaming device **604** can include security circuitry **622**, such as security sensors and circuitry for monitoring the sensors. The security circuitry **622** can be configured to operate while the gaming device is receiving direct power and operational to provide game play as well as when the gaming device is uncoupled from direct power, such as during shipping or in the event of a power failure. The gaming device **604** can be equipped with one or more secure enclosures, which can include locks for limiting access to the enclosures. One or more sensors can be located within the secure enclosures or coupled to the locks. The sensors can be configured to generate signals that can be used to determine whether secure enclosures have been accessed, locks have been actuated or the gaming device **604**, such as a mobile device has been moved to an unauthorized area. The security monitoring circuitry can be configured to generate, store and/or transmit error events when the security events, such as accessing the interior of the gaming device, have occurred. The error events may cause the game controller **606** to place itself in a "safe" mode where no game play is allowed until the error event is cleared.

The server **602** can be configured to provide one or more functions to gaming devices or other servers in a gaming system **600**. The server **602** is shown performing a number of different functions. However, in various embodiments, the functions can be divided among multiple servers where each server can communicate with a different combination of gaming devices. For instance, player interface support **636** and gaming device software **638** can be provided on a first server, progressives can be provided on a second server, loyalty program functions **640** and accounting **648** can be provided on a third server, linked gaming **644** can be provided on a fourth server, cashless functions **646** can be provided on a fifth server and security functions **650** can be provided on a sixth server. In this example, each server can communicate with a different combination of gaming devices because each of the functions provided by the servers may not be provided to every gaming device in the gaming system **600**. For instance, the server **602** can be configured to provide progressive gaming functions to gaming devices **604**, **652** and **656** but not gaming device **654**. Thus, the server **602** may not communicate with the mobile gaming device **654** if progressive functions are not enabled on the mobile gaming device at a particular time.

Typically, each server can include an administrator interface that allows the functions of a server, such as **602**, to be configured and maintained. Each server **602** can include a processor and memory. In some embodiments, the servers, such as **602**, can include a game controller with components, such as but not limited to a power-hit tolerant memory **630**, a trusted memory **632** and an RNG **634** described with respect to gaming device **604**. The servers can include one or more network interfaces on which wired or wireless communication protocols can be implemented. Next, some possible functions provided by the server **602** are described. These functions are described for the purposes of illustration only and are not meant to be limiting.

The player interface support **636** can be used to serve content to gaming devices, such as **604**, **652**, **654** and **656**, remote to the server. The content can include video and audio content that can be output on one of the player interfaces, such as **608**, **652***a*, **654***a* and **656***a*. Further, the

content can be configured to utilize unique features of a particular player interface, such as video displays, wheels or reels, if the particular player interface is so equipped.

In one embodiment, via the player interface support, content can be output to all or a portion of a primary video display that is used to output wager-based game outcomes on a player interface associated with a gaming device. For instance, a portion of the primary display can be allocated to providing a "service window" on the primary video display where the content in the service window is provided from a server remote to the gaming device. In particular embodiments, the content delivered from the server to a gaming device as part of the player interface support **636** can be affected by inputs made on the gaming device. For instance, the service window can be generated on a touch screen display where inputs received via the service window can be sent back to server **602**. In response, to the received inputs, the server **602** can adjust the content that is displayed on the remote gaming device that generated the inputs.

The "service window" application can be generated by software code that is executed independently of other game controller software in a secure "sandbox." Via the sandbox, an executable can be given limited access to various resources on an EGM, such as a portion of the CPU resources and memory available on a game controller. The memory can be isolated from the memory used by other processes, such as game processes executed by the game controller.

As described above, a service window application can be allowed to control, send and/or receive data from secondary devices on a gaming device, such as a video display, a touch screen power interfaces or communication interfaces. A service window application allowed to utilize a communication interface, such as a wireless communication interface, can be configured to communicate with a portable electronic device via the communication interface. Thus, a service window application can be configured to implement attract features as described above independently of a game controller on an EGM. Further details of utilizing a service window on a gaming device on an EGM are described in U.S. patent application Ser. No. 12/209,608, by Weber et al., filed Sep. 12, 2008, titled "Gaming Machine with Externally Controlled Content Display," which is incorporated herein by reference in its entirety and for all purposes.

In another embodiment, via the video display, the service window application can be configured to output data in an optical image format, such as a 1-D/2-D bar-code or a QR code. The optically formatted data can be captured by a camera on the portable electronic device. For instance, a receipt indicating the acceptance of a virtual ticket voucher or virtual currency on the gaming device can be displayed in the service window in a QR code format and transferred to a user's portable electronic device via an image capture device on their portable electronic device. In another embodiment, virtual ticket voucher information can be transferred to a portable electronic device as optically formatted image data.

If a player's identity is known, then the player interface support **636** can be used to provide custom content to a remote gaming device, such as **604**. For instance, a player can provide identification information, such as information indicating their membership in a loyalty program, during their utilization of a gaming device. The custom content can be selected to meet the identified player's interests. In one embodiment, the player's identity and interests can be managed via a loyalty program, such as via a loyalty program account associated with loyalty function **640**. The custom content can include notifications, advertising and specific offers that are determined to be likely of interest to a particular player.

The gaming device software function **638** can be used to provide downloads of software for the game controller and/or second controllers associated with peripheral devices on a gaming device. For instance, the gaming device software **638** may allow an operator and/or a player to select a new game for play on a gaming device. In response to the game selection, the gaming device software function **638** can be used to download game software that allows a game controller to generate the selected game. In another example, in response to determining that a new counterfeit bill is being accepted by bill acceptors in the gaming system **600**, the gaming device software function **638** can be used to download a new detection algorithm to the bill acceptors that allow the counterfeit bill to be detected.

The progressive gaming function **642** can be used to implement progressive game play on one or more gaming devices. In progressive game play, a portion of wagers associated with the play of a progressive game is allocated to a progressive jackpot. A group of gaming devices can be configured to support play of the progressive game and contribute to the progressive jackpot. In various embodiments, the gaming devices contributing to a progressive jackpot may be a group of gaming devices collocated near one another, such as a bank of gaming machines on a casino floor, a group of gaming devices distributed throughout a single casino, or group of gaming devices distributed throughout multiple casinos (e.g., a wide area progressive). The progressive gaming function **642** can be used to receive the jackpot contributions from each of the gaming devices participating in the progressive game, determine a current jackpot and notify participating gaming devices of the current progressive jackpot amount, which can be displayed on the participating gaming devices if desired.

The loyalty function **640** can be used to implement a loyalty program within a casino enterprise. The loyalty function **640** can be used to receive information regarding activities within a casino enterprise including gaming and non-gaming activities and associate the activities with particular individuals. The particular individuals can be known or may be anonymous. The loyalty function **640** can used to store a record of the activities associated with the particular individuals as well as preferences of the individuals if known. Based upon the information stored with the loyalty function **640** comps (e.g., free or discounted services including game play), promotions and custom contents can be served to the particular individuals.

The linked gaming function **644** can be used to used provide game play activities involving player participating as a group via multiple gaming devices. An example, a group of player might be competing against one another as part of a slot tournament. In another example, a group of players might be working together in attempt to win a bonus that can be shared among the players.

The cashless function **646** can enable the redemption and the dispensation of cashless instruments on a gaming device. For instance, via the cashless function, printed tickets, serving as a cashless instrument, can be used to transfer credits from one gaming device to another gaming device. Further, the printed tickets can be redeemed for cash. The cashless function can be used to generate identifying information that can be stored to a cashless instrument, such as a printed ticket, that allows the instrument to later be authenticated. After authentication, the cashless instrument can be used for additional game play or redeemed for cash.

The accounting function can receive transactional information from various gaming devices within the gaming system **600**. The transactional information can relate to value deposited on each gaming device and value dispensed from each gaming device. The transactional information, which can be received in real-time, can be used to assess the performance of each gaming device as well as an overall performance of the gaming system. Further, the transactional information can be used for tax and auditing purposes.

The security function **650** can be used to combat fraud and crime in a casino enterprise. The security function **650** can be configured to receive notification of a security event that has occurred on a gaming device, such as an attempt at illegal access. Further, the security function **650** can receive transactional data that can be used to identify if gaming devices are being utilized in a fraudulent or unauthorized manner. The security function **650** can be configured to receive, store and analyze data from multiple sources including detection apparatus located on a gaming device and detection apparatus, such as cameras, distributed throughout a casino. In response to detecting a security event, the security function **650** can be configured to notify casino personnel of the event. For instance, if a security event is detected at a gaming device, a security department can be notified. Depending on the security event, one or more team members of the security department can be dispatched to the vicinity of the gaming device. Next, a perspective diagram of a slot-type gaming device that can include all or a portion of the components described with respect to gaming device **604** is described.

FIG. **7** shows a perspective drawing of a gaming device **700** in accordance with the described embodiments. The gaming device **700** is example of what can be considered a "thick-client." Typically, a thick-client is configurable to communicate with one or more remote servers but provides game play, such as game outcome determination, independent of the remote servers. In addition, a thick-client can be considered as such because it includes cash handling capabilities, such as peripheral devices for receiving cash, and a secure enclosure within the device for storing the received cash. In contrast, thin-client device, such as a mobile gaming device, may be more dependent on a remote server to provide a component of the game play on the device, such as game outcome determination, and/or may not include peripheral devices for receiving cash and an associated enclosure for storing it.

Many different configurations are possible between thick and thin clients. For instance, a thick-client device, such as **700**, deployed in a central determination configuration, may receive game outcomes from a remote server but still provide cash handling capabilities. Further, the peripheral devices can vary from gaming device to gaming device. For instance, the gaming device **700** can be configured with electro-mechanical reels to display a game outcome instead of a video display, such as **710**. Thus, the features of gaming device **700** are described for the purposes of illustration only and are not meant to be limiting.

The gaming device **700** can include a main cabinet **702**. The main cabinet **702** can provide a secure enclosure that prevents tampering with the device components, such as a game controller (not shown) located within the interior of the main cabinet and cash handing devices including a coin acceptor **720**, a ticket printer **726** and a bill acceptor **718**. The main cabinet can include an access mechanism, such as door **704**, which allows an interior of the gaming device **700** to be accessed. The actuation of the door **704** can be controlled by a locking mechanism, such as lock **716**. The lock **716**, the door **704** and the interior of the main cabinet **702** can be monitored with security sensors for detecting whether the interior has been accessed. For instance, a light sensor can be provided to detect a change in light-level in response to the door **704** being opened.

The interior of the main cabinet **700** can include additional secure enclosure, which can also be fitted with locking mechanisms. For instance, the game controller, such as game controller **606**, shown in FIG. **6**, can be secured within a separate locked enclosure. The separate locked enclosure for the game controller may allow maintenance functions to be performed on the gaming device, such as emptying a drop box for coins, emptying a cash box or replacing a device, while preventing tampering with the game controller. Further, in the case of device with a coin acceptor, **720**, the separate enclosure can protect the electronics of the game controller from potentially damaging coin dust.

A top box **706** can be mounted to the top of the main cabinet **702**. A number of peripheral devices can be coupled to the top box **706**. In FIG. **7**, a display device **708** and a candle device **714** are mounted to the top box **706**. The display device **708** can be used to display information associated with game play on the gaming device **700**. For instance, the display device **708** can be used to display a bonus game presentation associated with the play of a wager-based game (One or more bonus games are often features of many wager-based games). In another example, the display device **708** can be used to display information associated with a progressive game, such as one or more progressive jackpot amounts. In yet another example, the display device **708** can be used to display an attract feature that is intended to draw a potential player's attention to the gaming device **700** when it is not in use.

The candle device **714** can include a number of lighting elements. The lighting elements can be lit in different patterns to draw attention to the gaming device. For instance, one lighting pattern may indicate that service is needed at the gaming device **700** while another light pattern may indicate that a player has requested a drink. The candle device **714** is typically placed at the top of gaming device **700** to increase its visibility. Other peripheral devices, including custom bonus devices, such as reels or wheels, can be included in a top box **706** and the example in FIG. **7** is provided for illustrative purposes only. For instance, some of the devices coupled to the main cabinet **702**, such as printer **726**, can be located in a different top box configuration.

The gaming device **700** provides a player interface that allows the play of a game, such as wager-based game. In this embodiment, the player interface includes 1) a primary video display **710** for outputting video images associated with the game play, 2) audio devices, such as **722**, for outputting audio content associated with game play and possibly casino operations, 3) an input panel **712** for at least providing game play related inputs and 4) a secondary video display **708** for outputting video content related to the game play (e.g., bonus material) and/or the casino enterprise (e.g., advertising). In particular embodiments, one or both of the video displays, **708** and **710**, can be equipped with a touch screen sensor and associated touch screen controller, for detecting touch inputs, such as touch inputs associated with the play of a game or a service window output to the display device.

The input panel **712** can include a number of electro-mechanical input buttons, such as **730**, and/or touch sensitive surfaces. For instance, the input panel can include a touch screen equipped video display to provide a touch sensitive surface. In some embodiments, the functions of the

electro-mechanical input buttons can be dynamically reconfigurable. For instance, the function of the electro-mechanical input buttons may be changed depending on the game that is being played on the gaming device. To indicate function changes, the input buttons can each include a configurable display, such as an e-ink or a video display for indicating the function of button. The output of the configurable display can be adjusted to account for a change in the function of the button.

The gaming device **700** includes a card reader **728**, a printer **726**, a coin acceptor **720**, a bill and/or ticket acceptor **720** and a coin hopper (not shown) for dispensing coins to a coin tray **732**. These devices can provide value input/output capabilities on the gaming device **700**. For instance, the printer **726** can be used to print out tickets redeemable for cash or additional game play. The tickets generated by printer **726** as well as printers on other gaming devices can be inserted into bill and ticket acceptor **718** to possibly add credits to the gaming device **700**. After the ticket is authenticated, credits associated with the ticket can be transferred to the gaming device **700**.

The device **718** can also be used to accept cash bills. After the cash bill is authenticated, it can be converted to credits on the gaming device and used for wager-based game play. The coin acceptor **720** can be configured to accept coins that are legal tender or tokens, such as tokens issued by a casino enterprise. A coin hopper (not shown) can be used to dispense coins that are legal tender or tokens into the coin tray **732**.

The various aspects, embodiments, implementations or features of the described embodiments can be used separately or in any combination. Various aspects of the described embodiments can be implemented by software, hardware or a combination of hardware and software. The computer readable medium is any data storage device that can store data which can thereafter be read by a computer system. Examples of the computer readable medium include read-only memory, random-access memory, CD-ROMs, DVDs, magnetic tape and optical data storage devices. The computer readable medium can also be distributed over network-coupled computer systems so that the computer readable code is stored and executed in a distributed fashion.

The foregoing description, for purposes of explanation, used specific nomenclature to provide a thorough understanding of the invention. However, it will be apparent to one skilled in the art that the specific details are not required in order to practice the invention. Thus, the foregoing descriptions of specific embodiments of the present invention are presented for purposes of illustration and description. They are not intended to be exhaustive or to limit the invention to the precise forms disclosed. It will be apparent to one of ordinary skill in the art that many modifications and variations are possible in view of the above teachings.

The embodiments were chosen and described in order to best explain the principles of the invention and its practical applications, to thereby enable others skilled in the art to best utilize the invention and various embodiments with various modifications as are suited to the particular use contemplated. It is intended that the scope of the invention be defined by the following claims and their equivalents.

While the embodiments have been described in terms of several particular embodiments, there are alterations, permutations, and equivalents, which fall within the scope of these general concepts. It should also be noted that there are many alternative ways of implementing the methods and apparatuses of the present embodiments. It is therefore intended that the following appended claims be interpreted as including all such alterations, permutations, and equivalents as fall within the true spirit and scope of the described embodiments.

What is claimed is:

**1**. A gaming device comprising:

a wireless interface;

a communication interface;

a controller including a processor and a memory which stores a plurality of instructions, which when executed by the processor, cause the processor to:

in association with a virtual ticket electronic cash-in transaction:

receive, via the wireless interface, information representing a first gaming establishment virtual ticket voucher from a portable electronic device,

validate the first gaming establishment virtual ticket voucher using at least the information representing the first gaming establishment virtual ticket voucher received from the portable electronic device, and

send virtual ticket voucher information, via the communication interface, to a game controller of an electronic gaming machine which is different from the controller, wherein a credit balance of the electronic gaming machine is modified at least partially based on a credit amount associated with the first gaming establishment virtual ticket voucher, and wherein the credit balance is decreasable based on a wager amount subsequently placed on a play of a wagering game;

in association with a virtual ticket electronic cash-out transaction:

receive a signal to request the virtual ticket electronic cash-out transaction,

receive, from the game controller and via the communication interface, a gaming establishment ticket voucher validation number and an amount associated with the gaming establishment ticket voucher validation number, and

send, via the wireless interface, a second gaming establishment virtual ticket voucher to the portable electronic device, the second gaming establishment virtual ticket voucher including the gaming establishment ticket voucher validation number and the amount associated with the gaming establishment ticket voucher validation number; and

update one or more virtual ticket meters that accumulate virtual ticket voucher information, wherein the one or more virtual ticket meters updated by the controller are separate from a printed ticket meter updated by the game controller of the electronic gaming machine that is used for recording printed ticket voucher information.

**2**. The gaming device of claim **1**, wherein when executed by the processor, the instructions cause the processor to read at least one of a magnetic striped card and a smart card.

**3**. The gaming device of claim **1**, wherein when executed by the processor, the instructions cause the processor to generate a printed ticket voucher.

**4**. The gaming device of claim **1**, wherein when executed by the processor, the instructions cause the processor to accept and read data from at least one of: a printed ticket voucher and a bill of currency.

**5**. The gaming device of claim **1**, further comprising a network interface, wherein when executed by the processor,

the instructions cause the processor to communicate, via the network interface, inputted loyalty program information to a loyalty program server.

**6**. The gaming device of claim **1**, further comprising a display, wherein when executed by the processor, the instructions cause the processor to cause the display to output virtual ticket voucher information.

**7**. The gaming device of claim **1**, further comprising a non-volatile memory, wherein when executed by the processor, the instructions cause the processor to cause the non-volatile memory to store virtual ticket voucher information.

**8**. The gaming device of claim **7**, wherein the one or more virtual ticket meters are one or more soft meters, and when executed by the processor, the instructions cause the processor to: (i) update the one or more soft meters that accumulate virtual ticket voucher information stored in the non-volatile memory, (ii) maintain the one or more soft meters when error conditions occur on the gaming device, and (iii) only reset the one or more soft meters when the gaming device is placed in an operator mode.

**9**. The gaming device of claim **1**, wherein the wireless interface and controller are compatible with a near-field communication protocol.

**10**. The gaming device of claim **1**, wherein when executed by the processor, the instructions cause the processor to turn on the wireless interface in response to receiving the signal from one of: a first input button, and a second input button.

**11**. The gaming device of claim **1**, further comprising a status indicator, wherein when executed by the processor, the instructions cause the processor to control the status indicator to indicate a status of the wireless interface.

**12**. The gaming device of claim **1**, wherein when executed by the processor during a virtual ticket voucher transaction, the instructions cause the processor to send a notification to the game controller that causes the game controller to update the printed ticket meter in the same manner as if a printed ticket voucher transaction occurred.

**13**. The gaming device of claim **1**, wherein the first gaming establishment virtual ticket voucher and the second gaming establishment virtual ticket voucher are different virtual ticket vouchers.

**14**. The gaming device of claim **1**, wherein the electronic gaming machine includes a housing, and a plurality of input devices supported by the housing, said plurality of input devices including (i) an acceptor, and (ii) a cashout device, wherein the game controller of the electronic gaming machine is configured to: responsive to a physical item being received via the acceptor, modify the credit balance based, at least in part, on a monetary value associated with the received physical item, and responsive to a cashout input being received via the cashout device, cause an initiation of any payout associated with the credit balance.

**15**. A gaming device comprising:

a wireless interface configured to communicate with a portable electronic device;

a first communication interface configured to communicate with a game controller on an electronic gaming machine, said electronic gaming machine configured to be coupled the gaming device;

a second communication interface configured to communicate with a remote server;

a controller including a processor and a memory which stores a plurality of instructions, which when executed by the processor, cause the processor to:

upon receiving a request for a virtual ticket electronic cash-in transaction:

receive, via the wireless interface, information representing a first gaming establishment virtual ticket voucher from a portable electronic device, and

in response to receiving the information representing the first gaming establishment virtual ticket voucher:

validate the first gaming establishment virtual ticket voucher using at least the information representing the first gaming establishment virtual ticket voucher received from the portable electronic device, and

send, via the first communication interface, virtual ticket voucher information to the game controller of the electronic gaming machine, wherein a credit balance of the electronic gaming machine is modified at least partially based on a credit amount associated with the first gaming establishment virtual ticket voucher, and wherein the credit balance is decreasable based on a wager amount subsequently placed on a play of a wagering game,

upon receiving a request for a virtual ticket electronic cash-out transaction:

receive, from the game controller and via the first communication interface, a gaming establishment ticket voucher validation number and an amount associated with the gaming establishment ticket voucher validation number, and

send to the portable electronic device, via the wireless interface, a second gaming establishment virtual ticket voucher including the gaming establishment ticket voucher validation number and the amount associated with the gaming establishment ticket voucher validation number;

update one or more soft virtual ticket meters that accumulate virtual ticket voucher information, wherein the one or more soft virtual ticket meters updated by the controller are separate from a printed ticket meter updated by the game controller of the electronic gaming machine that is used for recording printed ticket voucher information.

**16**. The gaming device of claim **15** wherein the request for the virtual ticket electronic cash-in transaction is received from one selected from the group consisting of: the game controller, the portable electronic device and the remote server.

**17**. The gaming device of claim **15** wherein the request for the virtual ticket electronic cash-out transaction is received from one selected from the group consisting of: the game controller, the portable electronic device and the remote server.

**18**. The gaming device of claim **15**, wherein the virtual ticket voucher information received from the portable electronic device is sent to one selected from the group consisting of: the remote server and the game controller.

**19**. The gaming device of claim **15**, wherein the gaming establishment ticket voucher validation number is received from the remote server.

**20**. The gaming device of claim **15**, wherein the request for the virtual ticket electronic cash-in transaction is a detected actuation of an input button.

**21**. The gaming device of claim **15**, wherein the request for the virtual ticket electronic cash-out transaction is a detected actuation of an input button.

**22**. The gaming device of claim **15**, further comprising an interface, wherein when executed by the processor, the

instructions cause the processor to cause the interface to output information related to one selected from the group consisting of: the virtual ticket electronic cash-in transaction and the virtual ticket electronic cash-out transaction.

**23**. The gaming device of device **22** wherein when executed by the processor, the instructions cause the processor to cause the interface to output at least one selected from the group consisting of: a sound and a verbal message.

**24**. The gaming device of claim **22** wherein when executed by the processor, the instructions cause the processor to cause the interface to output at least one selected from the group consisting of: a light pattern and a readable message.

**25**. The gaming device of claim **15** wherein when executed by the processor, the instructions cause the processor to cause a status indicator to indicate a status of the wireless interface.

**26**. The gaming device of claim **15** wherein when executed by the processor, the instructions cause the processor to cause a status indicator to indicate a status of a communication session established between the gaming device and the portable electronic device.

**27**. The gaming device of claim **15** wherein when executed by the processor, the instructions cause the processor to output the virtual ticket voucher and a printed ticket voucher including the gaming establishment ticket validation number.

**28**. The gaming device of claim **15** wherein when executed by the processor, the instructions cause the processor to output the virtual ticket voucher and a printed receipt indicating the virtual ticket voucher has been issued.

**29**. The gaming device of claim **15**, wherein when executed by the processor, the instructions cause the processor to receive at least one selected from the group consisting of: biometric information, a pin and a password for validating the virtual ticket voucher.

**30**. The gaming device of claim **15**, wherein when executed by the processor, the instructions cause the processor emulate a bill validator of the electronic gaming machine to send the virtual ticket voucher information to the game controller in the form of a printed ticket voucher transaction.

**31**. The gaming device of claim **15**, wherein when executed by the processor, the instructions cause the processor to emulate a printer of the electronic gaming machine after receiving the gaming establishment ticket voucher validation number and an amount associated with the gaming establishment ticket voucher validation number to respond to the gaming controller as if it were the printer and as if the printer had issued a paper ticket.

**32**. The gaming device of claim **15**, wherein when executed by the processor during a virtual ticket voucher transaction, the instructions cause the processor to send a notification to the game controller that causes the game controller to update the printed ticket meter in the same manner as if a printed ticket voucher transaction occurred.

**33**. The gaming device of claim **15**, wherein the first gaming establishment virtual ticket voucher and the second gaming establishment virtual ticket voucher are different virtual ticket vouchers.

**34**. The gaming device of claim **15**, wherein the electronic gaming machine includes a housing, and a plurality of input devices supported by the housing, said plurality of input devices including (i) an acceptor, and (ii) a cashout device, wherein the game controller of the electronic gaming machine is configured to: responsive to a physical item being received via the acceptor, modify the credit balance based, at least in part, on a monetary value associated with the received physical item, and responsive to a cashout input being received via the cashout device, cause an initiation of any payout associated with the credit balance.

* * * * *