US006427120B1

(12) **United States Patent**
Garin et al.

(10) **Patent No.: US 6,427,120 B1**
(45) **Date of Patent: Jul. 30, 2002**

(54) **INFORMATION TRANSFER IN A MULTI-MODE GLOBAL POSITIONING SYSTEM USED WITH WIRELESS NETWORKS**

(75) Inventors: **Lionel Jacques Garin**, Palo Alto; **Kanwar Chadha**, Los Gatos; **Gregory Bret Turetzky**, San Jose; **Ashutosh Pande**, Milpitas, all of CA (US)

(73) Assignee: **SIRF Technology, Inc.**, San Jose, CA (US)

(*) Notice: Subject to any disclaimer, the term of this patent is extended or adjusted under 35 U.S.C. 154(b) by 0 days.

(21) Appl. No.: **09/795,871**

(22) Filed: **Feb. 28, 2001**

Related U.S. Application Data

(60) Provisional application No. 60/225,076, filed on Aug. 14, 2000.

(51) **Int. Cl.**[7] **H04B 7/185**
(52) **U.S. Cl.** **701/213**; 342/357.09
(58) **Field of Search** 701/213; 340/989; 342/357.09, 357.13, 352, 356

(56) **References Cited**

U.S. PATENT DOCUMENTS

5,177,490 A * 1/1993 Ando et al. 342/352
5,223,844 A 6/1993 Mansell et al. 342/357
5,347,284 A * 9/1994 Volpi et al. 342/356
5,587,715 A * 12/1996 Lewis 342/357
5,739,786 A * 4/1998 Greenspan et al. 342/357
6,104,712 A * 8/2000 Robert et al. 370/389
6,111,541 A * 8/2000 Karmel 342/357.13
6,211,819 B1 * 4/2001 King et al. 342/357.09
6,222,484 B1 4/2001 Seiple et al. 342/357.09
6,236,365 B1 * 5/2001 LeBlanc et al. 342/457

* cited by examiner

Primary Examiner—William A. Cuchlinski, Jr.
Assistant Examiner—Olga Hernandez
(74) *Attorney, Agent, or Firm*—Hogan & Hartson, L.L.P.

(57) **ABSTRACT**

The present invention discloses a GPS system that can operate in different modes depending on the network facilities and bandwidth available, the GPS information that can be acquired, or user or system requirements. The modes comprise standalone mode, where a mobile communications device computes the position of the device, an autonomous mode, where the mobile communications device transmits the computed position to a server, application, or PSAP in a communications network, a network aided mode, where the network aides the mobile communications device in determining the position of the device, a network based mode, and other modes.

15 Claims, 6 Drawing Sheets

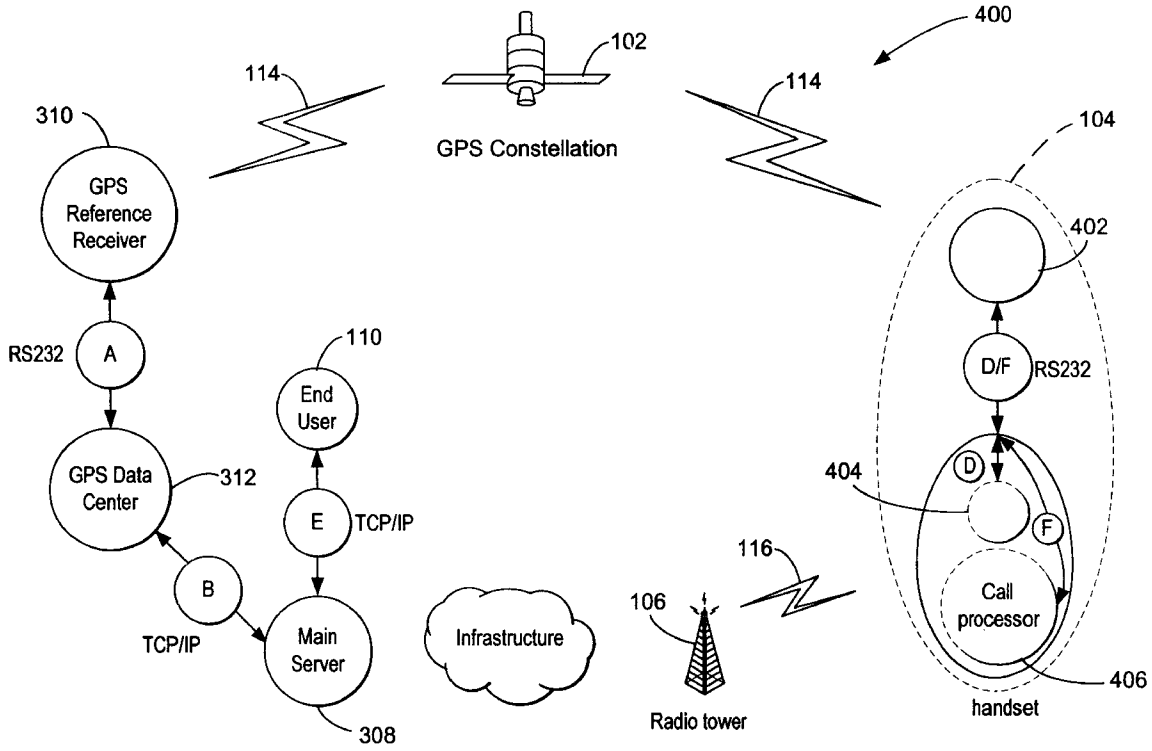

BMW EXHIBIT 1007

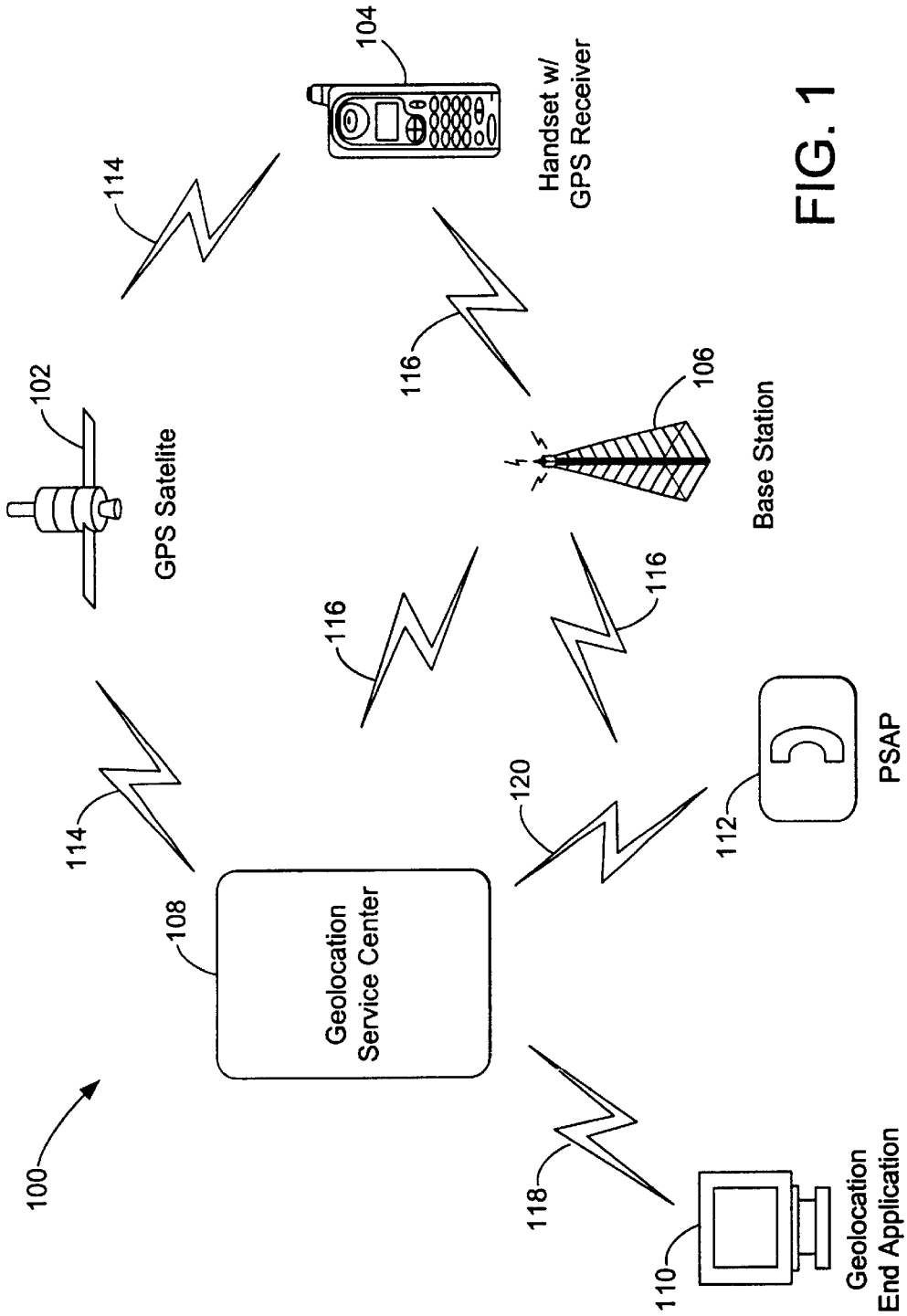
100
102
GPS Satelite
104
Handset w/
GPS Receiver
106
Base Station
108
Geolocation
Service Center
110
Geolocation
End Application
112
PSAP
114
114
116
116
116
118
120

FIG. 1

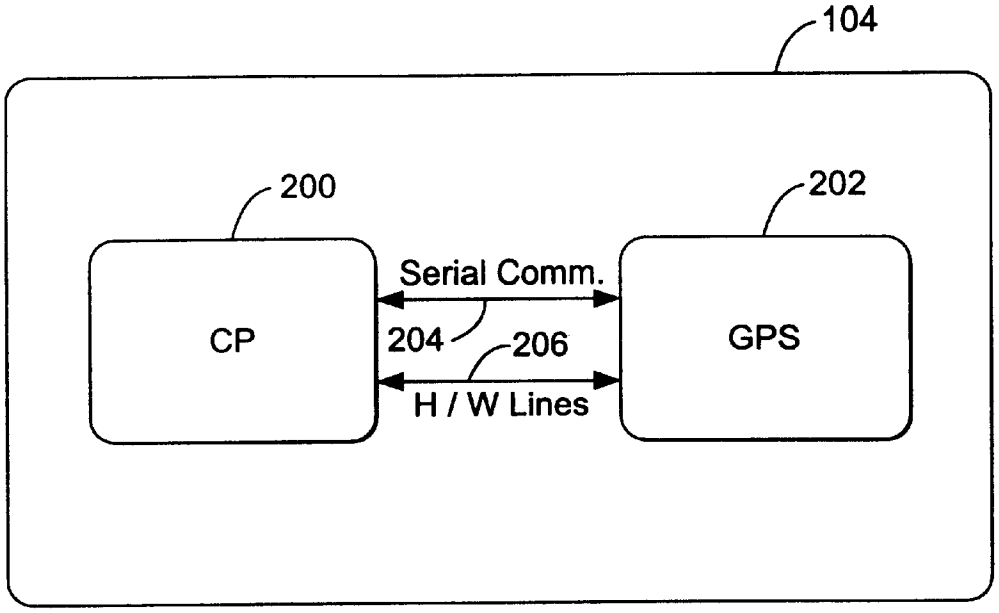

FIG. 2

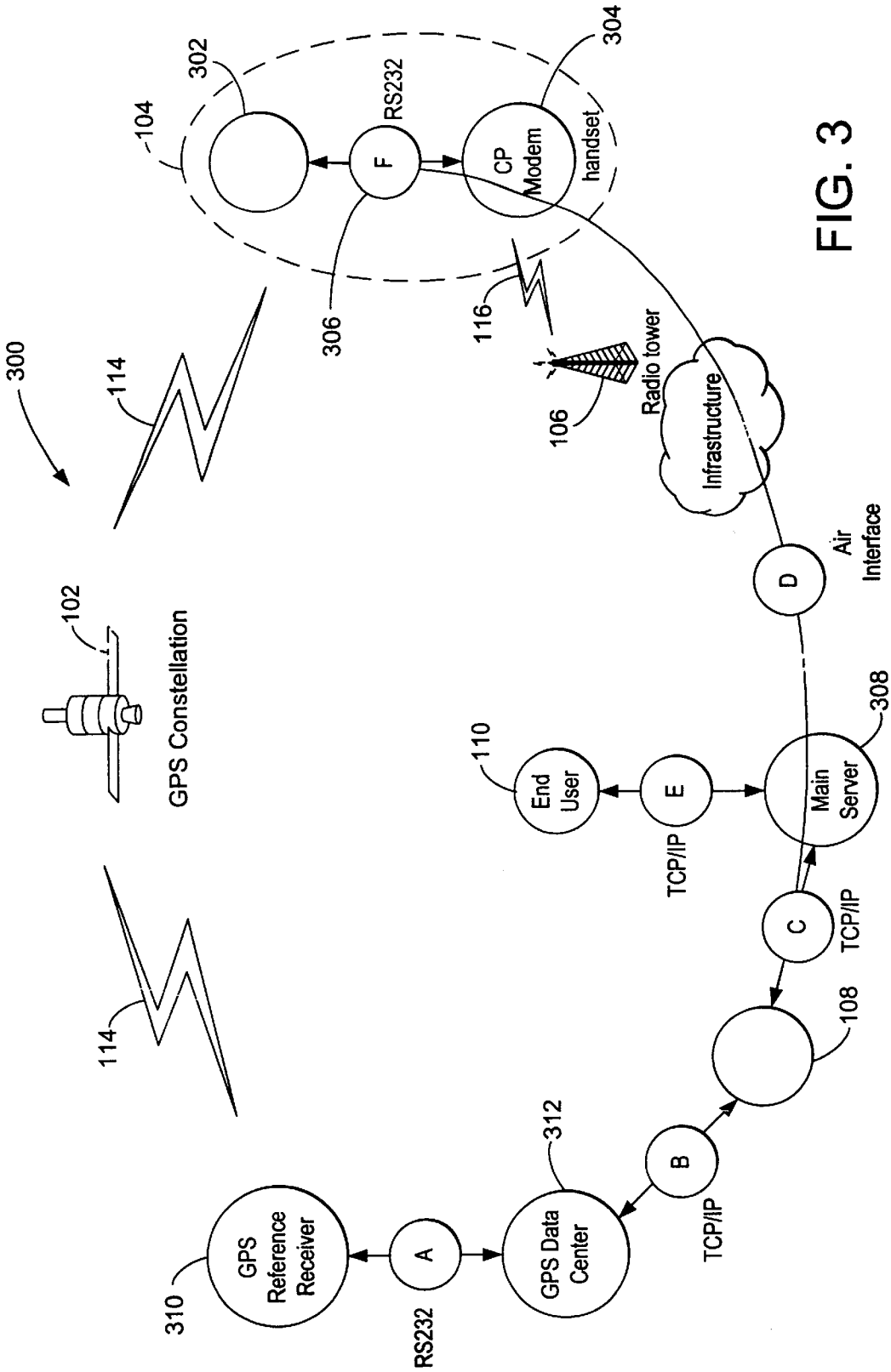
300
114
102
GPS Constellation
114
310
GPS Reference Receiver
RS232
A
GPS Data Center
312
B
TCP/IP
108
C
TCP/IP
Main Server
308
D
Air Interface
Infrastructure
Radio tower
106
116
306
F
RS232
CP Modem
handset
304
302
104
110
End User
E
TCP/IP

FIG. 3

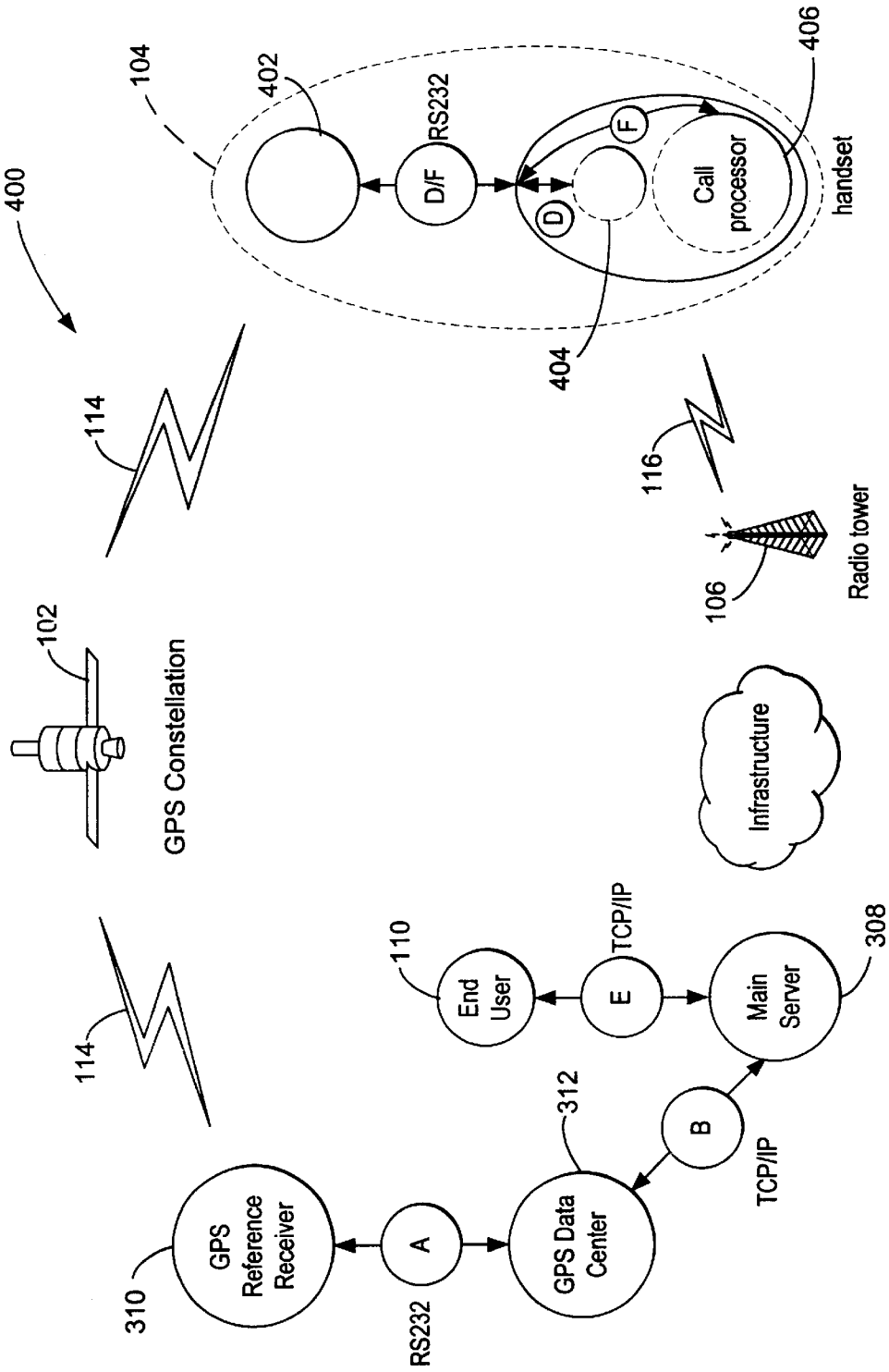
400
104
402
D/F
RS232
D
F
Call processor
handset
406
404
114
116
102
GPS Constellation
106
Radio tower
Infrastructure
114
110
End User
E
TCP/IP
Main Server
308
312
B
TCP/IP
310
GPS Reference Receiver
A
RS232
GPS Data Center

FIG. 4

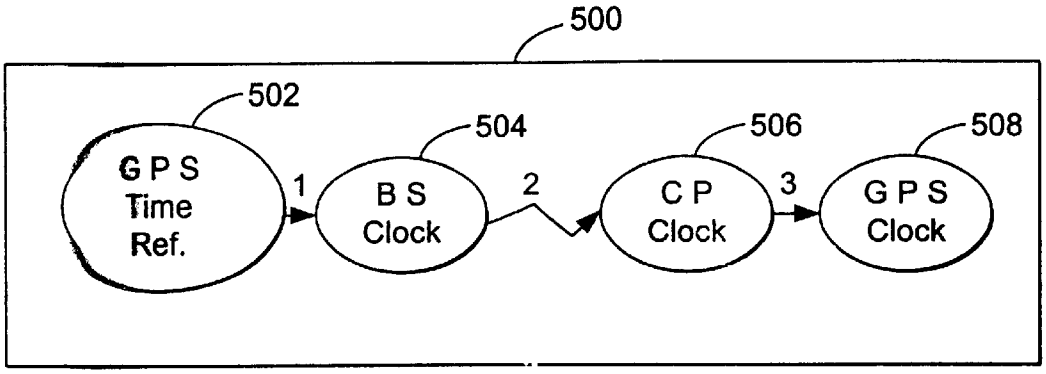
500
502
504
506
508
G P S
Time
Ref.
1
B S
Clock
2
C P
Clock
3
G P S
Clock

FIG. 5

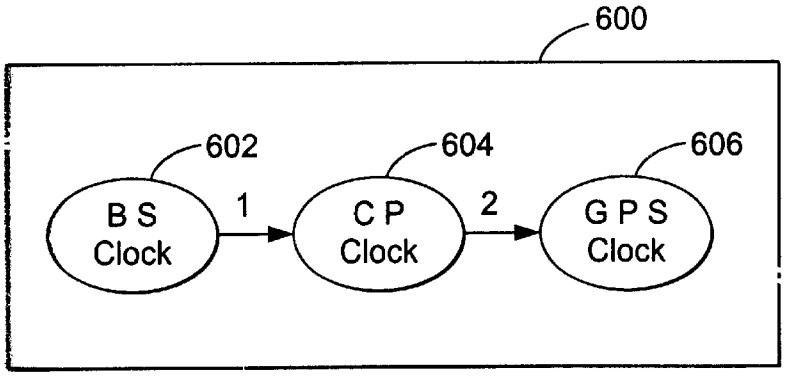
600
602
604
606
B S
Clock
1
C P
Clock
2
G P S
Clock

FIG. 6

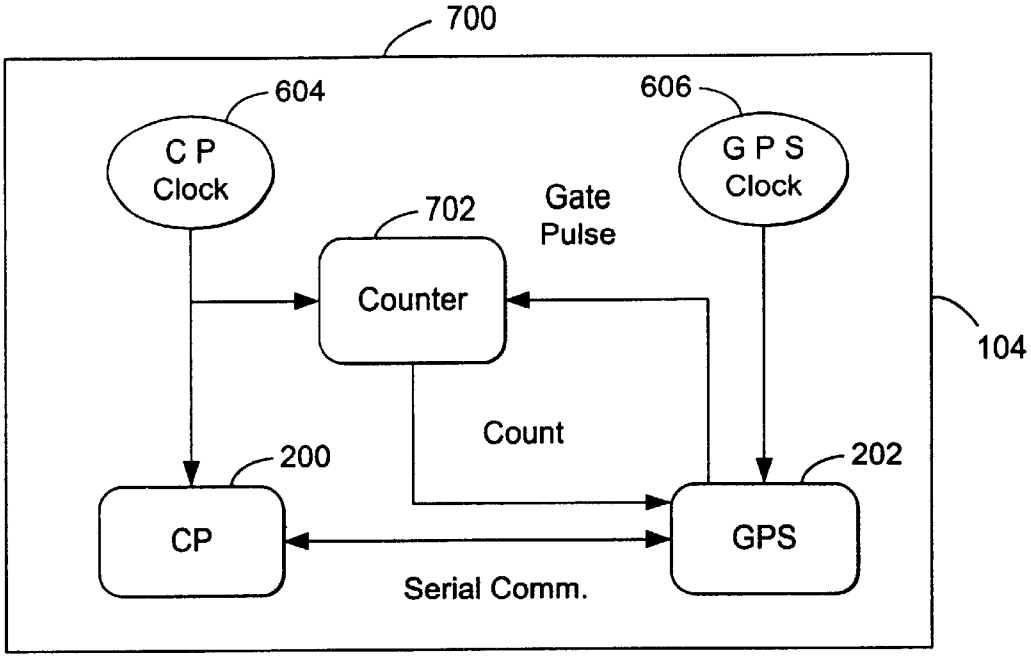
700
604
606
C P
Clock
G P S
Clock
702
Gate
Pulse
Counter
104
Count
200
202
CP
GPS
Serial Comm.

FIG. 7

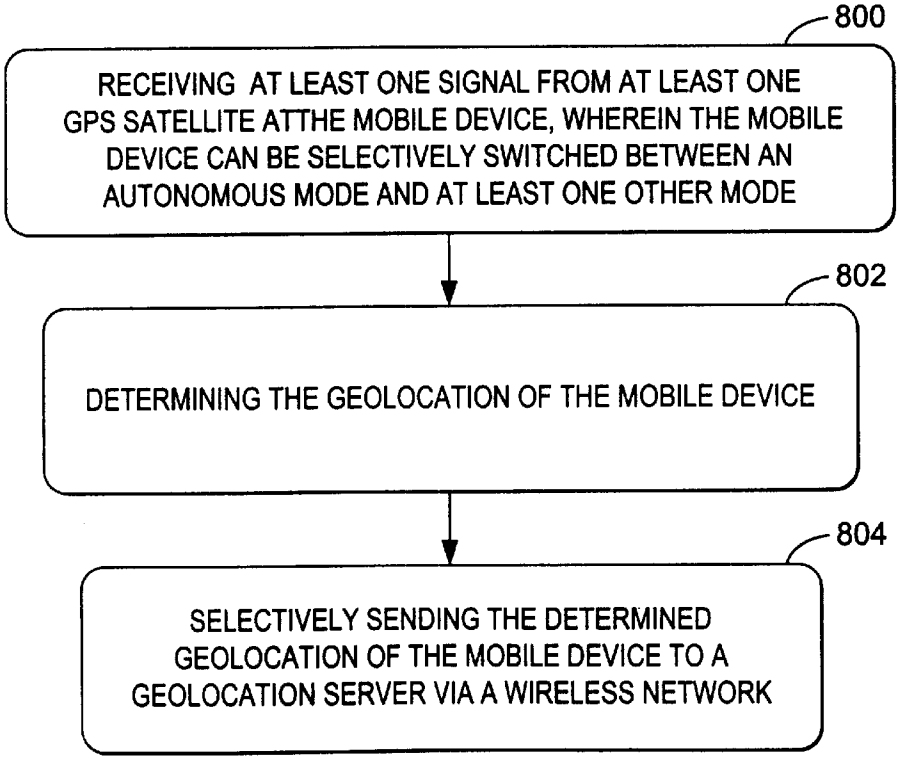
800
RECEIVING AT LEAST ONE SIGNAL FROM AT LEAST ONE GPS SATELLITE ATTHE MOBILE DEVICE, WHEREIN THE MOBILE DEVICE CAN BE SELECTIVELY SWITCHED BETWEEN AN AUTONOMOUS MODE AND AT LEAST ONE OTHER MODE
802
DETERMINING THE GEOLOCATION OF THE MOBILE DEVICE
804
SELECTIVELY SENDING THE DETERMINED GEOLOCATION OF THE MOBILE DEVICE TO A GEOLOCATION SERVER VIA A WIRELESS NETWORK

FIG. 8

INFORMATION TRANSFER IN A MULTI-MODE GLOBAL POSITIONING SYSTEM USED WITH WIRELESS NETWORKS

CROSS-REFERENCE TO RELATED APPLICATIONS

This application claims priority under 35 U.S.C. §119(e) of U.S. Provisional Patent Application No. 60/225,076, filed Aug. 14, 2000, entitled "MULTI-MODE GLOBAL POSITIONING SYSTEM FOR USE WITH WIRELESS NETWORKS" by Ashutosh Pande, et al., which application is incorporated by reference herein.

BACKGROUND OF THE INVENTION

1. Field of the Invention

The present invention relates in general to Global Satellite System (GSS) receivers, and in particular to multi-mode Global Positioning System (GPS) for use with wireless networks.

2. Description of the Related Art

Cellular telephony, including Personal Communication System (PCS) devices, has become commonplace. The use of such devices to provide voice, data, and other services, such as internet access, has provided many conveniences to cellular system users. Further, other wireless communications systems, such as two-way paging, trunked radio, Specialied Mobile Radio (SMR) that is used by police, fire, and paramedic departments, have also become essential for mobile communications.

A current thrust in the cellular and PCS arena is the integration of Global Positioning System (GPS) technology into cellular telephone devices and other wireless transceivers. For example, U.S. Pat. No. 5,874,914, issued to Krasner, which is incorporated by reference herein, describes a method wherein the basestation (also known as the Mobile Telephone Switching Office (MTSO)) transmits GPS satellite information, including Doppler information, to a remote unit using a cellular data link, and computing pseudoranges to the in-view satellites without receiving or using satellite ephemeris information.

This current interest in integrating GPS with cellular telephony stems from a new Federal Communications Commission (FCC) requirement that cellular telephones be locatable within 50 feet once an emergency call, such as a "911" call (also referred to as "Enhanced 911" or "E911") is placed by a given cellular telephone. Such position data assists police, paramedics, and other law enforcement and public service personnel, as well as other agencies that may need or have legal rights to determine the cellular telephone's position. Further, GPS data that is supplied to the mobile telephone can be used by the mobile telephone user for directions, latitude and longitude positions (locations or positions) of other locations or other mobile telephones that the cellular user is trying to locate, determination of relative location of the cellular user to other landmarks, directions for the cellular user via internet maps or other GPS mapping techniques, etc. Such data can be of use for other than E911 calls, and would be very useful for cellular and PCS subscribers.

The approach in Krasner, however, is limited by the number of data links that can be connected to a GPS-dedicated data supply warehouse. The system hardware would need to be upgraded to manage the additional requirements of delivering GPS information to each of the cellular or PCS users that are requesting or requiring GPS data, which requirements would be layered on top of the requirements to handle the normal voice and data traffic being managed and delivered by the wireless system.

Another patent that concerns assistance between the GPS system and wireless networks is U.S. Pat. No. 5,365,450, issued to Schuchman, et al. which is incorporated by reference herein. In the Schuchman reference, ephemeris aiding through the cellular telephone system is required for the GPS receiver to acquire and track GPS satellites. However, cellular and other wireless networks do not always have the capability to provide ephemeris aiding to the mobile GPS receiver.

It can be seen, then, that there is a need in the art for delivering GPS data to wireless communications systems, including cellular and PCS subscribers, in an efficient manner. It can also be seen that there is a need in the art for GPS capable cellular and PCS telephones. It can also be seen that there is a need in the art for GPS capable cellular and PCS telephones that can receive GPS satellite data for use by the cellular/PCS subscriber. It can also be seen that there is a need in the art for a large cellular system that can use and/or supply GPS information to cellular users for a number of applications, including E911 without the requirement of geographically proximate basestations.

SUMMARY OF THE INVENTION

To minimize the limitations in the prior art described above, and to minimize other limitations that will become apparent upon reading and understanding the present specification, the present invention discloses a system, device, and method for determining the position of a mobile device. The system comprises a geolocation server and a wireless communications device. The geolocation server receives at least one signal from at least one GPS satellite. The wireless communications device comprises a GPS receiver section, wherein the GPS receiver can be selectively switched between a standalone mode and at least one other mode for determining a geolocation of the wireless communications device. The wireless communication device can selectively send the determined geolocation of the wireless communication device to the geolocation server, and the wireless communications device periodically transmits a frequency reference message to the GPS receiver.

It is an object of the present invention to provide a method and a system for delivering GPS data to wireless communications systems, including cellular and PCS subscribers in an efficient manner. It is another object of the present invention to provide a method and a system that can manage GPS capable cellular and PCS telephones. It is another object of the present invention to provide a method and a system for GPS capable cellular and PCS telephones that can receive GPS satellite data for use by the cellular/PCS subscriber. It is a further object of the present invention to provide a method and a system for large cellular systems to use that can use and/or supply GPS information to cellular users for a number of applications, including E911.

BRIEF DESCRIPTION OF THE DRAWINGS

Referring now to the drawings in which like reference numbers represent corresponding parts throughout:

FIG. **1** illustrates a typical GPS architecture;

FIG. **2** shows the interface between the call processing section and the GPS section of the present invention;

FIG. **3** illustrates another implementation of an end-to-end system in accordance with the present invention;

FIG. **4** illustrates a thin server implementation of the present invention;

FIG. **5** illustrates time transfer between the GPS time reference and the GPS clock in accordance with the present invention;

FIG. **6** illustrates a frequency transfer block diagram in accordance with the present invention;

FIG. **7** illustrates a frequency transfer architecture in accordance with the present invention; and

FIG. **8** is a flowchart illustrating the steps used to practice the present invention.

DETAILED DESCRIPTION OF THE DRAWINGS

In the following description of the preferred embodiment, reference is made to the accompanying drawings which form a part hereof, and in which is shown by way of illustration a specific embodiment in which the invention may be practiced. It is to be understood that other embodiments may be utilized and structural changes may be made without departing from the scope of the present invention.

Overview

When integrating GPS components with wireless communications systems (which include cellular, paging, two-way paging, Personal Data Assistant, Bluetooth, and PCS systems), the GPS system must have the capability to acquire and track the GPS satellites under the conditions that the typical wireless communications system user will encounter. Some of those conditions, e.g., indoor use, dense urban areas use that has a limited sky view, such as in downtown areas with skyscrapers blocking satellite views, etc., although manageable for terrestrial-based wireless communications systems, are difficult situations for GPS systems. For example, traditional standalone mode GPS, e.g., where the GPS receiver acquires the signals from the GPS satellites, tracks the satellites, and, if desired, performs navigation without any outside information being delivered to the GPS system, has problems with long Time To First Fix (TTFF) times, and, further, has limited ability to acquire the GPS satellite signals under indoor or limited sky-view conditions. Even with some additional information, TTFF times can be over thirty seconds because ephemeris data must be acquired from the GPS system itself, and also requires a strong signal to acquire such information reliably. These requirements of the GPS system have impacts on the reliability of position availability as well as power consumption in handheld wireless communications system devices.

To overcome these problems, the present invention allows for multiple modes of operation depending on various factors. The GPS system of the present invention can be used in a standalone mode, for example, when the GPS receiver is receiving a strong signal, has recent ephemeris or almanac data, or when an exact position is not required. However, if the GPS system of the present invention is not receiving a strong enough GPS signal, e.g., the handheld wireless communication device is being used indoors, the GPS system of the present invention can switch to a different mode of operation, e.g., a mode of operation where the wireless communication system helps or "aids" the GPS system to acquire, track, and/or navigate using the GPS signals received by the GPS receiver and additional information supplied by the wireless communications system. This mode of operation is called a "network aided" mode. Further still, the GPS system of the present invention, when being used in an even harsher signal reception environment, can be completely dependent on the wireless communications system to provide position information to the GPS receiver or mobile handset, and the GPS system of the present invention would then operate in a wireless communications network provided or "network based" mode of operation. The GPS system of the present invention can switch between these modes of operation based on several variables, as well as user-selected preferences or demands, and can switch either via local or remote control, or via either automatic or manual commands given to the GPS system.

In addition, the multi-mode operation of the present invention allows for additional benefits to accrue to the integrated GPS/wireless communications system as described herein.

GPS Architecture

FIG. **1** illustrates a typical GPS architecture.

The wireless handset location technology of the present invention uses GPS technology in support of various wireless handset devices for the implementation of E911 and geo-location services. By taking the advantage of the low cost, low power, high performance and high accuracy GPS receivers enabled by the present invention, as well as the wireless network communication services, the wireless handset location technology of the present invention provides highly reliable and economical solutions to the Wireless Aided GPS.

The wireless handset location technology of the present invention supports all kinds of geolocation services, from fully standalone mode, network aided mode, to network based service mode, to other modes. The technology of the present invention also accommodates wide range of wireless communication platforms, including CDMA, TDMA, AMP, and even pager systems. FIG. **1** portrays the concept of wireless handset location technology.

System **100** illustrates a GPS satellite **102**, which is illustrative of the constellation of GPS satellites **102** that are in orbit, a wireless handset **104** that comprises a GPS receiver, a base station **106**, a geolocation (server) service center **108**, a geolocation end application **110**, and a Public Safety Answering Point (PSAP) **112**.

The GPS satellite **102** transmits spread spectrum signals **114** that are received at the wireless handset **104** and the geolocation server **108**. For ease of illustrative purposes, the other GPS satellites **102** are not shown, however, other GPS satellites **102** also are transmitting signals **114** that are received by the wireless handset **104** and the geolocation server **108**. If the wireless handset **104** can receive a strong enough signals **114**, the GPS receiver in the wireless handset **104** can compute the position of the wireless handset **114** as is typically done in the GPS system. However, wireless handsets are typically not able to receive strong enough signals **114**, or are not able to receive signals from enough GPS satellites **102** to autonomously compute the position of the wireless handset **104**, but can still communicate with base station **106**. Thus, base station **106** can communicate information via signals **116** to handset **104** to allow handset **104** to compute the location, or can communicate information from handset **104** to the geolocation server **108** to allow the geolocation server **108** to compute the position of the handset **104**. If the basestation **106** is transferring information to the handset **104** to allow the handset **104** to compute position, it is called "wireless-aided GPS," whereas when the basestation **106** transfers information from the handset **104** to the geolocation server **108** for the geolocation server **108** to compute the position of the handset **104** it is called "network-centric GPS."

Geolocation server also communicates with geolocation application **110** via signals **118** and with PSAP **112** via signals **120**. These signals **118** and **120** can either be via

wireless links or can be through the land line telephone network or other wire-based networks.

The wireless handset **104** location technology of the present invention comprises two major service systems: the wireless handset **104** with the GPS receiver of the present invention and the geo-location server **108** containing the geo-location software modules of the present invention. In addition, there are two types of supporting systems: the Base Station (BS) **106** infrastructure, which provides the network information transfer mechanism, and the PSAP **112** or the application **110** system, which can initiate the geo-location network services.

The handset **104** comprises a typical wireless handset **104** section that performs the call-processing (CP) function, and a GPS section for position computation, pseudorange measurement, and other GPS functions performed at the handset **104** of the present invention. A serial communication link, or other communications link, performs the communications between the CP section and the GPS section. A collection of hardware lines is utilized to transmit signals between the CP and GPS section.

FIG. **2** shows a typical interface between the Call Processing section and the GPS section of the present invention.

As shown in FIG. **2**, handset **104** comprises a Call Processing (CP) section **200** and a Global Positioning System (GPS) section **202**. Within handset **104**, or, alternatively, between handset **104** and an external accessory to handset **104**, communications between CP section **200** and GPS section **202** take place. These communications allow signals to be transferred from CP section **200** to GPS section **202**, and typically take place on a serial communications link **204** and hardware lines **206**, but other connections can be used if desired.

For example, in another implementation, the CP section **200** and the GPS section **202** can share the same digital processor and other circuitry. In such a case, the communication between sections can be made by inter-task communication, and certain data transfers, such as any time or frequency transfers between the CP section **200** and the GPS section **202**, would not use hardware lines **206**, but would be internal to the circuitry or, potentially, no transfer would be required depending on the circuit design.

FIG. **3** illustrates another implementation of an end-to-end system of the present invention.

System **300** shows signals **114** that are received at handset **104**, which comprises a GPS receiver client **302** and a CP section **304**, connected by, typically, an RS232 data link **306**. The CP section communicates with base station **106**, which communicates with a main server **308** via the cellular and/or cellular/land-based telephone network. The main server **308** communicates with the geolocation server **108** and the application **110** via land-based or wireless networks, typically using TCP/IP protocols.

The GPS signals **114** are also received by a series of reference receivers **310** which compute the position of the reference receivers and extract data from the GPS signals **114**. The extracted data, e.g., time, Doppler, frequency, etc. is sent to a GPS data center **312**, for all of the satellites in the GPS constellation **102**. When needed, the geolocation server **108** extracts data from the data center **312** for use by the handset **104**, and transmits the needed or requested data from the handset **104** or the application **110**. The main server can also interface to the PSAP **112** if desired, and the main server **308** and the geolocation server **108** can be co-located if desired or necessary.

Depending on the wireless network being used, e.g., cellular, PCS, two-way paging, Specialized Mobile Radio (SMR), Short Messaging Service (SMS), etc. the physical implementation of the present invention may vary from that shown in the figures. The figures are used for illustrative purposes only, and are not meant to limit the application of the present invention to other wireless systems. Further, the present invention can be used with hardwired systems, e.g., the landline telephone system, local area networks, etc., without departing from the scope of the present invention.

FIG. **4** illustrates another embodiment of the present invention.

System **400** illustrates GPS constellation **102** transmitting signals **114** that are received by handset **104**. Handset **104** comprises GPS receiver **402**, also called the client **402**, a server **404**, and a CP section **406**. In system **400**, server **404** is known as a "thin server," since it will not have the same capabilities of server **108** described in FIG. **3**. System **400** uses GPS reference receiver **310** to also receive signals **114** from GPS constellation **102**, and stores the GPS data in data center **312**. This information is transmitted to main server **308** when requested by application **110**, or by handset **104**, which uses server **404** to transmit the data back and forth between the CP section **406** and client **402**. System **400** allows for some aiding data, e.g., ephemeris, to be stored in the cellular handset at the server **404**, and then provided to the GPS client **402** on demand.

Multi-Mode GPS Operation with Wireless Networks

As described above, the system of the present invention can be operated in different modes depending on a number of variables, e.g., signal strength, operator intervention, type of services desired or requested, performance expectation, e.g., TTFF of a few seconds vs. tens of seconds, etc. The operation of each mode is described herein below.

Standalone Mode

In standalone mode, the GPS receiver **202** located in the mobile communications device (also known as a handset **104** or PDA) operates independently from the wireless communications network. The GPS receiver **202** acquires GPS satellite **102** signals **114**, and uses those signals **114** to determine the location of the GPS receiver **202**. The GPS receiver **202** also uses GPS satellite **102** signals **114** for tracking, and, if desired, navigation functions. The determined position is used internally to the mobile communications device **104**.

Autonomous Mode

In autonomous mode, the position of the handset **104** is computed in a similar manner as in Standalone Mode, e.g., by the GPS receiver **202** in handset **104** without any assistance from the cellular or other communications network. However, instead of using the determined position internally to the handset **104**, in autonomous mode, the handset **104** transmits the determined position of the handset **104** back to the communications network, e.g., to the geolocation server **108**, to application **110**, to PSAP **112**, etc., through the wireless communications network.

Network-Aided Mode

A different mode of operation can be implemented such that the GPS receiver uses the wireless communications network to deliver some of the position information to the GPS receiver to "aid" the GPS receiver in the acquisition, tracking, and navigation functions. Such information comprises almanac or sub-almanac information, coarse position information, Doppler data, in-view satellite positions, time and frequency aid, received wireless radio signal strength (to obtain by analogy an idea of what to expect for the GPS signal strength), or other aids that will aid the GPS receiver in acquiring the information that the GPS receiver needs to acquire, navigate, or track. Such situations can occur when

the GPS receiver has a limited view of the sky, or cannot acquire enough GPS signals on it's own, because the GPS receiver is blocked or otherwise unable to acquire the GPS satellite signals, or cannot track the satellites because of multipath problems. Further, such situations may also be desired by the user conditioned upon a given event, e.g., an E911 call is placed from the mobile handset, the user wants a very short TTFF, the user may desire additional network information to be included in the GPS calculation for increased accuracy, or other reasons.

The Network Aided approach differs from the Network Centric (Also called the Network Assisted mode in other literature) approach because in the Network Aided approach, the GPS receiver could, eventually, obtain the position and tracking information needed to locate the GPS receiver by itself The Network Centric approach, as discussed in Krasner, cannot determine the position of the mobile receiver solely using the GPS information acquired from outside the wireless network, because the position calculation is done inside of the wireless network at the basestation, instead of in the mobile communications device as described in the present invention.

Further, the Network Aided approach, as described with respect to the present invention, allows for switching between standalone mode, autonomous mode, or other modes, once the initial acquisition has been made. The Network Aided mode and architecture of the present invention allows for the tracking, e.g., continuous update of user position to be done in Autonomous mode or standalone mode even in weak signal environments. The Network Assisted architecture of Krasner typically continues to depend on the network aid to calculate subsequent position.

The Network Aided mode is typically only used for acquisition of the GPS signal in weak signal environments. Once the GPS signal is acquired, the GPS receiver of the present invention can track the GPS signal without aid from the network. The Network Assisted mode of Krasner requires the network to assist the GPS receiver for tracking purposes as well as for acquisition.

Network Based Mode

A network based mode can also be used for situations when the GPS receiver cannot receive any GPS signals. As such, the GPS system is completely dependent on the wireless communications network to obtain any positioning information, and as such, is "centered" upon the information delivered by the wireless communications network. Typically, network-based modes compute position without using GPS or other satellite information. Positions of handsets **104** are derived from network resources, e.g., cellular transmitter towers and Time Difference Of Arrival (TDOA) techniques. When a handset **104** is in an area where it cannot receive GPS or other positioning system information to determine handset **104** position, such a mode can be useful.

Other Modes

The system of the present invention can, in Standalone, Autonomous, Network Aided, or Network Based modes, can also receive information from outside the wireless communications network as well as outside of the GPS satellite system. For example, in Autonomous mode or Standalone Mode, the GPS receiver can receive information from the GPS satellites and a Bluetooth network, while using the cellular wireless network to transmit voice or data. The GPS acquisition, tracking, and navigation functions can be enhanced with inputs from the Bluetooth network without using the cellular network. Similar scenarios can also be envisioned within the scope of the present invention that occur within the Network Aided or Network Based modes. Further, the present invention can operate in a Reverse Aiding (RA) mode which sends GPS information back to the wireless communications network for use within the wireless communications network

Further, the architecture and system of the present invention can be extended to wired networks such as the telephone network without departing from the scope of the present invention. For example, if GPS capabilities are present in a laptop or PDA and the device is connected to a wired or wireless Internet link, the GPS calculations can be aided via the Internet to calculate a position inside a building. The position can be displayed locally or sent to a server. Such a system can be used for security or other telephone or hardwired system applications.

The present invention can also be used for wireless Network monitoring, where the position information, alongside with the wireless signal strength, or any position-related information, can be collected from every user requesting assistance, at a central place in the network, to continuously monitor the cell coverage area, the amount of traffic within a single cell, where the traffic is concentrated, what are the areas of bad wireless reception, to help in the decisions of adding new base stations, or relocating them. The quality of service can be monitored in real-time by all the mobile systems used in the area.

Comparison of the Operation Modes

The operation modes of the present invention allow further flexibility within the GPS receiver framework. When the GPS receiver is not constrained by short TTFF requirements, or by network bandwidth, or by other signal demands, the GPS receiver of the present invention can be programmed to automatically select a given acquisition mode. For example, when the network traffic is heavy, which translates to a small bandwidth availability in the wireless communications network, the present invention allows the user to automatically or manually select the autonomous mode or standalone mode, which is not dependent on the wireless communications network for aiding information. In the same way, when the geolocation server **108** usage is heavy, and the aiding information latency time is incompatible with the requirements, the user can select, either automatically or manually, the autonomous or standalone mode. However, if additional bandwidth in the wireless network is available, or if the user needs a short TTFF for an E911 call, the present invention allows for manual or automatic override of the autonomous or standalone mode of operation into either autonomous or standalone (if ephemeris is current and there is implicit aiding information), the Network Based or network aided modes. Further, if the network is unable to deliver the reliability required, or the network does not have aiding capabilities, the GPS can use other modes or other sources of information to augment the autonomous or standalone mode, in an operational mode called "Augmented Autonomous Mode (AAM)." AAM can be used with Bluetooth, or other sensors such as pressure, accelerometers, or gyros to provide the GPS with aids outside of the network being used for communications. For example the present invention can use Bluetooth transmitters in every floor of a high rise sending its location and floor information to the phone and this 'augmented information' will be sent in case GPS cannot be acquired inside the building to deliver positioning data. Further, the present invention allows for the wireless communications device to switch from standalone mode to another mode, e.g., aided mode, network centric mode, etc., when a predetermined event occurs. Such a predetermined event may be the lapse of a predetermined amount of time without acquisition of a GPS satellite signal,

a predetermined number of seconds or minutes, etc., where the wireless communications device is unable to receive any GPS signals, power cycling of the device, etc.

The multimode architecture of the present invention allows for an automatic seamless and reliable response, by taking advantage of the network assists if and when available, and allows the system to operate independently if the assistance is not available or not available in a timely manner. The Network aided operational mode overcomes the start-up limitations of the autonomous or standalone GPS and allows same level of performance as the Network Based mode, but does not require continuous network connectivity after start-up. If the aiding data (ephemeris, approximate location, approximate time etc.) has been received by the cellular phone over some communication medium, the communication link could be off when the GPS is started. This is the store and forward method of having a thin server directly mounted on the wireless communications device. The seamless nature and flexibility of the architecture enables service providers to tune the system to meet their needs based on the capabilities of the network and the type of services desired.

Further, the selection of the operational mode can depend on the type of service or the accuracy that the user has requested or demanded from the system. For example, if the user places an E911 call, the GPS receiver can automatically be placed in the mode that will provide the most accurate position information in the most timely manner possible. That mode may be Network Based, but, if the network cannot supply a complete GPS information set such that the mobile GPS receiver can determine position calculation information, the receiver can switch to Network Aided, such that the processing capabilities of the network and the GPS receiver are being used in parallel. As another example, if a user is requesting directions to a specific location, the receiver can automatically select autonomous or standalone mode which will provide information in a timely manner, but not place such demands on the power supply and processing capabilities of the system. Further, the present invention allows the user to override the automatic choice of operational mode. The system can also switch between modes once a predetermined event, e.g., the first position calculation of the GPS receiver, is obtained. For example, if an E911 call is placed, the present invention may select Network Aided mode to get the position information to the handset as fast as possible. Once that information is delivered, and the first position is calculated, the present invention may switch to a different mode, such as autonomous mode or standalone mode to make additional bandwidth in the wireless communications network available to other users. The architecture of the present invention also allows for reception of aiding information and gives the user the choice to accept that the position be sent back to the network, or "locked" in the mobile system, available only to the user, if the user wants it for privacy reasons.

The architecture of the present invention also gives the user the choice of preventing the network connection for assistance, even when the GPS receiver has determined it is necessary to reach the user's requirements, in the case the network access is charged to the user on a per use basis. In such a circumstance, the GPS receiver will attempt to provide a position in standalone mode, but with no guarantee about fulfilling the original user's requirements. The present invention thus allows for the bandwidth of the wireless communications network to be managed such that the bandwidth can be used more efficiently. Further, the present invention allows for dynamic allocation of the network resources, including the processing available on the GPS receiver, to process as much information in parallel as possible. This allows for dynamic loading of the GPS client and network server processors to more efficiently calculate position for multiple users. This approach allows for an increased number of wireless communications system users without significantly affecting the infrastructure of the wireless communications system.

Multi Correlator Architecture

To assist the system of the present invention, multiple correlators can be used to provide the system with a shorter TTFF, a more accurate position, or a more reliable result with fewer transfers from Autonomous or Standalone Mode to the Network Aided mode or Network Based mode.

Distributed Smart Client/Server Architecture

By allowing the GPS receiver (also known as the client) and the wireless communications system (also called the server) to distribute the workload of acquisition, tracking, and navigation tasks in an intelligent manner, the present invention allows for faster acquisition, faster TTFF times, and allows parts of the GPS receiver system to be powered down or selectively powered to reduce power consumption of the GPS portion of the mobile device.

The architecture of the present invention also allows for advance qualification of ephemeris data, e.g., validation of stored ephemeris data quality, by using the network aided mode to verify that the stored ephemeris data at the GPS receiver is still valid. Similarly, the Network Aided mode allows the present invention to derive coarse location data to be used for a Coarse Location Acquisition scenario, where a timetag approximate position based on known ephemeris or almanacs and post processing of the data is used for actual location determination.

The Other (Augmented Autonomous) Mode also allows for the use of low power short range wireless technology, such as Bluetooth, to aid the GPS receiver in reducing Time To First Fix (TTFF) times, as well as using low power short range wireless technology to aid GPS receiver with approximate location.

The present invention also allows correction information to be sent to the GPS system via the wireless communications network, by switching between the Autonomous or Standalone and Network Aided modes, or by remaining in the Network Aided mode, for slow changing errors to obtain precise local position, e.g., Iono correction factors, new sub-almanac information, etc. The present invention also can allow for data "fusion" from various sources, e.g., accelerometer, pressure sensors, tilt meters, etc. also present on the wireless communications device to add to the accuracy of the position determination, as well as providing the wireless communications device with approximate location, time, and frequency information to assist the wireless communications device in determination of a more precise position determination and/or improve the TTFF time for each client.

Reverse Aiding

The present invention also comprises an apparatus for sharing a common frequency reference between a location determination device and a wireless communication equipment, which can Reverse Aid (RA) the wireless communications system to steer or direct transmission beams to the wireless handset. This will allow additional frequency reuse or code reuse within a cell, since the wireless communications system can now used phased array technology to beam steer or beam form a shaped transmission beam that is centered upon each mobile user. This allows for lower transmitter power to be used from the basestation

transmitter, as well as lower power from the mobile user, because the formed or steered beam typically has more gain than an omnidirectional beam pattern. This feature of the present invention helps to optimize the communications links and increase the capacity of wireless communications system basestations, which, in Code Division Multiple Access (CDMA) networks is very useful, since the capacity of CDMA networks are limited by the noise floor increase as more users are placed on the network, not by the code efficiency.

RA can also be used for accelerating the acquisition and code synchronization onto the wireless network by providing very accurate absolute time and frequency references. RA can also be used to help to determine when to switch to another base station by using the GPS position (GPS-aided base station hand-over).

RA can also be used from mobile to mobile, using the network only as communication medium, where a first mobile system gets an absolute time information, measures the difference between network time and GPS time, and sends back the information to the network. The next user requesting GPS aiding information will receive the GPS time versus network time difference, and will correct the network time of this information to get GPS time to help in its own GPS acquisition process.

In another embodiment, the network, receiving redundant time and/or frequency reference information from several users in the same area for different points in time, can model the network time offset and frequency drift, and predict its value in the future. This way, the network can provide timing assistace information to a new mobile, even after a period where no information is received from any mobile.

RA from user to user also applies to frequency transfer, where the frequency error measured between network frequency and GPS frequency in a mobile is sent back to the network, and sent back to a new user as part of the assistance information.

Direct GPS aiding from mobile to mobile without using the server can also be used without intervention of a server momentarily storing assistance information before retransmitting to the next user requiring aiding. A mobile having acquired a position, having valid ephemeris and possibly network time and frequency error versus GPS, can broadcast this information to any other mobile in the same vicinity via the basestation.

RA can also be used to correct multipath problems at the client, because the terrestrial based wireless communications network can assist in the modeling of the multipath and/or provide modeling tools to help correct the multipath reception problems at the client given the position of the client.

Further, the present invention allows RA to use velocity information from a GPS receiver to assist the wireless communication system in aligning the Phase Locked Loop (PLL) to address problems associated with user motion. In particular, it can increase the effective wireless cell radius by guiding the wireless tracking loops using the absolute user velocity information from GPS, and thus allow wireless operation at lower radio signal strengths.

Time and Frequency Aiding

Wireless network systems typically have high quality reference clocks, and some wireless network systems, such as CDMA, are synchronized on absolute GPS time. The present invention allows for the wireless network frequency reference to be transferred to the GPS section of the handset to estimate GPS clock frequency offset and significantly reduce the frequency uncertainty. The GPS time reference can also be transferred to the GPS section to the GPS clock time. The main purpose of time and frequency transfer is to reduce the uncertainties of receiver clock time and frequency, thus, to improve the TTFF. The time transfer can also contribute to improve the sensitivity.

Time Transfer

FIG. **5** illustrates a time transfer mechanism as used in conjunction with the present invention.

System **500** illustrates a typical wireless network systems synchronized on absolute GPS time, such as CDMA or GSM with Location Measurement Units (LMU). Typically, the GPS time reference **502** is transferred to the GPS section of the handset **104** to synchronize GPS clock time with GPS time. For the wireless handset location system of the present invention, the time transfer can be accomplished in three steps.

In the first step, the Base Station (BS) clock **504** can be synchronized to the GPS time reference **502**. The time accuracy at the BS clock **504** depends on the system configuration and can be in the range of 100 to 300 nanoseconds. This is a built-in feature of certain types of networks.

In the second step, the CP clock **506** is synchronized onto the BS clock **504** by timing the reception of one specific event in the master frame transmitted from the BS clock **504** to the CP clock **506**. The BS clock **504** transmits the master frame with the transmission time of the first bit predictable in absolute GPS time with an accuracy of 300 nanoseconds. The synchronization error between the BS clock **504** and the CP clock **506** is caused by the RF reference point in the BS clock **504** signal, group delay in the BS clock **504**, signal transmission time due to the distance between the handset **104** and the base station, the group delay in the CP section, and the handset **104** architecture.

As long as the handset **104** tracks the base station, the CP section of the handset **104** knows the absolute GPS time and can predict the associated accuracy of the GPS time at the handset **104**, measured and adjusted during product integration phase, not in real time. If the handset **104** loses track of the base station or the BS clock **504**, the CP clock **506** accuracy will degrade. The CP clock **506** performance degradation can be predicted based on the CP clock **506** frequency stability, which is normally represented by the Allan variance, and the age of the last tracking.

The wireless handset location system of the present invention is designed to be air-interface independent. As the handset **104** manufacturer has the knowledge of tracking conditions, the CP clock **504** frequency stability, and the air-interface performance, the handset **104** manufacturer can determine the preferred or best method to provide models and/or interfaces to the GPS clock **508** to transfer the absolute GPS time and the associated accuracy including all uncertainty effects.

In the third step, the GPS clock **508** asks the CP section clock **506** for a time transfer message via the communications link between the GPS section and the CP section. Typically, this time transfer request message contains no parameter.

The CP section **200** can react to such a message in several different ways. The CP section can generate a precise timing event and return a time transfer response message. The timing event is typically a single rectangular pulse, with either a rising edge active or falling edge active. The time transfer response message typically contains the time of the timing event in GPS week, seconds into the week, and time uncertainty in seconds. By timing the timing event using the GPS clock **508**, the GPS clock **508** is synchronized onto CP clock **506** time.

The CP section **200** can also send a "delta" message back to the GPS section. For example, the CP section **200** or GPS section **202** can monitor the CP clock **506** and GPS clock **508**. When a time transfer request is made, the CP section **200**, or the GPS section **202**, whichever section is monitoring the clocks, receives a GPS time **502**, a difference calculation is made between the GPS lock **508** and the GPS time **502**. This delta can then be used for GPS calculations and position determinations until a new time transfer is requested.

The timing information is typically required when the GPS section **202** begins a new search on a new GPS satellite **102**. The timing synchronization can be made only periodically at the request of the GPS section **202**. The effective time accuracy available for the search will be degraded over time since the last reference time and/or frequency was sent due to the quality of the GPS clock **508**; however, the approach described with respect to the present invention reduces or eliminates the need for locking the GPS clock **508** to the CP clock **506**, as well as having the CP clock **506** locked to the GPS time reference **502** via the BS clock **504**. The frequency stability of the GPS clock **508** represented by its Allan variance as well as the frequency stability over temperature will be utilized to predict the time uncertainty at the beginning of the GPS satellite **102** signal search. The present invention aides the handset **104** in correctly predicting the time degradation effects, to choose the time transfer periodicity, and to implement the time transfer since the control of the GPS clock **508** choice and when the next search is made is under the control of the system of the present invention.

Frequency Transfer

FIG. **6** illustrates frequency transfer as used in conjunction with the present invention.

Within a cellular telephone system, such as the CDMA system used in the United States, each Base Station (BS) **106** has a high quality reference clock. System **600** shows that the BS clock **600**, with an associated BS clock **600** frequency, can be transferred to the CP clock **602** and then to the GPS clock **604** as follows, to estimate the GPS clock **604** frequency offset as necessary.

Typically, the CP section **200** tracks the wireless network signals and measures the CP clock **604** frequency offset relative to the BS clock **602**. The CP clock **604** frequency uncertainty after this measurement is caused by BS dock **602** frequency offset, which is specified by the network standards, handset **104** tracking loop performance, CP clock **604** frequency stability, and handset **104** motion.

The CP section **200** then periodically transmits a frequency reference message to the GPS section **202**. This message typically contains the error in frequency between the CP clock **604** and the BS clock **602**. The frequency reference message is sent at a period determined by the handset capabilities, as well as the necessity of the updates based on the GPS clock **606** and/or CP clock **604** requirements. For example, if the GPS clock **606** and CP clock **604** are both high quality crystals, the update message may be sent less often than if the GPS clock and the CP clock are both low quality crystals, or in some cases only once. However, the periodicity of the frequency error update is selectable by the handset **104** manufacturer. Because the GPS clock **606** is compared to the CP clock **604** at its own rate as described below, any CP clock **604** vs. BS clock **602** drift between frequency reference messages will be added to the uncertainty of the GPS clock **606**. Another method for setting the CP clock **604** is to steer the CP clock **604** onto the received signals and synchronized onto BS clock **602**, which alleviates the need for a frequency reference message.

Other approaches, such as U.S. Pat. No. 5,841,396, issued to Krasner, which is incorporated by reference herein, describe a phase-locked loop approach to locking the GPS clock **606** to the CP clock **604**. The present invention avoids the additional circuitry and signal transfer between the CP section **200** and the GPS section **204** that is contemplated by such an approach, which makes the present invention easier and less expensive to implement in an existing cellular, wireless, or wired telephone system.

FIG. **7** illustrates the frequency transfer architecture used in conjunction with the present invention.

System **700** shows a system that can maintain the overall frequency error within limits imposed by the total frequency error budget without locking the GPS clock **606** to the CP clock **604**. Handset **104** manufacturers can design specific bounds of the message periodicity depending on the residual budgeted frequency error after adjusting the frequency and/or time using the reference message, and Allan variance characteristics of the CP clock **604**. The transmitted information is the relative frequency error, not the absolute error (in Hz), because the GPS section **202** does not know the absolute frequency of the CP clock **604**. The message that the GPS section **202** needs is independent from the nominal CP clock **604** frequency.

The GPS section **202**, and the GPS clock **606**, use the uncertainty information of the CP clock **604** frequency to optimize signal acquisition performance. Everything in the error budget, other than the handset **104** motion, depends on the wireless infrastructure and the CP section **200** architecture. The CP section **200** sends the GPS section **202** messages periodically, which messages contain CP clock **604** nominal frequency in Hz, e.g., the frequency of the divided CP clock **604** is sent to the counter **702** by the CP section **604** for measurement to convert absolute frequency error into a relative frequency error, CP clock **604** relative frequency offset vs. BS clock **602** frequency, and CP clock **604** frequency offset uncertainty.

The GPS section **202** then measures the relative frequency between the GPS clock **606** and the CP clock **604** using a counter **702**. The effective width of the counter gating signal is determined by counting a predetermined number of GPS clock **606** pulses. The number of CP clock **604** pulses during this gating signal is used to determine the relative frequency error between the GPS clock **606** and the CP clock **604**.

The frequency drift between transmission of the frequency reference information depends on the Allan variance of the GPS clock **606** and its stability over temperature. The periodicity of sending of the frequency reference information can be adjusted depending on maximum frequency error allocated to the GPS clock **606**, and quality of the GPS clock **606**. In an alternate embodiment, or for convenience of implementation, a frequency divider can be inserted between CP clock **604** and Counter **702**, thus reducing the absolute frequency to be measured by the counter.

Process Chart

FIG. **8** is a flowchart illustrating the steps used to practice the present invention.

Block **800** illustrates receiving at least one signal from at least one GPS satellite at the mobile device, wherein the mobile device can be selectively switched between a standalone mode and at least one other mode.

Block **802** illustrates periodically transmitting a frequency reference message to the device.

Block **804** illustrates determining the geolocation of the device using the at least one signal and the frequency reference message.

CONCLUSION

This concludes the description of the preferred embodiment of the invention. The following paragraphs describe

some alternative methods of accomplishing the same objects. The present invention, although described with respect to GPS systems, can be utilized with any Satellite Positioning System (SATPS) without departing from the scope of the present invention. Further, although described with respect to a cellular telephone system, other wireless or wire-based systems can be used in place of or in conjunction with the cellular system herein described without departing from the scope of the present invention. Other methods of frequency transfer and time transfer can be utilized without departing from the scope of the present invention.

In summary, the present invention discloses a system, device, and method for determining the position of a mobile device. The system comprises a geolocation server and a wireless communications device. The geolocation server receives at least one signal from at least one GPS satellite. The wireless communications device comprises a GPS receiver section, wherein the GPS receiver can be selectively switched between an autonomous mode or standalone mode and at least one other mode for determining a geolocation of the wireless communications device. The wireless communication device can selectively send the determined geolocation of the wireless communication device to the geolocation server, and the wireless communications device periodically transmits a frequency reference message to the GPS receiver.

The foregoing description of the preferred embodiment of the invention has been presented for the purposes of illustration and description. It is not intended to be exhaustive or to limit the invention to the precise form disclosed. Many modifications and variations are possible in light of the above teaching. It is intended that the scope of the invention not be limited by this detailed description, but rather by the claims appended hereto.

What is claimed is:

1. A geolocation system, comprising:

a geolocation server, wherein the geolocation server receives at least one signal from at least one GPS satellite; and

a wireless communications device, comprising a GPS receiver section, the GPS receiver being selectively switchable between a standalone mode and at least one other mode for determining a geolocation of the wireless communications device, wherein the at least one other mode is selected from a group comprising an autonomous mode, a network aided mode, a network centric mode, and a reverse aiding mode, and the wireless communication device can selectively send the determined geolocation of the wireless communication device to the geolocation server, wherein the wireless communications device periodically transmits a frequency reference message to the GPS receiver, wherein the frequency reference message comprises an error between a call processing clock and a base station clock, wherein a GPS clock in the GPS receiver is periodically compared to the call processing clock to determine a frequency offset of the GPS clock, and wherein the periodic transmission of the frequency reference message and the periodic comparison of the GPS clock to the call processing clock have the same period.

2. The geolocation system of claim **1**, wherein the GPS receiver switches between the standalone mode and the at least one other mode when a predetermined event occurs.

3. The geolocation system of claim **2**, wherein the predetermined event is initial acquisition of at least one GPS satellite signal.

4. The geolocation system of claim **3**, wherein the selective switching of the GPS receiver switches the receiver from the at least one other mode to standalone mode.

5. The geolocation system of claim **2**, wherein the selective switching of the GPS receiver switches the receiver from standalone mode to the at least one other mode.

6. The geolocation system of claim **5**, wherein the predetermined event is a lapse of a predetermined amount of time without acquiring at least one GPS satellite signal.

7. The geolocation system of claim **2**, wherein the wireless communications device can receive information from a second source, the second source selected from a group comprising a bluetooth network, a Specialized Mobile Radio network, a Personal Communication System (PCS) network, a wireless Local Area Network, an infrared network, a paging network, a two-way paging network, and an FM broadcast network.

8. The geolocation system of claim **1**, wherein the frequency reference message steers the call processing clock onto the base station clock, and the frequency reference message is only sent once to the wireless communications device.

9. The geolocation system of claim **8**, wherein a GPS clock in the GPS receiver is periodically compared to the call processing clock to determine a frequency offset of the GPS clock.

10. The geolocation system of claim **9**, wherein the GPS receiver switches between the standalone mode and the at least one other mode when a predetermined event occurs.

11. The geolocation system of claim **10**, wherein the predetermined event is initial acquisition of at least one GPS satellite signal.

12. The geolocation system of claim **11**, wherein the selective switching of the GPS receiver switches the receiver from the at least one other mode to standalone mode.

13. The geolocation system of claim **10**, wherein the selective switching of the GPS receiver switches the receiver from standalone mode to the at least one other mode.

14. The geolocation system of claim **13**, wherein the predetermined event is a lapse of a predetermined amount of time without acquiring at least one GPS satellite signal.

15. The geolocation system of claim **10**, wherein the wireless communications device can receive information from a second source, the second source selected from a group comprising a bluetooth network, a Specialized Mobile Radio network, a Personal Communication System (PCS) network, a wireless Local Area Network, an infrared network, a paging network, a two-way paging network, and an FM broadcast network.

* * * * *