US007822635B1

(12) **United States Patent**
Brown et al.

(10) **Patent No.: US 7,822,635 B1**
(45) **Date of Patent: Oct. 26, 2010**

(54) **MANAGING CONSUMER PREFERENCES WITH A PORTABLE DATA PROCESSING SYSTEM**

(75) Inventors: **Michael Wayne Brown**, Georgetown, TX (US); **Kelvin Roderick Lawrence**, Round Rock, TX (US); **Michael A. Paolini**, Round Rock, TX (US)

(73) Assignee: **International Business Machines Corporation**, Armonk, NY (US)

(*) Notice: Subject to any disclaimer, the term of this patent is extended or adjusted under 35 U.S.C. 154(b) by 1041 days.

(21) Appl. No.: **09/560,392**

(22) Filed: **Apr. 28, 2000**

(51) **Int. Cl.**
G06Q 30/00 (2006.01)
G07G 1/14 (2006.01)

(52) **U.S. Cl.** **705/14.1**; 705/14.4

(58) **Field of Classification Search** 705/26, 705/14.1, 14.4
See application file for complete search history.

(56) **References Cited**

U.S. PATENT DOCUMENTS

5,510,828	A	4/1996	Lutterbach et al.	
5,576,951	A *	11/1996	Lockwood	705/27
5,710,884	A	1/1998	Dedrick	
5,794,210	A *	8/1998	Goldhaber et al.	705/14
5,848,396	A *	12/1998	Gerace	705/10
5,890,149	A	3/1999	Schmonsees	
5,961,593	A	10/1999	Gabber et al.	
6,013,007	A	1/2000	Root et al.	
6,014,634	A	1/2000	Scroggie et al.	
6,055,513	A *	4/2000	Katz et al.	705/26
6,055,573	A *	4/2000	Gardenswartz et al.	709/224
6,128,663	A	10/2000	Thomas	
6,385,651	B2 *	5/2002	Dancs et al.	709/227
6,823,327	B1 *	11/2004	Klug et al.	707/1
6,915,271	B1 *	7/2005	Meyer et al.	705/14
2002/0023123	A1 *	2/2002	Madison	709/203
2002/0120629	A1 *	8/2002	Leonard	707/100
2003/0036949	A1 *	2/2003	Kaddeche et al.	705/14
2004/0102197	A1 *	5/2004	Dietz	455/456.1

FOREIGN PATENT DOCUMENTS

CA	2287094	A1 *	4/2000
KR	2001002032	A *	1/2001

OTHER PUBLICATIONS

eCommerce, Dec. 1, 1999 "Shopper's Eye: A Very Personal Shopper".

* cited by examiner

Primary Examiner—Arthur Duran
(74) *Attorney, Agent, or Firm*—Dillon & Yudell LLP

(57) **ABSTRACT**

In accordance with the method, system, and program of the present invention, consumer preferences designated for a user are transmitted in a transmittable data format from a portable data processing system associated with the user to multiple independent server systems each associated with a consumer provider from among multiple diverse consumer providers. Specialized services and products from each of the diverse consumer providers are designated for the user at each of the independent server systems, in response to comparing the consumer preferences for the user with a database of services and products at each of the independent server systems. The designated specialized services and products are transmitted to the portable data processing system in the transmittable data format, such that a consumer provider from among multiple diverse consumer providers adjusts offerings of services and products provided to a particular user via a portable data processing system according to electronically received consumer preferences for the particular user.

13 Claims, 6 Drawing Sheets

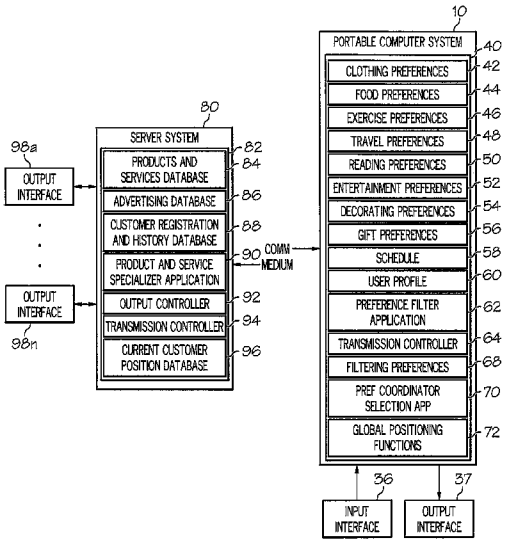

BMW EXHIBIT 1009

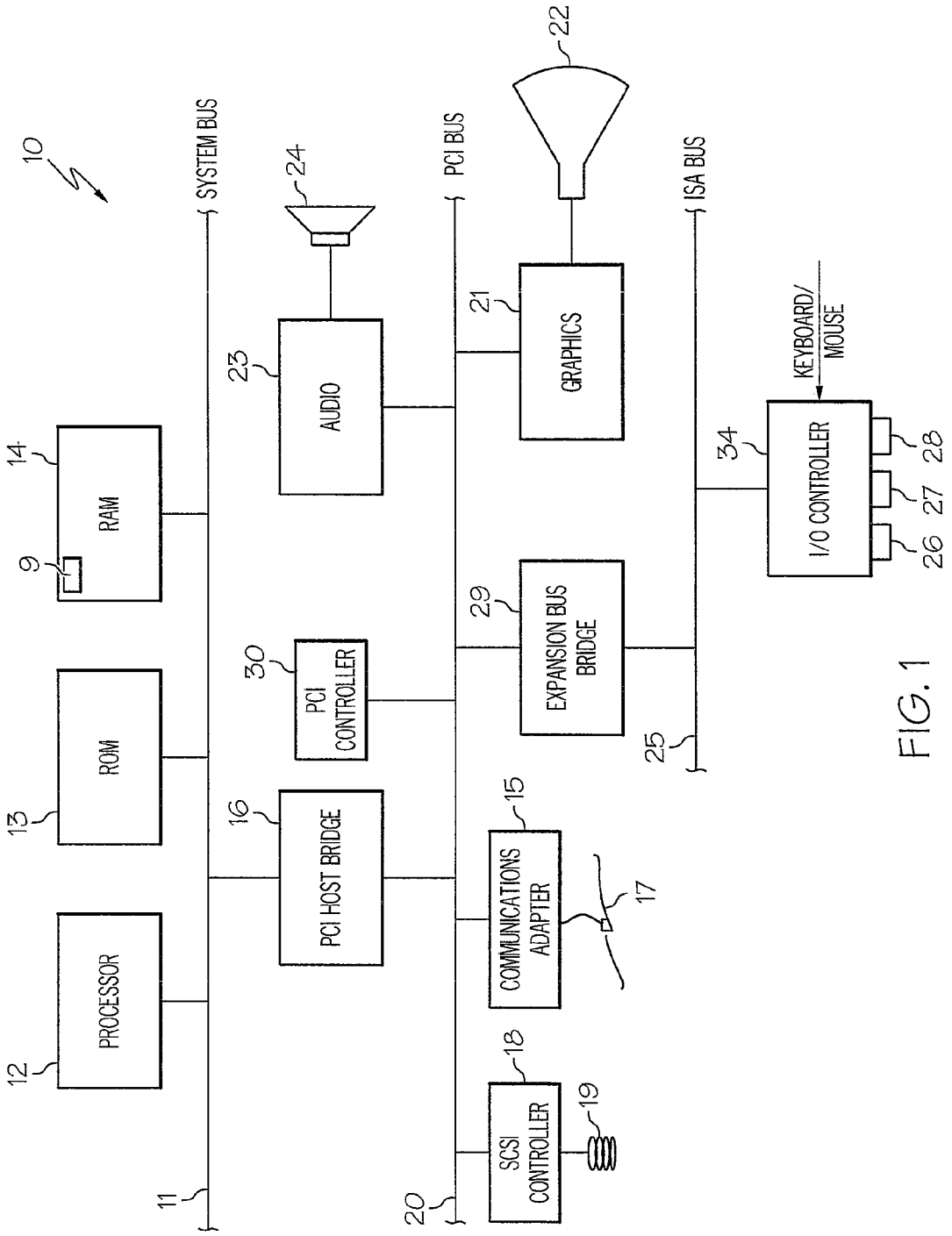
10
SYSTEM BUS
PCI BUS
ISA BUS
PROCESSOR
12
ROM
13
RAM
14
9
PCI HOST BRIDGE
16
PCI CONTROLLER
30
AUDIO
23
24
GRAPHICS
21
22
COMMUNICATIONS ADAPTER
15
17
SCSI CONTROLLER
18
19
EXPANSION BUS BRIDGE
29
I/O CONTROLLER
34
KEYBOARD/ MOUSE
26
27
28
11
20
25

FIG. 1

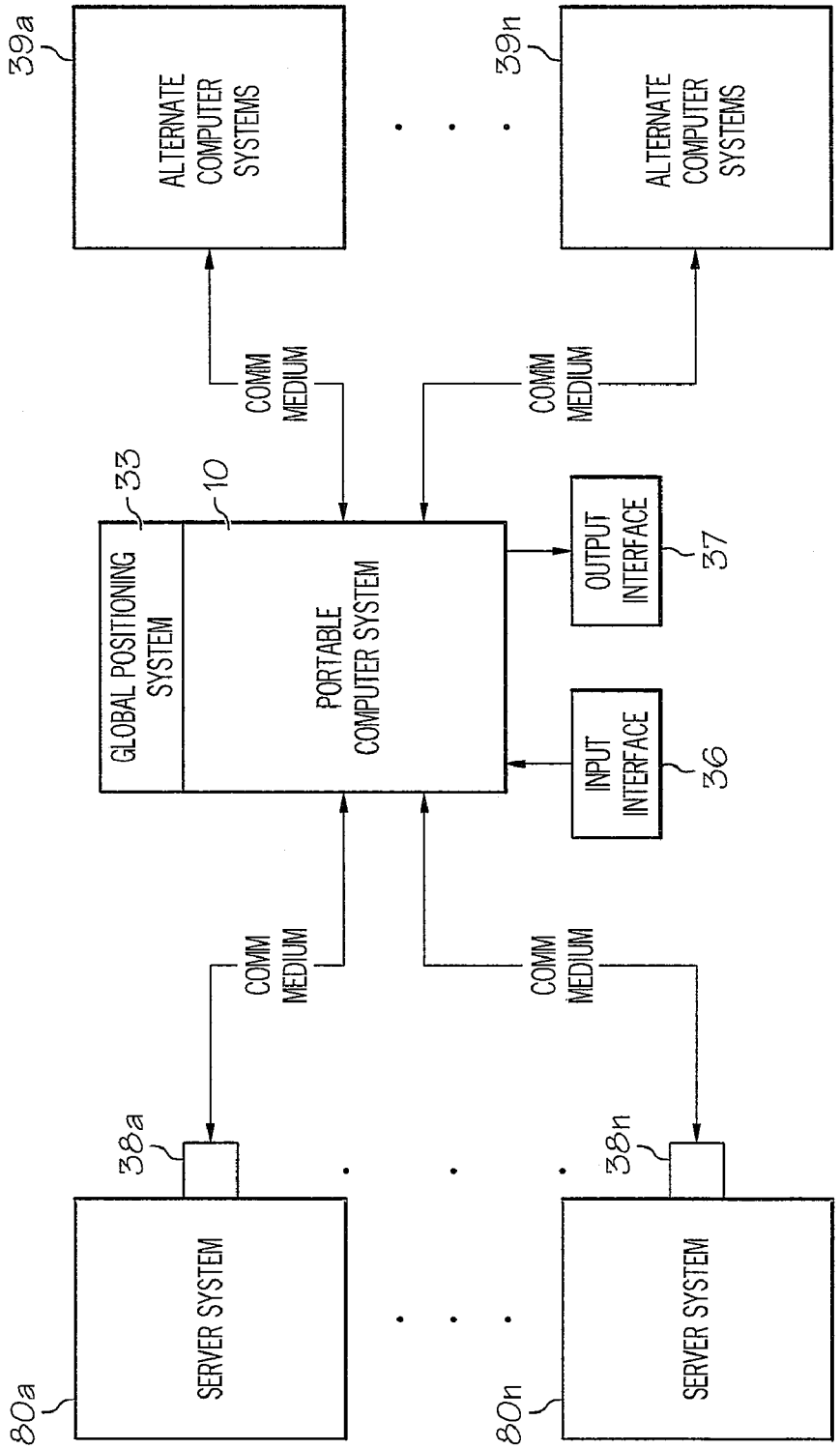
39a
ALTERNATE COMPUTER SYSTEMS
39n
ALTERNATE COMPUTER SYSTEMS
COMM MEDIUM
COMM MEDIUM
33
10
GLOBAL POSITIONING SYSTEM
PORTABLE COMPUTER SYSTEM
OUTPUT INTERFACE
37
INPUT INTERFACE
36
COMM MEDIUM
COMM MEDIUM
38a
38n
SERVER SYSTEM
SERVER SYSTEM
80a
80n

FIG. 2

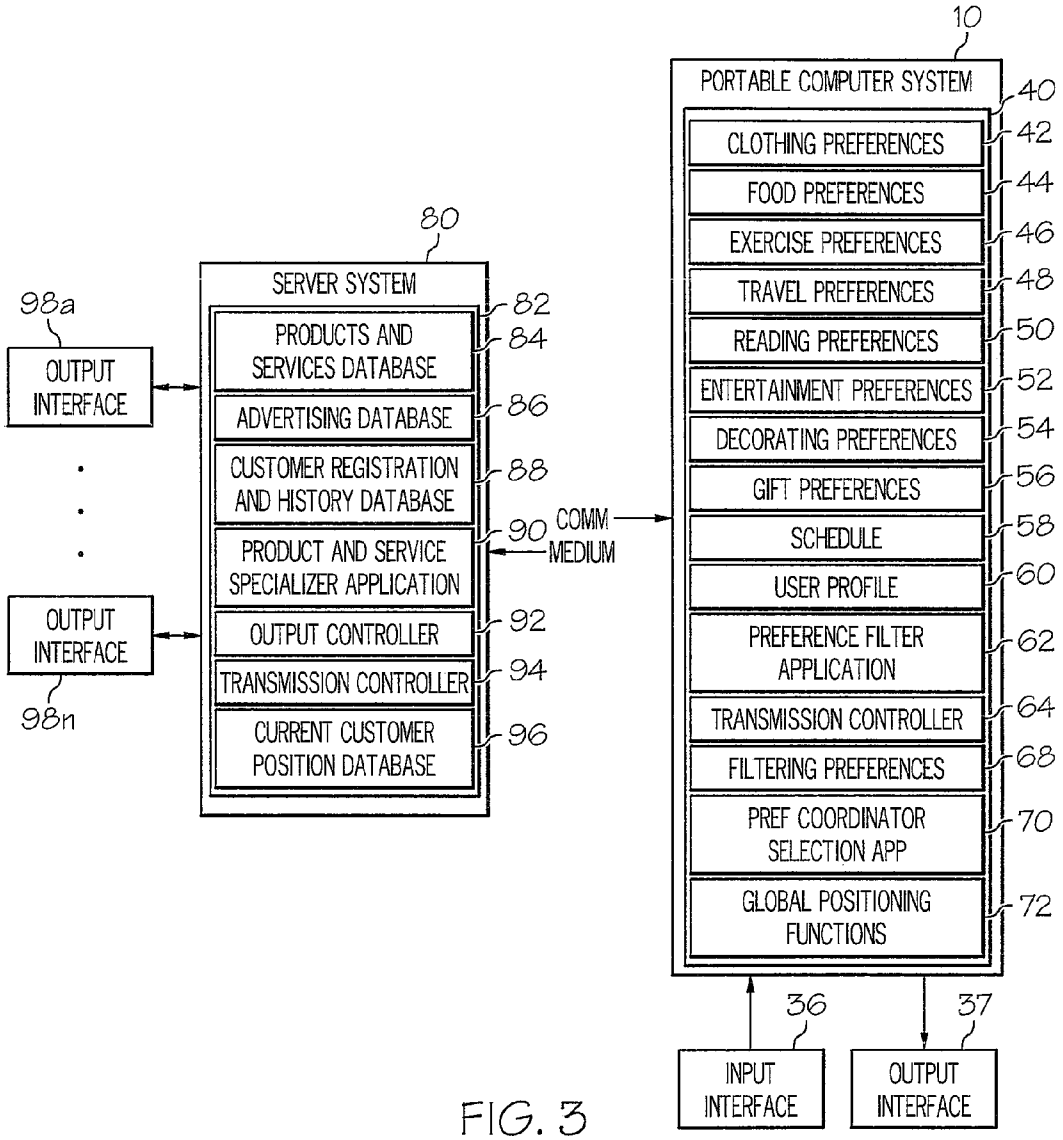
10
PORTABLE COMPUTER SYSTEM
40
CLOTHING PREFERENCES
42
FOOD PREFERENCES
44
EXERCISE PREFERENCES
46
TRAVEL PREFERENCES
48
READING PREFERENCES
50
ENTERTAINMENT PREFERENCES
52
DECORATING PREFERENCES
54
GIFT PREFERENCES
56
SCHEDULE
58
USER PROFILE
60
PREFERENCE FILTER APPLICATION
62
TRANSMISSION CONTROLLER
64
FILTERING PREFERENCES
68
PREF COORDINATOR SELECTION APP
70
GLOBAL POSITIONING FUNCTIONS
72
COMM MEDIUM
80
SERVER SYSTEM
82
PRODUCTS AND SERVICES DATABASE
84
ADVERTISING DATABASE
86
CUSTOMER REGISTRATION AND HISTORY DATABASE
88
PRODUCT AND SERVICE SPECIALIZER APPLICATION
90
OUTPUT CONTROLLER
92
TRANSMISSION CONTROLLER
94
CURRENT CUSTOMER POSITION DATABASE
96
98a
OUTPUT INTERFACE
OUTPUT INTERFACE
98n
36
INPUT INTERFACE
37
OUTPUT INTERFACE

FIG. 3

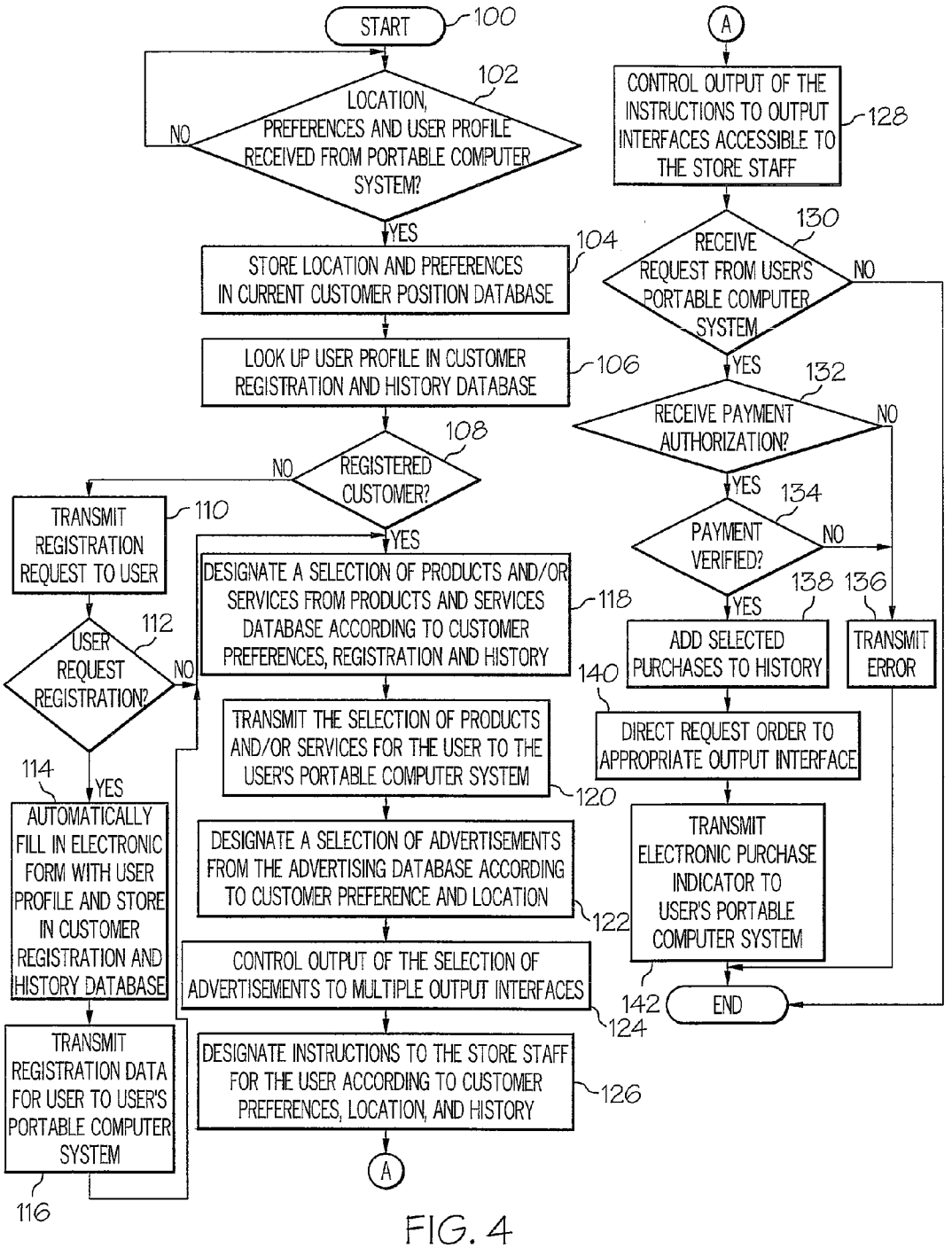
START
100
LOCATION, PREFERENCES AND USER PROFILE RECEIVED FROM PORTABLE COMPUTER SYSTEM?
102
NO
YES
STORE LOCATION AND PREFERENCES IN CURRENT CUSTOMER POSITION DATABASE
104
LOOK UP USER PROFILE IN CUSTOMER REGISTRATION AND HISTORY DATABASE
106
REGISTERED CUSTOMER?
108
NO
YES
TRANSMIT REGISTRATION REQUEST TO USER
110
USER REQUEST REGISTRATION?
112
NO
YES
AUTOMATICALLY FILL IN ELECTRONIC FORM WITH USER PROFILE AND STORE IN CUSTOMER REGISTRATION AND HISTORY DATABASE
114
TRANSMIT REGISTRATION DATA FOR USER TO USER'S PORTABLE COMPUTER SYSTEM
116
DESIGNATE A SELECTION OF PRODUCTS AND/OR SERVICES FROM PRODUCTS AND SERVICES DATABASE ACCORDING TO CUSTOMER PREFERENCES, REGISTRATION AND HISTORY
118
TRANSMIT THE SELECTION OF PRODUCTS AND/OR SERVICES FOR THE USER TO THE USER'S PORTABLE COMPUTER SYSTEM
120
DESIGNATE A SELECTION OF ADVERTISEMENTS FROM THE ADVERTISING DATABASE ACCORDING TO CUSTOMER PREFERENCE AND LOCATION
122
CONTROL OUTPUT OF THE SELECTION OF ADVERTISEMENTS TO MULTIPLE OUTPUT INTERFACES
124
DESIGNATE INSTRUCTIONS TO THE STORE STAFF FOR THE USER ACCORDING TO CUSTOMER PREFERENCES, LOCATION, AND HISTORY
126
A
A
CONTROL OUTPUT OF THE INSTRUCTIONS TO OUTPUT INTERFACES ACCESSIBLE TO THE STORE STAFF
128
RECEIVE REQUEST FROM USER'S PORTABLE COMPUTER SYSTEM
130
NO
YES
RECEIVE PAYMENT AUTHORIZATION?
132
NO
YES
PAYMENT VERIFIED?
134
NO
YES
ADD SELECTED PURCHASES TO HISTORY
138
TRANSMIT ERROR
136
DIRECT REQUEST ORDER TO APPROPRIATE OUTPUT INTERFACE
140
TRANSMIT ELECTRONIC PURCHASE INDICATOR TO USER'S PORTABLE COMPUTER SYSTEM
142
END

FIG. 4

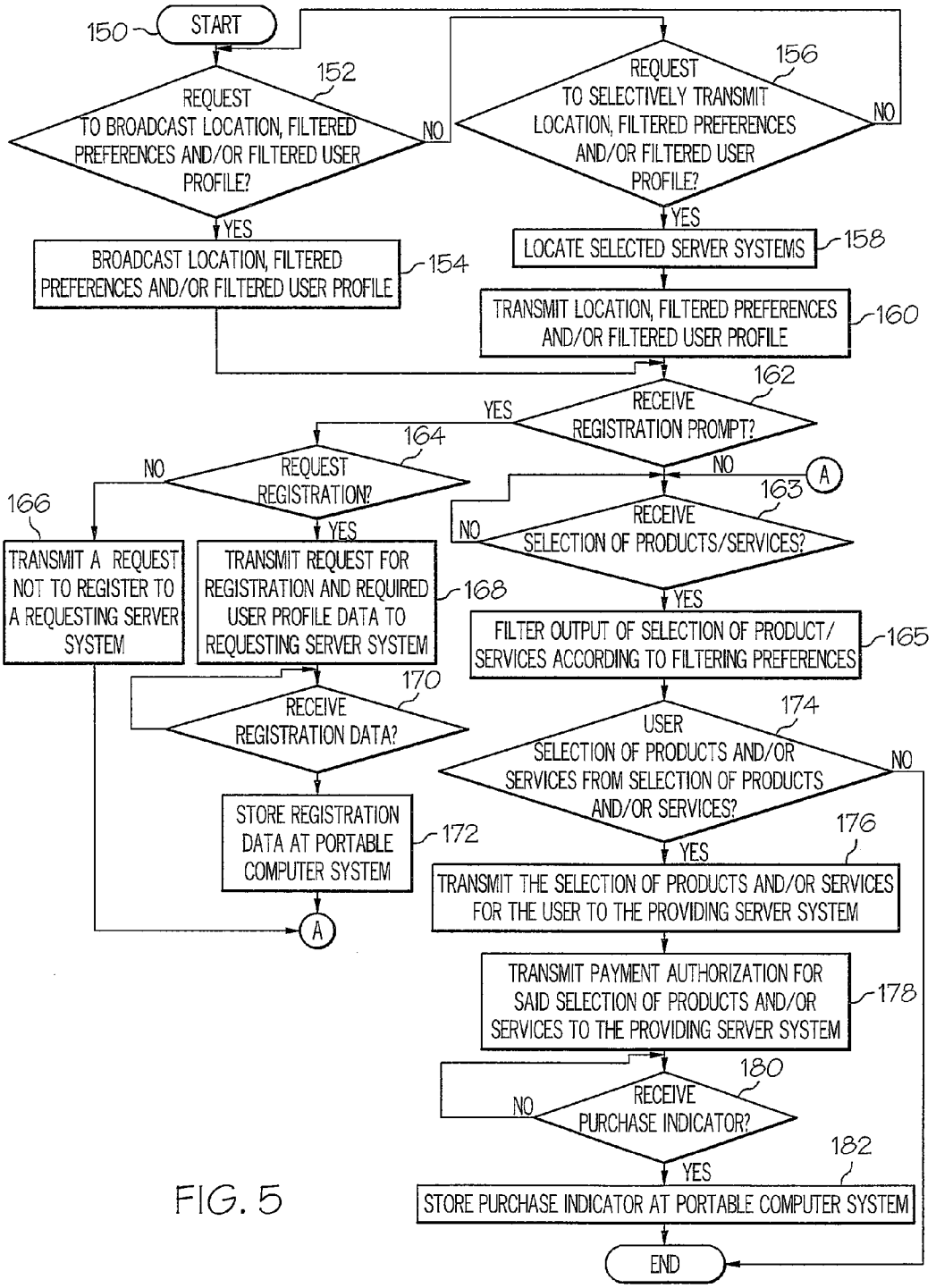
150
START
152
REQUEST TO BROADCAST LOCATION, FILTERED PREFERENCES AND/OR FILTERED USER PROFILE?
NO
YES
154
BROADCAST LOCATION, FILTERED PREFERENCES AND/OR FILTERED USER PROFILE
156
REQUEST TO SELECTIVELY TRANSMIT LOCATION, FILTERED PREFERENCES AND/OR FILTERED USER PROFILE?
NO
YES
158
LOCATE SELECTED SERVER SYSTEMS
160
TRANSMIT LOCATION, FILTERED PREFERENCES AND/OR FILTERED USER PROFILE
162
RECEIVE REGISTRATION PROMPT?
YES
NO
164
REQUEST REGISTRATION?
NO
YES
166
TRANSMIT A REQUEST NOT TO REGISTER TO A REQUESTING SERVER SYSTEM
168
TRANSMIT REQUEST FOR REGISTRATION AND REQUIRED USER PROFILE DATA TO REQUESTING SERVER SYSTEM
170
RECEIVE REGISTRATION DATA?
172
STORE REGISTRATION DATA AT PORTABLE COMPUTER SYSTEM
A
A
163
RECEIVE SELECTION OF PRODUCTS/SERVICES?
NO
YES
165
FILTER OUTPUT OF SELECTION OF PRODUCT/ SERVICES ACCORDING TO FILTERING PREFERENCES
174
USER SELECTION OF PRODUCTS AND/OR SERVICES FROM SELECTION OF PRODUCTS AND/OR SERVICES?
NO
YES
176
TRANSMIT THE SELECTION OF PRODUCTS AND/OR SERVICES FOR THE USER TO THE PROVIDING SERVER SYSTEM
178
TRANSMIT PAYMENT AUTHORIZATION FOR SAID SELECTION OF PRODUCTS AND/OR SERVICES TO THE PROVIDING SERVER SYSTEM
180
RECEIVE PURCHASE INDICATOR?
NO
YES
182
STORE PURCHASE INDICATOR AT PORTABLE COMPUTER SYSTEM
END

FIG. 5

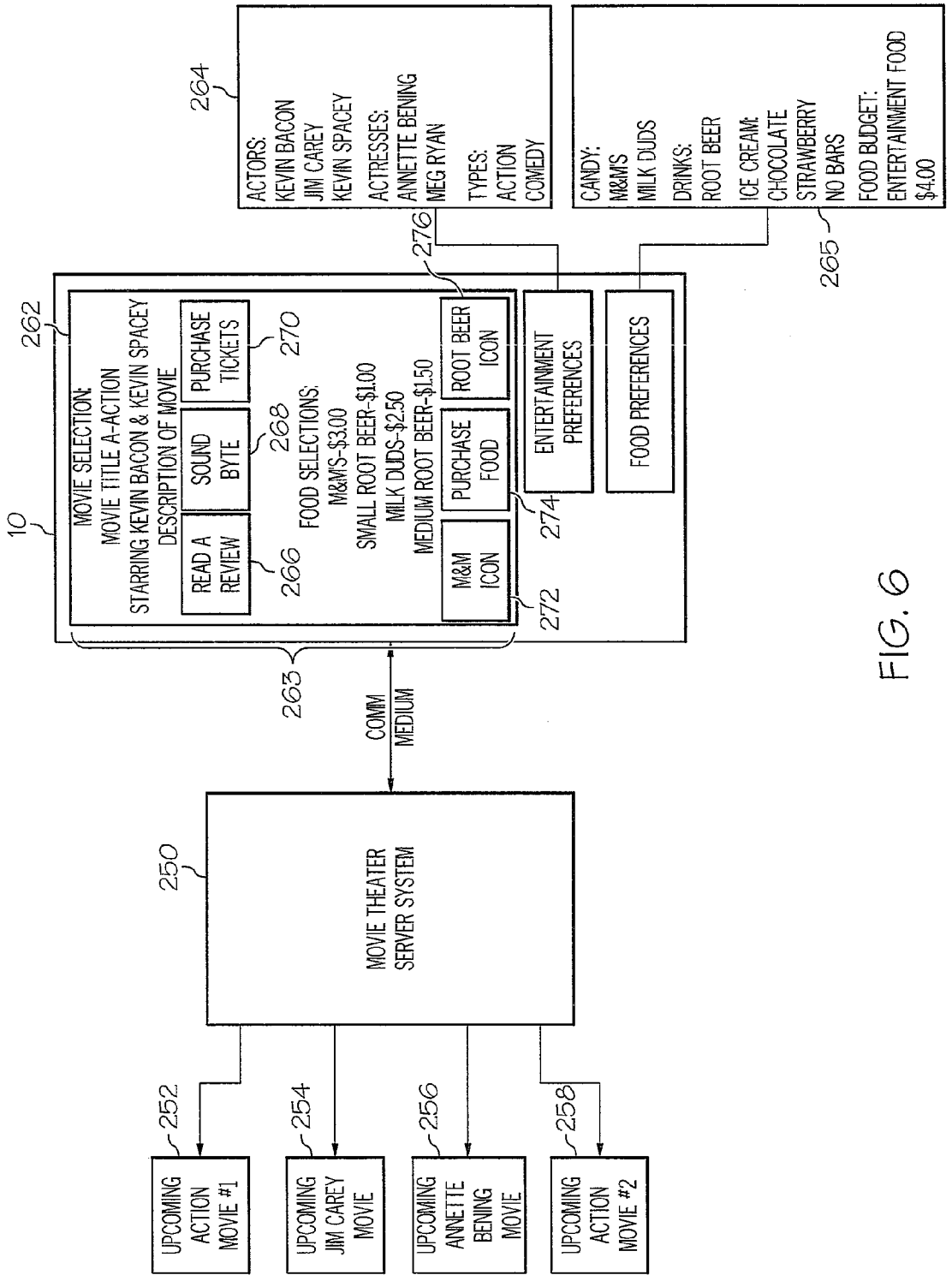
10
262
MOVIE SELECTION:
MOVIE TITLE A-ACTION
STARRING KEVIN BACON & KEVIN SPACEY
DESCRIPTION OF MOVIE
READ A REVIEW
SOUND BYTE
PURCHASE TICKETS
266
268
270
FOOD SELECTIONS:
M&M'S-$3.00
SMALL ROOT BEER-$1.00
MILK DUDS-$2.50
MEDIUM ROOT BEER-$1.50
M&M ICON
PURCHASE FOOD
ROOT BEER ICON
272
274
276
263
264
ACTORS:
KEVIN BACON
JIM CAREY
KEVIN SPACEY
ACTRESSES:
ANNETTE BENING
MEG RYAN
TYPES:
ACTION
COMEDY
265
CANDY:
M&MS
MILK DUDS
DRINKS:
ROOT BEER
ICE CREAM:
CHOCOLATE
STRAWBERRY
NO BARS
FOOD BUDGET:
ENTERTAINMENT FOOD
$4.00
ENTERTAINMENT PREFERENCES
FOOD PREFERENCES
COMM MEDIUM
250
MOVIE THEATER SERVER SYSTEM
252
254
256
258
UPCOMING ACTION MOVIE #1
UPCOMING JIM CAREY MOVIE
UPCOMING ANNETTE BENING MOVIE
UPCOMING ACTION MOVIE #2

FIG. 6

MANAGING CONSUMER PREFERENCES WITH A PORTABLE DATA PROCESSING SYSTEM

CROSS-REFERENCE TO RELATED APPLICATIONS

The present application is related to the following copending applications, which are filed on even date herewith and incorporated herein by reference:

(1) U.S. patent application Ser. No. 09/560,395; and

(2) U.S. patent application Ser. No. 09/560,629.

BACKGROUND OF THE INVENTION

1. Technical Field

The present invention relates in general to an electronic consumer preference manager and, in particular, to a method, system, and program for electronically managing consumer preferences for a user. Still more particularly, the present invention relates to a method, system and program for utilizing a single portable data processing system to manage transmission of consumer preferences for a user to multiple diverse retailer systems.

2. Description of the Related Art

As the tide is turning towards a paperless world, computers are becoming more prevalent in order to replace many functions previously performed utilizing paper. In particular, computing devices, such as personal digital assistants, laptop computers and cellular/digital telephones are becoming more commonplace as a personal, portable computer system. Such devices are typically designed to provide reliable and efficient transmittal and storage of data. For example, many digital telephones not only include capabilities to transmit and receive voice data, but to transmit and receive electronic data such as stock quotes, current weather and news. A small display device is typically provided to display the electronic data.

In the consumer world, web sites accessible via a personal computer are allowing services provided to consumers to become more customized. For example, a travel-related web site may provide for a user to enter travel preferences such that when fares that meet the travel preferences are available, the user is notified by electronic mail. In another example, a user may customize an opening web page, such as at yahoo.com, to include preferred types of news, stocks and weather when the user accesses the web page. However, while these web sites provide for user-customization, the user must typically re-enter preferences and personal information at each web site. For example, a user who registers at amazon.com must re-enter preferences and personal information to register at jcrew.com.

In addition, web sites which are accessible via a personal computer are providing bot services. A bot (short for robot) or agent is a program that performs a repetitive, time consuming task, such as searching Web sites and newsgroups for information and indexing the Web sites and newsgroup listings in a databases or an automatic record-keeping system. For example, a user may utilize a Web site offering a shop bot to search the web for the lowest price for a particular music compact disc (CD). The bot would return a listing of web sites selling the particular CD and the price offered by each site. A user is relieved of the task of going to each web site, searching for the CD and recording the price of the CD at that site. However, while bots provide for gathering consumer provider information in a time-efficient manner, typically bots do not provide for the web retailers to respond with additional specialized products and services according to customer preferences. In addition, in the example of the CD, if a user selects to purchase the CD from a particular site provided by the bot, the user must still enter preferences and personal information to register at the site to make the purchase.

Global positioning systems (GPS) add to the applications of personal, portable computer systems. In the consumer world, as personal computer systems include GPS and communication mediums to connect to a network, personal computer systems may receive regionalized advertising and sale updates. For example, a shopper's eye system, incorporating a personal digital assistant (PDA) equipped with a GPS and wireless Internet Protocol (IP), enables a two-way channel with a central control center through which retailers can present customized offers to nearby shoppers based on their particular interests. In particular, the location of a user, shopping goals, preferences and related history may be detected by a central control center for a mall the user has entered. This information is routed to stores in the mall and as the stores receive this information, they may create a customized offer of bundled goods and services. In addition, manufacturers of competing goods are notified and may respond with incentives to add to the offer. The offer is transmitted from the central control center to the user's PDA.

However, the shopper's eye system only provides for a user to receive electronic information at their PDA within a controlled network environment, such as a mall. In addition, the shopper's eye system does not provide for a user to selectively broadcast their preferences to particular stores within a mall or any other shopping environment. In addition, the shopper's eye system does not provide for adjusting both offers transmitted to a user's PDA and the service received by the user upon entering a store. Moreover, the shopper's eye system does not including filtering data at the PDA, such as the shopping preferences for the user, according to the retailer, in order to limit the type of data provided to a particular store or stores. Furthermore, the shopper's eye system does not provide for filtering offers received at the user's PDA to only certain types of offers and to protect against retailer spamming. In addition, the shopper's eye system does not provide for changing electronic advertising at the store or at an output interface accessible to the user according to the user's shopping preferences and location. Moreover, the shopper's eye system does not provide for linking a user's registration at a web site provided by the retailer with the store location provided by the same retailer.

In view of the foregoing, it would be preferable to provide a portable computer system as a personal preference manager that includes multiple types of preferences for a user that are filterable and exportable to multiple diverse retailers such that the retailers can personalize services and products provided to that user. It would be preferable for the retailer to personalize services provided both electronically and via employees to improve customer service. In addition, it would be preferable for a user to designate security criteria for the multiple types of preferences such that differing levels of preferences are transmitted to retailers according to criteria such as the type of retailer, reputation of a retailer, location of a retailer, etc. Moreover, it would be preferable to adjust advertising provided by retailers at display devices accessible to the user according to user preferences. In addition, it would be preferable to link Internet shopping and location shopping such

that a user can automatically register at a web site via a bot or via visiting the physical store location.

SUMMARY OF THE INVENTION

In view of the foregoing, it is therefore an object of the present invention to provide an improved electronic preference manager.

It is another object of the present invention to provide an improved method, system, and program for electronically managing consumer preferences for a user.

It is yet another object of the present invention to provide an improved method, system, and program for utilizing a single portable data processing system to manage transmission of consumer preferences for a user to multiple diverse retailer systems.

In accordance with the method, system, and program of the present invention, consumer preferences designated for a user are transmitted in a transmittable data format from a portable data processing system associated with the user to multiple independent server systems each associated with a consumer provider from among multiple diverse consumer providers, in response to detecting the physical presence of the portable data processing system associated with the user within a particular proximity of multiple venues associated with the diverse consumer providers. Specialized services and products from each of the diverse consumer providers may be designated for the user at each of the independent server systems, in response to comparing the consumer preferences for the user with a database of services and products at each of the independent server systems. The designated specialized services and products are transmitted to the portable data processing system in the transmittable data format, such that a consumer provider from among multiple diverse consumer providers adjusts services and products provided to a particular user via a portable data processing system according to electronically received consumer preferences for the particular user.

All objects, features, and advantages of the present invention will become apparent in the following detailed written description.

BRIEF DESCRIPTION OF THE DRAWINGS

The novel features believed characteristic of the invention are set forth in the appended claims. The invention itself however, as well as a preferred mode of use, further objects and advantages thereof, will best be understood by reference to the following detailed description of an illustrative embodiment when read in conjunction with the accompanying drawings, wherein:

FIG. **1** depicts an one embodiment of a data processing system with which the method, system and program of the present invention may advantageously be utilized;

FIG. **2** illustrates a high level block diagram of one embodiment of an electronic consumer preference management system in accordance with the method, system, and program of the present invention;

FIG. **3** depicts a detailed block diagram of one embodiment of an electronic consumer preference management system in accordance with the method, system, and program of the present invention;

FIG. **4** illustrates a high level logic flowchart of a process and program for controlling a retailer server system in accordance with the method, system, and program of the present invention;

FIG. **5** depicts a high level logic flowchart of a process and program for controlling a portable computer system in accordance with the method, system, and program of the present invention; and

FIG. **6** illustrates a pictorial diagram of multiple output interfaces controlled via a retailer server system in accordance with the method, system, and program of the present invention.

DETAILED DESCRIPTION OF PREFERRED EMBODIMENT

The present invention may be executed in a variety of systems, including a variety of computing systems and electronic devices under a number of different operating systems. In a preferred embodiment of the present invention, the computer system is a portable computing system such as a notebook computer, a palmtop computer, a personal digital assistant, a telephone or other electronic computing system that may also incorporate communications features that provides for telephony, enhanced telephony, messaging and information services. However, the computer system may also be, for example, a desktop computer, a network computer, a midrange computer or a mainframe computer. Preferably, in order to enable at least one of these communications features, the computer system is able to be connected to a network, such as the Internet by either a wired link or wireless link. In addition, the computer system may be a stand-alone system or part of a network such as a local-area network (LAN) or a wide-area network (WAN). Therefore, in general, the present invention is preferably executed in a computer system that performs computing tasks such as manipulating data in storage that is accessible to the computer system. In addition, the computer system includes at least one output device and at least one input device.

Referring now to the drawings and in particular to FIG. **1**, there is depicted a block diagram of one embodiment of a computer system that may utilize the present invention. As depicted, data processing system **10** includes at least one processor **12**, which is coupled to system bus **11**. Each processor **12** is a general-purpose processor, such as IBM's PowerPC™ processor that, during normal operation, processes data under the control of operating system and application software stored in random access memory (RAM) **14** and Read Only Memory (ROM) **13**. The operating system preferably provides a graphical user interface (GUI) to the user. Application software contains instructions that when executed on processor **12** carry out the operations depicted in the flowcharts of FIGS. **4**, **5** and others described herein.

Processors **12** are coupled via system bus **11** and Peripheral Component Interconnect (PCI) host bridge **16** to PCI local bus **20**. PCI host bridge **16** provides a low latency path through which processor **12** may directly access PCI devices mapped anywhere within bus memory and/or I/O address spaces. PCI host bridge **16** also provides a high bandwidth path for allowing PCI devices to directly access RAM **14**.

PCI local bus **20** interconnects a number of devices for communication under the control of PCI controller **30**. These devices include a Small Computer System Interface (SCSI) controller **18**, which provides an interface to SCSI hard disk **19**, and communications adapter(s) **15**, which interface data processing system **10** to at least one data communication network **17** comprising wired and/or wireless network communications. In addition, an audio adapter **23** is attached to PCI local bus **20** for controlling audio output through speaker **24**. A graphics adapter **21** is also attached to PCI local bus **20** for controlling visual output through display monitor **22**. In

alternate embodiments of the present invention, additional peripheral components may be added. For example, in alternate embodiments, a tactile display component may be provided.

PCI local bus **20** is further coupled to an Industry Standard Architecture (ISA) bus **25** by an expansion bus bridge **29**. As shown, ISA bus **25** has an attached I/O (Input/Output) controller **34** that interfaces data processing system **10** to peripheral input devices such as a keyboard and mouse (not illustrated) and supports external communication via parallel, serial and universal serial bus (USB) ports **26**, **27**, and **28**, respectively.

With reference now to FIG. **2**, there is illustrated a high level block diagram of an electronic consumer preference management system in accordance with the method, system, and program of the present invention. As depicted, portable computer system **10** communicates with multiple diverse server systems **80***a*-**80***n* via a bi-directional communications medium (or across a communication interface). In addition, portable computer system **10** communicates with multiple diverse computer systems **39***a*-**39***n* that include multiple diverse consumer preferences for multiple diverse individuals. The communications medium may include wired or wireless communications or other communications media that enables bi-directional transmission of data. Moreover, the communications medium may include a link to a network, such as the Internet, or a direct data link. Furthermore, data may be transmitted from server systems **80***a*-**80***n* to an electronic mail address that is accessible to portable computer system **10**.

In a wired embodiment of the communications medium, for example, server systems **80***a*-**80***n* and alternate computer systems **39***a*-**39***n* are connected to computer system **10** via parallel, serial, or USB ports, or the communication adapter as depicted in FIG. **1**. In a wireless embodiment of the communications medium, for example, server systems **80***a*-**80***n* and alternate computer systems **39***a*-**39***n* are wirelessly connected to computer system **10** via infrared, radio frequency (RF), cellular and other wireless transmissions which are detected by computer system **10**. Wireless transmissions between computer system **10** and server systems **80***a*-**80***n* and alternate computer systems **39***a*-**39***n* may occur passively or actively.

Data exchange across the communications medium is advantageously performed in at least one of multiple available data transmission protocols and is preferably supported by a common data structure format, such as the extensible mark-up language (XML) data structure format. Data transmission protocols may include, but are not limited to, Transmission Control Protocol (TCP), Internet Protocol (IP), Hypertext Transfer Protocol (HTTP), and Bluetooth. In addition, data may be transmitted in a secure manner via encryption or by technologies, such as secure socket layer (SSL) or virtual private networks (VPN).

An example of an XML data file that might be transmitted from server systems **80***a*-**80***n* to portable computer system **10**, as depicted below, preferably contains data that is distinguished by attributes on elements and may be wrappered within a larger element. For example, the data attributed to element "<TimeStamp></TimeStamp>" designates the time that the data was attributed to the XML data file.

<PROD/SERV TimeStamp="888965153" MachineID="77" LocationName="RetailerA-SouthAustin" UserID=>"JANEXYZ" UserAddress="163.342.5.6" SpecOffer="Red Jacket for $20 off" SpecOfferGraph="jacket.jpg" Clothing="Red Jacket" ClothCost="40.00" ClothSize="M" Footwear="Black Shoes" FootwearCost="30.00" FootwearSize="9" Service="Shoe Shine" ServiceCost="5.00/shoe">

A second example of the same data in an alternate XML data format this includes elements and attributes is illustrated below

<TimeStamp>888965153</TimeStamp>
<MachineID>77</MachineID>
<LocationName>RetailerA-SouthAustin</LocationName>
<UserID>JANEXYZ</UserID>
<UserAddress>163.342.5.6</UserAddress>
<SpecOffer>Red Jacket for $20 off</SpecOffer>
<SpecOfferGraph>jacket.jpg</SpecOfferGraph>
<Clothing>Red Jacket</Clothing>
<ClothCost>40.00</ClothCost>
<ClothSize>M</ClothSize>
<Footwear>Black Shoes</Footwear>
<FootwearCost>30.00</FootwearCost>
<FootwearSize>9</FootwearSize>
<Service>Shoe Shine</Service>
<ServiceCost>5.00/shoe</ServiceCost>

In the examples, as will be further described, consumer preferences for a particular user are preferably transmitted from computer system **10** to multiple diverse retailer server systems **80***a*-**80***n*. The multiple diverse retailer server systems **80***a*-**80***n* may compare the user's consumer preferences with products and/or services offered by the retailer and transmit a specialized offering of products and/or services to the user. The above described XML data file examples are intended as functional examples of XML data files of a specialized offering for a particular user that might be transmitted to the user's computer system **10** from a particular retailer server system. The elements, format of the elements and data included with the elements is provided to depict an example and is not intended to limit the types of elements, format of elements or data included with elements that are in an XML data file.

In particular, in the examples, a specialized product and service offering is designated for a user "JANEXYZ" by Retailer A's SouthAustin store from a server system with a machine ID of "77". The specialized product and service offering includes a special offer of $20 off a red jacket and includes a graphical image of the red jacket. In addition, the specialized offering includes a clothing product of a red jacket for $40.00 in a medium size. Advantageously, the size of the red jacket determined by the retailer in the product offer is the size that would most likely fit the user in view of the user's profile. In addition, the red jacket is advantageously within a particular price range, color, and/or style of jacket preferred by the user as indicated in the user's consumer preferences retrieved from computer system **10** or by a request from the user retrieved from computer system **10**. Moreover, the footwear offering of size 9 black shoes for $30.00 is preferably the size needed by the user and the black shoes are preferably within a particular price range, color and/or style preferred by the user as indicated in the user's consumer preferences retrieved from computer system **10**.

In addition, in the examples, a service offering of a shoe shine is provided for $5.00 per shoe. The offering of the shoe shine is preferably in response to a user request for a shoe shine service or an indicator in the user's consumer preferences that a shoe shine service is preferred as retrieved from computer system **10**.

In the example of the XML data format as the common transmittable data format, a data validation file such as a document type definition (DTD) or schema is preferably utilized to validate XML data files. In addition, a schema preferably translates multiple XML data files. Moreover, a style

sheet such as an extensible stylesheet language (XSL) file is preferably utilized to provide a style specification for the XML data at the receiving system. In particular, DTDs, schemas, and XSL files may be, for example, transmitted with an XML data file to a receiving system or downloaded at the receiving system from an alternate source. In the present example, the DTD or schema would verify that all the data required for a specialized product offering is included in the XML data file.

Portable computer system **10** may broadcast data in the common transmittable data format, including consumer preferences and a user profile, to server systems **80***a*-**80** and alternate computer systems **39***a*-**39***n* via a transceiver or other broadcasting medium. In broadcasting data, server systems **80***a*-**80***n* and alternate computer systems **39***a*-**39***n* may determine the location of portable computer system **10** according the data signal received at transmission receivers, such as transmission transceivers **38***a*-**38***n*.

In particular, according to the communication medium utilized, portable computer system **10** may be within a particular proximity of server systems **80***a*-**80***n* or may be remotely located to server systems **80***a*-**80***n*. For example, if the communication medium is a wireless Internet connection, server systems **80***a*-**80***n* may remotely receive a broadcast from portable computer system **10**. Alternatively, if the communication medium is an RF transmission, server systems **80**-**80***n* may receive a broadcast from portable computer system **10** when portable computer system **10** is within a particular proximity of transmission transceivers **38***a*-**38***n* of server systems **80***a*-**80***n*.

Transmission transceivers **38***a*-**38***n* may provide multiple ranges of reception of data transmissions from portable computer system **10** and may be locally or remotely accessible to server systems **80***a*-**80***n*. In addition, transmission transceivers **38***a*-**38***n* may provide multiple ranges of data transmissions from server systems **80***a*-**80***n*. In an example, a store in a mall in Texas may include transmission transceivers **38***a*-**38***n* that detect a data broadcast from portable computer system **10** when in a particular proximity of the store. The transmission transceivers **38***a*-**38***n* transmit the broadcast data to a remote server system in California. The remote server system determines a product and/or service offering and transmits the product and/or service offering back to transmission transceivers **38***a*-**38***n* that then transmit the offering to computer system **10**.

In addition, portable computer system **10** may selectively transmit data to server systems **80***a*-**80***n* and alternate computer systems **39***a*-**39***n*. In selectively transmitting data portable computer system **10** may, for example, direct data transmissions to a particular IP address or addresses, establish a secure connection with selected servers or encrypt broadcasted data utilizing an encryption technique, such as the double blind encryption technique. For example, portable computer system **10** for a user located in Texas may selectively transmit user preferences to a particular store server system via a wireless Internet connection where the server system is located in California.

Moreover, server systems **80***a*-**80***n* may broadcast data in a common transmittable data format whereby portable computer system **10** passively receives the data and then selects whether to transmit data in return. For example, as a user enters an airport, the airport server system is actively broadcasting data that is detected by computer system **10** within a particular proximity. In another example, as a user is walking through a mall, Internet addresses from various retailers within the mall may be broadcast from the retailers' server systems to portable computer system **10**.

Portable computer system **10** may include a global positioning system (GPS) **33** that passively receives the position of portable computer system **10**. Thereby, the location of portable computer system **10** as received at global positioning system **33** may be converted into the data transmission data format and transmitted with user preferences, for example, to server systems **80***a*-**80***n*.

In addition, portable computer system **10** preferably includes at least one input interface **36** and at least one output interface **37**. Input interface **36** may include multiple types of input interfaces including, but not limited to, a keyboard, a keypad, a vocal recognition device, a touchpad, a mouse, a tactile-detectable device, etc. Output interface **37** may include multiple types of output interfaces including, but not limited to, a graphical display monitor, a printer, a data storage medium, a audio speaker, etc. In particular, computer system **10** may control multiple output interfaces where different output interfaces have different audiences and purposes, as will be further described.

Server systems **80***a*-**80***n* advantageously represent diverse independent retailers or consumer providers that are enabled to independently gather data from portable computer system **10**. However, server systems **80***a*-**80***n* may also communicate with each other via a network connection, such as the Internet. Moreover, each of server systems **80***a*-**80***n* may include multiple servers connected via a network or data link with access to multiple data storage media.

Independent retailers or consumer providers associated with server systems **80***a*-**80***n* preferably include multiple types of diverse businesses that provide products and services to consumers. Included in the scope of consumer providers are non-profit organizations that may provide products and services for no charge and for profit organizations that provide products and services for a charge. In addition, included in the scope of consumer providers are individuals with expertise in a particular area or areas. For example, an attorney with expertise in intellectual property may be associated with server systems **80***a*-**80***n*.

Alternate computer systems **39***a*-**39***n* advantageously include user preferences for multiple alternate users that can be transmitted to portable computer system **10** in a common transmittable data format. In addition, user preferences stored at portable computer system **10** may be transmitted to alternate computer systems **39***a*-**39***n* in a common transmittable data format. In an example, a user at a meeting of colleagues may broadcast preferences to learn more about a new emerging technology from portable computer system **10**. Alternate computer system **39***a*-**39***n* of other colleagues at the meeting would receive the broadcast preferences, such that a colleague with expertise about the emerging technology may be located.

Referring now to FIG. **3**, there is depicted a block diagram of an electronic consumer preference management system in accordance with the method, system, and program of the present invention. Server system **80** preferably supports electronic business for a particular retailer or consumer provider. In the present example, server system **80** includes electronic business related data, services and applications stored in a data storage medium **82** including a products and services database **84**, an advertising database **86**, a customer registration and purchase history database **88**, a product and service specifier application (PSA) **90**, an output controller **92**, a transmission controller **94**, and a current customer database **96**. The databases are preferably data storage structures that hold multiple entries and may be searched and/or filtered according to particular criteria. In addition, the data stored in the databases is preferably easily convertable into an XML

data file and may be stored as such. In addition, in an alternate embodiment, alternate types of data may be stored in data storage medium **82**. Moreover, in an alternate embodiment, additional services and applications may be stored in data storage medium **82**.

Server system **80** controls exchange of data to and from multiple portable computer system such as portable computer system **10** via transmission controller **94**. In particular, transmission controller **94** establishes a connection via the communication medium with portable computer system **10** whereby the current location of portable computer system **10** and customer preferences and profile stored therein may be transmitted to server system **80**. The current customer location may be continuously updated in current customer database **96** if the customer chooses to continuously broadcast. In addition, transmission controller **94** preferably supports data exchange in a common transmission data format, and in particular in the XML data transmission data format.

Server system **80** also controls output of data to multiple diverse output interfaces **98***a*-**98***n* via output controller **92**. Output controller **92** may control transmission of data to multiple diverse output interfaces **98***a*-**98***n* via a wired or wireless communication medium. The diverse output interfaces may include, but are not limited to, output interfaces within a store for advertising, output interfaces within a store for displaying data to employees only, output interfaces within a shopping arena, and output interfaces along a roadside. Output interfaces **98***a*-**98***n* may include multiple diverse types of output devices including, but not limited to, flat-screen monitors, LCD graphical displays, electronic paper displays, electronic billboard displays, tactile-detectable displays, audio speakers, printers, and other forms of electronic media output devices.

Products and services database **84** preferable includes multiple diverse products and/or services provided by a retailer or consumer provider. The products and services may include, for example, multiple types of descriptors, prices and conditions. For example, a women's formal dress store may include a database of available dresses, with a description of the maker, dress style and color, pictures of the dress, sizes available and price. In addition, for each available dress, a list of the events for which the dress has already been purchased may be stored. In addition, the database may include service records such as schedules of consultants within the dress store and their availability for a consultation reservation. Moreover, the database may include a listing and pictures of an expected shipment of dresses that are viewable on the condition that a customer has made previous purchases at the store.

Advertising database **86** preferably includes multiple electronic advertisements including graphical rendering, audio and video. For example, the women's formal dress store may include a video commercial of a new line of dresses for petite women. In addition, the formal dress store may include graphical advertising for their consulting services including audio of the consultants describing their services. The electronic advertisements stored in advertising database **86** may be stored according to multiple searchable keywords. In addition, the advertisements stored in advertising database **86** may be stored in a compressed file that is transferable to portable computer system **10**.

Customer registration and history database **88** preferably includes registration data for multiple users and any purchase history as a registered customer. Advantageously, customer registration data is received from portable computer system **10** as consumer preferences and profile in an XML data format with a schema that is utilized for validating and translating the XML data file. In particular, the XML data and schema may be transmitted from portable computer system **10** at a store location or via the Internet to a retailer's web site. Server system **80** may fill in an electronic registration form for the user from the user profile XML data file as depicted below.

```
<TimeStamp>888965153</TimeStamp>
<UserID>JANEXYZ</UserID>
<Address>102 Pickwick</Address>
<City>Austin</City>
<State>Texas<State>
<ZipCode>78746</ZipCode>
<ClothingPref>assistant with dress shopping</ClothingPref>
<ClothingPref>emerald blue</ClothingPref>
```

The electronic form is filled in by matching elements from the XML data file depicted above with elements of the electronic registration form. For example, the elements of the electronic registration form at a particular server system may include <UserID>, <ZipCode> and <ClothingPref> where only those data elements are transferred from the XML data file into the electronic registration form. After registration, a registration indicator, such as a cookie, may be transmitted from the server system to portable computer system **10**.

The example of an XML data file comprising a user profile and consumer preferences as depicted above is intended as an example of elements that might be included in a user profile and consumer preferences. The customer registration may also include, but is not limited to including, personal data, shopping preferences, current products owned and current services utilized. In addition, for each customer purchase a history of the date, time, place, sales person, price paid, etc. associated with the purchase is preferably recorded in customer registration and history database **88**.

Advantageously, via the method, system, and program of the present invention, a user may be registered at a particular server system for a particular retailer and the data is preferably accessible via a network of servers at the web site for the retailer and at any of the store or service locations of the retailer. And, in particular, a user may be automatically registered at multiple diverse retailer server systems without the user being required to re-enter redundant data to each server system. Moreover, it is important to note that the user may be automatically registered at multiple diverse retailer server systems via transmittal of registration data from the user's personal portable computer system as they enter a store location or at an Internet web site location.

PSA **90** preferably analyzes a customer's preferences when the customer is detected locally or remotely. First, PSA **90** may determine an offering of selections of products and services from among products and services database **84** that meet the user's preferences as currently stored in current customer database **96**. In addition, the selection of products and services from among products and services database **84** may be further specified according to the user's purchase history. For example, if a customer at the women's formal dress shop typically purchases a necklace with each dress purchase, then necklace and dress pairings may be specified for the user. The selection of specified products and services may include photo, video and audio clippings in addition to descriptions and prices. Transmission controller **94** preferably controls secure transmission of the selection of specified products and services to the user's portable computer system **10**.

In one embodiment of the present invention, the offering of products and services may be transmitted to portable computer system **10** in the XML data format including a schema for defining the types of data and an XSL stylesheet for

defining how the data should be graphically displayed. Portable computer system **10** preferably includes a graphical output controller that verifies and translates the XML data according to the schema and XSL style sheet. In addition, the specified products and services may include electronic coupons and rebates for use when purchasing the products or services at the venue or on-line. For example, a user may receive an electronic coupon when visiting a retailer's store that can be redeemed at the store or on-line.

In addition to descriptions of products and services, data that is typically included on a business card or company description may be transmitted to portable computer system **10**. For example, if a user enters an insurance agency, the server system for the insurance agency preferably receives a user profile from portable computer system **10** and transmits electronic business card XML data files for the office employees to portable computer system **10**. Thereby, the user receives an electronic copy of the office employees personal data, such as data typically included on a business card, in an XML data file that can be selectively added to an address book by matching elements of the XML data file with elements of the address book.

A second function of PSA **90** is determining service and product recommendations to a retailer staff. Service and product recommendation to a retailer staff may be determined from the customer's preferences, location, registration, previous purchases, the store's customer service policy and available products and services. For example, if a user enters the store whose customer preference indicate that the user appreciates staff assistance, that the user is shopping for a new bed, and that the user prefers dark woods, a staff person would be provided with a list of possible products from PSA **90** and a profile about the user that will assist the staff person in approaching the customer. In another example, a user's preferences may indicate that the user does not need help from a salesperson, for example when shopping for furniture. PSA **90** might determine that a staff person should greet the customer and only offer assistance if requested. Output controller **92** preferably controls distribution of service and product recommendations to output interface(s) that are accessible only by staff.

Service and product recommendations may be stored by customer and according to the staff person(s) who view the service and product recommendations to determine if the staff person(s) followed through on the recommendations and the response by the customer. In addition, an electronic customer satisfaction form may be transmitted to a user after exiting a store whereby the user may electronically indicate satisfaction with service. By monitoring service and product and recommendations and customer responses, business analysis of a store's productivity due to factors such as the effectiveness of different models of consumer assistance, may be more easily determined.

A third function of PSA **90** is determining which advertising selections from advertising database **86** to display in a store, in an open arena, on the road-side and on-line. Advertising selections are preferably determined by PSA **90** according to customer preferences in current customer database **96** and the type of output interface. Further, advertising selections may be filtered according to the specialized listing of products and services that are determined by PSA **90** and offered to the customer on via the user's portable computer system **10**. Moreover, additional criteria, such as current sales, may be utilized to filter advertising selections for advertising database **86**. For example, typically there is more than one customer in a store. Therefore, PSA **90** would select advertising selections according to multiple customer preferences. In selecting advertising selections according to multiple customer preferences, criteria such as customer preferences for the majority of customers, customer preferences for frequency shoppers, customer preferences for users who have been in the store for a certain period of time, etc. may be utilized to filter advertising selection.

The advertising selections determined by PSA **90** are preferably output to multiple output interfaces **98***a*-**98***n* as controlled by output controller **92**. Output controller **92** may control transmission of the advertising selections via a communication medium that includes wired and wireless connections. In an example, a teenage clothing store may include display monitors around a mall that are adjusted according to the detected customer preferences of teenagers near the display monitors. As a teenager enters the store, display monitors at the front of the store may adjust to advertising specific for that teenager's preferences. For example, if that teenager likes to wear all pink and black, current clothing stock in pink and black would be displayed. Other display monitors around the store would display advertising that fits a majority of the customer's preferences in the store. For example, if the majority of shoppers are men, then more male oriented advertising might be displayed. When a teenager enters a fitting room, a display monitor may show a video advertisement and play music that is specific to the teenager's preferences. Moreover, a small display monitor at the cash register might show an advertisement for a small item that is located near the register according to purchases being made by the teenager.

Portable computer system **10** preferably includes multiple preferences recorded in a single database or multiple databases and applications stored in a data storage medium **40**. In the present example data storage medium **40** is depicted as internally accessible to portable computer system **10**, however in alternate embodiments, data storage medium **40** may be accessible externally or remotely.

In the example depicted, customer preferences include clothing preferences **42**, food preferences **44**, exercise preferences **46**, travel preferences **48**, reading preferences **50**, entertainment preferences **52**, decorating preferences **54**, and gift preferences **56**. Included in the customer preferences may be a shopping list of items to find, budget preferences, location preferences, content preferences, customer service preferences, etc. For example, clothing preferences **42** may include preferred manufacturers, sizes, colors, clothing types for upcoming events, budget constraints, etc. while reading preferences **50** include a list of books to purchase, preferred types of literature, authors, current readings, etc. In additional examples, food preferences **44** may include preferences such as the type of table that a user likes to sit at (i.e. outdoor/indoor, in a corner/away from a corner, smoking/nonsmoking, etc.) and exercise preferences **46** include preferences for a massage afterwards within a particular travel distance of the gym and the training, length of sessions, and sex of the massage therapist may also be indicated.

While these preferences represent many of the consumer preferences that may be designated by a user at portable computer system **10**, the consumer preferences depicted are intended to illustrate possible preferences and do not limit the types of consumer preferences which may be stored on data storage medium **40**. Moreover, the preferences may be stored in multiple types of formats and may be compiled and sorted according to multiple criteria. For example, a list of items to find at a particular shopping center may be sorted.

In addition, preferences are preferably storable on portable computer system **10** for other people or clients. Moreover, consumer preferences are preferably transmittable from one portable computer system to another portable computer sys-

tem. For example, a decorator may include a list of decorating preferences for multiple clients within decorating preferences **54** of the decorator's portable computer system, where the decorating preferences for multiple clients are transmitted from the client's portable computer system to the decorator's portable computer system. In another example, a parent may include a list of children's clothing preferences in clothing preferences **42** of the parent's portable computer system.

In addition, to including preferences on portable computer system **10**, the user's schedule **58** and user profile **60** are preferably included. The user's schedule **58** preferably includes an electronic calendar of events, appointments and tasks. User profile **60** preferably includes personal data about the user such as name, sex home data, work data, payment account information, marital status, primary language, children, etc. In addition, user profile **60** may include encrypted registration ID's for various retailers as a result of the user registering with the retailer that can be easily decrypted by the retailer's server system. Moreover, user profile **60** may include cookies from registration with multiple retailers.

Moreover, portable computer system **10** includes global positioning functions **72**. Advantageously, portable computer system **10** includes GPS **33** that detects and transmits the position of portable computer system **10** and may passively receive additional information about surroundings including traffic, descriptions of stores and offices, etc. according to location. The position of portable computer system **10** and surrounding are preferably utilized by global positioning functions **72** to provide maps of the current location with directions to stores and offices, routes to avoid traffic, etc.

Portable computer system **10** includes a preference coordinator application **70** that coordinates the consumer preferences, schedule **58**, user profile **60**, global positioning functions **72** and other data stored on portable computer system **10** with transmission controller **64**. For example, a user may select by preference coordinator application **70** to broadcast preferences and location in the transmittable data format via transmission controller **64** to any retailer server system, such as server system **80**, that is able to detect the user's physical presence within a particular proximity according to the user's scheduled travel time. In another example, a user may select by preference coordinator application **70** to transmit location and preferences to a particular server system or group of server systems that are able to detect the user's physical presence within a particular proximity. In yet another example, preference coordinator application **70** coordinates transmittal of a request by a user for a restaurant that provides a particular type of wine according to a user's preference. Preference coordinator application **70** broadcasts the preferences to restaurants that are able to detect the user's physical presence within a particular proximity and to restaurants with web pages accessible via the Internet that include wine listings. Thereby, a bot application is simulated where requests for a particular wine are transmitted locally and remotely.

Moreover, preference coordinator application **70** analyzes the consumer preferences, schedule **58**, user profile **60** and location to provide the user with recommended shopping venues. In particular, preference coordinator application **70** preferably has access to a map and position via global positioning functions **72** such that the user's current location in comparison with retailers and other offices can be determined. Preference coordinator application **70** processes the selections of products and services received from various retailers in accordance with the location, expected travel time, schedule and other data to provide a recommendation of stores with directions and estimated travel time. For example, if a user's food preferences **44** include a grocery list that includes specialty Asian cooking products and two Asian grocery stores within a particular area transmit a selection of products including the specialty Asian cooking products, preference coordinator application **70** would analyze the prices offered by each grocery store and the travel time in comparison with whether time or money is a larger constraint for the user to recommend one of the two Asian grocery stores.

In addition, portable computer system **10** includes a preference filter application **62** and filtering preferences **68**. Preference filter application **62** filters data prior to transmittable from and data received at portable computer system **10** according to filtering preferences **68**. Filtering preferences **68** indicate which data should be filtered from transmittal and receipt according to multiple types of criteria. For example, certain types of data to be transmitted to a server system that does not include a secure data transmission may be filtered according to filtering preferences **68**. In addition, data to be transmitted to a server system for a particular type of retailer may be filtered according to filtering preferences **68**. Moreover, data received at portable computer system **10** from, for example, a grouping of restaurants may be filtered according to preferences set in filtering preferences **68** in order to prevent products and services spamming.

Preferably, portable computer system **10** receives requests from server system **80** to register with a retailer. Preference coordinator application may be set to automatically return a request for registration with user profile **60** and the consumer preferences. Alternatively, a user may select particular filtering preferences **68** to be applied to user profile **60** and the consumer preferences by preference filter application **62** prior to enabling transmission of the data for electronic registration with the retailer. By registering with a retailer, a user can quickly make electronic purchases with the retailer via portable computer system **10** and may be registered to received special electronic product and service offers and other special offerings.

In addition, a user may select to electronically purchase a product or service that is transmitted to portable computer system **10** from retailer server system **80**. The user may select to have the product or service delivered to the user or the user may opt to receive the product or service at a store front. For example, a user may select to purchase a birthday gift from a local store via the selection of products and services received at portable computer system **10** for that store. If the user is already registered with the retailer, preference coordinator application **70** would direct transmission controller **64** to transmit a request for the product along with payment authorization. In addition, the request for a product may include a wrapping paper selection. Remote server system **80** would receive the product request with the wrapping paper selection and direct the request to the gift wrapping department. If the user is going to pick up the purchase, an estimated time until ready may be transmitted from server system **80** to portable computer system **10**. In this manner, a user remotely order products and services from a store via portable computer system **10**.

While the present invention may be applied to any server system **80** in communication with a portable computer system **10**, multiple examples are provided in order to further describe the functions of the present invention. In an example of the present invention, a user includes ski preferences on portable computer system **10** that include the brand of skis, length of skis, size of boots, types of slopes, etc. A server system for a ski rental store would retrieve the user's preferences in the transmittable data format and provide the user with a selection of ski rental recommendations according to

the user's preferences. In addition, if the user prefers snowboards over skis, the display monitors in the store that are accessible to the user may show advertising focused on snowboarding apparel and accessories provided at the store. Once the user reaches a ski resort, the server system for the ski resort would retrieve the user's ski preferences in the transmittable data format and provide a map of recommended runs and lifts required to get to the runs. In addition, the ski resort server system may retrieve the user's ski instructor preferences that designate preferences for an instructor that can speak Spanish and is male. The ski resort server system would determine ski instructors that match the user's preferences and return a schedule of course to select from that the instructor teaches. In addition, the ski resort server system might retrieve the user's food preferences **44** and recommend restaurants on the slopes that meet the user's food preferences. Moreover, the ski resort server system might retrieve the user's entertainment preferences **52** and provide an advertisement for a band playing that evening at the base that meets the user's entertainment preferences. In addition, a user may purchase an electronic ski lift ticket from the ski resort server system via their portable computer system, where the electronic ticket is stored on the portable computer system and detectable at a ski lift to allow entrance to the lift. In purchasing a ticket, the user preferable registers with the ski resort server system and may provide data from user profile **60** including health insurance, medications and known health problems such that if any injury should occur to the user the ski resort personnel would better assist the user.

In another example, under entertainment preferences, a user may store seating preferences and budget preferences for entertainment. Rather than standing in line to purchase a ticket for a performance, a user accesses a web site where the tickets may be purchased. The user's seating preferences and/or budget preferences and number of tickets needed are transmitted from portable computer system **10** to the server system for the web site where a selection of available seats is determined and transmitted back to portable computer system **10**. The user may then select seating and automatically transmit filtered user profile data **60**, including form of payment, to the server system. The server system would record the purchase of the tickets and preferably transmit an electronic ticket to portable computer system **10**. Upon arriving at a theater, the theater server system would detect and verify the electronic ticket from portable computer system **10** and transmit a map of the theater seating with directions to the user's seating back to portable computer system **10**. In addition, the user may indicate in user profile data **60** that assistance is needed by the user when being seated in a theater. When the theater server system detects the user, the theater server system would recommend that an usher be provided to the user.

In yet another example, a user includes display preferences on their portable computer system **10**. The display preferences might include preferences such as viewing textual data in a large font or in color blind accessible colorings. In an example, a user may transmit their ATM number, transaction amount and display preferences to an ATM machine via portable computer system **10**. The ATM machine would adjust the textual display according the user's preferences and perform the requested functions.

In yet another example of the present invention, a restaurant may include a server system that detects user food preferences from a portable computer system including smoking preferences, drink preferences, appetizer preferences, entree preferences, dessert preferences, seating preferences, decorative preferences, etc. In addition, the restaurant server system includes a reservation list and estimated waiting times. Upon receiving a user's food preferences, the restaurant server system may determine and transmit to the user's portable computer system the next available reservation slot or the wait for seating according to the user's smoking preferences and seating preferences. In addition, the restaurant food server may determine and transmit a selection of food menu items, including a featured wine, that meet the drink and entree preferences. The user may select to be placed on the reservation or waiting list and may designate that the featured wine should be served at the user's table when seated. Thereby, the restaurant server system would prompt a host or waiter to server the featured wine when seating the user.

It is important to note that the level of analysis, functions and services provided by server system **80** is determined by the retailer and therefore retailer server systems and output interfaces may be updated without updating portable computer system **10**. For example, a server system may upgrade detectors to increase the range of detection of signals from portable computer systems. In addition, it is important to note that portable computer system **10** is customizable and upgradable according to user preferences. For example, a user may select a smaller portable computer system **10** with a text-only display or with a graphics capable display.

With reference now to FIG. **4**, there is depicted a high level logic flowchart of a process and program for controlling a retailer server system in accordance with the method, system, and program of the present invention. As illustrated, the process starts at block **100** and thereafter proceeds to block **102**. Block **102** depicts a determination as to whether or not the location, preferences and/or user profile are received from a portable computer system for a user. If the location, preferences and/or user profile are not received, then the process iterates at block **102**. If the location, preferences and/or user profile is received, then the process passes to block **104**. Block **104** illustrates storing the location and preferences in the current customer position database. Next, block **106** depicts looking up the user profile in the customer registration and history database. Thereafter, block **108** illustrates a determination as to whether or not the customer is registered. If the customer is registered, then the process passes to block **118**. If the customer is not registered, then the process passes to block **110**.

Block **110** depicts transmitting a registration request to the user. Next, block **112** illustrates a determination as to whether or not the user responds with a request for registration. If the user does not respond with a request for registration, then the process passes to block **118**, unless the user must be a registered user in order to obtain data from the server system and then the process would end. If the user responds with a request for registration, then the process passes to block **114**. Block **114** depicts automatically filling in an electronic form with the data from the user profile and storing the electronic form in the customer registration and history database. Next, block **116** illustrates transmitting registration data for the user to the user's portable computer system and the process passes to block **118**. In particular, an encrypted login name and password may be transmitted as registration data, or alternatively a number or other identifier that represents the user.

Block **118** depicts designating a selection of products and/or services from the products and services database according to customer preferences and any registration and history data. Next, block **120** illustrates transmitting the selection of products and/or services for the user to the user's portable computer system. Thereafter, block **122** depicts designating a selection of advertisements from the advertising database according to customer preferences and location. Next, block **124** illustrates controlling output of the selection of adver-

tisements to multiple output interfaces. Block **126** depicts designating instructions to the store staff according to customer preferences, location and history. Thereafter, block **128** illustrates controlling output of the instructions to output interfaces accessible to the store staff and the process passes to block **130**.

Block **130** depicts a determination as to whether or not a request for a selection of offered products and services is received from the user. If a request for a selection of offered products and services is not received, then the process ends. If a request for a selection of offered products and services is received, then the process passes to block **132**. Block **132** illustrates a determination as to whether or not payment authorization is received if needed. If payment authorization is not received, then the process passes to block **136**. Block **136** depicts transmitting an error message and the process ends. If payment authorization is received, then the process passes to block **134**. Block **134** illustrates a determination as to whether or not the payment is verified. If the payment is not verified, then the process passes to block **136**. If the payment is verified, then the process passes to block **138**. Block **138** depicts adding the selected purchases to the user's history. Next, block **140** illustrates directing the requested order to the appropriate output interface. For example, if the requested order needs to be assembled, then the requested order is output to an output interface accessible to workers who perform assembly. Thereafter, block **142** depicts transmitting an electronic purchase indicator to the user's portable computer system and the process ends.

Referring now to FIG. **5**, there is illustrated a high level logic flowchart of a process and program for controlling a portable computer system in accordance with the method, system, and program of the present invention. As depicted, the process starts at block **150** and thereafter proceeds to block **152**. Block **152** illustrates a determination as to whether or not a request to broadcast the location, filtered preferences, and/or filtered user profile data is received. If a request to broadcast is received, then the process passes to block **154**. Block **154** depicts broadcasting the location, filtered preferences, and/or filtered user profile data to all server systems able to detect the broadcast signal within a particular proximity and the process passes to block **162**. If a request to broadcast is not received, then the process passes to block **156**. Block **156** illustrates a determination as to whether or not a request to selectively transmit location, filtered preferences, and filtered user profile data is received. If a request to selectively transmit is not received, then the process passes to block **152**. If a request to selectively transmit is received, then the process passes to block **158**. Block **158** depicts locating a selected server system. Next, block **160** illustrates transmitting the location, filtered preferences, and/or filtered user profile data to the selected server system and the process passes to block **162**.

Block **162** illustrates a determination as to whether or not a registration prompt is received. If a registration prompt is not received, then the process passes to block **163**. If a registration prompt is received, then the process passes to block **164**. Block **164** depicts a determination as to whether or not a request to register is received from the user. If a request to register is not received, then the process passes to block **166**. Block **166** illustrates transmitting a request to not register to a requesting server system and the process passes to block **163**. If a request to register is received, then the process passes to block **168**. Block **168** depicts transmitting a request for registration and required user profile data to the requesting server system. Next, block **170** illustrates a determination as to whether or not registration data is received from the requesting server system. If registration data is not received, then the process iterates at block **170** for a set time period. If registration data is received, then the process passes to block **172**. Block **172** depicts storing the registration data at the portable computer system and the process passes to block **163**.

Block **163** depicts a determination as to whether or not a selection of products and/or services is received. If a selection is not received, the process iterates at block **163**. If a selection is received, then the process passes to block **165**. Block **165** illustrates filtering output of the selection of products and/or services according to the user's filtering preferences. Next, block **174** depicts a determination as to whether or not a user selection of products and/or services from the selection of products and/or services provided by a particular server system is received. If a user selection of products and/or services is not received, then the process ends. If a user selection of products and/or services is received, then the process passes to block **176**. Block **176** illustrates transmitting the selection of products and/or services to the providing server system. Next, block **178** depicts transmitting payment authorization for the user selection of products and/or services to the providing server system. Thereafter, block **180** illustrates a determination as to whether or not a purchase indicator is received. If a purchase indicator is not received, then the process iterates at block **180**. If a purchase indicator is received, then the process passes to block **182**. Block **182** depicts storing the purchase indicator at the portable computer system and the process ends.

With reference now to FIG. **6**, there is depicted a pictorial diagram of multiple output interfaces controlled via a retailer server system in accordance with the method, system, and program of the present invention. As depicted, a movie theater server **250** includes a products and services database that includes multiple movie selections that are preferably sortable by actor, actress, type, rating, review, sound byte, etc and multiple food selections that are preferably sortable by type and cost. Portable computer system **10** includes entertainment preferences for movies as illustrated at reference numeral **264**. In the example, the user prefers the actors Jim Carrey, Kevin Bacon, and Kevin Spacey the actresses Annette Bening and Meg Ryan and movies that are classified as comedy and action. Preferably, the user's entertainment preferences are transmitted to movie theater server system **250** where movie theater server system **250** compares the user's entertainment preferences with the multiple movie selection and determines a selection of recommended movies. The selection of recommended movies is preferably transmitted to portable computer system **10** in a transmittable data format. The selection of recommended movies is displayed in a built-in display monitor **262**. As depicted at reference numeral **263**, one movie is recommended to the user. "Movie title A" includes two of the user's preferred actors and is an action film. The user may select to read a review, as indicated at reference numeral **266**, hear a sound byte as indicated at reference numeral **268** or purchase tickets electronically as indicated at reference numeral **270**.

In addition, portable computer system **10** includes food preferences for entertainment food as depicted at reference numeral **265**. In the example, the user prefers candies including M&Ms® and Milk Duds®, root beer drink, and ice cream including chocolate and strawberries, but not ice cream bars. In addition, a food budget for entertainment food of $4.00 is designated. Preferably, the user's food preferences are transmitted to movie theater server system **250** where movie theater server system **250** compares the user's food preferences with the multiple food selections and determines a selection

of recommended food treats. The selection of recommended food treats is preferably transmitted to portable computer system **10** is a transmittable data format. In addition, icons and other graphical representations may be included in the data formatting for display. The selection of recommended food treats is displayed in built-in display monitor **262** as illustrated at reference numeral **263**. In the example, a user may select from M&Ms® and a small root beer or Milk Duds® and a medium root beer. In addition, an M&Ms® icon is depicted as indicated at reference numeral **272** and a root beer icon is illustrated as indicated at reference numeral **276**. Moreover, a user may select to electronically place an order by selecting graphical icon **274**.

Prior to the movie start, multiple large display screens **252**, **254**, **256**, **258** and **260** along a corridor with the movie theater may display advertising for current and upcoming movie releases or advertising for food treats. In the present example, movie theater server system **250** preferably coordinates the advertising displayed on display screens **252** and **258** according to the movie type of a movie that will begin showing in the next ten minutes. If an action movie will be shown in the next ten minutes in a theater adjacent to the corridor with display screens **252** and **258**, then advertising for upcoming action movies is preferable displayed as indicated in the example. Movie theater server system **250** preferably coordinates the advertising displayed on display screens **254** and **256** with movies containing the actors and actresses preferred by users within the corridor. When the user with entertainment preferences **264** is detected in the corridor of the movie theater, display screens **254** and **256** are preferably controlled by movie server system **250** to display advertisements for upcoming movies with Jim Carey and Annette Bening, for example. Moreover, movie theater server system **250** preferably coordinates the advertising displayed on display screen **260** with the food preferences of users within the corridor. When the user with user food preferences **265** is detected in the corridor of the movie theater, display screen **260** is preferably controlled by movie server system **250** to display an advertisement, for example, of a new ice cream treat for $5.00.

It is important to note that, although the present invention has been described in the context of a fully functional computer system, those skilled in the art will appreciate that the mechanisms of the present invention are capable of being distributed as a program product in a variety of forms, and that the present invention applies equally regardless of the particular type of signal-bearing media utilized to actually carry out the distribution. Examples of signal-bearing media include, but are not limited to, recordable-type media such as floppy disks or CD-ROMs and transmission-type media such as analogue or digital communications links.

While the invention has been particularly shown and described with reference to a preferred embodiment, it will be understood by those skilled in the art that various changes in form and detail may be made therein without departing from the spirit and scope of the invention.

What is claimed is:

1. A method for automatically electronically registering a user, said method comprising:

generating a request to transmit a plurality of profile elements to a selected server system from among a plurality of server systems;

transmitting said request to a portable computer system in response to a determination that said portable computer system is within a particular proximity to said plurality of server systems;

receiving a user profile comprising said plurality of profile elements in a particular transmittable data format at said selected server system from said portable computer system, wherein

said selected server system is identified at said portable computer system utilizing data within said plurality of profile elements specifying a consumer preference in response to a receipt of said request at said portable computer system,

said user profile is associated with a particular user of said portable computer system, and

each of said plurality of server systems is respectively associated with one of a plurality of consumer providers; and

registering said particular user with a consumer provider of said plurality of consumer providers in response to a receipt of said user profile at said selected server system, wherein said consumer provider is associated with said selected server system.

2. The method for automatically electronically registering a user according to claim **1**, wherein said registering comprises:

inserting each of said plurality of profile elements respectively into a specified plurality of electronic registration elements required for electronic registration at said selected server system; and

transmitting a registration indicator for said particular user from said selected server system to said portable computer system in said particular transmittable data format.

3. The method for automatically electronically registering a user according to claim **2**, said method further comprising:

in response to a receipt of said registration indicator at said selected server system, retrieving an electronic registration for said particular user.

4. The method for automatically electronically registering a user according to claim **1**, said method further comprising:

automatically filtering a plurality of products and services offered by said consumer provider according to said user profile for said particular user; and

transmitting a specified offering from among said plurality of products and services to said portable computer system for said particular user.

5. The method for automatically electronically registering a user according to claim **1**, wherein said particular transmittable data format comprises an extensible mark-up language data format.

6. A data processing system for automatically electronically registering a user, said data processing system comprising:

a processor; and

data storage coupled to the processor, wherein the data storage includes program code that, when executed by the processor, causes the data processing system to:

generate a request to transmit a plurality of profile elements to a selected server system from among a plurality of server systems;

transmit said request to a portable computer system in response to a determination that said portable computer system is within a particular proximity to said plurality of server systems;

receive a user profile comprising said plurality of profile elements in a particular transmittable data format at said selected server system from said portable computer system, wherein

said selected server system is identified at said portable computer system utilizing data within said plurality of

profile elements specifying a consumer preference in response to a receipt of said request at said portable computer system,

said user profile is associated with a particular user of said portable computer system, and

each of said plurality of server systems is respectively associated with one of a plurality of consumer providers; and

register said particular user with a consumer provider of said plurality of consumer providers in response to a receipt of said user profile at said selected server system, wherein said consumer provider is associated with said selected server system.

7. The data processing system for automatically electronically registering a user according to claim **6**, wherein said program code causes the data processing system to register the particular user by:

inserting each of said plurality of profile elements respectively into a specified plurality of electronic registration elements required for electronic registration at said selected server system; and

transmitting a registration indicator for said particular user from said selected server system to said portable computer system in said particular transmittable data format.

8. The data processing system for automatically electronically registering a user according to claim **7**, wherein said program code further causes the data processing system to:

retrieve an electronic registration for said particular user, in response to a receipt of said registration indicator at said particular server system.

9. The data processing system for automatically electronically registering a user according to claim **6**, wherein said program code further causes the data processing system to:

automatically filter a plurality of products and services offered by said consumer provider according to said user profile for said particular user; and

transmit a specified offering from among said plurality of products and services to said portable computer system for said particular user.

10. The data processing system for automatically electronically registering a user according to claim **6**, wherein said particular transmittable data format comprises an extensible mark-up language data format.

11. A computer program product for automatically electronically registering a user, the computer program product comprising:

a computer-readable storage medium; and

program code stored within the computer-readable storage medium and executable by a computer to cause the computer to:

generate a request to transmit a plurality of profile elements to a selected server system from among a plurality of server systems;

transmit said request to a portable computer system in response to a determination that said portable computer system is within a particular proximity to said plurality of server systems;

receive a user profile comprising said plurality of profile elements in a particular transmittable data format at said selected server system from said portable computer system, wherein

said selected server system is identified at said portable computer system utilizing data within said plurality of profile elements specifying a consumer preference in response to a receipt of said request at said portable computer system,

said user profile is associated with a particular user of said portable computer system, and

each of said plurality of server systems is respectively associated with one of a plurality of consumer providers; and

register said particular user with a consumer provider of said plurality of consumer providers in response to a receipt of said user profile at said selected server system, wherein said consumer provider is associated with said selected server system.

12. The computer program product according to claim **11**, wherein said program code causes the computer to:

insert each of said plurality of profile elements respectively into a specified plurality of electronic registration elements required for electronic registration at said selected server system; and

transmit a registration indicator for said particular user from said selected server system to said portable computer system in said particular transmittable data format.

13. The computer program product according to claim **12**, wherein said program code causes the computer to retrieve an electronic registration for said particular user, in response to a receipt of said registration indicator at said particular server system.

* * * * *