US005459798A

# United States Patent [19]

**Bailey et al.**

[11] **Patent Number: 5,459,798**

[45] **Date of Patent: Oct. 17, 1995**

[54] **SYSTEM AND METHOD OF PATTERN RECOGNITION EMPLOYING A MULTIPROCESSING PIPELINED APPARATUS WITH PRIVATE PATTERN MEMORY**

[75] Inventors: **Delbert D. Bailey**, Aptos; **Carole Dulong**, Saratoga, both of Calif.

[73] Assignee: **Intel Corporation**, Santa Clara, Calif.

[21] Appl. No.: **60,579**

[22] Filed: **May 12, 1993**

**Related U.S. Application Data**

[63] Continuation-in-part of Ser. No. 34,678, Mar. 19, 1993.

[51] **Int. Cl.**[6] ..... **G06K 9/68**

[52] **U.S. Cl.** ..... **382/218**; 382/303; 364/231.8; 364/DIG. 1; 364/926.8; 364/948.34; 364/DIG. 2

[58] **Field of Search** ..... 382/13, 30, 33, 382/34, 41, 49; 364/229.2, 231.8, 240.1, 240.2, 242.3, 243, 243.43, 243.44, 243.45, 926.8, 948.34, 964, 964.21, 964.26

[56] **References Cited**

U.S. PATENT DOCUMENTS

| | | | |
|---|---|---|---|
| 4,395,699 | 7/1983 | Sternberg | 382/41 |
| 4,790,026 | 12/1988 | Gennery et al. | 382/49 |
| 5,014,327 | 5/1991 | Potter et al. | 382/14 |
| 5,111,512 | 5/1992 | Fan et al. | 382/3 |
| 5,226,091 | 7/1993 | Howell et al. | 382/3 |
| 5,265,174 | 11/1993 | Nakatsuka | 382/38 |

FOREIGN PATENT DOCUMENTS

| | | | |
|---|---|---|---|
| 0550865 | 7/1993 | European Pat. Off. | 382/13 |
| 56122445 | 2/1983 | Japan | 382/34 |
| 62-117744 | 11/1988 | Japan | 382/34 |

OTHER PUBLICATIONS

English Translation of Japanese Kokai 58–24975 (to Komiya, publ. Feb. 1983).

English Translation of Japanese Kokai 63–282586 (to Minewaki, publ. Nov. 1988).

*Primary Examiner*—Leo H. Boudreau
*Assistant Examiner*—Andrew W. Johns
*Attorney, Agent, or Firm*—Blakely, Sokoloff, Taylor & Zafman

[57] **ABSTRACT**

A computer implemented apparatus and method of pattern recognition utilizing a pattern recognition engine coupled with a general purpose computer system. The present invention system provides increased accuracy and performance in handwriting and voice recognition systems and may interface with general purpose computer systems. A pattern recognition engine is provided within the present invention that contains five pipelines which operate in parallel and are specially optimized for Dynamic Time Warping and Hidden Markov Models procedures for pattern recognition, especially handwriting recognition. These pipelines comprise two arithmetic pipelines, one control pipeline and two pointer pipelines. Further, a private memory is associated with each pattern recognition engine for library storage of reference or prototype patterns. Recognition procedures are partitioned across a CPU and the pattern recognition engine. Use of a private memory allows quick access of the library patterns without impeding the performance of programs operating on the main CPU or the host bus. Communication between the CPU and the pattern recognition engine is accomplished over the host bus.

**50 Claims, 16 Drawing Sheets**

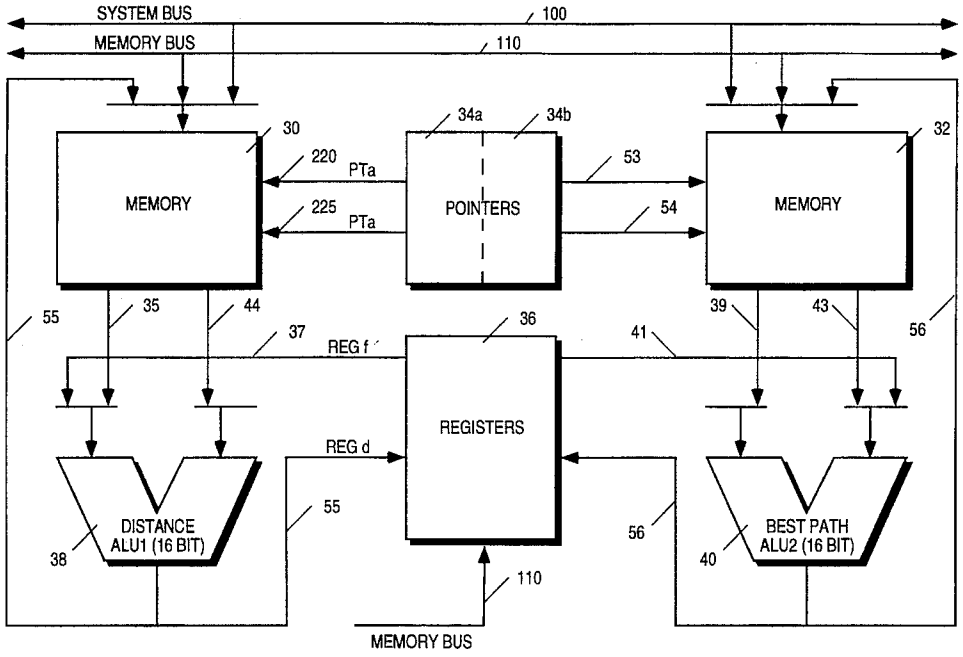

FIG. 1A

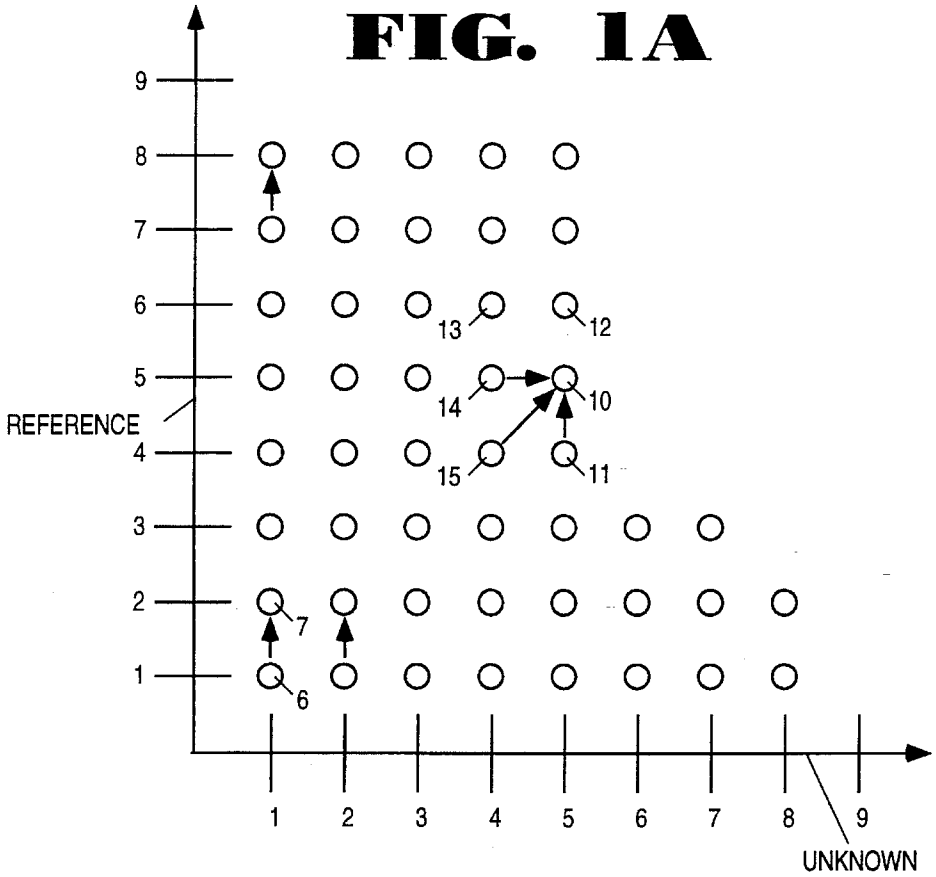
9
8
7
6
5
4
3
2
1
REFERENCE
13
12
14
10
15
11
7
6
1
2
3
4
5
6
7
8
9
UNKNOWN

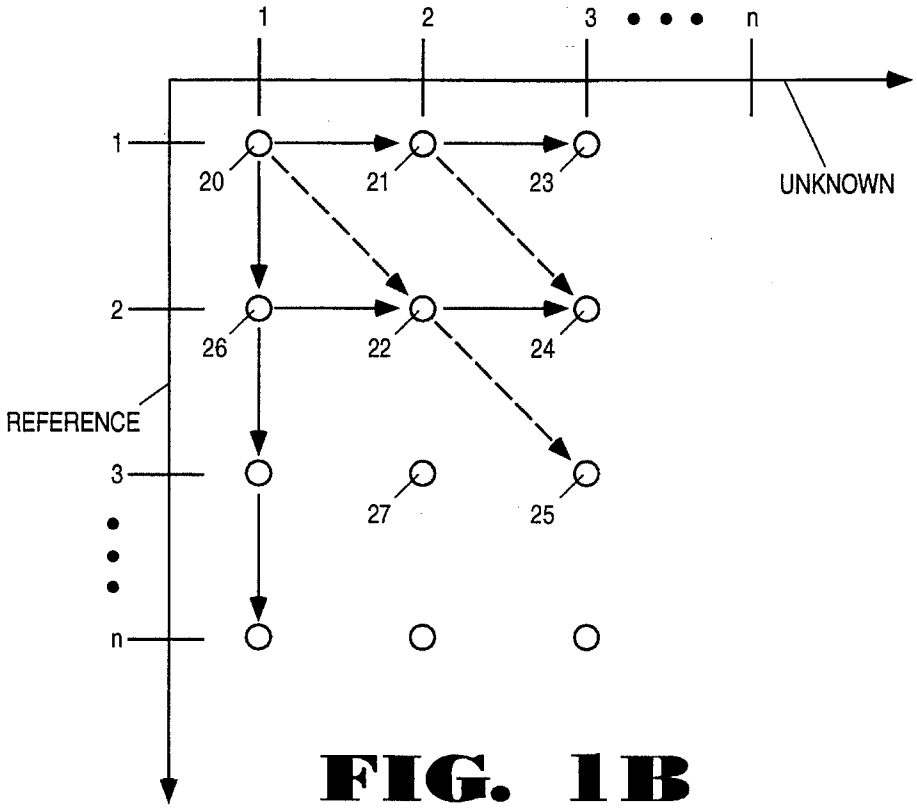
1
2
3
n
1
2
3
n
20
21
23
UNKNOWN
26
22
24
REFERENCE
27
25

FIG. 1B

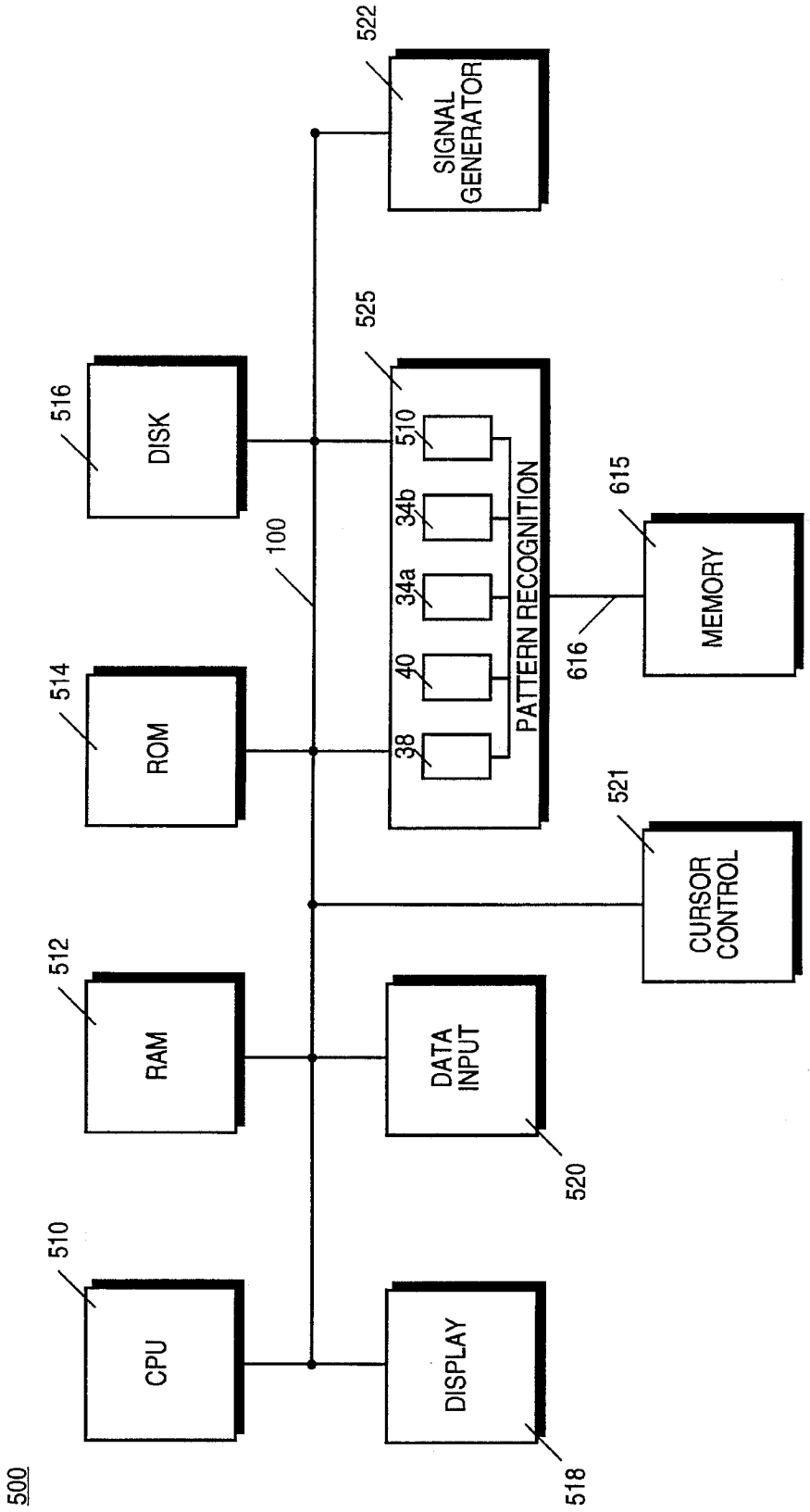
500
CPU
510
RAM
512
ROM
514
DISK
516
100
DISPLAY
518
DATA INPUT
520
CURSOR CONTROL
521
PATTERN RECOGNITION
525
38
40
34a
34b
510
616
MEMORY
615
SIGNAL GENERATOR
522

FIG. 2

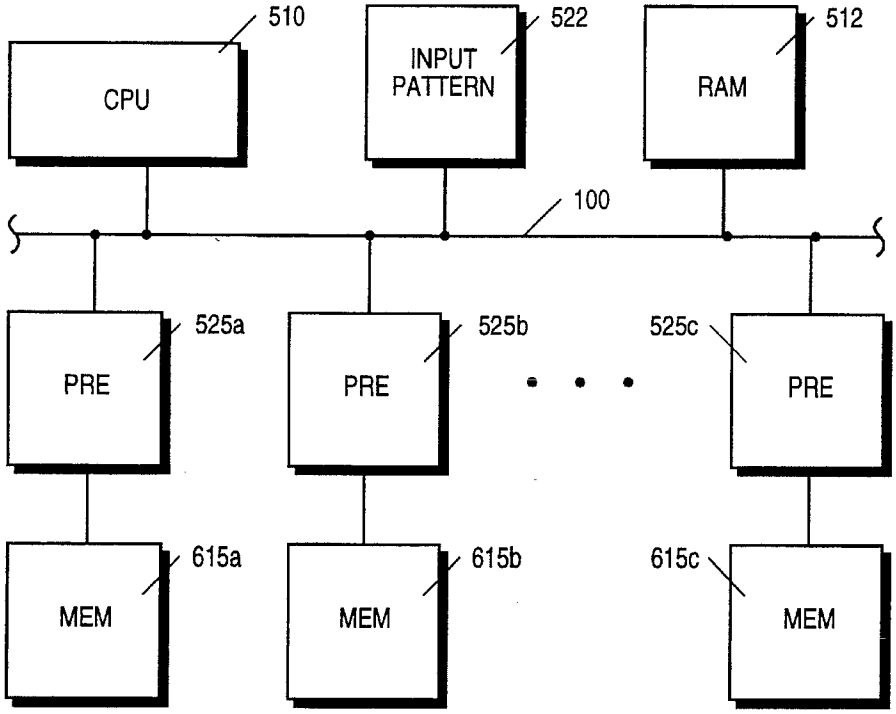
510
CPU
522
INPUT PATTERN
512
RAM
100
525a
PRE
525b
PRE
525c
PRE
615a
MEM
615b
MEM
615c
MEM

FIG. 3A

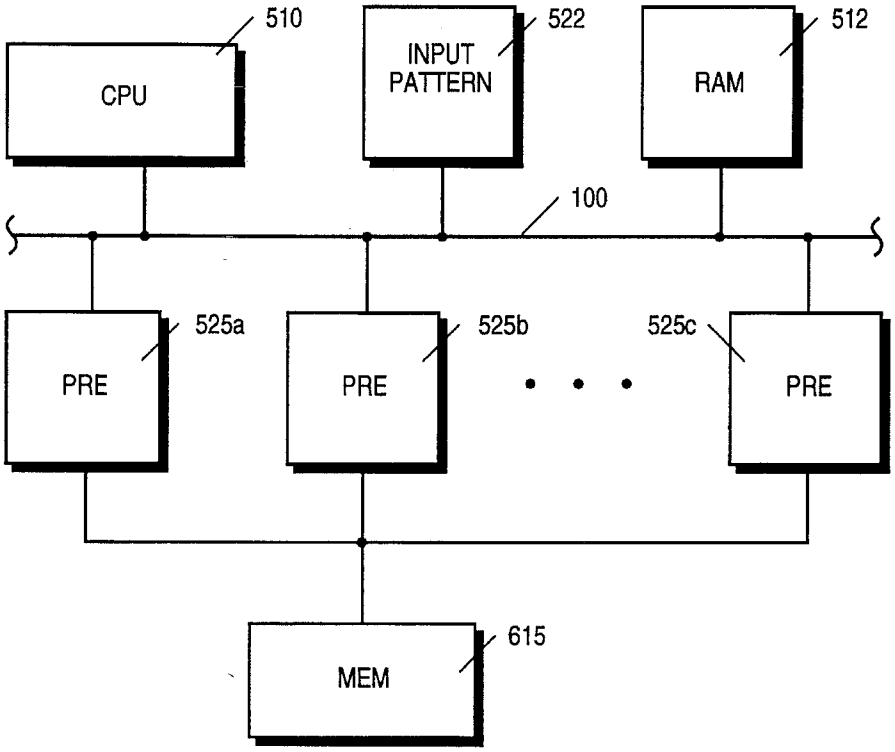
510
CPU
522
INPUT PATTERN
512
RAM
100
525a
PRE
525b
PRE
525c
PRE
615
MEM

FIG. 3B

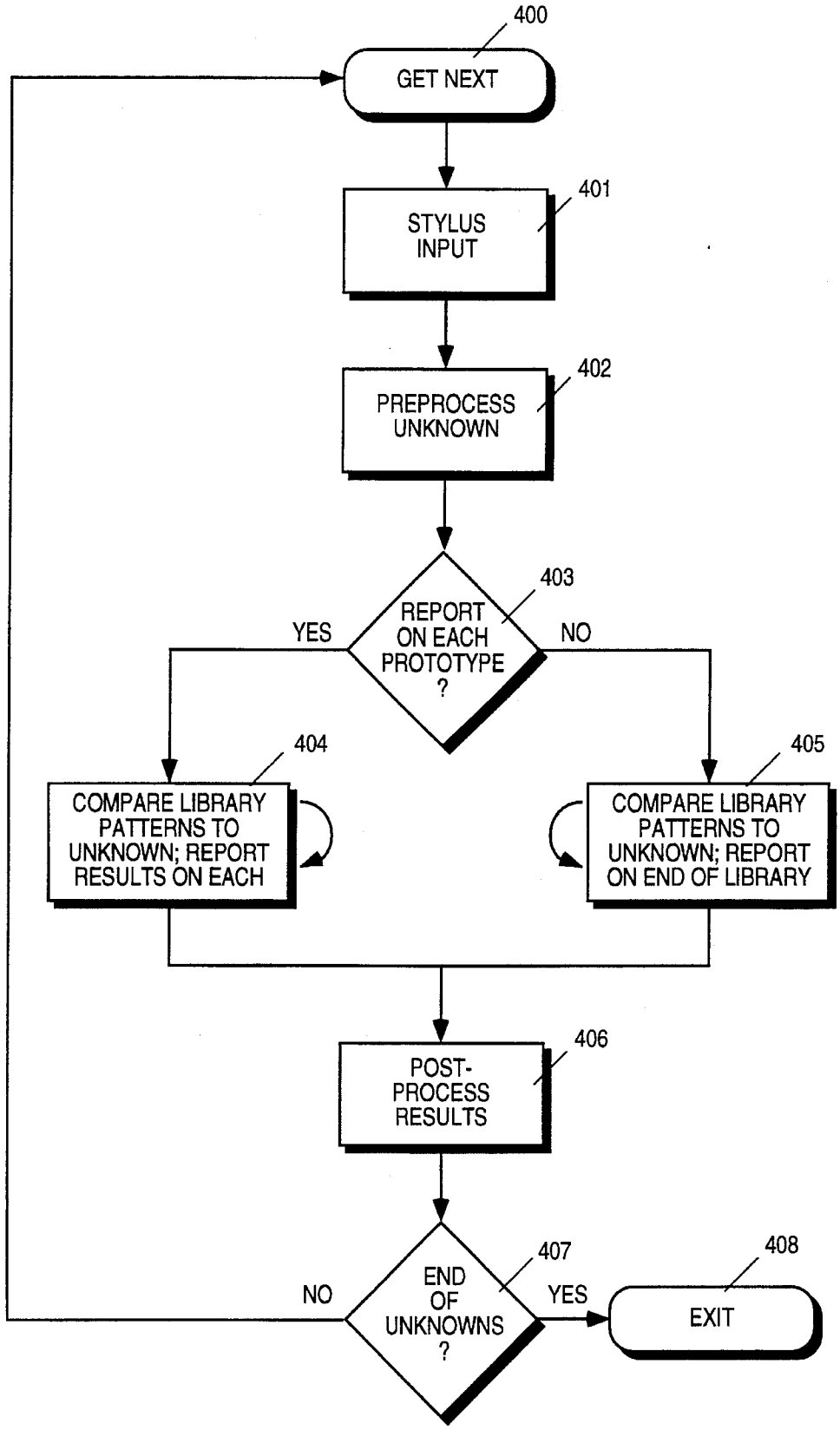
400
GET NEXT
401
STYLUS INPUT
402
PREPROCESS UNKNOWN
403
REPORT ON EACH PROTOTYPE ?
YES
NO
404
COMPARE LIBRARY PATTERNS TO UNKNOWN; REPORT RESULTS ON EACH
405
COMPARE LIBRARY PATTERNS TO UNKNOWN; REPORT ON END OF LIBRARY
406
POST-PROCESS RESULTS
407
END OF UNKNOWNS ?
NO
YES
408
EXIT

FIG. 4

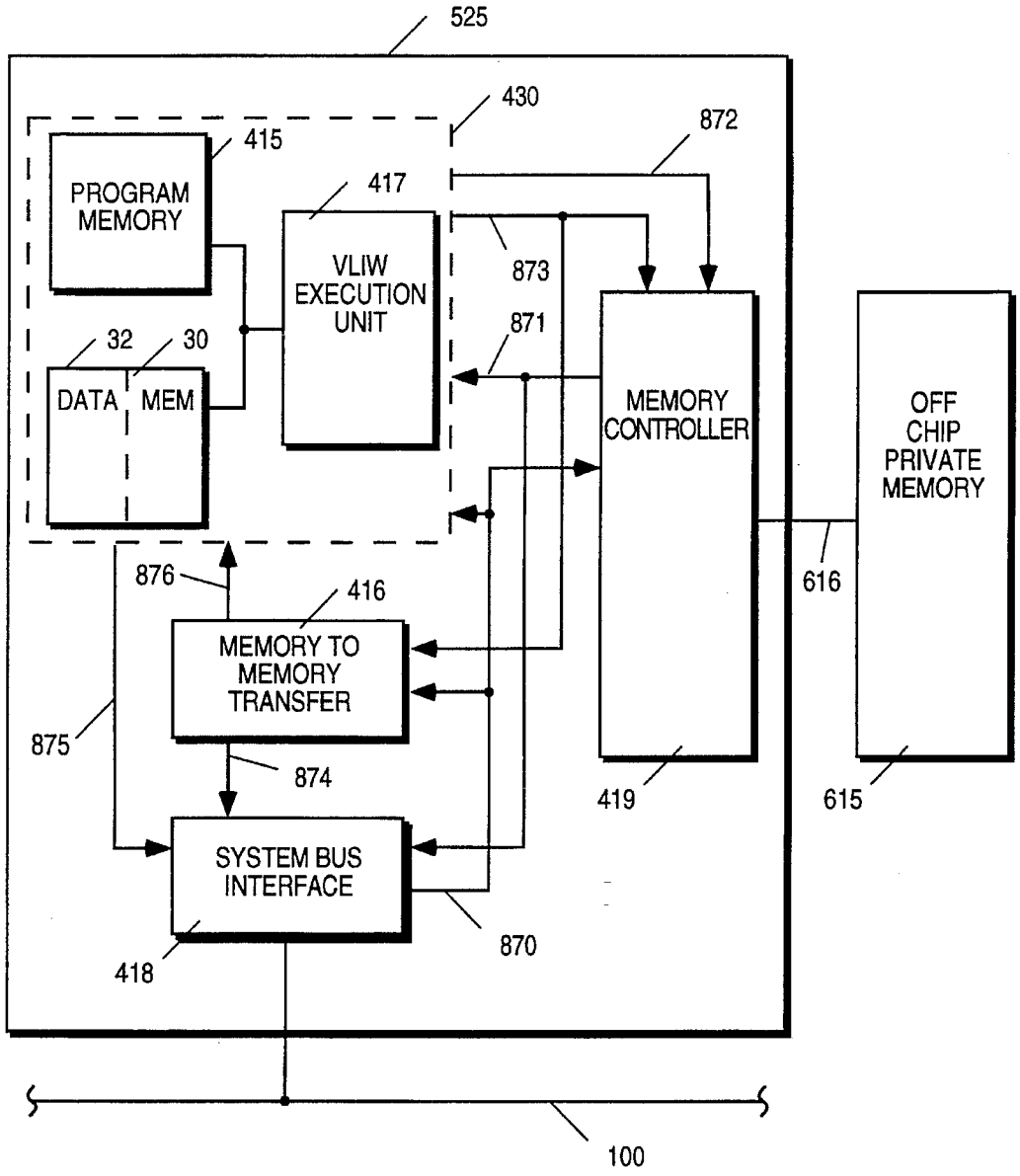
525
430
872
415
PROGRAM MEMORY
417
VLIW EXECUTION UNIT
873
871
32
30
DATA
MEM
MEMORY CONTROLLER
OFF CHIP PRIVATE MEMORY
616
876
416
MEMORY TO MEMORY TRANSFER
875
874
419
615
SYSTEM BUS INTERFACE
870
418
100

FIG. 5

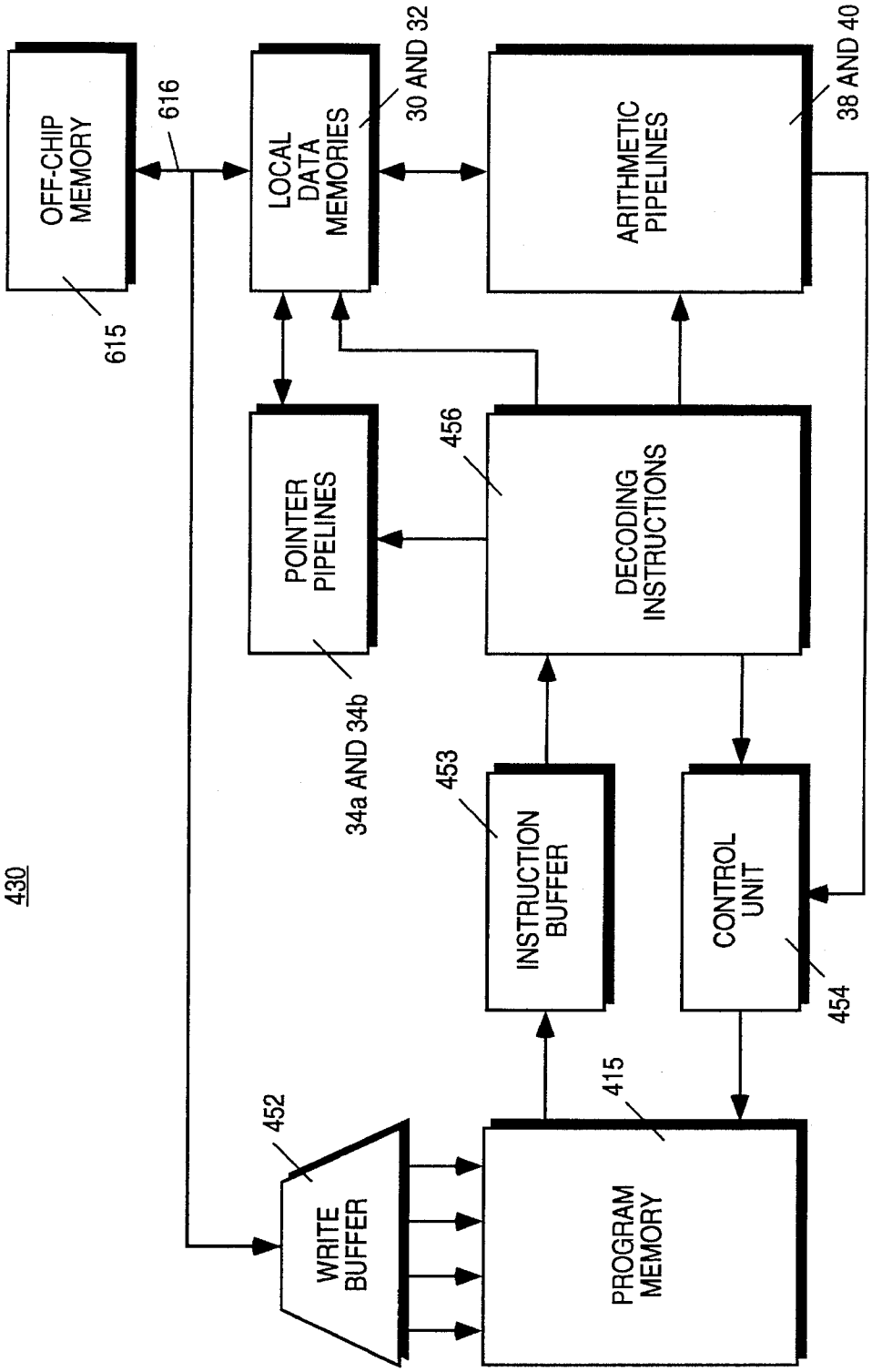
430
OFF-CHIP MEMORY
615
616
LOCAL DATA MEMORIES
30 AND 32
ARITHMETIC PIPELINES
38 AND 40
POINTER PIPELINES
34a AND 34b
456
DECODING INSTRUCTIONS
453
INSTRUCTION BUFFER
CONTROL UNIT
454
452
WRITE BUFFER
415
PROGRAM MEMORY

FIG. 6

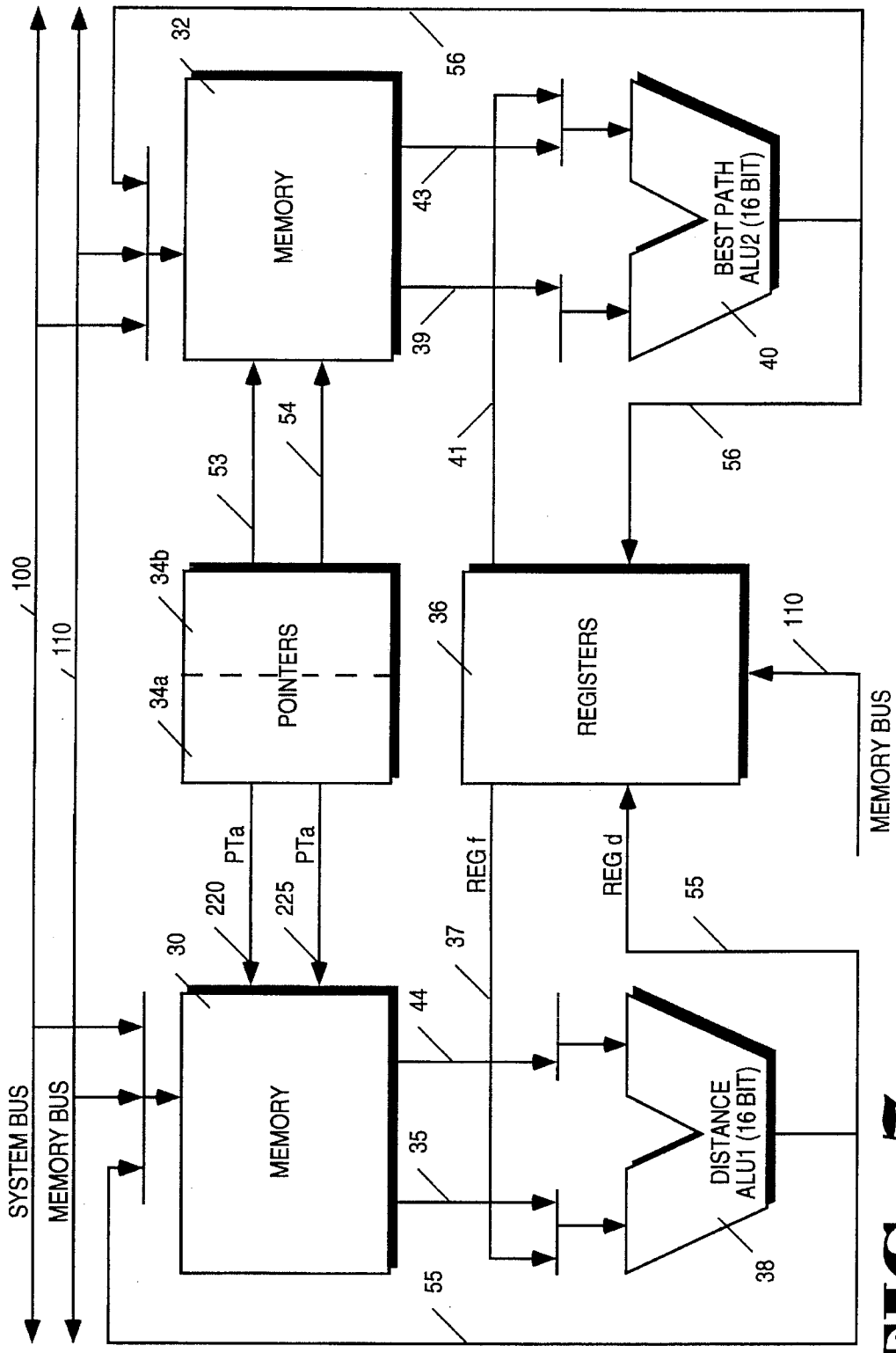
SYSTEM BUS
MEMORY BUS
100
110
MEMORY
32
56
43
39
BEST PATH
ALU2 (16 BIT)
40
53
54
41
56
34b
34a
POINTERS
36
REGISTERS
110
MEMORY BUS
PTa
PTa
220
225
REG f
REG d
55
30
37
44
35
MEMORY
DISTANCE
ALU1 (16 BIT)
38
55

FIG. 7

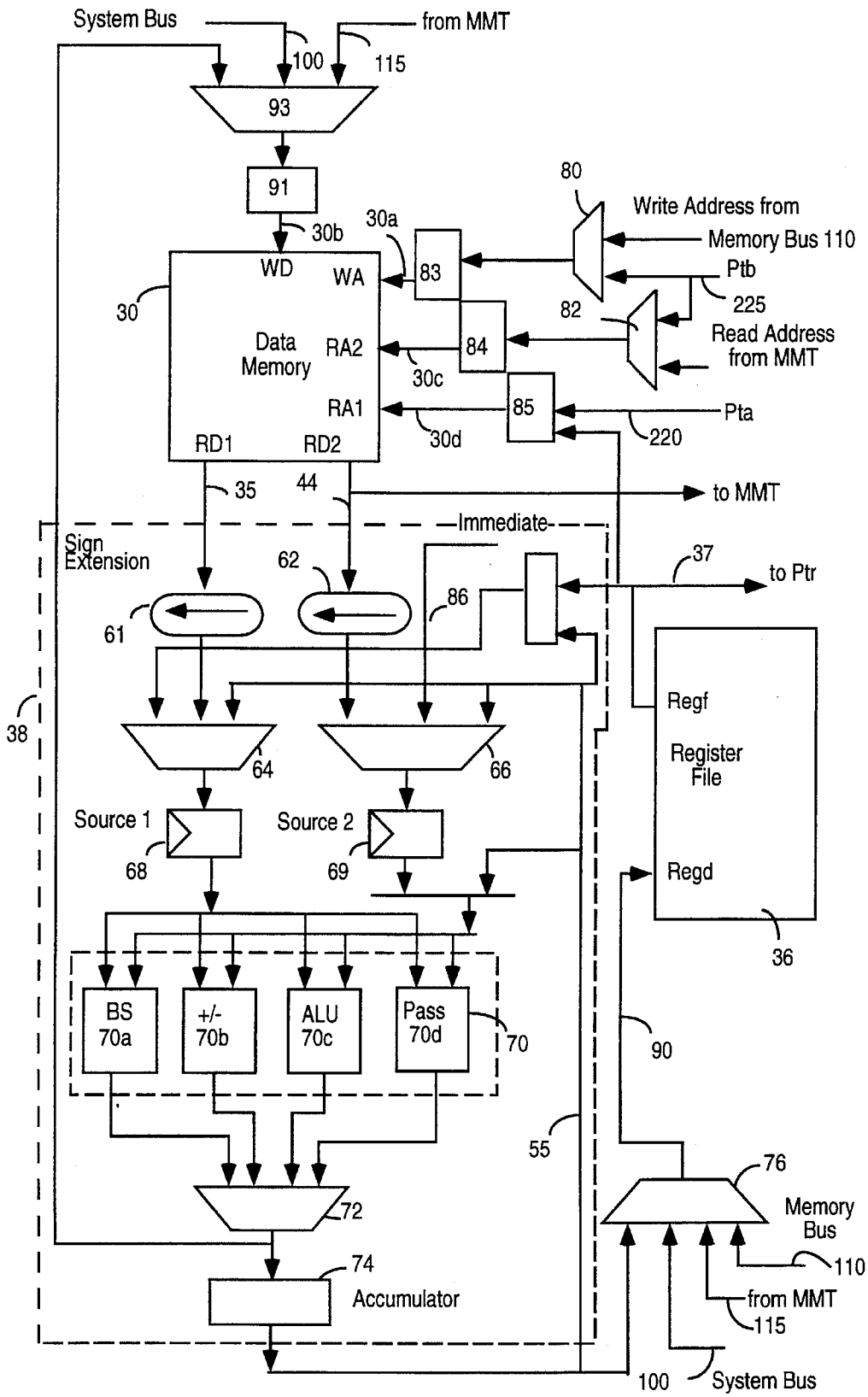
System Bus
from MMT
100
115
93
91
30b
30a
80
Write Address from
Memory Bus 110
Ptb
225
82
Read Address
from MMT
WD
WA
83
30
Data
Memory
RA2
84
30c
RA1
85
Pta
220
30d
RD1
RD2
35
44
to MMT
Immediate
Sign
Extension
62
37
to Ptr
86
61
Regf
Register
File
38
64
66
Source 1
Source 2
68
69
Regd
36
BS
70a
+/-
70b
ALU
70c
Pass
70d
70
90
55
76
72
Memory
Bus
110
74
Accumulator
from MMT
115
100
System Bus

FIG. 8

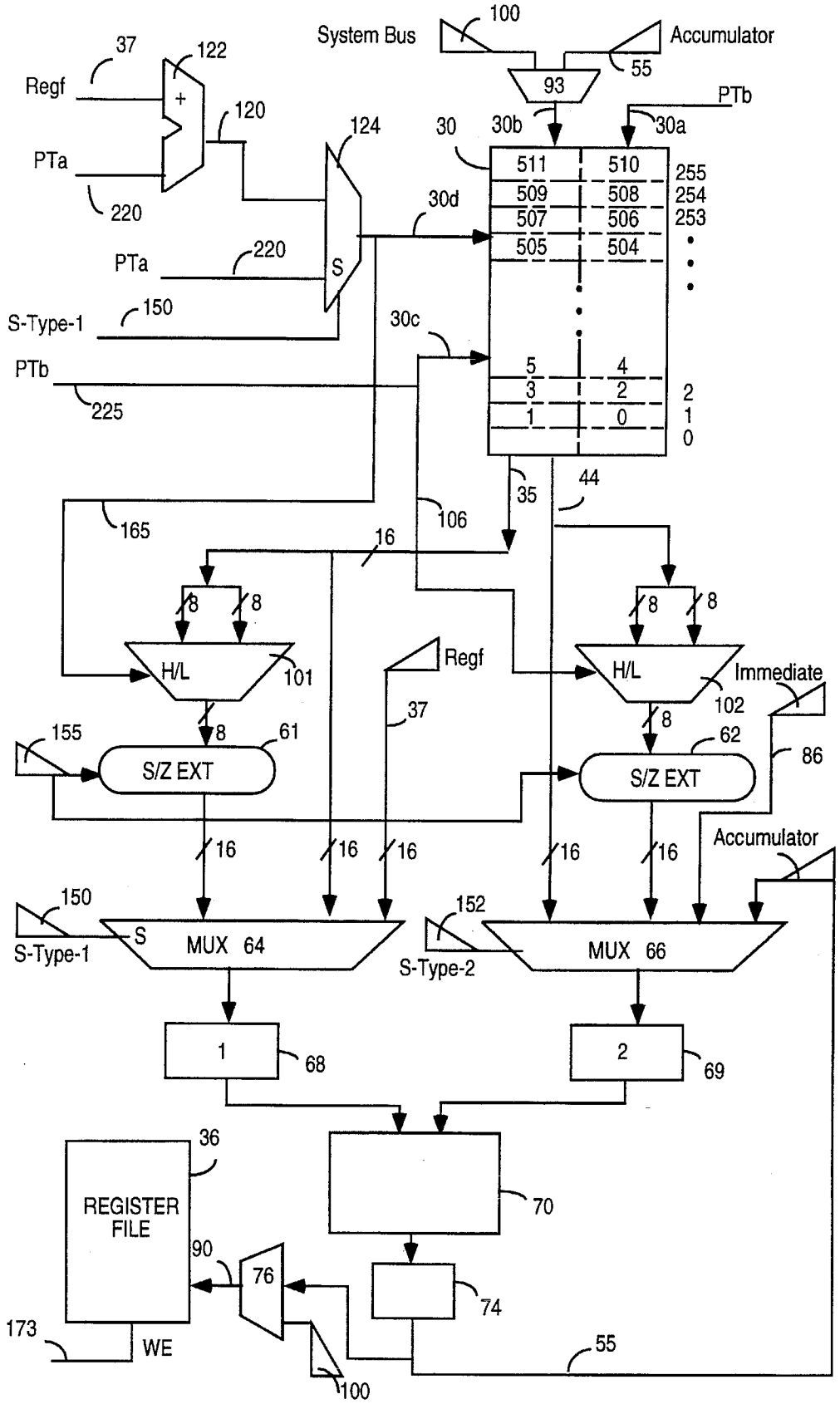
System Bus
100
Accumulator
55
93
PTb
37
122
Regf
+
120
124
30
30b
30a
PTa
220
30d
511
510
255
509
508
254
507
506
253
505
504
PTa
220
S
S-Type-1
150
30c
PTb
225
5
4
3
2
2
1
0
1
0
35
44
165
106
16
8
8
8
8
H/L
101
Regf
H/L
Immediate
102
37
155
8
61
8
62
86
S/Z EXT
S/Z EXT
16
16
16
16
16
Accumulator
150
S
S-Type-1
MUX 64
152
S-Type-2
MUX 66
1
68
2
69
36
REGISTER FILE
70
90
76
74
173
WE
55
100

FIG. 9

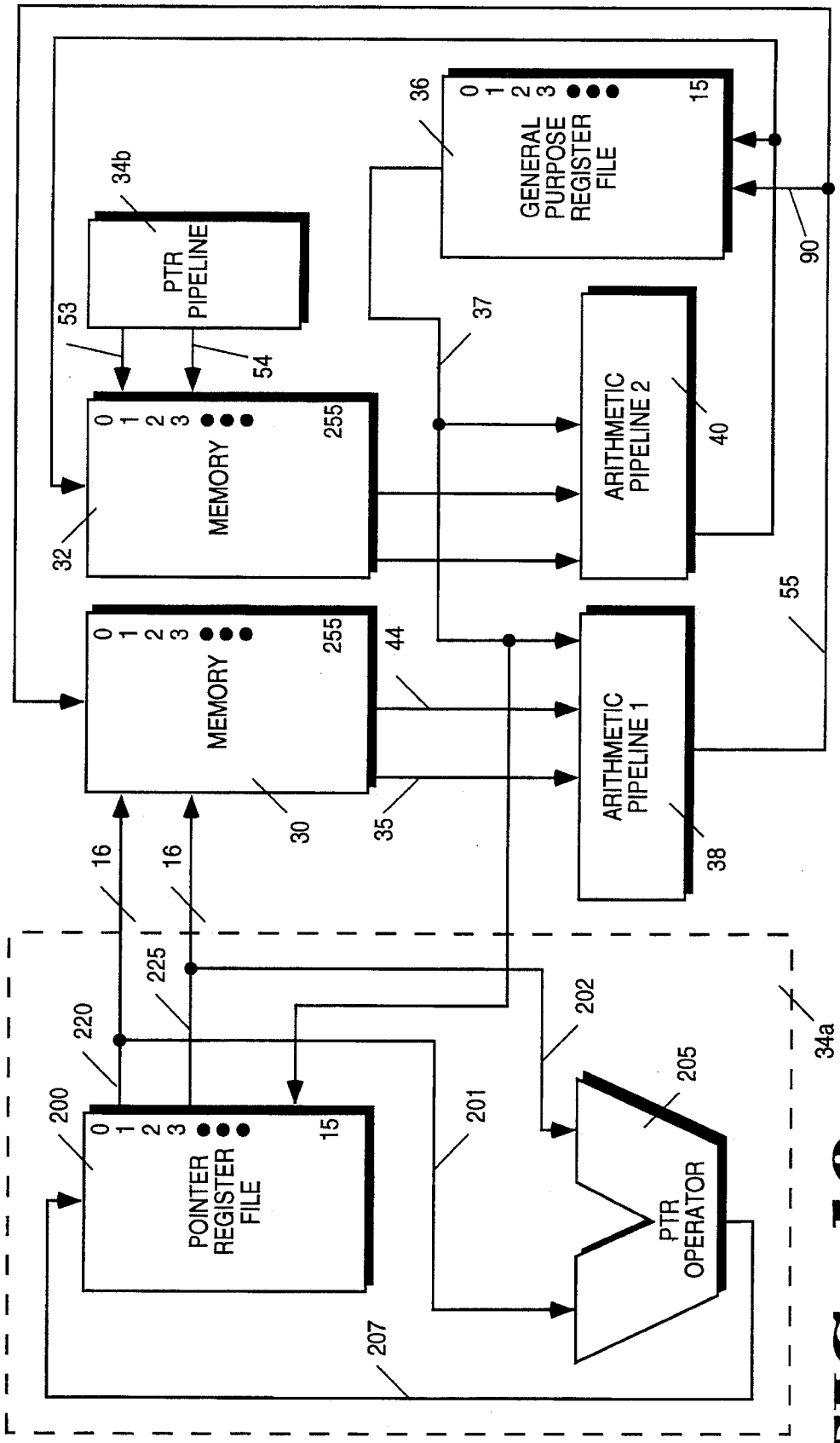
GENERAL PURPOSE REGISTER FILE
0
1
2
3
15
36
90
PTR PIPELINE
34b
53
54
37
MEMORY
255
32
ARITHMETIC PIPELINE 2
40
55
MEMORY
255
30
44
35
ARITHMETIC PIPELINE 1
38
16
16
225
220
200
POINTER REGISTER FILE
15
201
202
205
PTR OPERATOR
207
34a

FIG. 10

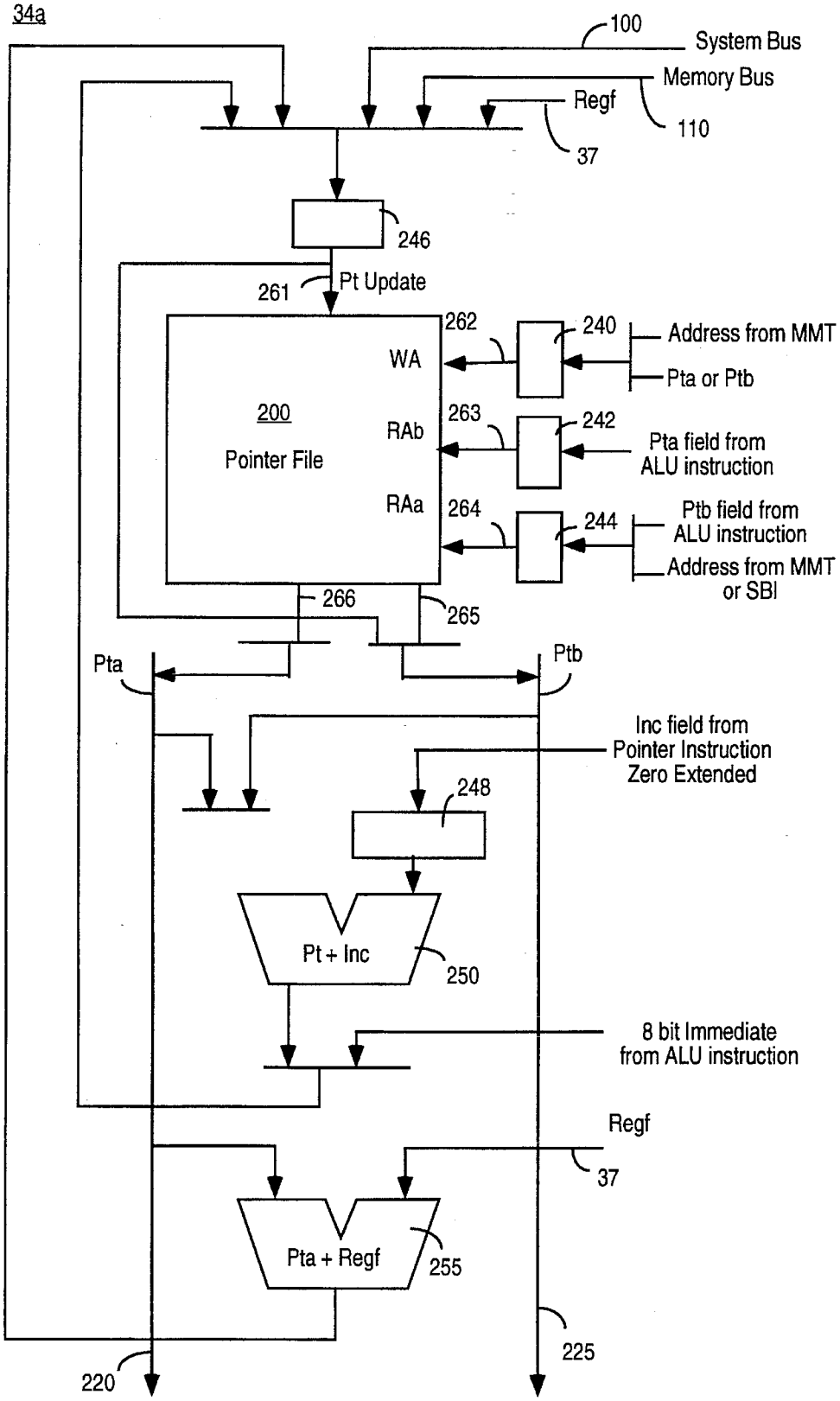
34a
100
System Bus
Memory Bus
Regf
110
37
246
261
Pt Update
262
240
Address from MMT
WA
Pta or Ptb
200
Pointer File
RAb
263
242
Pta field from
ALU instruction
RAa
264
244
Ptb field from
ALU instruction
Address from MMT
or SBI
266
265
Pta
Ptb
Inc field from
Pointer Instruction
Zero Extended
248
Pt + Inc
250
8 bit Immediate
from ALU instruction
Regf
37
Pta + Regf
255
225
220

FIG. 11

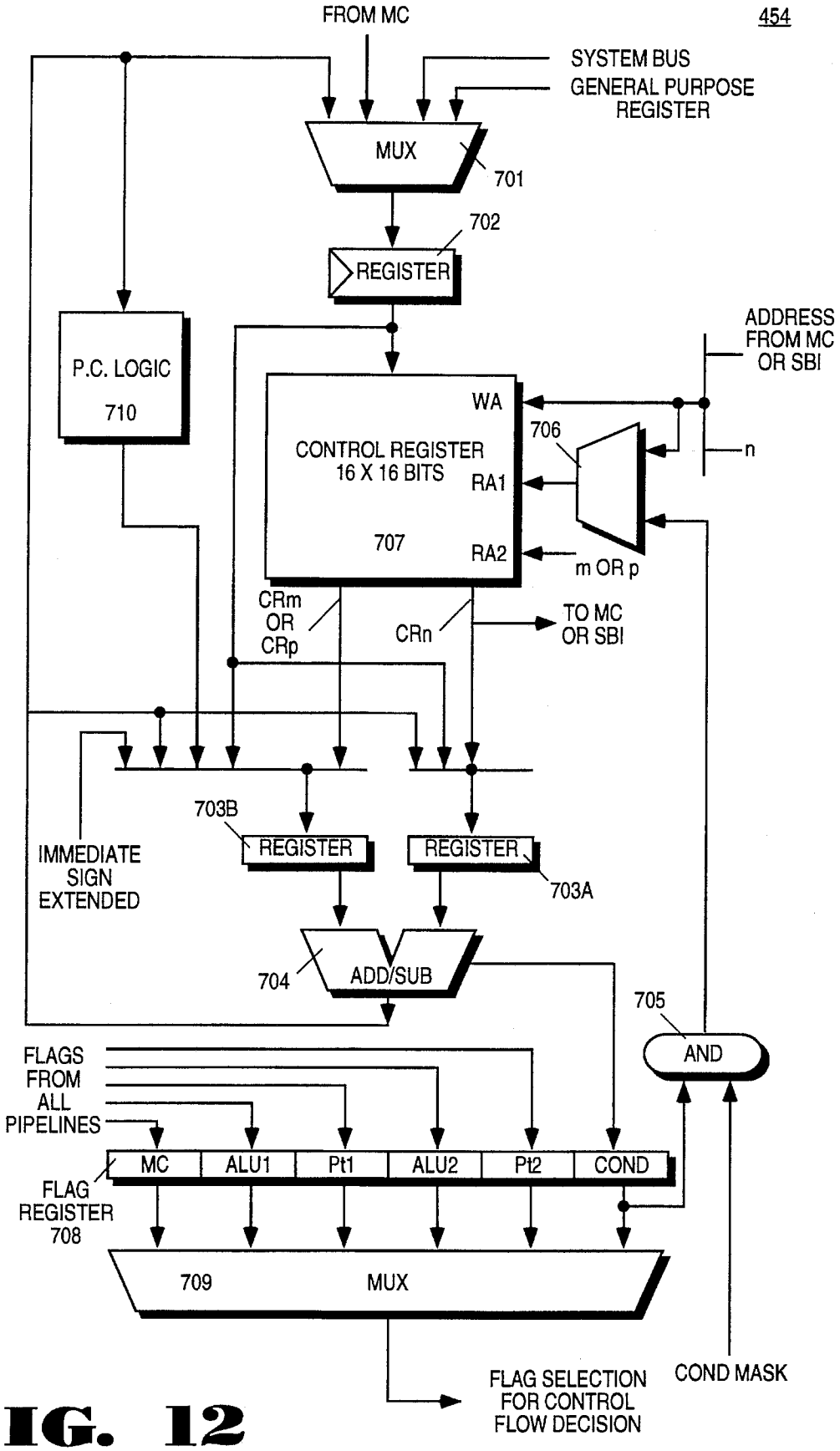
FROM MC
454
SYSTEM BUS
GENERAL PURPOSE REGISTER
MUX
701
702
REGISTER
P.C. LOGIC
710
ADDRESS FROM MC OR SBI
WA
706
CONTROL REGISTER 16 X 16 BITS
RA1
n
707
RA2
m OR p
CRm OR CRp
CRn
TO MC OR SBI
703B
REGISTER
REGISTER
703A
IMMEDIATE SIGN EXTENDED
704
ADD/SUB
705
AND
FLAGS FROM ALL PIPELINES
MC
ALU1
Pt1
ALU2
Pt2
COND
FLAG REGISTER 708
709
MUX
FLAG SELECTION FOR CONTROL FLOW DECISION
COND MASK

FIG. 12

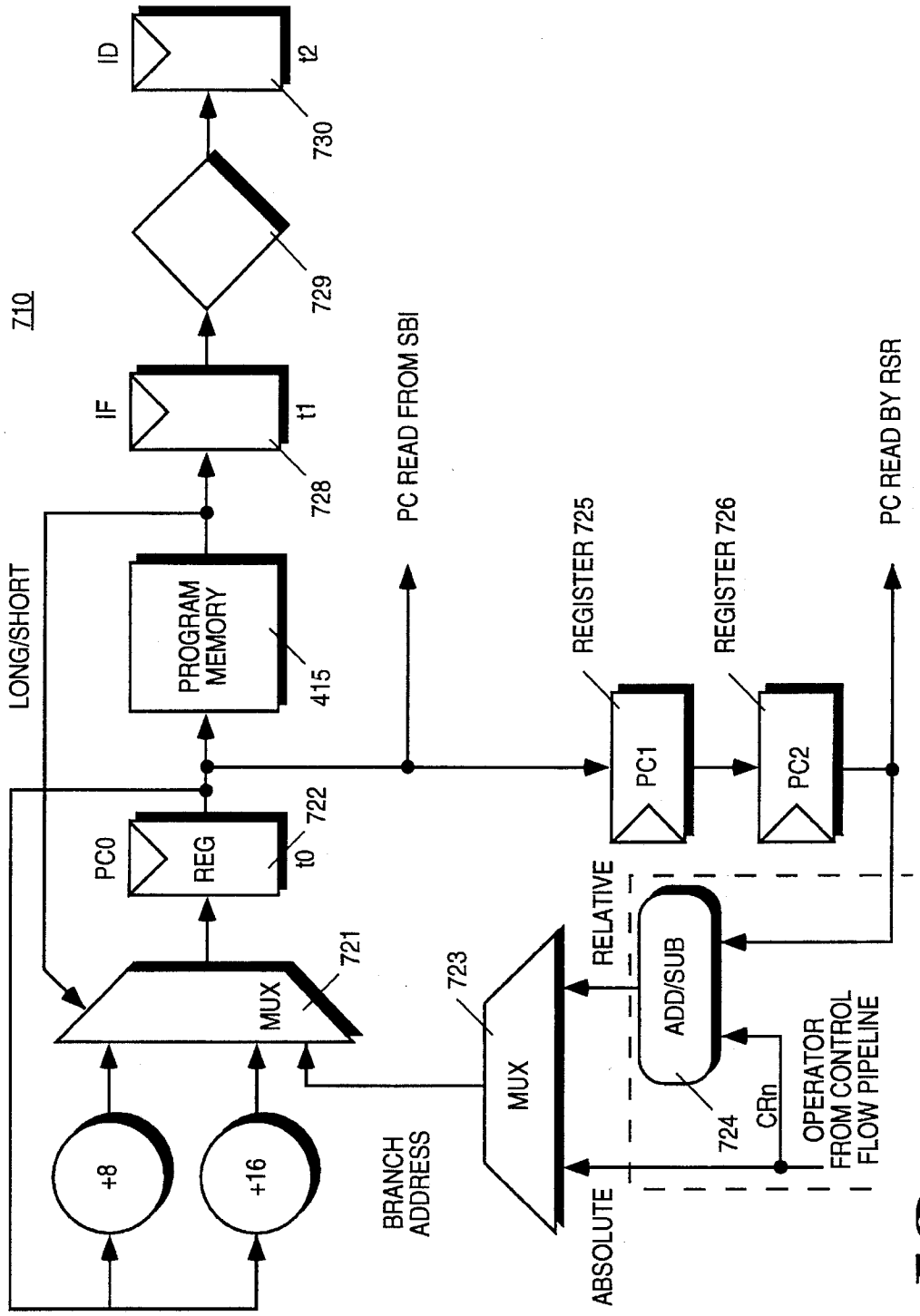
710
LONG/SHORT
+8
+16
MUX
721
PC0
REG
t0
722
PROGRAM MEMORY
415
IF
t1
728
729
ID
t2
730
PC READ FROM SBI
REGISTER 725
REGISTER 726
PC READ BY RSR
PC1
PC2
RELATIVE
ADD/SUB
724
CRn
OPERATOR FROM CONTROL FLOW PIPELINE
723
MUX
BRANCH ADDRESS
ABSOLUTE

FIG. 13

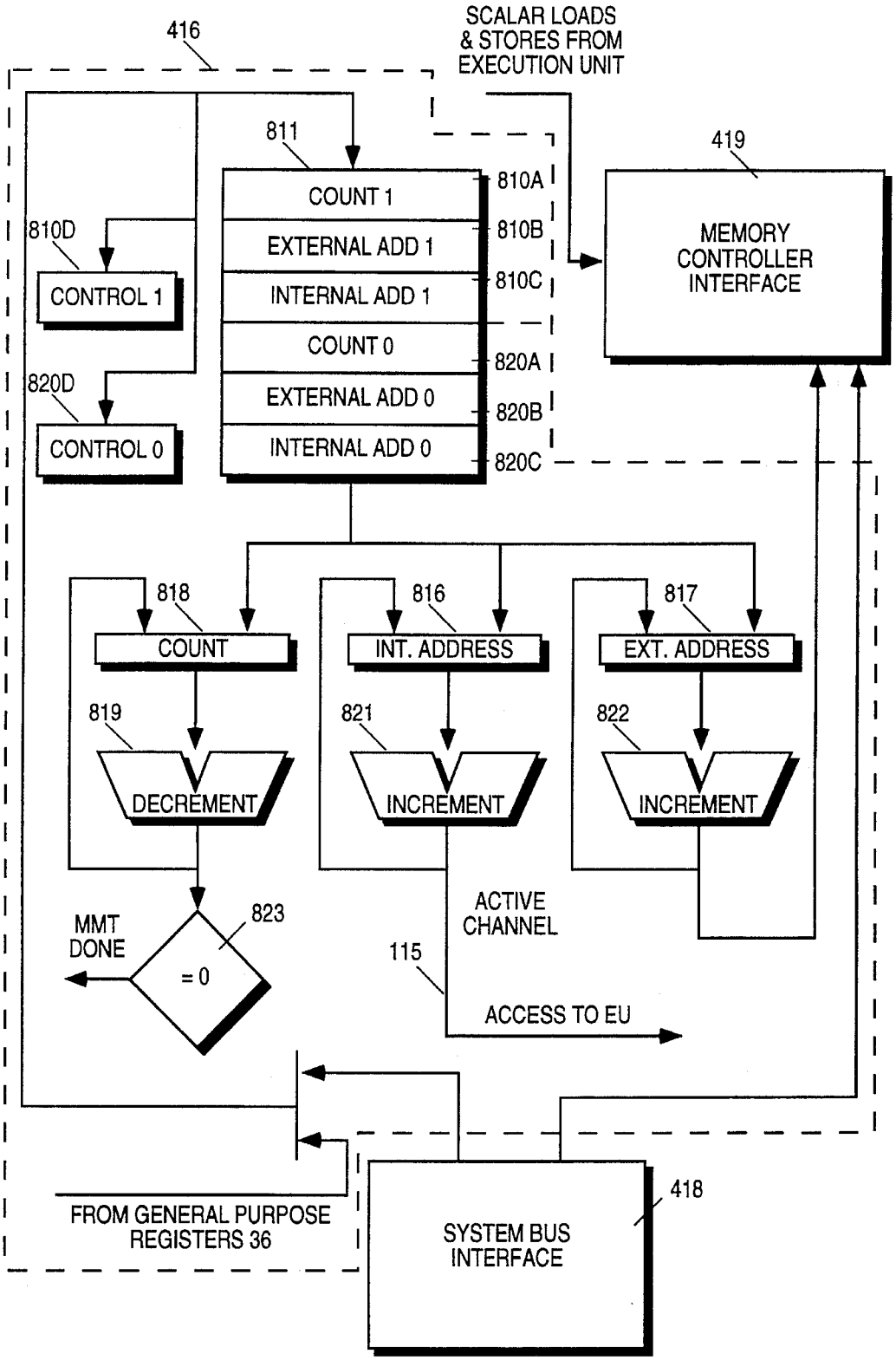
416
SCALAR LOADS & STORES FROM EXECUTION UNIT
811
419
COUNT 1
EXTERNAL ADD 1
INTERNAL ADD 1
COUNT 0
EXTERNAL ADD 0
INTERNAL ADD 0
810A
810B
810C
820A
820B
820C
MEMORY CONTROLLER INTERFACE
810D
CONTROL 1
820D
CONTROL 0
818
COUNT
816
INT. ADDRESS
817
EXT. ADDRESS
819
DECREMENT
821
INCREMENT
822
INCREMENT
MMT DONE
823
= 0
ACTIVE CHANNEL
115
ACCESS TO EU
FROM GENERAL PURPOSE REGISTERS 36
SYSTEM BUS INTERFACE
418

FIG. 14

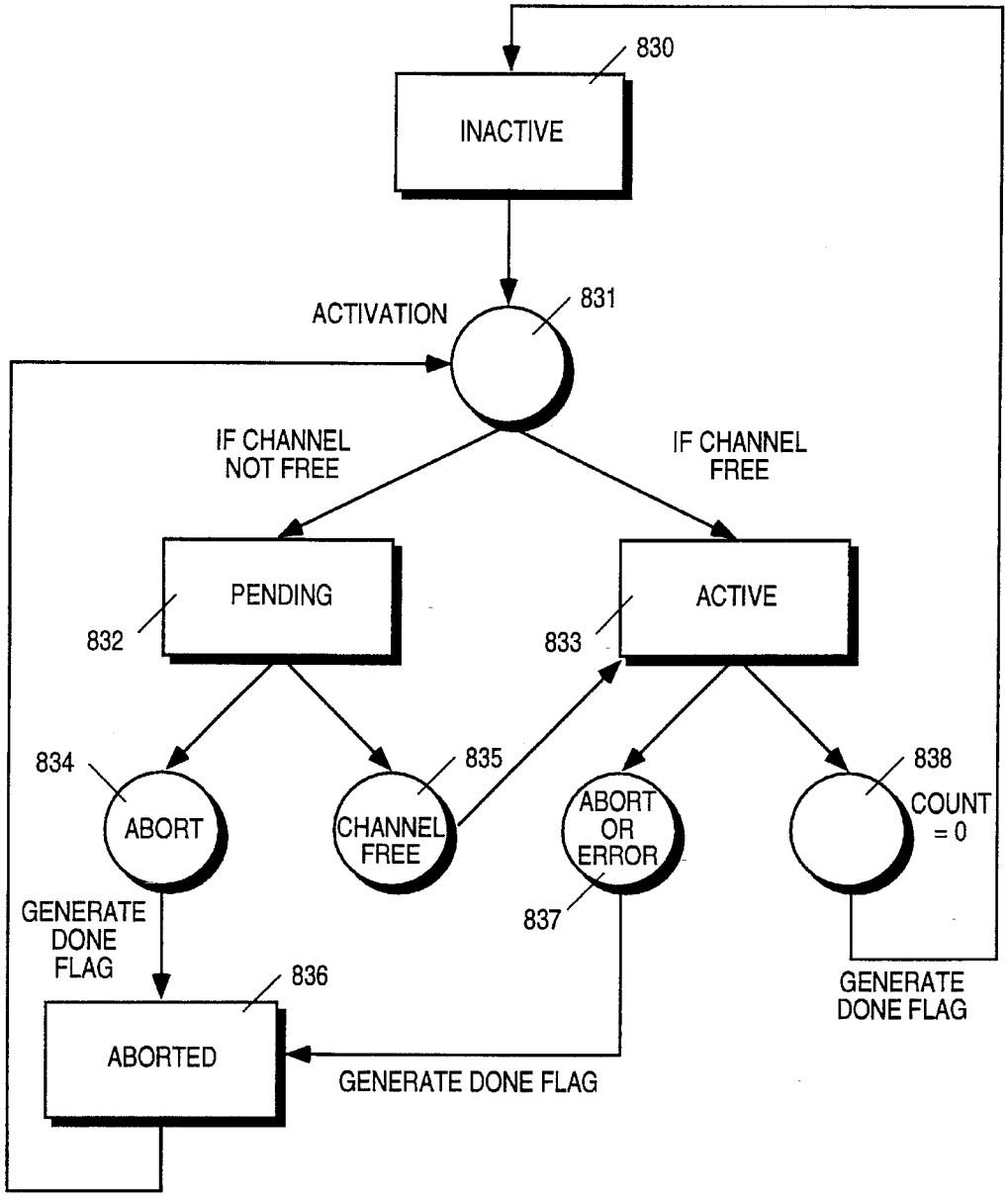
830
INACTIVE
ACTIVATION
831
IF CHANNEL
NOT FREE
IF CHANNEL
FREE
PENDING
832
ACTIVE
833
834
ABORT
835
CHANNEL
FREE
ABORT
OR
ERROR
837
838
COUNT
= 0
GENERATE
DONE
FLAG
836
ABORTED
GENERATE DONE FLAG
GENERATE
DONE FLAG

FIG. 15

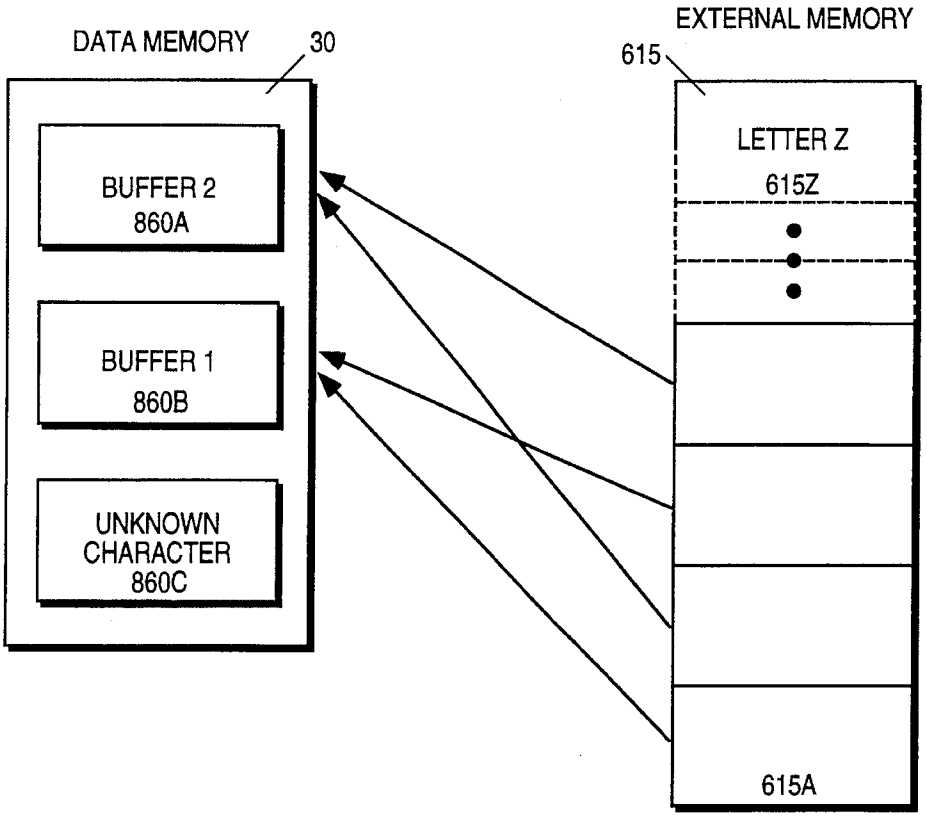
DATA MEMORY
30
BUFFER 2
860A
BUFFER 1
860B
UNKNOWN
CHARACTER
860C
EXTERNAL MEMORY
615
LETTER Z
615Z
615A

FIG. 16

# SYSTEM AND METHOD OF PATTERN RECOGNITION EMPLOYING A MULTIPROCESSING PIPELINED APPARATUS WITH PRIVATE PATTERN MEMORY

1. Related US Application

The present invention is a continuation in part of application Ser. No. 08/034,678 filed Mar. 19, 1993, entitled, "A Memory Transfer Apparatus and Method Useful Within a Pattern Recognition System" and assigned to the assignee of the present invention.

## BACKGROUND OF THE INVENTION

2. Field of the Invention

The present invention relates to the field of pattern recognition. Specifically, the present invention relates to the field of systems for pattern recognition particularly useful for voice and handwriting recognition applications.

2. Prior Art

The ability to store and accurately recognize patterns is a particularly good application for general computer systems. Computer systems offer the unique ability to process at high speeds specialized procedures that are developed for the field of pattern recognition. Using pattern recognition technology, a computer system can be advantageously utilized to respond to variable patterns of information (such as handwritten characters and voice) rather than rigid input devices, such as a keyboard input device. Using such technology, a computer system can be utilized to recognize visible patterns, such as pictures and video frame, or audible patterns, such as voice and other sounds, or movement patterns such as handwriting. It would be advantageous, then, to provide a computer system with an efficient mechanism for pattern recognition for handwriting and voice input applications. The present invention offers such capability.

Typically, a library of reference or prototype patterns may be stored within the memory storage devices of a general purpose computer system implemented by software for pattern recognition. Each library pattern is further composed of many individual points or states that, in total, comprise the pattern representation. These known library reference patterns are then individually compared against an input pattern also composed of a multitude of points or states. The general purpose computer systems of the prior art are programmed to individually compare, point by point, or state by state, the individual components of a particular reference pattern to the individual components of the input unknown pattern. This continues for each reference pattern in the library of patterns. For each pattern a match path is developed that indicates the level of identity between the unknown and the reference patterns. Reference patterns with good match paths are then selected by the computer system as candidates for a resultant match. The computer system then analyzes each of the reported candidates to determine which is best matches the unknown input pattern. During a comparison, since the reference patterns are each compared against the unknown, they are constantly accessed by the computer system. Prior art pattern recognition systems store the reference patterns in a memory array that is coupled to the computer system bus. When a pattern recognition procedure is operating the constant access of these reference patterns over the host system bus tends to interfere with, if not eliminate, other tasks that the computer system may perform. Therefore, it would be advantageous to provide a



pattern recognition system that eliminates this additional bus accessing to the reference patterns. The present invention allows such capability.

Heretofore, prior an systems for pattern recognition have typically been implemented using software techniques in general purpose computers. Although offering a good deal of flexibility, these general purpose computers do not offer the processing power and efficiency required to process the vast amount of data required for voice and/or handwriting recognition applications. In order to provide accurate and useful pattern recognition capabilities within a general purpose computer system, the reference library must contain a fair amount of reference patterns. Further, each reference pattern must contain a level of resolution to distinguish each individual known input. Moreover, since voice and handwriting samples may vary from person to person, each known reference pattern should contain a multitude of pattern variations. Each of the above limitations and requirements of a pattern recognition system require a great deal of computer processing capability. Prior an software systems simply to not offer enough processing power to allow a personal computer or desktop platform to realize accurate and useful handwriting and/or voice recognition applications. More processing power is needed to provide real-time accurate voice and/or handwriting recognition applications than the prior art can provide. Specifically, prior an computer systems that have pattern recognition procedures implemented primarily in software offer poor performance and do not readily provide rapid response time between an unknown pattern input and the resultant match output and are therefore not entirely user interactive.

General purpose computer systems offering pattern recognition capability are typically implemented within one of three levels of processing complexity. The first level of complexity (the lowest level) is programmed to recognize only patterns input according to a tight or ridged and predetermined format. For instance, these system recognize only handwritten letters if written within predetermined boxes on a predetermined format or voice input within predetermined timing windows. A second and higher level of complexity is system that can recognize a particular persons writing but does not require predetermined input boxes and may allow individual characters to touch or be cursive or natural. A third, and highest level of pattern recognition would recognize any written or spoken pattern that a person could otherwise recognize. As can be seen, each level of pattern recognition sophistication requires more processing power from the computer system. It would be advantageous to provide a system that could be used to interface with any of the systems as specified above to increase performance and accuracy of pattern recognition applications. The present invention offers such capability. Therefore, it would be advantageous to provide a system that could be interfaced with a general purpose computer, that would offer the power and efficiency for processing pattern recognition procedures while at the same offering the flexibility of a programmed general purpose computer system. It would further be advantageous to offer the above in a system specially optimized for voice and/or handwriting pattern recognition. The present invention offers such capabilities.

Accordingly, it is an object of the present invention to provide a pattern recognition system having the processing power and efficiency to realize real-time accurate pattern recognition procedures operating with general purpose computer systems. Further, it is an object of the present invention to provide such a pattern recognition system within a

personal computer or desktop platform or pen-based computer system. It is an object of the present invention to provide a pattern recognition system having the capability to process high resolution patterns and provide enough accuracy to allow meaningful pattern recognition of voice and/or handwriting input patterns in real-time applications. Moreover, it is an object of the present invention to offer the capability of interfacing with any general purpose computer system to increase its overall pattern recognition power and efficiency as well as increasing accuracy of pattern recognition and performance. It is yet an object of the present invention to provide a pattern recognition system that interfaces with a general purpose computer system whereby the present invention reduces the pattern recognition processing load of a central processing unit of the general purpose computer system thus freeing the general purpose computer system for processing of other tasks or higher level pattern recognition software tasks. It is yet another object of the present invention to provide a method and mechanism to reduce bandwidth requirements over a computer system bus resulting in accessing of reference patterns to free up the computer bus for other information or communication tasks.

## SUMMARY OF THE INVENTION

Embodiments of the present invention include a system for pattern recognition comprising: general purpose host computer system means comprising: a host bus means for providing communication within the general purpose host computer system means; central processor means for executing host instructions, the central processor coupled to the host bus means; and host memory means for storing host information, the host memory means coupled to the host bus means; and programmable multiprocessing means (which may be optimized for Dynamic Time Warping or Hidden Markov Models pattern recognition procedures) for executing pattern recognition instructions for comparing an unknown pattern against a plurality of reference patterns; the programmable multiprocessing means coupled to the host bus means; and private memory means coupled to the programmable multiprocessing means for storing a library of the plurality of reference patterns, the private memory means having at least one communication pathway to the programmable multiprocessing means that bypasses the host bus means wherein access of the private memory means by the programmable multiprocessing means does not necessarily increase information flow across the host bus means.

Further embodiments of the present invention include the above wherein the programmable multiprocessing means further comprises: two arithmetic pipelines for executing two arithmetic instructions in parallel; two pointer pipelines for executing two pointer instructions in parallel, each of the pointer pipelines for supplying pointer information for an associated arithmetic pipeline; and a control pipeline for providing instruction flow control for the pattern recognition procedures, and wherein the two arithmetic pipelines, the two pointer pipelines and the control pipeline operate in parallel to execute Very Long Instruction Words within the pattern recognition procedures.

Further embodiments of the present invention include the above wherein the programmable multiprocessing means further comprises: first internal buffer means for containing the unknown pattern and for containing at least one selected reference pattern of the plurality of reference patterns; second internal buffer means for containing results generated from the programmable multiprocessing means; and program storage means for containing instructions executed by the programmable multiprocessing means.

Further embodiments of the present invention include a computer implemented method of performing pattern recognition on an unknown pattern, the method comprising the computer implemented steps of: executing high level pattern recognition instructions by a host processor means; executing lower level pattern recognition instructions by a programmable multiprocessor means to compare the unknown pattern against selected reference patterns, the step of executing lower level pattern recognition instructions further comprising the steps of: executing arithmetic instructions by an arithmetic pipeline; and executing pointer instructions by a pointer pipeline in parallel with the step of executing arithmetic instructions; and communicating between the host processor means and the programmable multiprocessor means via a host computer bus means; and transferring the selected reference patterns from a private memory array to the programmable multiprocessor means, the step of transferring bypassing the host computer bus means.

Embodiments of the present invention include the above and further comprising the computer implemented steps of: transferring results of the programmable multiprocessor means over the host computer bus means to the host processor means; and identifying the unknown pattern based on the results of the programmable multiprocessor means, the step of identifying performed by the host processor means.

## BRIEF DESCRIPTION OF THE DRAWINGS

FIG. **1**(A) is an illustration of a lattice constructed between points of a reference pattern and points of an input unknown pattern during a Dynamic Time Warping pattern recognition procedure.

FIG. **1**(B) is an illustration of a lattice construction between states of a reference pattern and probability states of an input unknown pattern during a Hidden Markov Models pattern recognition procedure.

FIG. **2** is an overall block diagram of a computer system of the present invention utilizing a pattern recognition engine (with a private memory) for performing and reporting the results of pattern comparisons.

FIG. **3**(A) is a block diagram of pertinent components of a computer system of the present invention that utilize multiple pattern recognition engines for performing pattern recognition, each engine having separate memories.

FIG. **3**(B) is a block diagram of pertinent components of a computer system of the present invention that utilize multiple pattern recognition engines for performing pattern recognition, each engine sharing the same separate memory.

FIG. **4** illustrates an overall process flow of a pattern recognition procedure that has various tasks partitioned between a system central processing unit and a pattern recognition engine of the present invention.

FIG. **5** is a block diagram illustrating the major elements of pattern recognition engine of the present invention as well as the private off chip memory unit.

FIG. **6** illustrates a block diagram of the elements of the execution unit of the pattern recognition engine of the present invention.

FIG. **7** is a block diagram illustrating the two arithmetic pipelines, the two pointer pipelines, the data memories, pointer registers, and general purpose registers of the present invention.

FIG. **8** is a block diagram of an arithmetic pipeline of the

present invention.

FIG. **9** is a detailed block diagram of an arithmetic pipeline of the present invention.

FIG. **10** is an illustration of the interface of the pointer pipelines of the present invention to the arithmetic pipelines.

FIG. **11** is a detailed block diagram of a pointer pipeline of the present invention.

FIG. **12** is a detailed block diagram of the control flow pipeline of the present invention.

FIG. **13** is a detailed diagram of the program counter logic of the present invention.

FIG. **14** is a diagram of the internal logical functions of the memory to memory transfer unit and channel parameters of the present invention.

FIG. **15** is a state and event diagram illustrating the states and events of a memory transfer channel of the present invention.

FIG. **16** is a diagram illustrating a double buffering technique that can be employed by the present invention.

## DETAILED DESCRIPTION OF THE INVENTION

### I. Introduction

The present invention includes an apparatus and method for accurate and high performance real-time pattern recognition within a general purpose computer system that may be utilized for handwriting and voice recognition applications. The present invention includes a specially optimized multiprocessing hardware unit capable of performing, in parallel, a multitude of steps required for pattern recognition procedures, such as Dynamic Time Warping and Hidden Markov Models. The present invention multiprocessing hardware unit may interface with the address/dam bus of a general purpose computer system operating a high level pattern recognition procedure; the multiprocessing hardware unit (also called Pattern Recognition Engine, (PR)) executes the low level steps of the recognition procedure. The present invention provides a private memory array coupled to the PR engine for storage of reference patterns. The present invention may operate effectively on any general purpose desktop computer system or pen-based computer system, such as for example, a Macintosh™ platform available from Apple Computer Inc., of Cupertino, Calif. or an IBM or IBM compatible personal computer system or platform.

In the following derailed description of the present invention numerous specific details are set forth in order to provide a thorough understanding of the present invention. However, it will be obvious to one skilled in the art that the present invention may be practiced without these specific details. In other instances well known methods, apparatus, systems, components, and procedures have not been described in detail as not to unnecessarily obscure the present invention.

### II. DTW and HMM Pattern Recognition Procedures

As discussed above, the present invention may be particularly used within the field of pattern recognition of computer systems. Two well known procedures utilized by pattern recognition computer systems are described. These procedures are called Dynamic Time Warping and Hidden Markov Models. The present invention is optimized to operate these procedures in order to render pattern recognition. Therefore, the following is a discussion of the pertinent processing steps required for DTW and HMM procedures used for pattern recognition. It is appreciated that a full understanding of DTW and/or HMM procedures is not a requirement to understanding the elements of the present invention. In so far as the elements of the DTW and HMM procedures have driven the design of the present invention, these elements are discussed herein. It is noted that for additional background information regarding the well known DTW and HMM procedures used in voice and handwriting recognition, reference is made to: "An Introduction to Hidden Markov Models," by L. R. Rabiner and B. H. Juang, IEEE ASSP Magazine, January 1986; T. Parsons author of "Voice and Speech Processing," published by McGraw-Hill in 1987; "On line Handwriting Recognition—A Survey," by C. C. Tappert, C. Y. Suen, and T. Wakahara, IEEE, 1988; and C. C. Tappert, "Cursive Script Recognition by Elastic Matching," IBM J. Res. Develop. Vol. 26, No. 6, Nov. 1982.

Regarding FIG. **1**(A), there is illustrated a graphical representation of the two axis used in the Dynamic Time Warping (DTW) procedure used for pattern recognition. According to the DTW procedure, there are several reference patterns that are known and are placed into a reference library. One goal of the DTW procedure is to compare an unknown (input) pattern against the reference patterns of the library in order to locate a match between the unknown and the reference patterns. FIG. **1**(A) graphically illustrates the DTW procedure applied to one reference pattern against the unknown pattern. It is appreciated that the DTW procedure operates, as will be described herein, for each reference pattern in the library against the unknown pattern. Along the vertical axis are plotted points (from 1 to 9) that comprise a reference pattern that is stored in the reference library within a memory unit of computer system. Along the horizontal axis is plotted points (from 1 to 9) that comprise an unknown pattern that is compared by the computer processing system against the reference pattern. As each point of the unknown is compared against each point of the reference pattern, a lattice or array of points is generated within the two axis.

As each point is compared, a cost function is generated across the lattice that runs from left to fight across the lattice. A goal of the DTW procedure and the present invention is to locate the lowest cost path across the lattice for each reference pattern and compare the paths of each of the reference patterns in order to locate the best matched pattern to the unknown. Each point of the pattern has a given number of features. A classical feature of a point includes the spatial (x, y) coordinates of that point. DTW allows the computer system to locate the best way of distorting the unknown pattern to match the reference pattern at a minimum cost. The cost is called the distance between the unknown pattern and the reference pattern. The reference pattern for which the distance to the unknown is the lowest is the best candidate for a pattern match. The DTW procedure computes the lattice of points using well known Dynamic Programming techniques.

At each point of the lattice, two independent computations need be performed by the present invention. First, a local distance (d), must be computed between the associated point of the unknown pattern verses the reference pattern point. Secondly, the best path to get to the current point from the "neighbor" points must be determined. The two computations are performed in repetition during the DTW procedure. The independence between these two computations is the basic property used by the present invention to accelerate the DTW procedure. For example, the DTW procedure begins at the lower left side of the lattice (at point

6) and calculates upward along the first lattice line until the end (top) point is reached. Within the first vertical lattice line, the first point of the unknown pattern is compared against all of the points of the reference pattern. At the end of the first lattice line, the DTW procedure then starts at the second vertical lattice line (i.e., the line above unknown point **2** on the horizontal axis) and compares each of the reference pattern points against the second point of the unknown pattern and so forth down the lattice line for each unknown point.

For instance, at point **10**, the spatial feature of the fifth point of the unknown is compared against the fifth point of the reference pattern. Basically the (x, y) values associated with each of the points are subtracted from each other to yield the absolute value of the result. This is called the distance computation. Next, the DTW procedure examines the cost function of associated with each neighbor point to point **10**, these would be points **11**, **15**, and **14** which are some valid neighbors in this DTW example. The neighbor with the lowest cost function is then selected, say point **14**, and this value is then added to the distance value for point **10**. The path of the lowest cost (the best path) then includes the link point **14** to point **10**. As the lattice grows from left to fight the lowest cost path will be generated. The operation used the in DTW procedure to determine the best neighbor point is called the path function in these discussions.

As can been seen from this discussion a distance computation and a path computation are required for each point of the lattice for DTW processing. Each point of the unknown is compared against each point of the reference pattern generating a multitude of computations. Since there are no data dependencies between the best path computations and the distance computations for any individual point within the lattice, the present invention may perform these computations in parallel. Furthermore, each of the above two computations require pointers which indicate the locations of data used in the computation. The computations to update these pointers is also performed in parallel within the present invention. Therefore, the present invention is optimized to perform DTW processing in so far as there are separate arithmetic pipelines to perform the distance computation and to perform the best path computation. Also the present invention provides specialized instruction formats to process operations within the arithmetic pipelines used by DTW and HMM procedures. Further, there are separate pointer pipelines to perform the pointer updates for each arithmetic pipeline. Lastly, there is a separate control pipeline to perform control branchings between the operations of a DTW pattern recognition procedure. This will be further developed below.

Hidden Markov Models is another procedure utilized for pattern recognition. Refer to FIG. **1**(B). In a HMM, a letter, a word or sentence is modeled as a series of transitions from state to state along arcs. Each arc has an associated probability which gives the probability of the transition from one state to the next at the end of an observation frame. A set of probability density functions associated with each state gives the probability of the feature to have the different possible values. The unknown pattern is represented by an ordered set of states (1 to n), similar to those used by DTW. These states are represented along the horizontal axis of FIG. **1**(B). The known or reference pattern is also represented as a series of states along a vertical axis. Within each state of the reference is a probability density function that gives the probability that an input state (of the unknown pattern) will match that known state. The Viterbi scoring procedure computes the highest probability that a given set of observation points matches a reference pattern.

FIG. **1**(B) illustrates a typical HMM lattice of states. As an example, the HMM procedure first determines the probability that the unknown state **1** will be found within the probability distribution of the first state of the reference pattern (also state **1**); this is a local probability determination. The procedure then computes the probabilities that the unknown state **1** is within each of the other states of the test pattern (2 to n) along the first vertical lattice line of FIG. **1**(B) starting from the lowest state and sequentially processing lattice points. The second lattice line is then entered representing the second state of the unknown pattern. With reference to point **22**, the HMM procedure determines the local probability that state **2** of the unknown is within the probability density function of state **2** of the reference pattern; this is called the local probability of point **22**. Then the HMM procedure determines the probability that a transition will occur between point **20** and point **22** (p**1**), and the probability that a transition will occur between point **26** and point **22** (p**2**); these are the two paths to arrive at point **22**. Points **26** and **20** are the neighbor states of point **22**. The HMM then individually multiplies the values of p**1** and p**2** against the probabilities associated with each point **20** and **26** respectively to determine the highest probability neighbor of points **20** and **26**; this is the best path computation. Once that neighbor is selected, point **22** will adopt as its probability value the probability value of the neighbor (i.e., the neighbor's local probability) multiplied by the transition probability (from that neighbor to point **22**) times the local probability of point **22**. Again, a highest probability path is formed linking the selected neighbor and the point **22**. This continues through the lattice until the highest probability path is located for of all the reference patterns in the reference library. Each point of the unknown is compared against each state of the reference pattern.

As can be seen, in the HMM procedure at each lattice point two independent computations are required. First, the local probability for a point to be observed in a state of the reference pattern is computed. Second, the best path to get to that point from the neighbor points must be computed, as another probability function. If the above computations are done on a logarithmic scale, the multiplication operations become addition operations on exponential values. In this case, the above computational operations of the HMM procedure resemble the DTW procedure operations. The present invention takes advantage of this similarity and the fact that the required operations for each lattice point are independent of each other. Since there are no data dependencies between the best path probability computations and the local probability computations for any individual point within the HMM state lattice, the present invention may perform these computations in parallel. Furthermore, each of the above two computations require pointers which indicate the locations of data used in the computation. The computations to update these pointers are also performed in parallel within the present invention. Therefore, the present invention is optimized to perform HMM processing in so far as there are separate arithmetic pipelines to perform the local probability computation and to perform the best path probability computation and the arithmetic pipelines have specialized instruction formats. Further, there are separate pointer pipelines to perform the pointer updates for each arithmetic pipeline. Lastly, there is a separate control pipeline to perform control branchings between the operations of an HMM pattern recognition procedure. This will be further developed below.

III. Overall Computer System of the Present Invention

A. System Components (Hardware)

An embodiment of the present invention may be advantageously utilized within a standard computer system **500** optimized for pattern recognition by a specialized multiprocessor. The computer System **500** having a common system bus **100** as illustrated in FIG. **2**. In general, such general purpose computer systems used by the preferred embodiment of the present invention comprise a bus **100** for communicating information, a central processor **510** coupled with the bus for processing information and instructions, a random access memory **512** coupled with the bus **100** for storing information and instructions for the central processor **510**, a read only memory **514** coupled with the bus **100** for storing static information and instructions for the processor **510**, a data storage device **516** such as a magnetic or optical disk and disk drive coupled with the bus **100** for storing information (such as audio or voice data) and instructions, a display device **518** coupled to the bus **100** for displaying information to the computer user, an alphanumeric input device **520** including alphanumeric and function keys coupled to the bus **100** for communicating information and command selections to the central processor **101**, a cursor control device **521** (such as a mouse) coupled to the bus for communicating user input information and command selections to the central processor **510**, and a signal generating device **522** coupled to the bus **100** for communicating command selections and data to the processor **510**.

In the present invention the signal generation device **522** may include, as an input device, a microphone and a analog to digital converter (digitizer) for capturing sounds into analog signal form and transforming those sounds into digital data which the general purpose computer system may process. The signal generator **522** also includes an mechanism for isolating unknown sound segments from the sampled digital data and storing those unknown sound segments into a memory unit such as RAM **512**. These sound segments are one type of unknown pattern that the present invention will process in order to recognize. The signal generator **522** may also include a stylus and specialized pad for input of handwriting information (which is an analog communication signal representing the movement of the stylus with reference to the pad by a user hand) to a digitizer so that handwritten data may be input to the computer system **500** as well. Digitizers typically sample the position of the pen **200** times a second. The positions of the pen are coded in two bytes, one for the x position and one for the y position in a two coordinate (x,y) Cartesian system. The digitizer also provides information to indicate when the pen is up, when the pen is down and other proximity information for a total of about 12 bytes of information. This creates a bandwidth of 400 to 1200 bytes/second which can be processed by a serial interface to the system bus **100**. This digitized handwriting information may also be segmented and stored into a memory unit, such as RAM **512**. These digitized and input segments are one form of unknown pattern that the present invention will analyze in the pattern recognition procedures. It is appreciated that mechanisms for digitizing audio signals and for inputting stylus information and digitizing same are well known and that any of such mechanisms may be advantageously used within the elements present invention to gather an unknown input pattern for recognition.

The display device **518** utilized with the computer system **500** of the present invention may be a liquid crystal device, cathode my tube, or other display device suitable for creating graphic images and alphanumeric characters recognizable to the user. The display device also includes a video graphics controller or VGA coupled to the ISA bus **100** and also coupled to a output frame buffer for display of images and text. The cursor control device **521** allows the computer user to dynamically signal the two dimensional movement of a visible symbol (pointer) on a display screen of the display device **518**. Many implementations of the cursor control device are known in the art including a trackball, mouse, joystick or special keys on the alphanumeric input device **520** capable of signaling movement of a given direction or manner of displacement.

The computer system **500** as shown in FIG. **2** utilizes a system bus **100** that adheres to the well known 5 volt ISA computer bus format. Therefore, reference to a system bus **100** throughout this present discussion may be interpreted as utilizing the ISA standard computer system bus. The preferred embodiment of the present invention also contains a pattern recognition system (engine) **525** capable of executing sections of program code shared between the CPU **510** that compare reference patterns against an unknown pattern to locate candidate reference patterns for match. The pattern recognition engine (also called a multiprocessing unit) is located coupled to the bus **100** and is programmable. The pattern recognition system (Pattern Recognition Engine) **525** is composed of two arithmetic pipelines **38** and **40** as well as two pointer pipelines **34*a*** and **34*b*** as well as on-chip memory units, register files and other associated control hardware **510** that will be described in greater detail to follow. Coupled to the pattern recognition engine **525** via dedicated bus **616** is a private memory unit **615** for storage of library reference patterns. Although embodiments of the present invention may store the library patterns within the common RAM **512**, the preferred embodiment of the present invention stores these library entries within the private memory **615**. The private memory **615** is about 512 kilobytes in size, but configurations from 64 kilobytes to 16 megabytes are supported, and in fact any size memory capable of containing reference patterns is consistent with the present invention. It is appreciated that memory **615** communicates with PR engine **525** over line **616** and not the host communication bus **100**. This reduces bandwidth requirements of the communication bus **100**.

It is appreciated that the present invention may have particular advantageous use within a pen based personal computer system, and therefore the computer system **500** may be construed to include pen-based personal computers that utilize a pen (stylus) and pad for data input from the user interface, as discussed above.

In a typical pattern recognition scenario, the coordinates captured by the digitizer from a stylus are preprocessed by the CPU **510** and normalized features are sent to the pattern recognition engine **525** of the present invention over communication bus **100**. The pattern recognition engine **525** would execute the comparisons between the unknown pattern and all the prototype patterns stored in the library in its private memory **615** utilizing private bus **616**.

FIG. **3**(A) and FIG. **3**(B) illustrate system embodiments of the present invention that are utilized for applications that require more performance than that offered by a single pattern recognition engine (PR engine) **525**. Such an application may include high speed speech recognition which uses the HMM algorithm for which the present invention is additionally optimized. When more than one PR engine is required, the system architecture of the present invention may adopt at least two different models which are repre-

sented by FIG. 3(A) and FIG. 3(B). One model has each PR engine **525***a*–**525***c* interfaced with its own private memory **615***a*–**615***c* and the other model has each PR engine interfaced with a common memory **615**. The CPU **510** is responsible for splitting the processing work from among the separate PR engines in the former case while the synchronization is accomplished by the PR engines themselves in the latter case.

Refer to FIG. 3(A) which illustrates the former case. The pertinent components of the computer system **500** are illustrated. The host CPU **510** is coupled to the host communication bus **100** as well as the computer memory **512**. Also coupled to the bus **100** is an input pattern block **522** which comprises a stylus input, an analog to digital converter and an I/O controller all for inputting and temporarily storing the unknown handwriting sample. The unknown input pattern may be temporarily stored in memory array **512**. It is appreciated that block **522** can be utilized to input a voice sample by substituting a microphone input data stream for the stylus input. Them are also n number of PR engines, **525***a* to **525***c*, each independently coupled to the ISA bus **100**. Each PR engine contains its own library of prototype patterns **615***a* to **615***c* respectively. The CPU may input up to n separate unknown patterns from block **522** during a single recognition processing cycle, a separate unknown would be sent to each PR engine over bus **100**. Each PR engine would then compare the received unknown against the library of patterns within the private memories using buses separate from bus **100**. This occurs in parallel. Results would then be indicated to the CPU **510** which would then select the best matched candidates. Alternatively, the same unknown could be transferred to each PR engine and each PR engine could compare (in parallel) the unknown to separate sections of the prototype library. Refer to FIG. 3(B) which illustrates the system substantially as described with reference to FIG. 3(A) bus wherein each separate PR engine shares the same prototype library **615**.

### B. DTW and HMM Procedure Partitioning (Software)

According to the present invention, the pattern recognition procedure that must be executed by the computer system **500** may be partitioned or shared between the CPU **510** and the pattern recognition engine **525**. The pattern recognition engine **525** is delegated the lower level tasks of computing much of the inner loop calculations to determine prototype pattern candidates for a match to a particular unknown pattern. Therefore, the PR engine **525** performs the point by point distance computations and best path determination for each reference pattern against the unknown pattern. Upon completing these tasks, the results are then reported to the host CPU **510** via an interrupt generation which signals to the CPU **510** the completion of the PR engine processing or a bus signal one bus **100** may be generated. The CPU **510** then records the best path information for each reference pattern and will select the ultimate match candidates from the information supplied to it by the PR engine **525**. It is appreciated that the CPU is performing higher level scheduling, synchronization and result determination steps of the HMM and DTW pattern recognition procedures that are not processing intensive while the PR engine **525** performs the bulk of the lower level processing intensive aspects of these procedures. When used this combination, the CPU **510** and PR engine **525** of the present invention system provides an extremely flexible, powerful and accurate mechanism for pattern recognition, including handwriting and voice pattern identification while allowing the CPU **510** to perform other system tasks that may not be related to pattern recognition. To this extent, the PR engine **525** of the present invention may be coupled with any general purpose computer system to increase that computer system's accuracy and performance regarding pattern recognition applications. It is appreciated that the present invention is able to provide the above functionality in a real-time response of at most 0.1 seconds between unknown pattern input and pattern identification, thus providing a system that is fully user interactive.

More specifically, recognition procedures include three major processing steps: 1) a preprocessing or feature extraction and normalization step; 2) a search and match step; and 3) a post processing and final decision step. The most processing intensive functions are the lower level search and match step where up to 90% of the computation time will be consumed. The PR engine **525** of the present invention is optimized for the search and match step of the above procedure and assumes that the pre-processing and post-processing steps are accomplished by the CPU **510**. It is appreciated that because memory **615** is not coupled on host bus **100**, during lower level processing the CPU and host bus are not tied up doing PR processing but may perform unrelated tasks.

A typical pattern recognition flow for either HMM or DTW processing is shown in the process flow of FIG. **4** which illustrates the software partitioning. At block **400**, the process begins and an unknown pattern is prepared for processing. At block **401** the digitizer sends stylus inputs to the CPU **510** or RAM **512** through a serial port. The digitizer has a sampling rate of about 200 pairs of coordinates per second. Each coordinate is a byte of data, so this represents a bandwidth of about 400 bytes per second. At block **402** the main CPU pre-processes the coordinates and sends a normalized set of features to the PR engine **525** over bus **100**. This represents a block transfer of data of 100 to 200 bytes every 100 milliseconds. Normalization is required for effective processing of the PR engine. Next at block **403**, the CPU **510** indicates to the PR engine **525** the selected reporting scheme for the results of the PR engine. If the CPU **510** wants a report generated at the end of each prototype reference comparison then block **404** is run. Otherwise, block **405** is executed where the PR engine **525** only reports the results of each prototype comparison at the end of the total library. Results are signaled to the CPU by the PR engine via an interrupt generated by the PR engine or directly over bus **100**. Within blocks **404** and **405**, the PR engine **525** computes the lattices, representing the comparison of the unknown pattern or character with each reference model stored within the library. This involves memory transfers from the library memory **615** to the PR engine **525**. When the CPU receives the interrupt from either blocks **405** and **404** indicating a match complete, it generates a transfer of the results from the PR engine to the system memory **512**. Then, at block **406** the CPU post-processes all of the results generated by the PR engine and formulates a final match prototype pattern based on the prototype candidates selected by the PR engine. The CPU then may report the match to a computer user via the display unit **518** or other output device or will use the result internally. At block **407**, the CPU checks if there are more unknown patterns to process and if so will return to block **400** or otherwise exit the pattern recognition flow via block **408**. Specifically, it is appreciated that blocks **401** and **402** and **406** are considered high level processing tasks while blocks **404** and **405** are considered lower level processing tasks. It is appreciated that the

program examples presented herein to follow are performed within blocks **404** and **405** of the present invention.

C. Communication Interface between a PR Engine and CPU

The PR engine **525** is a component attached to the ISA bus using standard ISA bus cycles. It communicates with the main CPU **510** through index and data registers, mapped in the ISA memory or I/O space. The main CPU **510** accesses the PR engine private memory **615** through these, the same way the 386 SL accesses the 82360SL configuration space, for example. The PR engine **525** interfaces with the private memory **615** which holds all the prototype patterns. The private memory is loaded with the reference patterns at rest time from the disk drive unit **516** under the control of the CPU **510**. This memory unit can also be updated under the control of the CPU when new prototypes are learned. Communication between the CPU **510** and the PR engine **525** of the present invention may be carried out based on any number of well known conventions. However, the preferred embodiment of the present invention utilizes an interrupt based system along with specially indexed registers. Appendix B illustrates the memory map of the present invention.

IV. Pattern Recognition Engine **525**

A. Overview of Components of Pattern Recognition Engine

The pertinent components of the pattern recognition engine **525** (programmable multiprocessor) are illustrated in FIG. **5**, which except for the external memory **615** are located within a single chip package. FIG. **5** also illustrates the communication bus architecture shared between the components of the PR engine **525**. Each pattern recognition engine contains: a program memory **415**, two data memories **30** and **32**, a memory controller **419**, a memory to memory transfer block **416**, a VLIW execution block **417** and a system bus interface block **418**. It is appreciated that any of the well known system bus interface technologies may be utilized within the present invention PR engine. The execution unit **430** is comprised of program memory block **415**, data memories **30** and **32** and VLIW execution block **417** as well as other elements to be described below. Interfaced to each PR engine **525** is a private memory block **615** as discussed above. The system bus interface **418** is coupled to the ISA system bus **100**. Each of the above blocks, where pertinent to the discussions of the present invention, will be described in greater detail to follow. It is appreciated that the program memory **415** may be loaded with the lower level procedures by the CPU **510** directing transfers from the disk **516** or RAM **512**.

There are seven different communication buses **870–876** allowing communication between the different units of the PR engine **525**. There is only one possible driver for each bus, there can be several destinations. The system bus interface unit **418** writes the channel parameters using the SBI-Write bus **870** and reads these parameters using the SBI-Read-Para bus **874**. Note that the SBI unit **418** is the only unit which drives the SBI-Write bus **870** and the memory to memory transfer unit **416** is the only driver of the SBI-Read-Para bus **874**. All data returning from memory cross the memory bus **871** which is distributed to all units. The unit which has requested the returning dam reads it from the memory bus. The memory bus **871** is only driven by the memory controller **419**. The memory bus is also indicated as bus **110**. Bus indications **115** to or from the memory to memory transfer block **416** may refer to buses **876**, **874**, **870**, or **873** accordingly, depending on the discussion. It is appreciated that bus **875** is the SBI read execution unit bus. Bus **876** is the execution unit read bus. Bus **872** is the channel write memory bus. Bus **870** is the SBI write bus.

Refer still to FIG. **5**. From the execution unit **430** standpoint, it is important to notice that the following transfers can occur in parallel: 1) receive a read or write request from the system bus interface **418**; 2) send data to the memory controller **419** for a memory to memory transfer, 3) send a load or a store request to the memory controller **419**, or send a read or write request to the channel parameters of the memory to memory transfer unit **416**; or 4) receive returning data from memory, results of external load instructions or results of a memory to memory transfer operation.

The VLIW execution unit **417** of the present invention is a 16 bit engine and executes only integer computations since floating point is not required by the DTW and HMM algorithms. There are five pipelines in the execution unit which can execute three types of instructions which are ALU instructions, pointer instructions and control flow instructions. There are two arithmetic pipelines, two pointer pipelines and one control flow pipeline. The five pipelines may be controlled in parallel with one Very Large Instruction Word which is 80 bits in width. Instructions are stored in the program memory **415** which is a 256×80 bit memory unit which must be loaded before a program starts, from the off-chip memory unit **615** or from the disk drive **516** or from the CPU memory unit **512**.

The off chip private memory **615** contains the prototype or reference patterns for comparison during pattern recognition procedures. In the preferred embodiment of the present invention handwriting recognition system, this memory contains patterns information regarding reference symbols that would be located on a typical keyboard, such as alphanumeric symbols, punctuation and other function and specialized keys. Also contained within this memory **615** are a predetermined number of variations for each symbol. During a pattern recognition procedure, this data is loaded, typically a symbol at a time from the off-chip memory to the PR engine **525** via memory to memory transfers over dedicated bus **616**.

It is important that the off chip private memory is not coupled to the general system bus **100**, but is rather coupled to the PR engine **525** via a separate bus **616**. This is the case so that the memory to memory transfers that occur during normal pattern recognition procedures do not contribute to the bandwidth of data located on the system bus **100**. Thus, the data transferring along bus **616** is separate from the system bus **100**, it does not interfere with or slow down the host CPU **510** or the remainder of the computer system **500** from performing other tasks. This allows the computer system **500** of the present invention to operate more efficiently. The host CPU **510**, therefore, does not compete with the PR engine **525** for bus accessing privileges with respect to the data traversing bus **616**.

Referring to FIG. **5**, the memory controller of the present invention, block **419**, interfaces the PR engine **525** with the off-chip private memory **615**. The memory controller supports both SRAM and DRAM memory chips and performs the required interface for memory transfers between the PR engine **525** and the private memory **615**, including timing functions, pulsing of RAS and CAS signal lines as well as other well known RAM interface signals. The memory controller also performs memory access arbitration for memory access requests between the elements of the PR engine and the private memory **615**. In the case of the

SRAM, the number of wait states is programmable within the memory controller unit. In the case of DRAM, different timings and fast page modes are supported. When DRAMs are used, the PR engine executes refresh on request by activation of a refresh pin. The memory controller **419** supports a beak bandwidth of 50 megabytes per second at 25 MHz which required for cursive handwriting recognition applications.

The present invention contains two memory to memory transfer channels within block **416**. These channels are dedicated to data transfers internal to the PR engine memory space. The memory space addressed to the PR engine **525** is shown in Appendix B. These channels control data transfers between one of the on-chip memories (**30** and **32**) and the off-chip memory **615**. Each channel is composed of a 32 bit external address, a 16 bit internal address, a 16 bit count, and a 16 bit control word. The control words specify whether a transfer is a read or a write operation of the on chip memory, and whether the transfers must be chained with another transfer. The control word also allows the CPU **510** or the PR engine **525** to abort a memory to memory transfer. The two PR engine channels can be chained together. This means that the two transfers occur back to back without intervention from the CPU or the execution unit of the PR engine. It is appreciated that only one channel can be active at a time within the present invention. Therefore, one transfer between the on-chip and the off-chip memory can be executed in parallel with a program running in the execution unit of the PR engine. Completion of a transfer in any channel generates a done signal that may be polled. There is one specific signal per channel. These signals are programmer visible and can be tested by the program running in the execution unit, see Appendix B.

The system bus interface block **418** performs data transfers between the CPU **510** and the PR engine **525**. It is appreciated that any number of ISA interface technologies may be utilizes within the present invention. A discussion of the interface utilizes by the present invention is presented to follow. These transfers are always done under the control of the CPU **510**. The PR engine is a slave on the system bus in the preferred embodiment of the present invention. This interface also allows the PR engine to send interrupts to the CPU. Interrupts are typically used to indicate completion of a lattice to the host CPU **510** and are used to signal the host CPU **510** to read the results of the PR engine. Interrupts are also sent by the PR engine **525** to the host CPU **510** in case of detection of an error or exception. The present invention supports a 5 volt ISA bus interface. The system bus interface block **418** includes a 32 bit index register and a 16 bit data register for scalar transfer and a 32 bit auto-increment address register and a 16 bit data port register for block transfer operations; these are the communications registers. These registers are to be mapped into the ISA memory or I/O space. All registers and memories of the PR engine are mapped into the private memory space of the PR engine, which includes: memory **615**, the on-chip memories, **30**, **32**, the program memory **415** and the registers, see Appendix B. This allows the CPU to have access to the complete context of the PR engine **525** through the index and data registers.

Referring to FIG. **5**, it is appreciated that the communication registers of the system bus interface **418** are memory mapped in the ISA memory space, however, embodiments of the present invention could also map these addresses in the memory space or the I/O space. Mapping in the memory space allows zero wait state bus cycle and offers a better bandwidth out of the ISA bus over I/O mapping. The PR engine **525** accepts a chip select input and assumes that the address decoding is accomplished off chip. The only address inputs seen by the PR engine are 3 bits of the system address bus used to access the different communication registers. The PR engine **525** of the present invention supports three types of bus cycles: 1) a standard 16 bit ISA read or write cycle. This is a 3 cycle transfer (one wait state), which can be used for ISA memory read or write, or for ISA I/O read or write; 2) extended 16 bit ISA read or write cycle which is a more than one state transfer which can be used for extended ISA memory read or write, or extended ISA I/O read or write; and 3) a 16 bit zero wait state read or write which is disabled by default. According to the last cycle type, if enabled in the mask register, these cycles are used for zero wait state ISA memory read and write transfers by the present invention.

According to the operation of block **418** of the present invention, for transfers of single words (scalar transfers) the PR engine **525** has three communications registers that can be read or written from the system bus. These are two index registers and a scalar data register. All three registers are 16-bits wide. The two index registers hold an address in the PR engine private memory space. Reading the scalar data register means reading the data located within the address specified by the index registers. Writing the scalar data register means writing the data at the address specified by the index register. Typically the CPU **510** writes the two index registers with the two components of the PR engine address that it wants to access (PR engine addresses are 32 bits wide). If the CPU **510** wants to execute a read of the addresses specified in the index registers, it then reads the scalar data register and the PR engine **525** provides the required data. If the CPU **510** wants to execute a write of the address specified in the index registers, it writes the scalar data register and the PR engine **525** executes the write operation.

Refer to FIG. **5**. To optimize transfers of block of data the PR engine **525** supports block transfers within the system bus interface **418**. These allow the CPU **510** to eliminate generating successive addresses and to only have to read or write data from or to a data port. Block transfers are implemented with three additional communication registers: 1) an auto-increment low address; 2) an auto-increment high address; and 3) a data port, all located within block **418**. These three communication registers are ISA mapped and can be accessed directly from the system bus **100**. Two 16 bit words need to be initialized to used a block transfer between the PR engine **525** and the CPU **510**. These are the high and low start address within the PR engine memory space. This address is loaded in the ISA mapped auto-increment address register. Once the start address of the block transfer is initiated, the CPU **510** only has to read or write the data port register as many time as there are words in the transfer. Every time the host CPU reads or writes the data port register, the PR system interface **418** increment the auto-increment address to the next word address. The start address is a byte address so it is incremented by 2 after each access to the data port register.

The present invention system performance is set to recognize a handwritten character within 100 milliseconds for discrete run-on handwriting. This is selected because this rate is considered to be immediate in an interactive mode. It is important to provide immediate interaction with a user when handwritten characters are commands, for example, or when editing a text. For cursive handwriting the target response time is 300 milliseconds which corresponds to 3 characters per second which is the average number that a typical person can generate. For run-on discrete handwriting

the present invention utilizes 250 reference patterns within the library in memory **615** which allows for three variations of each symbol normally represented in a keyboard layout. Within run-on discrete handwriting recognition procedures the lattice size is about 20×20 points and the performance is approximately 2 million points per second for pattern recognition.

For cursive handwriting, shapes depend on preceding and following letters thus increasing the required number of prototypes to 750 reference patterns within the present invention. To recognize cursive handwriting, the lattice size is 40×40 and the performance is approximately 4 million pointers per second processed. One possible trade-off of the present invention to be able to support more references and still achieve real time response is to reduce the number of points representing references and observation sequences. The computation power required by the DTW and HMM procedure is proportional to the number of references and to the square of the number of points in the observation sequence. For a system of the present invention with three features per observation point and three neighbors per lattice point, cursive recognition requires about 100 million operations per second. Therefore, the present invention PR engine **525** is specially optimized for DTW and HMM procedures and may simultaneously execute instructions within two arithmetic pipelines and two pointer pipelines to achieve the above processing power requirements while executing memory to memory transfers in parallel as well.

## V. Execution Unit 430 of the Pattern Recognition Engine 525

### A. Overview of Components of Execution Unit 430

FIG. **6** is a block diagram of the execution unit **430** of the present invention and as discussed above the execution unit comprises the VLIW execution block **417**, data memories **30** and **32** as well as program memory **415** as well as other units presented herein. Referring to FIG. **6**, execution unit **430** specifically comprises write buffer **452**, program memory **415**, instruction buffer **453**, control unit **454**, pointer pipelines **34***a* and **34***b*, instruction decoder **456**, local data memories **30** and **32**, and arithmetic pipelines **38** and **40**. The input to write buffer **452** is coupled to the off-chip memory **615** (over bus **616**). The output of write buffer **452** is coupled to program memory **415**. Program memory **415** is also coupled to receive an output from control unit **454**. Instruction buffer **453** is coupled to receive an output from program memory **415**. The output of instruction buffer **453** is coupled to instruction decoder **456**. Pointer pipelines **34***a* and **34***b*, local data memories **30** and **32**, arithmetic pipelines **38** and **40**, and control unit **454** are all coupled to receive outputs from instruction decoder **456**. Pointer pipelines **34***a* and **34***b* are also coupled to local data memories **30** and **32** for providing addresses to local data memories. Local data memories **30** and **32** are also coupled to arithmetic pipelines **38** and **40** for exchanging data. Local dam memories also receive and send data to off-chip memory **615**. Control unit **454** is also coupled to receive an output from the arithmetic pipelines. It should be noted that the lines depicted in FIG. **6** may represent more than one conductor.

Program memory **415** stores the instructions of the application to be executed by the execution unit of the present invention; as discussed above these are the lower level - , instructions of the partitioned pattern recognition procedure. Program memory **415** is loaded with the instructions from off-chip memory via write buffer **452**. Instructions are read out of program memory **415** and routed to instruction buffer **453**. Instruction buffer **453** holds the multiprocessor instructions and, in conjunction with instruction decoder **456**, decodes the instructions, sending the commands to the different pipelines (i.e., pointer pipelines, arithmetic pipelines, and the control unit). In other words, control instructions are sent to control unit **454**, pointer instructions are sent to pointer pipelines **34***a* and **34***b*, and arithmetic instructions are sent to arithmetic pipelines **38** and **40**. In the currently preferred embodiment, control flow pipeline **454** executes control flow instructions. The pointer pipelines **34***a* and **34***b* generate addresses of operands and results in data memories **30** and **32**. In the currently preferred embodiment, arithmetic pipelines execute integer operations using operands from the general purpose registers **36** and data memories. It is appreciated that the program memory **415**, the data memory **30** and the data memory **32** are called internal buffers.

Since there are two instruction formats in the currently preferred embodiment (i.e., an 80-bit format and a 40-bit format), instruction buffer **453** must extract the instruction fields from the lines of program memory **415** according to the proper format. In the present invention, instruction buffer **453** and instruction decoder **456** use multiplexers to separate and decode the individual control, pointer and arithmetic instructions, such that they can be distributed to their respective pipelines.

Referring still to FIG. **6**, from the control flow instruction, instruction decoder **456** provides the read and write addresses of the control register file, the source and destination operands for the control flow pipe operator, the opcode for the control flow operator, indications regarding whether to write to the program counter, and instruction decoder **456** provides flag selection.

In the currently preferred embodiment, arithmetic pipelines **38** and **40** comprises two identical arithmetic pipelines. Arithmetic pipelines **38** and **40** utilize local data memories **30** and **32** respectively and a general purpose register file **36** to perform data computations (i.e., arithmetic operations). In the currently preferred embodiment, these data computations correspond to the application of handwriting recognition routines to input data via DTW and HMM pattern recognition procedures. According to alternative embodiments of the present invention, these data computations correspond to the application of speech and voice recognition routines to input data via DTW and HMM pattern recognition procedures. In the currently preferred embodiment, all operations are accomplished with 16-bit operands and results, with the exception of the multiply operation which produces a 32-bit result. Furthermore, all arithmetic operations within an instruction are executed in a single cycle (instruction clock cycle).

Pointer pipelines **34***a* and **34***b* provide the addresses of operands and results in data memories **30** and **32** respectively. In the currently preferred embodiment, data memories comprises two separate memories **30** and **32** and pointers pipelines comprise two pointer pipelines **34***a* and **34***b*, one for each data memory in local data memories. Pointer pipelines also execute arithmetic instructions on the pointers.

Referring still to FIG. **6**, control unit **454** comprises the control flow pipeline of the present invention. The control flow pipeline executes the control flow instructions. In the currently preferred embodiment, all control flow instructions are executed in a single cycle. The control flow pipeline is completely independent of the pointer pipelines and the

arithmetic pipelines in that the control flow pipeline has its own register file, containing control registers and its own arithmetic operator for performing simple operations, such as addition and subtraction on the control registers, and its own flags. The control flow pipeline also contains the program counter. In prior art systems, the control flow instructions and loop maintenance is accomplished using the arithmetic pipelines due to the dependencies which occur between the data computations and the loop maintenance and/or branch instructions. Due to the independence between the data computations and the control flow operations in the handwriting recognition algorithms performed by co-processor of the present invention, the control flow instructions and loop maintenance instructions do not rely on the data computations performed by the arithmetic pipelines. Therefore, the control instructions may be executed separately from the data computations performed by the arithmetic pipelines. By operating separately, the control flow pipeline of the present invention may operate in parallel with pointer pipelines and arithmetic pipelines.

B. Arithmetic/Pointer Pipelines of the Execution Unit **430**

With reference to FIG. **7**, an overall logical system diagram of the present invention arithmetic pipeline and pointer pipelines is illustrated within the environment of the pattern recognition engine **525**. The details of the components illustrated in the system diagram will be further described in discussions to follow. There are two identical arithmetic pipelines **38**, **40** and two identical pointer pipelines **34***a* and **34***b* illustrated. According to the present invention, two data memory units **30** and **32** are utilized. These memory units contain the immediate pattern data of the unknown pattern and reference pattern that will be processed, point by point, by the present invention as well as other lattice information for each processing point within the DTW and HMM procedures. These memory units are RAM units and contain 256 entries by 16 bits wide each; however, such specific configurations of the present invention may be altered to accommodate various programming implementations and stay within the scope of the present invention.

Both memory units **30** and **32** are coupled to a separate pointer pipeline **34***a* or **34***b* which supplies two separate designated pointer pairs (Pta and Ptb) from each pointer pipeline which are used to reference entries of the memory units **30** and **32**. Each pointer pipeline provides the address of operands and results for each data memory separately. Pointer pipeline **34***a* addresses data memory **30** while pointer pipeline **34***b* supplies pointers to address data memory **32**. The memory units are each associated with a separate arithmetic pipeline; memory unit **30** with arithmetic pipeline **38** and memory unit **32** with arithmetic pipeline **40**. Each of the memory units have dual read channels and one write channel. Each memory is able to provide two operands to an associated arithmetic pipeline and write a result from the associated arithmetic pipeline or from a memory transfer every cycle. Therefore, each memory has two data output channels and one data input channel. The data input channel for each memory is multiplexed between a system bus **100**, a memory bus **110** and the output of an accumulator of an associated arithmetic pipeline.

More specifically, memory unit **30** of the present invention has two 16 bit read output channels **35**, **44** which are fed to two input channels of arithmetic pipeline **38** to supply two operands to the distance arithmetic pipeline **38**. Arithmetic pipeline **38** is a pipeline that can perform, among other functions, the distance computations that were referred to above with reference to the DTW and HMM procedures. The output of arithmetic pipeline **38** is fed to the write input of memory **30** via line **55** to supply the memory with the result of the arithmetic pipelines computation or can be written into the register file **36**. One pointer pipeline **34***a* is also coupled with memory **30** to supply the two pointers (Pta and Ptb) which are coupled to the read address lines of memory **30** and which address the contents of memory **30** to output operands over the output channels coupled to the arithmetic pipeline **38**. Pointer, Pta, is input over line **220** and pointer, Ptb, is input over line **225**. The system bus **100** and the memory bus **110** are also coupled to the input write channel of memory **30**. A general purpose register file **36** is also coupled to one input of the arithmetic pipeline **38** via line **37** in order to deliver the contents of one of the registers (Regf) to the arithmetic pipeline **38** in the form of an operand. The contents of line **37** and **35** are multiplexed into the corresponding arithmetic pipeline input. The output of the arithmetic pipeline **38** is also input to the general purpose register file **36** via line **55** to supply a register designated as Regd. The memory bus **110** is also communicatively coupled with the general purpose register file **36**. It is appreciated that according to the present invention, the memory **30** is uniquely coupled to the arithmetic pipeline **38** that can perform the distance computations. Pointers Pta and Ptb control the accessing of memory **30** to output corresponding values over output channels **35** and **44** to supply arithmetic pipeline **38**.

Similarly, with reference to FIG. **7**, memory **32** is associated with arithmetic pipeline **40**. Arithmetic pipeline **40** of the present invention performs the best path computations as described above for the DTW and HMM procedures. The system bus **100**, the memory bus **110**, and the output of the accumulator of arithmetic pipeline **40** over line **56** are multiplexed into the write input of memory **32**. The two read address inputs of memory **32** are coupled to two pointers supplied over lines **53** and **54** from the other pointer pipeline **34***b*. These pointers are not the same pointers that index memory **30** since they are generated by different pointer pipelines. A read channel output **39** is coupled to an input of the arithmetic pipeline **40**. The other read channel output **42** is coupled to the other arithmetic pipeline **40** input and multiplexed with an input line **41** that coupled with the general register file **56**. It should be noted that the pointer values associated with both line **220** and **225** are multiplexed to the write address channels of the memories **30** and pointer values **53** and **54** are multiplexed to the address channels of memory **32**.

According to the system diagram of the present invention as shown in FIG. **7**, them are two arithmetic pipelines, one arithmetic pipeline **38** for computing the distance functions and one arithmetic pipeline **40** for computing the best path. The distance pipeline, or arithmetic pipeline **38**, receives operands from the data memory **30** or from the general purpose register file **36** (as Regf) and writes results in the memory **30** or into the general purpose register file into the register identified as Regd. The best path pipeline, arithmetic pipeline **40**, receives operands from data memory **32** or the general purpose register file **36** and writes results into memory **32** or into the general purpose register file **36**. Although the two arithmetic pipelines work with different memory units, they can exchange data through the common general purpose register file **36**. Within the register file **36**, there are 16 general purpose registers that are 16-bits wide each. Addresses of operands or results to be read out or written into the data memories **30**, **32** are provided by the pointer pipelines **34***a* and **34***b* respectively. The register file **36** has four ports, two read ports **37** and **36** and two write ports **55** and **56**. The register file of the present invention is

able to provide one operand to each arithmetic pipeline every cycle and is able to write a result from each arithmetic pipeline operation every cycle.

It is appreciated that each of the two arithmetic pipelines operate of the present invention in parallel to perform the above computations simultaneously. It is also appreciated that the pointer values supplied by the pointer pipeline **34***a* and **34***b* are also updated during the same time as the arithmetic pipelines are performing their calculations. The present invention provides a system whereby in the same instruction cycle that the arithmetic pipelines are calculating their respective results, a pointer pipeline associated with each arithmetic pipeline is preparing the pointer values Pta, Ptb for the next computation (instruction cycle) so that there is no processing delay associated with the pointer update function. It is further appreciated that since the two arithmetic pipelines **38**, **40** are identical and also that the two pointer pipelines **34***a* and **34***b* are identical, only one set of arithmetic pipeline **38** (the distance pipeline) and associated pointer pipeline **34***a* will be described in detail herein. It is appreciated that the other set, arithmetic pipeline **40** (the best path pipeline) and pointer pipeline **34***b* is analogous. It is appreciated that the general purpose register file **36** is common between both of the above sets.

C. Instruction Formatting of the Present Invention

The present invention PR engine **525** may utilize a Very Long Instruction Word architecture processing and utilizes a specialized instruction coding scheme that allows the parallel processing capabilities as described above. This encoding scheme uses a Very Long Instruction Word (VLIW) encoding scheme which illustrated in Table I below. That is, in the currently preferred embodiment, many instructions are grouped together into wide instructions and issued in a single instruction cycle. Each part of the wide instruction words controls a different pipeline in the PR engine **525**. In the present invention, the ability to achieve this type of parallelism using wide instructions is due, in part, to the nature of the recognition algorithms utilized by PR engine **525**, which perform computations independent of branching routines and loop structures (i.e., the control flow) embedded within the pattern recognition program.

In the currently preferred embodiment, the width of the wide instruction word is 80 bits. Instructions are kept in a program memory **415** which is loaded before the program begins from the off-chip memory **615** or from the disk **516** or from the main memory **512** of the computer system **500**. The present invention also uses a shorter 40-bit format for instructions. The most significant bit of the instruction defines its format. In the currently preferred embodiment, if the most significant bit is 0, the instruction is a short 40-bit fore, at. However, if the most significant bit is a 1, the instruction is a long 80-bit format.

Specifically, according the table long format instructions comprise six separate fields. The first field identifies whether or not the instruction format is long or short. Table I illustrates a long format. The second field is a 15 bit field that contains control instruction information and contains a long control instruction. The third field contains information for the operation of the distance arithmetic pipeline **38** and the fifth field contains information for the operation of the best path arithmetic pipeline **40**. The fourth and sixth fields contain information that is sent to the two pointer pipelines **34***a* and **34***b*, respectively, for pointer update. It is appreciated that the two arithmetic pipelines as well as the two pointer pipelines operate in parallel according to the fields of the Very Long Instruction Word format.

TABLE I

| 1bit | 15 bits | 27 bits | 5 bits | 27 bits | 5 bits |
|---|---|---|---|---|---|
| 1 | Long Cntl | ALU1 | Pt1 | ALU 2 | Pt 2 |

According to Table I, the fourth field corresponds to the instruction field for pointer pipeline **34***a*. This five bit field controls the pointer pipeline used by the distance arithmetic pipeline **38** of the present invention and contains a pointer instruction or operation. The sixth and last field corresponds to the instruction field for pointer pipeline **34***b*. This five bit field controls the pointer pipeline used by the best path arithmetic pipeline **40** of the present invention and contains a pointer instruction or operation. It is appreciated that a pointer instruction may utilize pointer information stored within an arithmetic instruction field.

The short instruction format (40 bit format) of the present invention resembles the above Table I however contains only four fields. In the currently preferred embodiment, the first field comprises 1 bit, the second field comprises 7 bits of control information, the third field comprises 27 bits and the fourth field comprises 5 bits. In the present invention, the first field indicates whether the instruction is a long or short instruction. The following seven bits (i.e., the second field) represent a short control instruction. The twenty-seven bits (i.e., the third field) following the seven bits of the short instruction represent an arithmetic pipeline instruction. The last five (i.e., the fourth field) bits represent a pointer instruction.

Short control instructions are used by the present invention to initiate loops, to set up the control registers (CRs) and the condition bits in the control pipeline. Short instructions also allow the control of simple loops, like initialization loops for example. Long control instructions are used in the inner loops, to control the program flow and perform the branching and comparison operations of the control pipeline. In the currently preferred embodiment, all but two short control instructions are a subset of the long control instructions. The control instructions utilize control registers, which hold loop counters and branch addresses and displacements, flags and condition bits in the control pipeline for their execution.

In the currently preferred embodiment of the short and long control instruction format, the three bits following the first bit represent the opcode of the instruction, while the remaining bits specify the control registers, flags or condition bits required for execution. The currently preferred embodiments of both the short and control instructions and their associated operations are included in the Appendix C.

Table II illustrates in detail the fields available for each 27 bit arithmetic pipeline instruction field. As shown them are four different instruction formats available for the arithmetic pipeline of the present invention. For the sake of discussion, it is assumed that Table II illustrates the breakdown of the fields associated the distance arithmetic pipeline **38** and pointer pipeline **34***a*. However, the discussion equally applies to the best path arithmetic pipeline **40** except that each pipeline utilizes a different and associated pointer pipeline. As Table II illustrates the arithmetic pipeline instructions are 4 address instructions. An arithmetic pipeline instruction specifies addresses of two pointer registers and addresses of two general purpose registers. Which registers are used as sources or source addresses and which registers are used as destination or destination addresses is specified in a 5 bit field called the type, or, more specifically, source type and destination type. The operation performed

between the sources is called the opcode. The accumulator may also be a source and it is appreciated that the accumulator always holds the result of the previous arithmetic pipeline instruction.

TABLE II

| 6 bits Opcode | 1 bit Destination type | 4 bits Source Type | 4 bits Ptb | 4 bits Pta | 4 bits Regf | 4 bits Regd |
|---|---|---|---|---|---|---|
| Opcode | 1 (*Ptb) | Ox11 *Pta op Imm | Ptb | Pta | 8 bit immediate | |
| Opcode | 0 (Regd) | 1111 Regf op Imm | 8 bit immediate | | Regf | Regd |
| nop or 1dimm | 0 (Regd) | 16-bit immediate | | | | Regd |

The above Table II illustrates that the arithmetic pipeline of the present invention may adopt one of four different formats. The first format will be discussed in detail herein. According to the first format, the first six bits of the instruction represent the opcode or operation for the particular instruction cycle. A listing of the available operations that may be performed by each arithmetic pipeline the present invention is presented herein at the Appendix A. The arithmetic pipeline opcode is typically a arithmetic operation to be performed by the arithmetic pipeline. The next bit indicates where the destination will be for the result of the operation. This destination may be the designated register, Regd, of the general purpose register file **36** or may be an address within the data memory **30** as pointed to by the designated pointer, Ptb. The next four bits indicate the source type of the present instruction which indicates from where the sources of the opcode will be taken. This will be described in detail to follow. The next four bits (the fourth field) indicate which pointer of the 16 pointers of the pointer file associated with arithmetic pipeline **38** will be designated as pointer Ptb. The next four bits (the fifth field) indicate which pointer of the 16 pointers of the pointer file associated with arithmetic pipeline **38** will be designated as pointer Pta. The following four bits indicate which register of the 16 registers of the general purpose register file **36** will be designated as Regf. The following four bits indicate which register of the 16 registers of the general purpose register file **36** will be designated as Regd.

It is appreciated that this first format of the arithmetic pipeline instruction contains four addresses of four different sources. Depending on the status of the source type field, these four addresses may be utilized in order to gather the operands for the designated opcode or to route the result of the opcode to a proper destination. It is appreciated that since pointer pipeline **34***a* operates in parallel with arithmetic pipeline **38** and may designate pointers for a pointer instruction, up to four separate addresses may be utilized and updated within a single instruction. This format allows a large degree of flexibility for the instructions of the arithmetic pipelines of the present invention. According to the second fore, at illustrated in Table II, an 8 bit immediate value can be placed into the last 8 bits of the arithmetic pipeline instruction format. In this format, the destination address must be designated as *Ptb which is the address within the memory **30** pointed to by Ptb. In the third format, the 8 bit immediate value is placed in the 8 bits that are usually reserved for the pointer indicators. In this format, the result is predetermined for the register, Regd. Lastly, the forth format allows for a 16 bit immediate value to be introduced into the arithmetic pipeline. It is appreciated that the type field indicates the addressing mode for the operands and results of the operation specified within the opcode field. Therefore, four addressing modes are provided for the operands: 1) immediate operand mode; 2) register operand mode; 3) pointer indirect mode; and 4) pointer indirect with register offset mode. Register mode and pointer indirect mode are the two only possible addressing modes for results of arithmetic pipeline instructions.

Table HI illustrates how the selection of destination and sources of the arithmetic pipeline are selected depending on the destination and source type fields.

TABLE III

| Destination Type (1 bit) | Source 1 Type (2 bits) | Source 2 Type (2 bits) |
|---|---|---|
| 0 Read | 00 *Pta (byte) | 00 *Ptb (byte) |
| 1 *Ptb | 01 *Pta (word) | 01 *Ptb (word) |
| | 10 *(Pta + Regf) | 10 Accumulator |
| | 11 Regf | 11 Immediate |

According to Table III, when the destination field of the arithmetic pipeline instruction format is 0, the result of the arithmetic pipeline will be loaded from the accumulator into the register indicated as Regd. Otherwise, the result will be loaded into the memory **30** at a location indicated by pointer, Ptb. The first two bits of the source type refer to the first source location for the arithmetic pipeline **38**. If the first two bits of the source type are 00 then the first source will be indirectly addressed from pointer, Pta, from the memory **30** in a 8 bit format. If the first two bits of the source type are 01 then the first source will be indirectly addressed from pointer, Pta, from the memory **30** in a 16 bit word format. If the first two bits of the source type are 10 then the first source will be indirectly addressed from pointer, Pta, and offset by the value of Regf from the memory **30** in a 16 bit word format. If the first two bits of the source type are 11 then the first source will be taken as the value within Regf, a direct access, in a 16 bit word format.

Referring still to Table III, the second two bits of the source field indicate the location of the second source of the arithmetic pipeline **38**. If the second two bits are 00 then the second source will be obtained via indirect addressing according to the value of pointer, Ptb, and the memory **30** will deliver a byte format. If the second two bits are 01 then the second source will be obtained via indirect addressing according to the value of pointer, Ptb, and the memory **30** will deliver a word format. If the second two bits of the source type field are 10 then the second source will come from the accumulator of the arithmetic pipeline **38**. If the second two bits of the source type are 11 then the second source of the arithmetic pipeline will come from the immediate value found in the arithmetic pipeline instruction format of Table II. Table III illustrates that the present invention arithmetic pipeline offers a rich addressing scheme of four possible operand addresses for each arithmetic pipeline instruction opcode.

D. Distance Arithmetic Pipeline **38** of the Present Invention

Given the addressing schemes of the present invention as described above and the instruction formats, a discussion of the hardware components that realize elements of an arithmetic pipeline of PR engine **525** of the present invention will now be discussed. With reference now to FIG. **8**, there is illustrated a more detailed diagram of the distance arithmetic pipeline **38** (dashed lines) that performs the distance calculations of the HMM and DTW procedures. The best path arithmetic pipeline **40** is identical to this pipeline. FIG. **8** also illustrates the general purpose register file **36** and the associated data memory **30** in more detail that are used with

the arithmetic pipeline **36**. It is appreciated that with reference to the arithmetic pipeline **40**, it will exchange information with memory **32** which is addressed by pointer pipeline **34***a* but will address the general purpose register file which is common to both arithmetic pipelines.

Data memory **30** is shown in FIG. **8**. The write data port **30***b* of memory **30** is coupled to a register (latch) **91** which receives data input from a multiplexer **93** over three sources. It receives input from the system bus **100**, from a memory to memory transfer block **416** input **115** or from the output of the arithmetic pipeline **38**. The single write address port **30***a* of memory **30** receives an input from register (latch) **83** which receives an input from multiplexer **80**. Addresses from the memory to memory transfer block **416** over line **115** or from the designated pointer, Ptb, can be multiplexed into the latch **83**. The pointer, Ptb, originates from the pointer pipeline **34***a*. The first read address port **30***c* of the memory **30** is coupled to a register (latch) **84** which receives its input from multiplexer **82**. Multiplexer **82** receives address inputs from designated pointer, Ptb, and from the memory to memory transfer block **416** over line **115**. The second read address port **30***d* receives input from logic unit block **85** which receives two inputs. One input is the designated pointer, Pta, and the other input is the designated register, Regf. The first read address port is associated with the first read data output port **35** and the second read address port is associated with the second read data output port **44** of the memory **30**. It is noted that an output from channel **44** is also fed to the memory to memory transfer block **416**.

The two read data output channels **35** and **44** supply two operands to the arithmetic pipeline **38**. The read data output channel **35** of the present invention is a sixteen bit line and is fed into a eight bit multiplexer (not shown here) and then fed into a sign extension block **61** of the arithmetic pipeline **38**. Similarly, the read data output channel **44** is a sixteen bit line and is fed into a eight bit multiplexer (not shown here) and fed into a sign extension block **62** of the arithmetic pipeline **38**. The sign extension logic blocks **61** and **62** are coupled to an input line of each multiplexer **64** and **66** respectively. Each sixteen bit data channel **35** and **44** is also directly coupled to the inputs of multiplexers **64** and **66** respectively. Also coupled to an input of multiplexer **64** and **66** is the accumulator **74**. The output of the register file **36** is also fed into an input of multiplexer **64** via line **37** and a bypass circuit; this carries the designated Regf value. Coupled to the input of multiplexer **66** is line **86** which carries an immediate value. Multiplexer **64** is selected via the first two bits of the source type field and multiplexer **66** is selected via the last two bits of the source type field associated with arithmetic pipeline **38**. Multiplexer **64** therefore selects the location for the first source which is loaded into register (latch) **68** while multiplexer **66** selects the location for the second source which is loaded into register (latch) **69**. The reason the accumulator is fed into the first source, even though no accumulator location is allowed according to Table III, is because when a designated Regf is a register that was previously the value of the accumulator in the just previous instruction, the present invention will input the accumulator value as Regf instead of accessing the register file **36**. This is an implementation choice selected by the present invention for efficiency and is transparent to a programmer of the ,arithmetic pipeline **38**.

The arithmetic pipeline **38** of FIG. **8** of the present invention for the direction arithmetic pipeline contains four operators within an operator unit **70**. These operators are a barrel shifter **70***a*, and adder and subtractor **70***b*, an ALU unit **70***c* which may also perform subtraction operations, and a pass operator **70***d* which is a multiplexing element between the first and second sources. It is appreciated that the present invention may operate utilizing a variety of operators and that the above are illustrated as just one operator configuration of the present invention. Each of the above four operators are coupled to both sources **68** and **69** to receive the two operands. Each of the operators are also coupled to a multiplexer **72** which channels the results to an accumulator. Depending on the operation selected, the multiplexer **72** channels the proper result to the accumulator latch **74**. All of the arithmetic operations are done with 16 bit operands and results. It is appreciated that there are two operators that may perform subtraction functions, the ALU **70***c* operator and the subtractor **70***b* operator. The accumulator is also fed via line **55** to a bypass circuit into multiplexer **66** and to a bypass circuit that may substitute for Regf. Further, the accumulator output is fed into one input of multiplexer **76** along with the memory bus **110**, the system bus **100** and an input from a memory to memory transfer block **416** over line **115**. The output of the multiplexer **76** is then fed via line **90** to the 16 bit general register file **36** into the register designated as Regd by the arithmetic pipeline instruction format shown in Table II.

According to the diagram of FIG. **8**, the present invention arithmetic pipeline **38** may have two possible source locations; one operand may come from the general purpose register file and an operand may come from the data memory **30** accessed by a pointer from the pointer pipeline **34***a*. Also, there are two possible destinations for a particular arithmetic pipeline instruction format; one possible destination may be to store the result into the register file **36** or to store the result into the data memory **30**. Multiplexers **64**, **66**, **72**, **76** and **93** are used to perform the specific routing to realize the source and destination types indicated by the instruction formats of Table II of the present invention.

Referring now to FIG. **9**, the present invention arithmetic pipeline is disclosed in more detail. The memory unit **30** of the present invention is divided into 256 entries of 16 bits each entry and each entry is also divided into two bytes. Therefore, there are 512 byte entries within the memory **30**, the same is true for memory **32**. Table III allows both byte and word accesses from the memory **30** via the pointers *Pta and *Ptb (indirect accessing used here). Depending on the source type, the arithmetic pipeline will process the output of the memory **30** as word data or as byte data. It is appreciated that each of the read address ports **30***d* and **30***c* of the memory **30** input an eight bit address value in order to access the memory. This is the case because the output channels **34** and **44** are sixteen bits long and there are 256 entries. However, for byte accessing there must be another bit added so that an individual byte within an accessed word can be selected. This ninth bit is the least significant bit of the address value is supplied by the pointer values, Pta and Ptb, and is separated from the address that enters port **30***d* and port **30***c*. The LSB bit from pointer, Pta, is carried via line **165** to a high/low selector input of multiplexer **101**. The LSB bit from pointer, Ptb, is carried via line **166** to a high/low selector input of multiplexer **102**. The manner in which the present invention utilizes these bits will be developed in discussions to follow further below. It is appreciated that all reference to pointers Pta and Ptb refer to the pointer that originate from the pointer pipeline **34***a*.

Since Table III only allows pointer Ptb or Regd to be a destination address, the write address into port **30***a* of memory **30** is Ptb from the pointer pipeline **34***a*. Data for the write channel **30***b*, as discussed before, may originate from the accumulator via line **55** or may come from another

system component over the system bus **100** or memory to memory transfer block **416** over line **115**. The first read address channel **30***d* originates from multiplexer **124** which is controlled by select line **150**. Select line **150** carries the first two bits of the source type of the arithmetic pipeline **38** instruction format of Table III. If line **150** selects '00' or '01' then the multiplexer allows the pointer data of Pta to pass to port **30***d*. If the select line **150** selects '10' then the multiplexer **124** will couple the line **120** to channel **30***d*. Line **120** is output from a logical adder **122** that adds the values of the designated Regf to the value of the pointer, Pta and outputs the result over line **120**. In all cases the pointer value, Ptb, is fed to the input of read address channel **30***c* during HMM or DTW processing of the present invention.

The data read output channel **35** is 16 bits wide and will carry the high and low bytes of the word address by the signal at line **30***d*. This line **35** is separated into a high byte line having 8 bits and a low byte line having 8 bits and each of these are fed into a multiplexer **101**. Multiplexer **101** will select either the high byte line or the low byte line of the addressed word depending on the value of line **165** which is the ninth and least significant bit of the designated pointer, Pta, or the summation of Pta and Regf. If line **165** is low, the low byte is selected and if line **165** is high then the high byte is selected and routed to the sign or zero extension block **61**. Line **155** originates from the instruction opcode field of Table II. This field will indicate if sign extension is required by the nature of the opcode. If sign extension is required then the selected byte from line **35** and the multiplexer **101** will be placed into a 16 bit register in the least significant byte position and the most significant byte of the 16 bit register will be all set to "1" by block **61** of the present invention if the sign bit of the selected byte is a "1." However, the most significant byte of the 16 bit register will be all set to "0" by block **61** if the sign bit of the selected byte is a "0." This block **61** can transform a signed byte (8-bits) into a signed word (16-bits) if the opcode of the current arithmetic pipeline instruction indicates that a sign operation is required.

The 16 bit register result of the sign/zero extension block **61** is fed into one input of a multiplexer **64**. The 16 bit data read channel **35** is also fed into an input of multiplexer **64**. Lastly, the value of the designated register, Regf, is fed into an input of multiplexer **64**. Multiplexer **64** is selected according to line **150**. If line **150** selects '00' then the output of block **61** is channeled into the first source register **68**. If line **150** selects '01' or '10' the multiplexer **64** selects the read data channel **35** to be coupled to the first source register **68**. Lastly, if line **150** selects '11' then line **37** is coupled to the first source register **68**.

Referring still to FIG. **9**, the second read data channel **44** outputs a 16 bit value which is separated into two 8 bit lines, a high byte and a low byte and each of these are fed into a multiplexer **102**. Multiplexer **102** will select either the high byte or the low byte of the addressed word depending on the value of line **166** which is the ninth and least significant bit of the designated pointer, Ptb. If line **166** is low, the low byte is selected and if line **166** is high then the high byte is selected and routed to the second sign or zero extension block **62**. The multiplexer is selected by line **155**. Line **155** originates from the instruction opcode field of Table II. This field will indicate if sign extension is required by the nature of the opcode. If sign extension is required, then the selected byte from line **44** and the multiplexer **102** will be placed into a 16 bit register within block **62** in the least significant byte position and the most significant byte of the 16 bit register will be all set to "1" by block **62** of the present invention if the sign bit of the selected byte is a "1." However, the most significant byte of the 16 bit register will be all set to "0" by block **62** if the sign bit of the selected byte is a "0." This block **62** can transform a signed byte (8-bits) into a signed word (16-bits) if the opcode of the current arithmetic pipeline instruction indicates that a sign operation is in order. The 16 bit register of block **62** is then output to an input of multiplexer **66**.

Referring to FIG. **9**, multiplexer **66** receives an input from block **62**. It also receives an input directly from channel line **44**. It receives an input from the accumulator of arithmetic pipeline **38** over line **55**. Lastly, multiplexer **66** receives an input from line **86** which is the immediate data value of the arithmetic pipeline instruction format. All of the inputs to multiplexer **66** are 16 bit in length. Line **152** is fed as the select line for multiplexer **66** and represents the last two bits of the select type of Table III. If line **152** selects '00' then the input from the block **62** coupled to the second source register **69**. If line **152** selects '01' then line **44** is coupled to register **69**. If line **152** selects '10' then line **55** is coupled to the register **69** to bring the accumulator value to the second source and if line **152** selects '11' then line **86** is coupled to place the immediate value into register **69**. The output of the first source register **68** and the second source register are fed to the operator unit **70** which contains the barrel shifter operator, the adder/subtractor operator, the arithmetic pipeline operator, and the pass operator. The multiplexed result of the operator unit **70** is then routed into an accumulator register **74** which is coupled to line **55** and also fed into a multiplexer **76** which supplies the result to the register file **36** as designated register, Regd. The system bus is also coupled to the multiplexer **76**.

The destination type bit of the arithmetic pipeline instruction format of Table III effects the placement of the result of the arithmetic pipeline **38**. When the destination is selected as the designated register Regd (i.e., the bit is 0) then the write enable **173** of the general purpose register file **36** allows the arithmetic pipeline result to be stored into the addressed Regd. When the destination type is selected for the indirect addressing pointer, *Ptb, (i.e., bit is 1) then the write enable is asserted onto memory **30** which is addressed by pointer Ptb via port **30***a* and the result is supplied via line **55** and the multiplexer **93**. It is noted that multiplexer **93** selects line **55**, or line **100**, as an input during HMM and DTW point processing.

Therefore, according to the above discussions the present invention arithmetic pipeline realizes in circuitry the addressing modes illustrated in Table I, Table II, and Table III. It is appreciated that all of the discussions with regard to FIG. **8** and FIG. **9** apply analogously to identical arithmetic pipeline **40**. However, pointers Pta and Ptb originate from pointer pipeline **34***b* for the arithmetic pipeline **40** and the memory unit associated with arithmetic pipeline **40** is memory **32**. Further, while the distance arithmetic pipeline **38** utilizes the first arithmetic pipeline instruction field (27 bits) of Table I, the best path arithmetic pipeline **40** utilizes the second arithmetic pipeline instruction field (27 bits) of Table I.

E. Pointer Pipeline **35***a* of the Present Invention

FIG. **10** is a logical block diagram and illustrates the elements of pointer pipeline of PR engine **525** of the one embodiment of the present invention in more detail concerning the interface of the arithmetic pipelines and the pointer pipelines. The two arithmetic pipelines **38** and **40** are illustrated coupled to memory units **30** and **32** respectively and also coupled to the general purpose register file **36**. Pointer pipeline **34***b* is illustrated coupled to memory unit **32**. The distance pointer pipeline **34***a* is illustrated in more

detail. Within the pipeline architecture **38** is located a pointer register file **200** that contains 8 registers that are 16 bits wide each. This register file is coupled to a pointer operator **205** which is a logical unit that can perform operations on the pointers, Pta and Ptb. The designated pointers, Pta and Ptb are output over lines **220** and **225**, respectively, which are coupled to memory **30** and also coupled to the pointer operator **205**. The result of the pointer operator is fed back into the pointer register **200**. Also, Regf is supplied to the pointer register file **200** via line **37** from the register file **36**.

Given this overall system diagram, it is appreciated that the architecture and instruction coding for pointer pipeline **34***b* is identical to the pointer pipeline **34***a* (except pipeline **34***a* addresses memory **30** while pipeline **34***b* addresses memory **32**) and therefore is not described in detail as to not unnecessarily obscure the present invention. It is appreciated that the pointer pipeline **34***b* contains its own pointer register file and does not utilize the register file **200** of pointer pipeline **34***a*. Since each arithmetic pipeline has a corresponding pointer pipeline counterpart, during the processing cycle wherein an arithmetic pipeline is performing a point computation, the associated pointer pipeline will be updating the pointer information so that upon the immediate next processing cycle the arithmetic pipeline may process the next valid point of the lattice without a pointer update delay.

In so doing the processing required to update the pointers takes no additional processing tinge. The present invention therefore offers an extremely efficient and rapid processing scheme that may be especially useful in pattern recognition procedures. It is appreciated that the arithmetic pipeline **38** may operate utilizing one or two addresses as a source for source**1**, one address as a source for source**2**, one address as a destination while the pointer pipeline **34***a* may simultaneously operate on another, fourth address which may be an additional pointer address. Therefore, within one instruction the present invention allows processing four addresses and a pointer address update function. Therefore, within one instruction the present invention allows simultaneous processing four addresses and two arithmetic functions, one function being computed by the arithmetic pipeline and the other being computed by the pointer pipeline.

Refer now to FIG. **11** which illustrates in more detail a pointer pipeline (**34***a* or **34***b*) of the PR engine **525** of the present invention. Each pointer pipeline has two adders to compute (pointer+some increment) and (pointer+Register Regf). All pointer operations are 16 bit operations. Write data enters pointer register file **200** via write data port **261**. This data is loaded into register **246** via a number of sources. Pointer data may originate from the system bus **100**, or from the memory to memory transfer bus **110**. Pointer data may arrive from the designated register, Regf via line **37**. Data also may enter the write port **261** via the output of adder **250** or from the output of adder **255**. Depending on the particular pointer instruction opcode designated in the pointer field (field **4** or field **6**) of Table I, a particular source of the above will be multiplexed (via a first pointer multiplexer) into register **246** and input to the write port **261** of the present invention. The write address port **262** of the pointer file receives the pointer address via register **240** which multiplexes inputs from the memory to memory transfer block and from the currently designated pointers, Pta and Ptb. The value input to port **262** will be the address of the designated pointer within the pointer file **200**. There are 8 pointers within each pointer file of the present invention, therefore, there are 16 unique pointer addresses for Pta or Ptb. It is appreciated that the output of operator **255** may also be carried over line **220** to the associated arithmetic pipeline.

According to the present invention, the pointer file **200** of the present invention contains two read address ports **263** and **264** and two mad data output ports **265** and **266** respectively. The read address port **263** inputs the address of designated pointer Ptb via register **242**. Pointer address for Ptb is supplied via the arithmetic pipeline instruction field of Table II. The pointer value for pointer Ptb is then output over read output data port **265**. The read address port **264** inputs the address of designated pointer Pta via register **244**. The memory to memory transfer block may also access port **264** via register **244** for initialization and setup purposes. Pointer address for Pta is supplied via the arithmetic pipeline instruction field of Table II. The pointer value for pointer Pta is then output over read output data port **266**. It is appreciated that both pointers, Pta and Ptb, may be accessed via the pointer register file **200** simultaneously.

Refer to FIG. **11**. Both output ports **266** and **265** are routed to the data input port **261** for pointer swap capabilities. The outputs of port **266** and port **265** are multiplexed into a first input of adder **250**. The other, second, input of adder **250** receives data from register **248**. Register **248** receives data from the increment field of the pointer instruction (which will be described below in Table IV) and this value is zero extended. Depending on the status of the pointer instruction, a different data channel **266** or **265** will be coupled to adder **250** via the first input. Adder **250** outputs a result which is multiplexed with an 8 bit immediate value from the arithmetic pipeline instruction. This multiplexed result is then fed to an input port of the first pointer multiplexer which supplies data to the register **246**. Using the adder **250** and the multiplexed values from the arithmetic pipeline immediate field, the present invention allows the pointer pipeline to perform the operations of incrementing a pointer value or assigning a pointer value with an immediate value from the arithmetic pipeline instruction field (Table II).

The output of port **266** is fed into the first input of adder **255** and then is output via line **220** as the current value of designated pointer, Pta, which is used to address memory **30** for the distance arithmetic pipeline **38**. The output port **265** is output via line **225** as the current value of the designated pointer, Ptb, which is used to address memory **30** of the distance arithmetic pipeline. Line **37** carries the value of the designated register, Regf, into the second input of adder **255**. The result of adder **255** is then routed to the first pointer multiplexer and to register **246**. Adder **225** allows the pointer pipeline of the present invention to realize the pointer, Pta, plus register, Regf, operation which may be fed back into register **246** depending on the status of the current pointer instruction.

Table IV below illustrates the detailed decoding scheme of each of the 5 bit pointer instruction field of Table I. As noted, there are two pointer instructions in Table I, one for each of the two pointer pipelines. The first field of Table IV is a one bit field that indicates which designated pointer, Pta or Ptb, is involved in the pipeline operation. This will determine which of the pointer values, Pta or Ptb, are fed to the adder **250** or routed to register **240** for write addressing. The second field, the 2 bit opcode field, indicates the type of instruction to be executed by the pointer pipelines. The last field, the 2 bit increment field, indicates the increment type designated in the opcode field. If the opcode field is '00' and the increment field is a '00' then no operation takes place and the values of the pointers within the register file **200** remain constant during the instruction cycle. If the opcode field is '00' and the increment field is '01' or '10' then either designated pointer Pta or Ptb (depending on the status of the first field) will be incremented by 1 or 2 respectively and

stored back into the pointer register file. This realizes the instruction Pta=Pta+1 or +2 and Ptb=Ptb+1 or +2. In this case the output of adder **250** is channeled into register **246**. If the increment field is '11' and the opcode field is '00' then the immediate value indicated by the arithmetic pipeline instruction (Table II) is placed into the pointer register indicated by the first field (i.e., either Pta or Ptb). This realizes the instruction Pta or Ptb= immediate. In this case the output of adder **250** is channeled to register **246**.

According to Table IV, if the opcode field indicates '01' then either Pta or Ptb is assigned the value associated with the register, Regf. In this case line **37** is channeled to register **246**. If the opcode field is '10' then the pointer Pta is added to value contained within register Regf. This realizes the operation Pm=Pta+Regf. In this case the output of adder **255** is channeled into register **246**. According to the last two cases, when the opcode field is '11' and the first field indicates 0 then Pta=Ptb and Pta is the source write address while the Ptb value is channeled to port **261**. When the opcode field is '11' and the first field indicates 1 then Ptb=Pta and Ptb is the source write address while the Pta value is channeled to port **261** to perform the swap operation. According to the above discussion, the pointer pipeline has the capability to perform several basic operations on the pointer values concurrently with the arithmetic pipeline processing. It is appreciated that the pointer register file **200** contains 8 registers of 16 bit width. The arithmetic pipeline instruction format of Table II indicates which of these 8 registers will be Pta and Ptb associated with the pipeline **34***a*. Once these are defined, the associated pipeline instruction format of Table IV determines the operations performed on these registers.

TABLE IV

| Which 1 bit | Opcode 2 bits | Inc 2 bits | Flags |
|---|---|---|---|
| 0 | 00 Nop | 00 | |
| 1 Pta | 00 Pt + Inc | 01 Inc = 1 | ZP, CP |
| 0 Ptb | 00 pt + Inc | 10 Inc = 2 | ZP, CP |
| | 00 Imm | 11 | |
| | 01 Regf | 00 | ZP, CP = O |
| | 10 Pta + Regf | 00 | ZP, CP |
| 0 | 11 Ptb | 00 | |
| 1 | 11 Pta | 00 | |

It is appreciated that one pointer instruction is attached to each arithmetic pipeline instruction. It operates on one of the pointer registers specified in the corresponding arithmetic pipeline instruction: Pta, or Ptb, as defined by the first field pointer bit. Pointers can be incremented (used when accessing successive data in an array of memory **30**), loaded with the contents of a general purpose register, loaded with an immediate value, or added to the contents of a general purpose register. Pta can be loaded with the contents of Pta and Ptb can be loaded with the contents of Pta. As can be seen, the pointer pipelines **34***a* and **34***b* provide the addresses of operands and results of the data memories **30** and **32**. There are two pointer pipelines, one for each data memory. The pointer pipelines execute arithmetic instructions on the pointers, Pta and Ptb. Each pointer pipeline is capable of delivering two pointers (Pro and Ptb) to an associated data memory every instruction cycle, and also capable of executing one operation on one pointer every instruction cycle. The register file **200** of the pointer pipeline **34***a* associated with the memory **30** holds pointers **0** to **7** while the register file associated with the pointer pipeline **34***b* for data memory **32** holds pointers **8** to **15**. Pointers **0** to **7** cannot be used to address the memory **32** while pointers **8** to **15** are not used to address memory **30**.

It is appreciated that in view of the addressing available for the arithmetic pipeline and that the pointer pipeline allows operations on a selected pointer that may also include a register offset, the present invention provides an instruction capable of four addresses. The above is allowed per instruction cycle. It is further appreciated that in view of the addressing available for the arithmetic pipeline and that the pointer pipeline allows operations on a selected pointer that may also include a register offset, the present invention provides a PR engine **525** an instruction capable of executing an instruction having four addresses. The above is allowed per instruction cycle. A possible use of the above system would be to perform an operation on a first source from *(Pta+Regf) and a second source from *Ptb, then place the result into Regd and at the same time increment pointer Pta. The above can be accomplished within one instruction cycle in a single instruction format using an arithmetic pipeline and a pointer pipeline. It is clear that four addresses were simultaneously utilized, two registers and two pointers. Since the present invention offers two pairs of arithmetic and pointer pipelines, the above function can in reality be accomplished twice, once by each pipeline pair.

Asymmetric Source Type Fore, at of the Present Invention

Referring to Table III, the four possible sources or set of addresses for the source**1** operand are not symmetric to the four possible sources or address set for the source**2** operand. That is, the accumulator and the immediate data are available only to the source**2** operand and not to the source**1** operand, therefore the sets of sources available for source**1** is not equal to the set of sources available to source**2**. Further, the register Regf source is not available to the source**2** but is available to source**1**. Also, source indexing mode (via Regf) is not available for source**2** but is available for source**1**. This is referred to as source asymmetry within the operands of the arithmetic pipelines. This asymmetry was designed into the present invention to allow greater source addressing flexibility and combinations while also tailoring the addressing combinations of the arithmetic instructions to the DTW and HMM pattern recognition procedures as well possible future evolution's of these recognition procedures.

In order that such asymmetric addressing capability not pose a limitation to the present invention, the present invention has provided several special complementary instruction pain for noncommutative operations that allow any of the instruction operands of such operations to come from either source**1** or source**2** to eliminate the problem posed by address set asymmetry. For example, refer to the Appendix A which illustrates a listing of the arithmetic pipeline operations that the present invention PR engine **525** currently supports. Since subtraction is a noncommutative operation there are two instruction to perform subtraction. Once instruction, opcode=AH, specifies the subtraction of source**1**–source**2**. Another complementary instruction, opcode=CH, specifies the subtraction of source**2** - source**1**. Therefore, the accumulator, which is available only to the source**2** register, may be subtracted from a value (source**1** - accumulator) or may have a value subtracted from it (accumulator - source**1**) depending on the instruction selected of the complementary instruction pair. In this way the present invention offers flexibility for the use of the immediate value and accumulator value in spite of the fact that the source addressing is not completely symmetric with respect to the accumulator and immediate value.

Byte or Word Accessing in Memory Without Processing Penalty

The arithmetic pipeline, may address either a byte data or a word data item within the same instruction cycle. That is,

with reference to FIG. **9**, multiplexer **64** and multiplexer **66** may select either the word output from memory **30** or the selected byte output from memory **30** within the same instruction cycle. Each multiplexer is independent and may take a word or a byte input. Also, operations may utilize operands that mix byte and word data within the same instruction clock cycle. For instance source1 may come from *Pta(byte) which is a byte format while source2 may come from the accumulator or from *Ptb(word) and either are word formats. It is appreciated that is advantageous to be able to mix byte and word formats within the same instruction while having the ability to execute that instruction within one clock cycle. The present invention offers the ability to perform an operation involving two byte operands or a byte operand and a word operand or two word operands without any performance degradation between the above types.

F. Control Pipeline **454** of the Execution Unit **430**

In the preferred embodiment of the present invention, the control registers (CRs) are typically used as loop counters. Arithmetic operations are executed on the control registers. The values in the control registers are updated each time a loop is executed. The values in the control registers can be compared between themselves or to some other value to determine conditions upon which branch operations may be taken.

The control flow pipeline **454** of the PR engine **525** is also responsible for generating flags and condition bits which are used with branch instructions. The flags are set as a result of the operations performed by all of the pipelines. The condition bits are set as a result of the operations performed by the arithmetic operator of the control flow pipeline. The flags are used by conditional branch instructions to determine whether or not to branch. In the present invention, control unit **454** is capable of generating its own condition bits, which do not depend on any other units (i.e., the arithmetic pipelines; the pointer pipelines) for the generation. The control flow pipeline **454** is also capable of using flags produced by all of the different pipelines in the execution unit. In the currently preferred embodiment, all of the flags are stored in a flag register. It is appreciated that long and short control instruction formats and related information is presented in Appendix C.

A block diagram of the control flow pipeline **454** and the data flow in the control unit are shown in FIG. **12**. Referring to FIG. **12**, control flow pipeline comprises multiplexers (MUX) **701**,**706**, and **709**, clocked registers **702**, **703**A and **703**B, control register file **707**, arithmetic operator **704**, AND logic gate **705**, flag register **708**, and program counter (PC) logic **710**. MUX **701** is coupled to receive the data output of arithmetic operator **704**, an input from the main memory of the computer system **500**, an input from the system bus, and an input from the general purpose registers used by the arithmetic pipelines. The output of MUX **701** is coupled to and clocked into register **702**. Register **702** is also coupled to an input of control register file **707**. Control register file **707** has three address ports: two read ports and one write port. Control register file **707** is coupled to receive an address from the main memory, via memory control (MC) **419**, or the system bus interface **418** on its write address (WA) port. Control register file **707** is also coupled to receive two read address inputs from the output of MUX **706** and the instruction decoder on its two read ports RA1 and RA2 respectively. MUX **706** is coupled to receive an address from the main memory or the system bus interface **418** and the output of the AND gate logic **705**.

Control register file **707** is also coupled to registers **703**A and **703**B. Register **703**B is also coupled to receive an output from register **702**, an output from PC logic **710**, an output arithmetic operator **704** and the immediate sign extended. The immediate sign extended comprises a constant value which is encoded into an instruction (e.g., the 4 in the instruction $CR_n=CR_n+4$). Register **703**A is also coupled to receive the output of arithmetic operator **704** and an output from register **702**. The data in control register file **707** is also read out by the main memory via memory controller (MC) **419** or devices on the system bus **100** using one of the data ports. The inputs of arithmetic operator **704** are coupled to receive the operands from the registers **703**A and **703**B for execution. An output of arithmetic operator **704** is coupled to PC logic **710**.

Refer still to FIG. **12**. The condition bits are output from arithmetic operator **704** to the condition bit field of flag register **708**. The flags from all the other pipelines are also inputted and stored into the flag register **708**. In the currently preferred embodiment, flag register **708** comprises flags from the memory controller (MC) **419**, the arithmetic pipelines (ALU1, ALU2) **38** and **40**, the pointer pipelines (PT1 and PT2) **34***a* and **34***b* and the condition bits from arithmetic operator **704**. All of the flags from all the pipelines and the condition bits are coupled to be received by MUX **709** which outputs the proper flag for the control flow decision according to the instruction being executed. The condition bits from flag register **708** are also coupled to one of the inputs of AND gate logic **705**. The other input to AND gate logic **705** is coupled to the condition mask bits of the instruction.

The control register file **707** is loaded from MUX **701** via register **702**. In the currently preferred embodiment, control register file **707** comprises sixteen 16-bit registers. Control register file **707** can be loaded from the system bus and communicate with the host CPU main memory **512** through the system bus **100**. Using the system bus inputs, the CPU **510** or other devices are able to write into the control registers. In the currently preferred embodiment, the CPU **510** has control over all internal and external memory of the PR engine **525** and can be utilized to initialize the control flow pipeline. In the present invention, the CPU **510** initializes the control register file **707** with predetermined values at certain times during the operation of the computer system **500**. For instance, when the computer system has been shut down or placed into a suspended state from which the computer system must resume, the CPU **510** initializes the control registers with their last known executable state or predetermined values upon power up.

Control registers **707** can also be loaded from main memory. In the currently preferred embodiment, control registers **707** are loaded from the main memory **512** of the computer system **500** when the PR engine **525** and/or the remainder of the computer system **500** is returning from a suspended state or a powered down state. Control registers **707** can be loaded with the values in the general purpose registers. In this manner, the control pipeline can also operate on data produced by an arithmetic pipeline. In the currently preferred embodiment, the control registers **707** are loaded from the general purpose when a control operation comprises either a loop maintenance or control flow operation which is too sophisticated for the control flow pipeline, such that the arithmetic unit must complete the operation during initialization and the transfer the results to control register file **707** for the control flow pipeline to continue. Control registers **707** can also be loaded from the memory controller **419**.

The control flow pipeline **454** operates on the decoded instruction from the instruction buffer **453** and the instruction decoder **456**. The instruction decoder **456** obtains the

control opcode and indicates what operation is to be performed to arithmetic operator **704**. The results of the decoding also indicate to registers **703**A and **703**B which operands to obtain for arithmetic operator **704**. Registers **703**A and **703**B latch the data from its source. In the currently preferred embodiment, the data can be latched from the control registers in control register file **707**, from register **702**, from the program counter, from the output of arithmetic operator **704** and from the instruction itself as a constant (e.g., from the immediate sign extended). Thus, the decoding of the instruction indicates the location from where the operands of the operation should be read.

Note that for read operations to the control registers in control register file **707**, the data is accessed through addresses presented on read ports RA**1** and RA**2**. In the currently preferred embodiment of the present invention, the read addresses are either encoded in the last three fields of the instruction, is an address generated as a result of the execution of a case instruction, via MUX **706** and AND gate **705** or is from an off-chip source. Addresses encoded into the control instruction to access control registers are received by read port RA**2**. In the currently preferred embodiment, data is read out to the main memory **512** or system bus **100** using an address input at read port RA**1**, via MUX **706**. Likewise, data is written into the control registers using an address on the write address (WA) port of the control register file **707**.

Referring still to FIG. **12**, arithmetic operator **704** performs the adding and subtracting operations dictated by the decoded instruction and writes the results according to the description in the instruction. The results generated by arithmetic operator **704** may be written to PC logic **710**, either of registers **703**A or **703**B, or to a particular control register, via MUX **701** and register **702**, as specified in the instruction. If the resulting data is to be written to a register in control register file **707**, the control register is accessed according to address (n) from the control instruction on the WA port of control register file **707**.

The execution of some operations by arithmetic operator **704** produces condition bits in the present invention. In the currently preferred embodiment, four condition bits are generated. The condition bits are output to flag register **708**, which also receives the other flags from the remainder of the computer system **500**. As the flags and condition bits are utilized in determining whether a branch should be taken, the decoded instruction indicates to MUX **709** which bit or bits from flag register **708** is to be examined. In response, MUX **709** outputs the flag or condition bits designated in the instruction to resolve the control flow decision. The bit value is sent to the program counter, along with any data generated and output from arithmetic operator **704**.

The control unit **454** of the execution unit **430** includes the program counter for the PR engine **525** of the computer system **500** of the present invention. Using the data and any pertinent flag, the control unit is able to keep track of the program counter. In the currently preferred embodiment, the program counter is updated for each clock cycle. Also in the currently preferred embodiment, the control registers in control register file **707** can be used for providing a displacement in the pattern recognition program, wherein the current program counter can be added to a value in a particular control register using arithmetic operator **704** to obtain a new address (i.e., the new location of the program counter). The control registers can also contain an absolute address of where a program is to branch. One example of the use of an absolute address is in the execution of a case instruction where a list of addresses, which are labeled in the control registers, determine the location of the program counter.

In the currently preferred embodiment, the PC logic **710** is shown in more detail in FIG. **13**. Referring to FIG. **13**, MUXs **721** and **723**, PC**0** register **722**, PC**1** register **725**, PC**2** register **726**, instruction fetch (IF) register **728**, instruction decode (ID) register **730**, program memory **415** and decoding stage **729** are shown. MUX **721** is coupled to receive a +8 input address, a +16 input address and the branch address output from MUX **723**. The output of MUX **721** is coupled to PC**0** register **722**. PC**0** register **722** is the program counter and is coupled to program memory **415**, PC**1** register **725**, and can be read by the system bus interface via line **621**. The value of PC**0** register **722** is also fed back and increased by 8 or 16. The newly computed address is then input into MUX **721**. The output of program memory **415** is coupled to IF register **728** and an indication as to whether the instruction fetched was long or short is also looped back, such that MUX **721** can select the proper address for the program counter (which is read into PC**0** register **722**). Note that the instruction in IF register **728** corresponds to the address in PC**1** register **725**.

The IF register **728** is also coupled to decoding stage **729**. The results output from decoding stage **729** is coupled to the ID register **730**. The output of ID register **730** is sent for execution. The PC**1** register **725** is coupled to PC**2** register **726**. Note that the address in PC**2** register **726** corresponds to the instruction in ID registers **730**. The output of PC**2** register **726** is coupled to the arithmetic operator of the control flow pipeline. The arithmetic operator of the control flow pipeline is also coupled to receive an operator from the control registers (CRm). MUX **723** supplies the branch address to MUX **721**. MUX **723** receives both the absolute and relative address outputs from the control flow pipeline and outputs either depending on the instruction. For instance, if a case instruction is being executed, MUX **723** would select the absolute address as the input into MUX **721**.

The PC logic **710** of the PR engine **525** of the present invention shown in FIG. **13** illustrates the relationship between the program counter and the control flow **454** pipeline. The program counter in PC**0** register **722** is used to obtain the new instruction from program memory **415**. In the currently preferred embodiment, the writing of an address into PC**0** register **722** triggers the execution unit of the PR engine **525** to start the execution of the program located at the address written into PC**0** register **722**. While this occurs, the previous instruction as indicated by the address in PC**1** register **725** is in the IF register **728** and awaits decoding. Also when the program counter PC**0** register **722** is loaded, the instruction two stages ahead of the current PC, as indicated by the address in PC**2** register **726**, is in the ID register **730**.

The program counter is loaded according to the previous instruction. If the previous instructions were a branch instruction, then MUX **721** would supply the branch address to PC**0** register **722**. Note that the target of a branch may be the address of a long instruction, the addresses of the first instruction of a pair of short instructions, or the address of a second instruction of a pair of short instructions. Whether the branch address supplied is an absolute address, such as one generated as a result of the execution of a case instruction, or an address relative the address of the previous PC depends on the results of the execution. Note that the address in PC**2** register **726** is used for computations of branch addresses in the case of relative branches. If the previous instruction was not a branch instruction, then the long/short

indication output from program memory **415** indicates whether the last instruction fetch was a long or short format instruction. Depending on the indication, the program counter is incremented by the proper address displacement (i.e., +8 or +16), such that the program counter in PC**0** register **722** is updated. Note that in the present invention there are three copies of the program counter corresponding to the first three stages of the pipeline (i.e., PC**0**, PC**1** and PC**2**). In the currently preferred embodiment, all of the program counters are byte addresses that are 16 bits wide.

G. Memory to Memory. Transfer Unit **416**

The memory to memory transfer block **416** of the PR engine **525** of the present invention is an autonomous unit which can execute block memory moves of data within the PR engine address space specified in Appendix B. That is, this block may be set up in advance by the CPU **510** or the execution unit **430** to move a continuous block or blocks of data from one memory location to another without requiring further processing expenditures by either execution unit. The PR engine **525** uses this mechanism as one way to transfer pattern or result information between the on-chip memories (i.e., data memory **30** and **32** and the program memory) and the off-chip private memory **615**. The memory to memory transfer block may also transfer information between different locations of the on-chip memories and different locations between the off-chip memories but these operations require more than one memory to memory transfer operation. During execution of a program, for example a pattern recognition program, memory to memory transfers via block **416** exchange data with the program memory **415**, and the two data memories **30** and **32**. There are two separate memory transfer channels within block **416** and only one of the two channels is active at any time to transfer data between the internal and external memories. Each channel has separate registers but each channel shares the same associated operators for the memory to memory transfer operation. Since both channels share the same operators, only one channel is actively performing a memory to memory transfer operation at any time. When a channel is not active (i.e., transferring information) nor pending, it is called free. Memory transfer channels are initialized and activated by the execution unit **430** of the pattern recognition engine or may be activated by the system CPU **510**.

Refer to FIG. **14** which illustrates a block diagram of the two memory transfer channels of the memory to memory transfer block **416**. Parameters of the two memory transfer channels are stored in a two ported RAM **811**, which is organized as 8 words of 16 bits each although various different implementations would be within the scope of the present invention. Registers referenced from **810***a* to **810***d* are for channel**1** and registers referenced from **820***a* to **820***d* are for channel**0**. Them are three increment-decrement operators **818**, **816**, **817** associated with the channels, one 16-bit operator **818** the count, one 16-bit operator **816** for the internal address and one 32 bit operator **817** for the external address. The control words **810***d* and **820***d* are located outside the parameters RAM **811** since they are accessed one bit at a time and are only 5 bits wide. Internal addresses generated by memory to memory transfers are decoded and routed to the proper unit by an address decoder. Addresses corresponding to on-chip memory are sent to the execution unit **430** through a dedicated address bus in order to access the on-chip memories. External addresses of the off-chip memory are sent to the memory controller **419** for arbitration and interface. The memory to memory transfer block **419** has one dedicated address bus to send requests to the memory controller **419**.

The priority of access to the external memory are as follows from highest to lowest: 1) access from the system bus **100** made by the host CPU **510**; 2) scalar transfer from external load and store instruction executed by the execution unit **430**; and 3) memory to memory transfers which is the lowest. This priority and arbitration is resolved by the memory controller **419**.

The four parameters of FIG. **14** are described in more detail. The count registers **810***a*, **820***a* for each channel represent the number of 16-bit data to be moved by the memory to memory transfer operation. If the destination of the transfer is the program memory **415** then the count value must be a multiple of 5 16-bit words because the program memory is 80 bits wide. Both the internal and external addresses are part of the PR addressing space (see Appendix B ) and must be word aligned. The internal address **810***c* and **820***c* for both channels is an address in the on-chip memories (such as memories **30**, **32**, or **415**). The external address **810***b* and **820***b* is an address of the off-chip memory **615**. In the case of a read memory to memory transfer operation, the on-chip memory block starting the internal address (**810***c* or **820***c*) is read and transferred to the off-chip private memory **615** starting at the external address (**810***b* or **820***b*). In the case of a write memory to memory transfer operation, data is moved from the off-chip memory **615** starting at the external address (**810***b* or **820***b*) and written to the on-chip memory starting at the internal address (**810***c* or **820***c*).

If the execution unit is halted (i.e., not active), the internal address may point in any memory, such as memory **30**, **32** or the program memory **415**. If the execution unit is not halted (i.e., active), the internal address must point in memory **30** or **32**. The external address must indicate the external memory and must be word aligned. Memory **811** is a two ported RAM, one read and one write port. When memory to memory transfers are active, the read access of this memory is reserved for the memory to memory transfer logic to read parameters when it starts a transfer. The write access of the RAM is reserved for the execution unit **430** and the host CPU **510** to write parameters when initialized for a memory to memory transfer.

In order to activate a memory to memory transfer operation for a particular transfer channel of the present invention, the parameter information must be loaded into the memory **811**. For example, selecting channel **1**, the internal **810***c* and external **810***b* addresses must be loaded by the execution unit **430** or the CPU **510** and the count value must be loaded into **810***a*. Lastly, the control word **810***d* is loaded into the control register for channel**0**. It is appreciated that the act of loading the control word into the associated register initiates the transfer operation for the indicated channel. It is appreciated that the CPU **510** communicates to the memory to memory transfer block **416** via the system bus interface **418**.

Referring still to FIG. **14**, when a memory to memory transfer operation is started by the present invention, the selected channel parameters (i.e., the channel having its control register just written into) are read out of the parameter RAM **811** and stored into the working registers only if the channel is free; if the channel is busy the transfer will be pending. If channel**1** is selected then the value from **810***a* is placed into **818**, the value from **810***b* is placed into **817** and the value of **810***c* is placed into **816**. If channel**0** is selected then the value from **820***a* is placed into **818**, the value from **820***b* is placed into **817** and the value of **820***c* is placed into **816**. Register **818** is the working count register, register **816** is the working internal address register and register **817** is the working external address register. During a transfer operation, the registers stored in RAM **811** are not modified,

only the working registers are updated and contain the current addresses and remaining counts. The memory to memory transfer logic does not update the current transfer parameters located in the RAM **811**. The active transfer parameters, as discussed above, are located within the working registers which can be read from the system bus **100** when no channel is active. It is appreciated that the control words **810***d* and **820***d* can be written by the CPU **510** or execution unit **430** at any time but only read while the channels are not active.

The memory to memory transfer logic **416**, upon activation of a channel, writes the parameter information for that channel into the working registers **818**, **816**, and **817**. Upon the activation of a channel, the memory to memory transfer logic will perform all of the necessary functions (i.e., sequencing and generation of memory accessing requests to the proper destination and source) to perform the information transfer. To this extent, the memory to memory transfer block **416** is autonomous from the execution unit in that it does not require any more instruction or processing power from the execution unit. The memory to memory transfer logic then outputs the external address **817** to the memory controller and depending whether the transfer is a read or write will request a read or a write operation from the off-chip memory **615**. This request will be interfaced to the off-chip memory and arbitrated via the memory controller **419**. Simultaneously, the internal address **816** will be output to the execution unit **419** which contains the program memory **415** and the data memories **30** and **32**. Recall that all of the on-chip memories contain accessing logic from the memory to memory transfer bus **115**. Depending on the selection, read/write, of the control word, the execution unit (multiported on-chip memories) will be given a memory read or a memory write operation. The memory to memory transfer logic will decrement the count placed in the count register **818** by the decrement operator **819**. The internal address **816** will be incremented by the increment operator **821** and lastly the external address register **817** will be incremented by the increment operator **822**. According to the above, all of the working registers **818**, **816** and **817** will be updated by the memory to memory transfer block **416**. As can be seen by the above, logic of the present invention provides an independent sequencer able to generate sequential source and destination addresses and able to generate data requests to internal and external memory controllers.

Once activated, the memory to memory transfer logic **416** of the present invention will continue to repeat the above steps until the count **818** reaches zero. Then the processing of the block transfer will complete as indicated by the zero block **823**. At this point, the memory to memory transfer done flag is set, (see Appendix B and Appendix C for addresses of the flag for each transfer channel). It is appreciated that since the original parameters of a particular channel are not modified, i.e., only the working parameters are modified, the channel does not require reprogramming of the original parameter to repeat the transfer a sequential time. That is, if the same transfer is requested by the same channel a second time after a prior transfer is compete, only the control word need be rewritten. The execution unit or CPU **510** does not need to reload all of the other channel parameters again. This is advantageous because it increases pattern recognition efficiency by eliminating a program step of reloading parameters.

The following Table V illustrates the functions supported by the memory to memory transfer block **416** as defined within the control words stored in **810***d* and **820***d* for channel**1** and channel**0** respectively.

TABLE V

| Bits | Name | Comment | Value After Reset | Value After Control Word is Written | Value After Abort Command |
|---|---|---|---|---|---|
| 0 | R/W | 0: Read<br>1: Write | 0 | R/W | R/W |
| 1 | Link | 0: no Link<br>1: start next channel as soon as this one completes | 0 | Link | Link |
| 2 | Abort | 0: Keep going<br>1: Abort | 0 | 0 | 1 |
| 4–3 | MMT Memory to Memroy Transfer | 00: Inactive<br>01: Active<br>10: Pending<br>11: Aborted | 00 | 01: if other MMT of the pair is not active<br>10: if other MMT of the pair is active | 11 |
| 15–5 | | Reserved | | | |

The first bit of the control word indicates whether the memory to memory transfer (MMT) operation is to be a mad operation wherein information is read from the internal memory and stored off-chip or if the operation is a write operation wherein information is written to the internal memory from the off-chip memory. The Link bit indicates whether or not the next channel will perform a sequential memory to memory transfer operation upon the completion of the first transfer. It is possible to link sequential transfer operations together (i.e., when transferring information off-chip to both memories **30** and **32** or transferring information from these memories to an external source, among other examples). The abort bit allows the CPU **510** or execution unit **430** to abort a memory to memory transfer operation. Setting this bit to 1 aborts an active transfer and cancels a transfer which is in the pending state. If a transfer is aborted, the link bit is ignored.

Referring still to Table V, the status of a memory transfer is indicated by bits **4** and **3** of the control word of the present invention. State **00** is the inactive state, this typically indicates the end of a transfer operation for a particular channel. State **01** is the active state and a channel is in this state when the memory transfers are actually started. Writing the control word of a channel puts this channel in the active state if the other channel of the pair is not already active. State **10** is the pending state and a channel is in this state, if when it is activated, the other channel of the pair is already active. If the other channel of a pair is already active, the second channel must wait on completion of the first channel before

it can start its transfer of data; while waiting this channel is pending. Lastly, state **11** is the aborted stated. A channel whose transfer is aborted because it receives an abort command or because it has a parity error or an address range error will end in this state. When a control word, such as **810***d* or **820***d*, is written by the host CPU **510** or the execution unit **430** only bits **0**, **1** and **2** are written. The status bits **3** and **4** are read only for the host CPU and for the execution unit, these bits can only be written by the memory to memory transfer logic.

FIG. **15** illustrates a flow chart of the major states and events executed by each channel of the memory to memory transfer block **416** of the PR engine **525** of the present invention. At state **830** the current channel, either channel**0** or channel**1**, is inactive. The current channel may be activated at event **831** by a write of its control word, or by the count of the other channel reaching zero and the link bit set to 1 of the other channel's control word. Since channels are activated by writing the control word, the control must be the last parameter of a memory transfer to be written within the present invention. When the control word of a channel is written, the corresponding done signal in the flag register is reset to zero (see Appendix B and Appendix C for flag locations). Upon event **831** occurring, the memory to memory transfer channel will go to the pending state **832** if the channel is not free, that is, if the other channel is active. If the other channel is not active, then the current channel will flow to the active state **833** where the current channel will begin transfer operations and data is moved. If an abort event **837** is generated by the execution unit **430** or by the CPU **510**, then the aborted state **836** will be entered and a done flag will be generated by the current channel. This channel will remain in the aborted state unit an activation event **831** is encountered.

If not aborted by **837**, the current channel will remain processing the memory to memory transfer, and will update the working registers until the count register **818** becomes zero. At this event **838**, the current channel will generate a done flag, indicate channel free information for the other channel and return to the inactive state. If the link bit of the active transfer is set to 1, the other channel is activated as soon as the active transfer is done. When in the pending state **832**, if an abort event **832** is encountered then the current channel will generate a done flag and return to the abort state **836** without having transferred any data. At this time any link information will be ignored. At the pending state **832**, if the current channel becomes free, via event **835**, then the current channel will flow from the pending state to the active state **833** and the above discussions apply. It is appreciated that if the link bit of the aborted transfer is set to 1, it is ignored and the second transfer is not started. When an active transfer is aborted, then channel free information is generated for the other transfer channel to be activated if it is pending. If the transfer is pending when it receives the abort command the status is changed from pending to aborted.

Data returning from the external memory **615** have the highest priority in the data memories **30** and **32** and program memory **415**. If data fetched by a transfer channel operation is creating conflict of access in one of these internal memories, between the memory transfer block **416** and the execution unit **430**, the execution unit will temporarily stall. However, to prevent the execution unit from stalling for too long a period of time when a conflict occurs, the execution unit **430** requests the channel to insert an empty slot in its pipeline of requests to external memory, for the execution unit to perform the write operation in memory **30**, memory **32** and resume execution of the program. When a channel is reading memory **30** or **32** it has lower priory over the execution unit **430**. It must wait on the execution unit **430** to make the data available before sending the write request to the external memory. It is appreciated that with regard to conflicts between memory read operations from the external memory and read operations from the execution unit **430**, the MMT transfer block **416** takes low priority with reference to the execution unit of the PR engine **525**. This is the case so that the MMT block and the execution unit **430** maintain parallelism in operation. However, with respect to conflicts between write operations to external memory locations, the MMT block takes priority over the execution unit and will act to stall the execution units as discussed above during conflicts. So that the execution units **430** do not stall for too long a period, requests are given to allow the MMT block to delay for a transfer cycle and allow the execution unit **430** to operate.

The memory to memory transfer block **416**, as described above may be utilized to transfer two non contiguous blocks of dam, one channel can be used for each block. Both channels can be initialized and started by writing their control words. Waiting on the done flag of the channel which is started last is equivalent to waiting on both memory to memory transfer done flags. Another use of the above memory transfer features is if both the host CPU **510** and the execution unit **430** need to transfer dam between the on-chip memory and the off-chip memory. Once way to avoid access conflicts the two channels between the host CPU **510** and the execution unit **430** is to dedicate one channel to the execution unit and one channel to the CPU **510**. As long as the link bits are both 0, the two channels are totally independent, but only one channel is active at a time.

Double Buffering the Data Memories and the Off-chip Memory

The following discussion illustrates how the memory to memory transfer functions can be utilized within the PR engine **525** of the present invention to perform double buffering operations between data memory **30** (used with the distance arithmetic pipeline) and the off-chip private memory **615** that contains the reference patterns for comparison. It is appreciated that while the below discussion refers to memory **30**, this discussion applies equally well to memory **32** in that information from on-chip **32** may be doubled buffered between external memory **615**. Refer to FIG. **16**. Recall that memory **30** may be utilized by the distance arithmetic pipeline **38** for containing data representing an unknown pattern form comparison and also used for containing dam representing one of the reference patterns for comparison. The distance arithmetic pipeline **38**, under direction of a program stored within program memory **415**, will then compare, point by point, each point of the unknown pattern against each point of the known reference pattern. The present invention advantageously creates three buffers, two buffers referenced **860***a* and **860***b*, within the memory **30** for receiving reference pattern data and an other, third, buffer **860***c* for holding the input unknown pattern.

Double buffering between the external memory **615** and the on-chip memories is particularly effective within the present invention due to the multiported nature of the on-chip data memories **30** and **32**. Recall that memories **30** and **32** have at least two read address ports (**30***d* and **30***c*) and two read data ports (**35** and **44**) so that two operands can be accessed by each arithmetic pipeline per instruction. However, each of the memories **30** and **32** also contains an additional and separate write address port (**30***a*) and separate write data port (**30***b*) so that write operations may be

performed in conjunction with read operations. In summary, write operations (i.e., memory to memory transfers into the data memories) can occur in parallel with read operations (i.e., accessing of operands and arithmetic operations) within instruction cycles. In this way double buffering may be accomplished by the preferred embodiment of the present invention.

In operation, the present invention loads one of the buffers **860***a*, **860***b* with a known reference pattern while the other of the buffers is actively being used by the arithmetic pipeline for comparison against the unknown pattern. Once the comparison step is complete the buffers switch tasks. This is done so that no additional time is consumed for the load operation. In so doing, the present invention offers an efficient and powerful method of memory transfer and comparison processing.

For example, with reference to FIG. **16**, an unknown handwriting pattern may be loaded into the buffer **860***c* by the host CPU **510** or by the execution unit **430** of the PR engine **525**. Next a pattern representing the letter "a" may be loaded into buffer **860***b* by using channel**0** of memory to memory transfer block **416** and: 1) setting the internal address parameter **820***c* to the start address of buffer **860***b;* 2) setting the count parameter **820***a* to the number of points of the known pattern "a"; and 3) setting the start address of the location of the known pattern within buffer **615***a* of private memory **615**. A write control word is then written into control word **820***a* to start the transfer.

Then, while the arithmetic pipeline **38** is performing a comparison of the patterns in buffers **860***b* and **860***c*, channel**1** may be setup to buffer the reference pattern for letter "b" into buffer **860***a* using the memory to memory transfer block **416** and: 1) setting the internal address parameter **810***c* to the start address of buffer **860***a;* 2) setting the count parameter **810***a* to the number of points of the known pattern "b"; and 3) setting the start address of the location of the known pattern within buffer **615***b* of private memory **615**. A write control word is then written into control word **810***a* to start the transfer. The transfer will then occur simultaneously with the comparison functions of the arithmetic pipeline **38** and buffers **860***b* and **860***c*.

Next, the arithmetic pipeline **38** is directed, by programming logic within the program memory, to compare the buffers **860***a* and **860***c* to compare the letter "b" against the unknown pattern. While this is occurring, the present invention will be loading the pattern for letter "c" into buffer **860***b*. The internal address parameter **820***c* for channel**0** is already set to the start address of buffer **860***b* from the prior operation. The count parameter **820***a* is already set to the number of points of the known pattern, because they are all the same typically. Only the start address of the location of the known pattern within buffer **615***c* of private memory **615** need be loaded. A write control word is then written into control word **820***a* to start the transfer. Therefore, upon subsequent memory to memory transfers, less load instructions need be given because some channel parameters can be reused. Again, because the working registers **818**, **816**, **817** are updated, and not the channel parameters, the present invention may advantageously perform the above short cut. At the completion of the comparison operation between buffers **860***a* and **860***c*, the present invention then utilizes channel**1** to load the pattern for letter "d" while performing a comparison against buffers **860***c* and **860***b*. This transfer is accomplished by: 1) loading the external address of **810***b* as the start address of buffer **615***d* and then writing a write control word into buffer **810***d*.

It is appreciated that the above double buffering system may be used to bring in all of the reference pattern patterns, one at a time, into the memory **30** buffers while at the same time comparing the pattern data via arithmetic pipeline **38**. Each of the two transfer channels is assigned a particular buffer within memory **30**. Here, channel**0** was assigned to buffer **860***b* and channel**1** assigned to buffer **860***a*. It is appreciated that since the channel parameters are not directly updated (i.e., the working copy is updated) the present invention does not need to reload these values upon each transfer operation when duplicates are desired, thus saving processing time.

It is also appreciated that the memory to memory transfer block **416** may be utilized for these memory transfers without consuming processing power from the execution unit **430** of the present invention. The double buffering technique described above allows memory transfers of the prototype library **615** to occur in parallel with arithmetic pipeline processing of the pattern data, thus further reducing overall pattern recognition time.

## VI. Specialized Instructions within the Present Invention

### A. The Case Instruction

The case instruction is a special control flow instruction within the present invention which, in response to a set of predetermined conditions, allows a program to branch to a selection of addresses. For example, if either condition **1**, **2**, **3**, or **4** is met, the program branches to either address **1**, address **2**, address **3** or address **4**, respectively.

The present invention uses condition bits produced within the control flow pipeline to facilitate execution of the case instruction. By using condition bits, the present invention PR engine is able to execute a case instruction in one cycle. In the currently preferred embodiment, the condition bits are flags. In the currently preferred embodiment, four condition bits are produced by the control flow pipeline. The condition bits can be used individually, to test a loop counter for example, or used in groups to generate state numbers. The state numbers represent the different labels of a case statement.

An example of the use of a case instruction can be illustrated from the four conditions depicted below:

Case A: $X \geqq 0$ and $Y<0$

Case B: $X<0$ and $Y \geqq 0$

Case C: $X \geqq 0$ and $Y \geqq 0$

Case D: $X<0$ and $Y<0$

Only two condition bits are required in the example above:

Cond**0**=$X<0$

Cond**1**=$Y \geqq 0$

Table VI below illustrates condition bit values for the example.

TABLE VI

| Case Number | COND1 | COND0 | Case Label |
|---|---|---|---|
| 0 | 0 | 0 | A |
| 1 | 0 | 1 | D |
| 2 | 0 | 0 | C |
| 3 | 1 | 1 | B |

The states of condition bits COND**1** and COND**0** define a register number in the control register. To implement the case instruction, the control registers must be initialized such that control register CR**0** contains the address corresponding to Label A, control register CR**1** contains the address corresponding to Label D, control register CR**2**

contains the address corresponding to Label C, and control register **CR3** contains the address corresponding to Label B.

Control registers **CR0–CR3** are initialized outside of the portion of the program encompassing the case instructions (i.e., the outer loop). The condition bits **COND0** and **COND1** need to be updated by the programmer every time X or Y changes value. A single case (i.e., **COND1**, **COND0**) instruction is capable of branching to the correct code (i.e., address) after each iteration depending on the new value of X and Y. Therefore, in the present invention, conditions bits are used to define the separate states which may result from execution. Then the states are mapped with a label (e.g. A, B, C, D, etc.). A number is assigned to each label. In the present invention, the number depicting each state indicates a distinct control register number.

At the beginning of the loop, the control registers are set up with all of the different labels, such that the initialization is performed only once. In this manner, the addresses associated with the available branching locations within the case instruction do not have to be encoded in the instructions. In the currently preferred embodiment, the control pipeline uses conditions to generate a number corresponding to a control register. The control register that corresponds to the state of the conditions is read to obtain the address of the target, which is subsequently stored into the program counter in the control pipeline, such that a branch occurs to that address. In the currently preferred embodiment, each instruction is capable of utilizing four condition bits. Therefore, up to sixteen labels can be associated with one case instruction. In this manner, in the present invention, a conditional jump can be set up to branch to sixteen separate locations upon the occurrence of sixteen distinct conditions or sets of conditions.

It should be noted that the condition bits can be generated by a program or can be loaded by a value of any flag in the processor. Thus, the condition bits can be loaded with any flag generated in the co-processor, such that any flag can be used in conjunction with the case instruction. A case instruction removes the need for multiple conditional branches or multi-branch code. Using condition bits allows the present invention to implement a case instruction in which each condition is associated with a different address. By not having the addresses encoded within the code, the time to load each of the separate and distinct addresses is also avoided. In this manner, a case instruction can be executed in one cycle.

The Execution of a Case Instruction

As discussed above, prior to the execution of a case instruction, the control registers in the control flow pipeline are initialized with the addresses of the different pieces of code associated with each possible state tested in a case statement. In other words, a label corresponding to a state number is associated with one of the control registers. As the program is executed, condition bits are set by the operator of the control flow pipeline. These condition bits are stored in the flag register. In one embodiment, a condition decoder could be used to decode the condition bits in a manner well-known in the an. Depending on the state defined by the condition bits at the time a case instruction is executed, a control register is chosen which outputs the target address (i.e., the branch address) for the program counter.

An example using a case instruction is given below. The example shown is in high level code:

```
If (a<b) and (a<c) then d1 = (b–a) + (c–a)        /* case 1 */
else if (b<a) and (b<c) then d2 = (a–b) + (c–b)   /* case 2 */
else if (c<a) and (c<b) then d3 = (a–c) + (b–c)   /* case 3 */
```

Each of the condition bits is associated with an equality. A truth table for the inequality is shown below.

| | Cond 2<br>a < b | Cond 1<br>a < c | Cond 0<br>b < c |
|---|---|---|---|
| Case 1: | 1 | 1 | 0 or 1 |
| Case 2: | 0 | 0 or 1 | 1 |
| Case 3: | 0 or 1 | 0 | 0 |

Each of the separate cases is then associated with a control flow register. For instance:

| State Number | Case Number |
|---|---|
| 6 and 7 | Case 1 |
| 1 and 3 | Case 2 |
| 0 and 4 | Case 3 |

An example of the pseudo code for the example is given below. Initially, the control registers are initialized with the addresses of the different pieces of code associated with each state number:

```
        CR6 = &Label_Case1;
        CR7 = &Label_Case1;
        CR1 = &Label_Case2;
        CR3 = &Label_Case2;
        CR0 = &Label_Case3;
        CR4 = &Label_Case3;
Loop_address:
        /* read new value of a, b and c in memory */
        get (a, b, c)
        /* evaluation of the condition bits */
        Cond 0 = (a<b);
        Cond 1 = (a<c);
        Cond 2 = (b<c);
        /* use the case instruction to branch to the right code
directly) */
        Case (cond0, cond1, cond2);
        /* cod for the different cases */
Label_Case1: compute d1;
        loop over n;
Label_Case2: compute d2;
        loop over n;
Lable_Case3: computer d3;
        loop over n;
```

Upon the execution of the instructions: (Cond**0**=(a<b); Cond**1**=(a<c); Cond**2**= (b<c); condition bits are set and stored in the flag register. When a case instruction is executed, AND gate **705** performs a logical AND between the condition bits and the condition bit mask, which is encoded in the case instruction. The condition bit mask is set according to the instruction to provide the requisite condition bits to address the control register. In the currently preferred embodiment, the output of AND gate **705** is 4 bits. After ANDing the condition bit mask and the condition bits, control register file **707** is accessed, via read port **RA1**, with the bits from AND gate **705**. In other words, the state numbers and the control registers are related, such that they may be accessed. The data, which corresponds to the address for the branch, is latched and passed through arithmetic

operator to PC logic **710** in order to update the program counter. In this manner, the case instruction is executed in one cycle.

Note that although the currently preferred embodiment uses four condition bits and sixteen control flow registers for holding addresses, any number of condition bits and control registers may be used. Also note that the addresses of the different pieces of code to be executed could be stored in a general purpose register file or on-chip memory, instead of the control registers.

B. Manhattan Distance Instruction of the Present Invention

The Manhattan distance function is useful in pattern recognition processing. The arithmetic pipelines of the present invention can execute a specialized Manhattan distance instruction that performs subtraction between two operands and selects the absolute value of the result within a single instruction cycle. This instruction is useful within DTW and HMM procedures and therefore circuitry was placed into each arithmetic pipeline in order to accomplish, in high speed, this instruction. The Manhattan distance transfer instruction is called "absolute value of a difference" and is found within Appendix A as opcode number 1BH.

There are two operators within the operator unit **70** of each arithmetic pipeline that can perform subtraction. Referring to FIG. **8**, the adder/subtractor **70***b* and the ALU operator **70***c* may perform subtraction operations on the two sources **68** and **69**. According to the present invention execution of a Manhattan distance function, is accomplished by first loading into the two sources **68** and **69** the values of the two operands involved in the transfer function. Next, the ALU operator **70***c* performs a subtraction between the sources and at the same time the operator **70***b* performs a subtraction between the two sources in a different order than that specified by the ALU operator **70***c*. In order words if ALU **70***c* subtracts source**1** from source**2** then operator **70***b* will subtract source**2** from source**1**. The results of both operations are then fed to multiplexer **72**.

Multiplexer **72** contains the required circuitry to determine when a Manhattan distance function is being executed (by analyzing the ALU opcode associated with the pertinent ALU instruction) and also contains logic to determine which of the two operator outputs (i.e., from operator **70***b* and **70***c*) is a negative result. The multiplexer **72** will then select the positive (or non-negative) result of the operator outputs and channel that result to the accumulator **74**. In so doing, the absolute value and subtraction functions are executed by an arithmetic pipeline of the PR engine **525** of the present invention within a single instruction cycle in order to provide rapid calculation of this operation.

## VII. Program Examples for Lower Level Procedures

A. Dynamic Time Warping Pattern Recognition Example

As discussed, the PR engine **525** of the present invention has been architected for DTW to take full advantage of all the available pipelines. The unknown and the reference patterns may be stored in the data memory **30**. The reference library is stored in the private memory **615**. The arithmetic pipeline **38** may be used to compute local distances between the points of the patterns stored within memory **30**. Reference patterns are double buffered between memory **30** and external memory **615**, for the next reference to be brought from the external memory via a memory to memory transfer during the comparison of the unknown with the current reference by arithmetic pipeline **38**. Two columns of the results (lattice) are required at all times. They are stored in the data memory **32**. The arithmetic pipeline **40** may be used to compute the best paths, and accumulate the results with the local distances. The pointer pipelines are used to keep track of addresses of the unknown and reference patterns stored within memory **30**, and of the two working columns of results in memory **32**. Of course, the control pipeline **454** is used to control the loop of the pattern recognition program stored in program memory **415**.

The following program code of the present invention, modeled after the "C" program language, computes a lattice of points of size (MAXPOINTS+1)× (MAXPOINTS+1). It is supposed that memory **30** has been initialized (by the host CPU **510**) with the series of points representing the unknown and the reference pattern. To this extent, the following code may be viewed as a detailed instruction sequence for flow block **404** or block **405** of FIG. **4**. In this example, a point has three features: x, y, and z. Each feature is three bytes wide. It is appreciated that operations within the same line of the program code may be performed within one instruction cycle of the execution unit **430**. It is further appreciated that although the following program code is applied to process handwriting patterns it could easily be extended to refer to voice recognition applications on voice patterns.

The below contents of the PR engine **525** are assigned the following functions and identifies. Memory **30** is used to hold the unknown character and the current reference. Pointer usage in memory **30** (pointers should be initialized prior to code) is: Pt**1** is the beginning of the reference; Pt**2** is the running pointer to the reference; Pt**3** is the x feature of the unknown; Pt**4** is the y feature of the unknown; and Pt**5** is the z feature of the unknown. Memory **32** holds the two columns of the results. Pointer usage in memory **32** (pointers should be initialized prior to code) is: Pt**8** is start of buffer**1**; Pt**9** is current column; Pt**10** is start of buffer**2**; and Pt**11** is previous column. General purpose register usage is: R**1** is dx; R**2** is dy; R**3** is dz; and R**4** is minimum and accumulator. Control register usage is: CR**1** is first column loop label; CR**2** is outer loop label; CR**3** is inner loop label; CR**14** is column count; and CR**15** is row count. It is appreciated that due to certain execution sequencing techniques within the present invention, two arithmetic pipeline instructions are allowed to execute following the indication of a conditional branch instruction before the branch instruction is actually performed. Therefore, these following instructions should be viewed as executing prior to the actual branch instruction, which branch instruction may be placed before the two instructions in the program code.

DTW Program of the Present Invention:

```
#define MAXPOINTS 39
/* use buffer2 to store first column */
Pt11=Pt10;
/* first point computation for x, y, z features */
R1 = |*Pt2 − *Pt 3|, Pt2++;
R2 = |*Pt2 − *Pt4|, Pt2++, R4=R1;
R3 = |*Pt2 − *Pt5|, Pt2++, R4=Acc2 + R2;
*Pt11 = Acc2 + R3;
/* computation of the first column */
CR15 = MAXPOINTS;
CR1=&first_column;
first_column:
R1 = |*Pt2 − *Pt3|, Pt2++, CR15 —;
R2 = |*Pt2 − *Pt4|, Pt2++, R4=*Pt11+R1,
Pt11+2, Branch(NC) CR1;
```

-continued

DTW Program of the Present Invention:

```
R3 = |*Pt2 − *Pt5|, Pt2++, R4 = Acc2 + R2;
*Pt11 = Acc2 + R3;
/* compute all of other columns */
/* reset Pt11 to beginning of the previous column,
in buffer2 */
Pt11 = Pt10;
/* use buffer1 to store first current column */
Pt9 = Pt8;
/* init outer loop counter and branch addresses */
CR14 = MAXPOINTS;
CR2 = &outer_loop;
CR3 = &inner_loop;
/* init R5 used to compute new pointers */
R5 = 3;
outer_loop:
/* init inner loop counter */
CR15 = MAXPOINTS;
/* init unknown pointer to next set of points */
Pt3 = Pt3 + R5;
Pt4 = Pt4 + R5;
Pt5 = Pt5 + R5;
/* reset reference pointer to first point */
Pt2 = Pt1;
/* compute first point of the column */
R1 = |*Pt2 − *Pt3|, Pt2++
R2 = |*Pt2 − *Pt4|, Pt2++, R4 = *Pt11 + R1;
R3 = |*Pt2 − *Pt5|, Pt2++, R4 = Acc2 + R2;
*Pt9 = Acc2 + R3
/* compute all other points of the column */
/* note that the inner loop executes in only 5 cycles */
inner_loop:
R1 = |*Pt2 − *Pt3|,Pt3++, R4 = min(*Pt9,*Pt11), Pt11+=2;
R2 = |*Pt2 − *Pt3|,Pt3++, R4 = min(*Pt11,Acc2), Pt9+=2,
CR15—;
R3 = |*Pt2 − *Pt3|,Pt3++, R4 = Acc2 + R1, Branch(ZC)
CR3;
R4 = Acc2 + R2;
*Pt9 = Acc2 + R3;
/* swap current and previous column and loop for all cols */
Pt11 = Pt8, CR14—;
Pt9 = Pt10, Cond0=(CR14==0);
/* exchange pointers of buffers 1 and 2 */
Pt12 = Pt8, Branch(Cond0) CR2;
Pt8 = Pt10;
Pt10 = Pt12;
```

Used in conjunction with the above program sequence is a double buffering technique for loading the reference patterns into memory **30** and this involves a memory to memory transfer operation between the memory **30** and the private memory **615** over the memory bus **110**. Also performed is a memory to memory transfer operation for transferring data between memory **32** (the best path memory) and the memory space of the CPU **510** over the system bus to 100.

B. Hidden Markov Models Pattern Recognition Example

HMM models are usually too large to fix in the on-chip data memories. A model for a given prototype reference is the set of distribution probabilities, for all features, in all states, and for all possible features values. These probabilities can be organized in vectors, per feature and per state, or per feature and per feature value. The latter is assumed in the program example to follow. Vectors are brought in the data memory **30** one set at a time, for computations of one column of the lattice. During the computation of a column, the next set of distribution probabilities is brought in memory **30** using a memory to memory transfer operation. Local probabilities are computed in the arithmetic pipeline **38** and the best paths are computed in the arithmetic pipeline **40**. The transition probabilities are kept in memory **32**. The two columns of temporary results, the previous column, and the current column are also stored in data memory **32**. The pointer pipelines are used to keep track of addresses in the probability vectors in memory **30**, the transition probabilities, and temporary results in memory **32**. The control pipeline is used to manage the loop.

In the following "C" modeled program code these definitions are given. Memory **30** is used to hold the unknown character and the probability vectors for the current observation point. For memory **30**, Pt**1** is the distribution probability for feature x, and observation i, Pt**2** is similar for feature y, and Pt**3** is similar for feature z. Memory **32** is used to hold the two columns of results and the transitions probabilities. For memory **32**, Pt**8** is the beginning of buffer**1**, Pt**9** is the current column, Pt**10** is the beginning of buffer**2**, Pt**11** is the previous column, Pt**12** is the previous column, current state, Pt**13** is the start of transition probabilities, and Pt**14** is the running transition probabilities. The general purpose registers are defined such that **R1** is the local probability and **R4** is the maximum and accumulator. Of the control registers, **CR1** is the first column loop label, **CR2** is the outer loop label, **CR3** is the inner loop label, **CR14** is the column count, and **CR15** is the row count.

HMM Program of the Present Invention:

```
#define MAXPOINTS 39
#define MAXSTATES 9
/* start memory to memory transfer to bring mext set of
distribution probability vectors into memory 30 from external
memory 615 (code not shown) */
/* use buffer 2 to store first column */
Pt11 = Pt10;
Pt12 = Pt11;
Pt12 +=2;
/* first point computation */
R1 = *Pt1 + *Pt2, Pt1++;
R1 = Acc1 + *Pt3, Pt2++'
Pt3++, *Pt 11 = R1;
/* computation of the first column */
CR15=MAXSTATES'
CR1 = &first_column;
first_column:
R1 = *Pt1 + *Pt2, Pt1++, R4=*Pt11 + *Pt14, Pt14++,
CR15—;
R1 = Acc + *Pt3, Pt2++, Pt11 +2, Branch (ZC) CR1;
Pt3++; *Pt12 = Acc2 + R1, Pt12 +=2;
/* computation of other columns */
/* reset Pt11 to start of the previous column, in buffer2 */
Pt11 = Pt10;
/* use buffer1 to store first current column */
Pt9 = Pt8;
/* init output loop counter and branch addreses */
CR14 = MAXPOINTS;
CR2 = &outer_loop;
CR3 = &inner_loop;
/* init R6 to 2 to use as an index */
R6 = 2;
outer_loop:
/* init inner loop counter */
CR15 = MAXSTATES;
/* reset Pt14 to beginning of transition probability */
Pt14 = Pt13;
/* Check if memory to memory transfer is done, wait if not
done, init distribution probability pointer to new set of
vectors, start memory to memory transfer for next observation
point, (this code not shown) */
/* compute first point of the column */
R1 = *Pt1 + *Pt2, Pt1++; R4 = *Pt11 + *Pt14, Pt14++;
R1 = Acc1 + *Pt3, Pt2++;
Pt3++, *Pt9 = Acc2 + R1, Pt9 +=2;
/* compute all other points of the column */
/* note inner loop executes in only 4 cycles */
inner_loop:
R1 = *Pt1 + *Pt2, Pt1++, R5 = *Pt11 + *Pt14, Pt14++,
```

-continued

HMM Program of the Present Invention:

```
CR15—;
R1 = Acc1+*Pt3,Pt2++,R4=*(Pt11+R6)+*P14,Pt14++,
Branch(ZC) CR3;
Pt3++, R4=max(R5, Acc2), Pt11 += 2;
/* swap current and previous column in memory 32 and loop for
all columns */
Pt1 = Pt8, CR14—;
Pt9 = Pt10, Cond0 = (CR14==0);
/* exchange pointers of buffers 1 and 2 */
Pt12 = Pt8, Branch (Cond0) CR2;
Pt8 = Pt10;
Pt10 = Pt12;
```

It is appreciated that although the above program code is applied to process handwriting patterns, it could easily be extended to refer to voice recognition applications on voice patterns.

The preferred embodiment of the present invention, a multiprocessing pattern recognition system having a private memory unit for coupling to an otherwise general purpose computer system for performing high speed pattern recognition procedures, for example, for handwriting and/or voice identification applications, is thus described. While the present invention has been described in several particular embodiments, it should be appreciated that the present invention should not be construed as limited by such embodiments but rather construed according to the below claims.

| Opc. | Operation | Name | Flags |
|---|---|---|---|
| OH | Nop | No operation | |
| 1H | Src1 -Byte- Zero-Ext | First Operand (unsigned byte) | |
| 2H | Src1 -Byte- Sign-Ext | First Operand (signed byte) | |
| 3H | Src 1 | First Operand (word) | |
| 4H | Src2-Byte-Zero-Ext | Second Operand (unsigned byte) | |
| 5H | Src2-Byte-Sign-Ext | Second Operand (signed byte) | |
| 6H | Src2 | Second Operand(word) | |
| 7H | Src1 + Src2 | Add | N, Z, C, O |
| 8H | addu Src1 + Src2 | Unsigned Add | Z, C |
| 9H | Src1 + Src2 + CIN | Add with Carry | N, Z, C, O |
| AH | Src1 – Src2 | Sub | N, Z, C, O |
| BH | subu Src1 – Src2 | Unsigned Sub | N, Z, C, O |
| CH | Src2 – Src 1 | Reverse Sub | N, Z, C, O |
| DH | subu Src2 – Src1 | Unsigned Reverse Sub | Z, C |
| EH | Src1 – Src2 – CIN | Sub with Carry | N, Z, C, O |
| FH | Src2 – Src1 CIN | Reverse Sub with Carry | N, Z, C, O |
| 10H | Src1 & Scr2 | Logical And | Z |
| 11H | Src1 \| Src2 | Logical Or | Z |
| 12H | ~Src1 | Logical Not First Operand | Z |
| 13H | ~Src2 | Logical Not Second Operand | Z |
| 14H | Src1 ^ Src2 | Logical Xor | Z |
| 15H | ~(Src1 & Src2) | Logical Nand | Z |
| 16H | Rd = 16 bit immediate | Load Immediate | |
| 17H | Min (Src1, Src2) | Minimum | MM |
| 18H | UMin (Scr1, Src2) | Unsigned Minimum | MM |
| 19H | Max (Src1, Src2) | Maximum | MM |

-continued

| Opc. | Operation | Name | Flags |
|---|---|---|---|
| 1AH | UMax (Src1, Src2) | Unsigned Maximum | MM |
| 1BH | \|Src1 – Src2\| | Absolute Value of Difference | N=0, Z, C=0, O |
| 1CH | Src1 >> Src2 | Right Shift | N=0, Z, C |
| 1DH | Src1 << Src2 | Left Shift | N, Z, C |
| 1EH | Src1 Arith >> Src2 | Arithmetic Right Shift | N, Z, C |
| 1FH | Src1 Right Rot Src2 | Right Rotate | N, Z |
| 20H | Src1 Left Rot Src2 | Left Rotate | N, Z |
| 21H | Src1? Src2 | Compare | N, Z, C=0, O=0 |
| 22H | UComp Src1? Scr2 | Unsigned Compare | N, Z, C=0, O=0 |
| 23H | imull Src1 * Src2 | Integer multiply (lower half) | N, Z, C, O |
| 24H | imulh Src1 * Src2 | Integer multiply (upper half) | N, Z, C=0, O=0 |
| 25H | umull Src1 * Src2 | Unsigned multiply (lower half) | Z, C |
| 26H | umulh Src1 * Src2 | Unsigned multiply (upper half) | Z, C=0 |
| 27H | TstSt | Test and Set | |
| 28H | rpr | Read Pointer Register | |
| 29H | rcr | Read Control Register | |
| 2AH | rsr | Read Special Register | |
| 2BH | wsr | Write Special Register | |
| 2CH | Ext Byte Ld - Zero Extend | External byte Load Zero Extend | |
| 2DH | Ext Byte Ld - Sign Extend | External Byte load Sign Extend | |
| 2EH | Ext Byte St | External Byte Store | |
| 2FH | Ext Word Ld | External Word Load | |
| 30H | Ext Word St | External Word Store | |
| 31H | itp | Interrupt | |
| 32H-3FH | Reserved | | |

APPENDIX B

| Selector | Offset | Name |
|---|---|---|
| 0000 to FFFE | 0000H–FFFFH | Private Memory 615 |
| FFFF | 0000H–01FFH | Mem 32 (256 × 16 bits) |
| FFFF | 2000H–3FFFH | Reserved |
| FFFF | 4000H–41FFH | Mem 30 (256 × 16 bits) |
| FFFF | 4200H–7FFFH | Reserved |
| FFFF | 8000H–8FFFH | Program Memory 415 |
| FFFF | 9000H–EFFFH | Reserved |
| FFFF | F000H–FFFFH | iPR Engine Registers |

| Offset | Name |
|---|---|
| F162H–F163H | Accumulator 2 |
| F160H–F161H | Accumulator 1 |
| F140H–F15FH | GPR: RO–R15 |
| F120H–F13FH | Pointer Registers: PO–P15 |
| F100H–F11FH | Control Registers CRO–CR15 |
| F0FCH–F0FFH | Flag Registers |
| F072H–FOFBH | Reserved |
| F070H–F071H | Data Port |
| F05CH–F06FH | Reserved |

-continued

APPENDIX B

| | |
|---|---|
| F054H–F05BH | Active Channel Parameters |
| F040H–F053H | PR Engine Channel Parameters |
| F016H–F03FH | Reserved |
| F014H–F015H | Signature |
| F012H–F013H | Timer 2 |
| F010H–F011H | Timer 1 |
| F00EH–F00FH | Timers Control |
| F00CH–F00DH | Reserved |
| F00AH–FOOBH | Memory Configuration |
| F008H–F009H | Mask Register |
| F006H–F007H | PR Engine Status Word (High) |
| F004H–F005H | PR Engine Status Word (Low) |
| F002H–F003H | Command Register |
| F000H–F001H | Program Counter: PC |

APPENDIX C
Short Control Instructions
Short Control Instruction Format

| 1 bit | 3 bits | 4 bits |
|---|---|---|
| 0 | Opcode | CRn |
| 0 | 000 CRn = CR0 | CRn |
| | 001 CRn = Immediate(*) | |
| | 010 CRn = Regf(*) | |
| | 011 CRn = CRn − 1 | |
| | 100 Cond0 = (CRn ==0) | |
| | 101 Branch Absolute (if Cond0) CRn | |
| | (*) Regf and Immediate are fields of the ALU instruction. | |
| 0 | 110 Cond0 = Flag n | Flag n |
| 0 | 111 Case (Cond Mask) | Cond Mask |

CRn=CRn−1

This instruction decrements the control register CRn by one. Flags NC (Negative in Control Pipe) and ZC (Zero in Control Pipe) are affected. In the currently preferred embodiment, the register specifier n is a number from the set [0 . . . 15], representing one of the 16 control registers.

CRn=Immediate

The control register CRn is loaded with the 16 bit immediate field of the ALU instruction. No flags are affected. No ALU or pointer instructions can be grouped with this control instruction. In the currently preferred embodiment, this control instruction must be by itself in a short control instruction. The register specifier n is a number from the set [0 . . . 15]. With long control instructions, one can load immediate values in a control register, but these immediate values are 8 bit wide.

CRn=Regf

APPENDIX C (Cont'd)

The control register CRn is loaded with the content of the general purpose Regf. The general purpose register Regf is specified in the ALU instruction (which has to be an ALU1 instruction). Flags NC and ZC are affected. In the currently preferred embodiment, the general purpose register specifier Regf is a number in the set [0 . . . 15], and the register specifier n is a one number from the set [0 . . . 15].

Cond**0**=(CRn==0)

The content of the control register CRn is compared to 0. If CRn is equal to 0, the condition bit Cond**0** (Condition Bit **0**) is set to 1. If CRn is different from 0, the condition bit Cond**0** is reset to 0. In the currently preferred embodiment, the register specifier n is a number from the set [0 . . . 15]. In the currently preferred embodiment, this instruction can only be a short control instruction.

CRn=CR**0**

The control register CRn is loaded with the content of control register CR**0**. In the currently preferred embodiment, register specifier n is a number from the set [0 . . . 15]. No flags are affected. If n is equal to 0, this instruction is a nop.

Cond**0**=Flag n

The condition bit Cond**0** is set to 1 if flag n is 1, and reset to 0 if flag n is 0. Note that in the currently preferred embodiment only the first 16 flags can be used in this instruction.

Branch Absolute (if Cond**0**) CRn

If the condition bit **0** is set to 1, the program counter PC is loaded with the content of the control register CRn. If the condition bit **0** is equal to 0, the branch is not executed, and the program counter PC is incremented normally. In the currently preferred embodiment, the register specifier n is a number from the set [0 . . . 15].

Case (Cond Mask)

The four condition bits are ANDed with the mask Cond Mask, which is the last field of this instruction to give a 4 bit index I which addresses the control registers. The program counter is loaded with the content to the control register CR**1**. I=Cond[3 . . . 0] & Cond Mask. PC=CR**1**. Index I is a number from the set [0 . . . 15].

APPENDIX C (Cont'd)

Long Control Instructions
Long Control Instruction Format

| Form | 1 bit | 3 bits | 3 or 4 bits | 5 or 4 bits | 4 bits |
|---|---|---|---|---|---|
| Form1 | 1 | 0 x x | CRm | Cond p | CRn |
| Form2 | 1 | 10 x | | 8-bit integer | CRn |
| Form3 | 1 | 110 | 000 x | CRp (4 bits) | CRn |
| Form4 | 1 | 110 | x x 1 | Flag q (5 bits) | Cond n |
| Form5 | 1 | 110 | 111 | | Cond Mask |
| Form6 | 1 | 111 | x x x | Flag q (5 bits) | CRn |

The following table specifies, for each format, the opcodes and the corresponding instructions in the currently preferred embodiment. Note that the opcode width is different for each type of format.

APPENDIX C (Cont'd)

Long Control Instruction Opcode Specification

| Format | Opcode | Instruction |
|---|---|---|
| Format 1 | 000 | Cond p = (CRn == CRm) |
| | 001 | Cond p = (CRn ! = CRm) |
| | 010 | Cond p = (CRn < CRm) |
| | 011 | Cond p = (CRn >= CRm) |
| Format 2 | 100 | CRn = CRn + signed_integer |
| | 101 | CRn = signed_integer |
| Format 3 | 1100000 | CRn = Regf |
| | 1100001 | CRn = CRp |
| Format 4 | 110001 | Cond n = Flag q |
| | 110011 | Set Cond q |
| | 110101 | Reset Cond q |
| Format | 110111 | Case (Cond Mask) |

-continued

Long Control Instruction Opcode Specification

| Format | Opcode | Instruction |
|---|---|---|
| Format 6 | 111000 | Branch Relative (if Flag q) (PC + CRn) |
| | 111001 | Branch Relative (if not Flag q) (PC + CRn) |
| | 111010 | Branch Absolute (if Flag q) (CRn) |
| | 111011 | Branch Absolute (if not Flag q) (CRn) |
| | 111100 | Call (if Flag q) (CRn) |
| | 111101 | Call (if not Flag q) (CRn) |
| | 111110 | Halt |
| | 111111 | Nop |

In the currently preferred embodiment, the instructions of format **1** and format **4** involve the condition bits, where the names of the condition bits are Cond**0**, Cond**1**, Cond**2** and Cond**3**, but the corresponding values of the fields p, n and q are 1, 2, 3, and 4.

Cond p=(CRn==CRm)

Condition bit p is set to 1 if CRn is equal to CRm. If CRn is different from CRm, condition bit p is reset to 0. In the currently preferred embodiment, register specifier m, n are numbers from the set [0 . . . 15] and condition bit p is from the set [0 . . . 3].

APPENDIX C (Cont'd)

Cond p=(CRn!=CRm)

Condition bit p is set to 1 if CRn is not equal to CRm. If CRn is equal to CRm, condition bit p is reset to 0. In the currently preferred embodiment, register specifier m, n are numbers from the set [0 . . . 15] and condition bit p is a number from the set [0 . . . 3].

Cond p=(CRn<CRm)

Condition bit p is set to 1 if CRn is less than CRm. If CRn is equal to or greater than CRm, condition bit p is reset to 0. In the currently preferred embodiment, register specifier m, n is a number from the set [0 . . . 15] and condition bit p is in the set [0 . . . 3].

Cond p=(CRn>=CRm)

Condition bit p is set to 1 if CRn is equal to or greater than CRm. If CRn is less than CRm, condition bit p is reset to 0. In the currently preferred embodiment, register specifier m, n are each a number from the set [0 . . . 15] and condition bit p is in the set [0 . . . 3].

CRn=CRn+signed integer

The 8 bit integer field is signed extended and added to the content of CRn. The result is written in the control register CRn. Flags NC and ZC are affected. In the currently preferred embodiment, register specifier n is a number from the set [0 . . . 15].

CRn=signed integer

The 8 bit integer field is signed extended and written into the control register CRn. No flags are affected. In the currently preferred embodiment, register specifier n is a number from the set [0 . . . 15].

CRn=Regf

The control register CRn is written with the content of the general purpose register Regf. The general purpose Regf is specified in the ALU**1** instruction. Flags NC and ZC are affected. In the currently preferred embodiment, specifier Regf is a number in the set [0 . . . 15], and the register specifier n is a number from the set [0 . . . 15].

CRn=CRp

APPENDIX C (Cont'd)

The control register CRn is written with the content of the control register CRp. No flags are affected. In the currently preferred embodiment, register specifier p and n are from the set [0 . . . 15].

Cond n=Flag q

Condition bit n is set to 1 if flag q is equal to 1, condition bit n is reset to 0 if flag q is equal to 0. In the currently preferred embodiment, condition bit specifier n is in the set [0 . . . 3] and flag specifier q is in the set [0 . . . 26]

Set Cond q

Condition bit q is set to 1. In the currently preferred embodiment, condition bit specifier q is a number from the set [0 . . . 3].

Reset Cond q

Condition bit q is reset to 0. In the currently preferred embodiment, condition bit specifier q is a number from the set [0 . . . 3].

Case (Cond Mask)

The four condition bits are ANDed with the mask Cond Mask to give a 4-bit index I. The program counter is loaded with the content of the control register CR**1**. Index I= Cond[3 . . . 0] & Cond Mask. PC=CR**1**.

RELATIVE BRANCHES are relative to the branch instruction itself. In the following description, PC is the address of the branch instruction.

Branch Relative (if flag q) (PC+CRn)

If Flag q is set to 1, the content of control register CRn is added to the program counter PC. If the Flag q is not set to 1, the program counter is incremented normally. In the currently preferred embodiment, flag specifier q is in the set [0 . . . 26] and the register specifier n is in the set [0 . . . 15].

Below is a table showing the list of flags available for branch instructions, and the currently preferred embodiment of their corresponding coding in the field Flag q. Note that in the currently preferred embodiment, the coding **00000** in the flag q field means that no

APPENDIX C (Cont'd)

flag is tested, and the branch instruction is unconditional. This is true for all flavor of branch and call instructions in the currently preferred embodiment. Note that flags and condition bits are different. In the currently preferred embodiment, condition bits are a sub-set of all available flags.

Flags

| Coding | Mnemonic | Name |
|---|---|---|
| 00000 | True | True Flag (Unconditional) |
| 00001 | Cond0 | Condition Bit 0 |
| 00010 | Cond1 | Condition Bit 1 |
| 00011 | Cond2 | Condition Bit 2 |
| 00100 | Cond3 | Condition Bit 3 |
| 00101 | NC | Negative in Control Pipe |
| 00110 | ZC | Zero in Control Pipe |
| 00111 | ZP1 | Zero in Pointer 1 |
| 01000 | CP1 | Carry in Pointer 1 |
| 01001 | ZP2 | Zero in Pointer 2 |
| 01010 | CP2 | Carry in Pointer 2 |
| 01011 | MC0 | Done Signal Memory Channel 0 |
| 01100 | MC1 | Done Signal Memory Channel 1 |
| 01101 | Timer 1 | Done Signal Timer 1 |

-continued

| Coding | Mnemonic | Flags Name |
|---|---|---|
| 01110 | Timer 2 | Done Signal Timer 2 |
| 01111 | Reserved | |
| 10000 | N1 | Negative in ALU1 |

APPENDIX C (Cont'd)

| | | |
|---|---|---|
| 10001 | Z1 | Zero in ALU1 |
| 10010 | CIN1 | Carry in ALU1 |
| 10011 | O1 | Overflow in ALU1 |
| 10100 | MM1 | Min Max in ALU 1 |
| 10101 | N2 | Negative in ALU2 |
| 10110 | Z2 | Zero in ALU 2 |
| 10111 | CIN2 | Carry in ALU2 |
| 11000 | O2 | Overflow in ALU2 |
| 11001 | MM2 | Min Max in ALU2 |
| 11010–11111 | | Reserved |

Branch Relative (if not Flag q)(PC+CRn)

If Flag q is reset to 0, the content of control register CRn is added to the program counter PC. In the currently preferred embodiment, the flag specifier q is in the set of [0 . . . 26]. In the currently preferred embodiment, condition bit specifier n is in the set [0 . . . 15].

Branch Absolute (if Flag q) (CRn)

If Flag q is set to 1, the program counter PC is loaded with the content of control register CRn. If Flag q is 0, the program counter is incremented normally. In the currently preferred embodiment, the flag specifier q is in the set [0 . . . 26], and the register specifier is n is in the set [0 . . . 15].

Branch Absolute (if not Flag q) (CRn)

If Flag q is reset to 0, the program counter PC is loaded with the content of control register CRn. If Flag q is 1, the program counter is incremented normally. In the currently preferred embodiment, the flag specifier q is in the set [0 . . . 26], and the register specifier n is in the set [0 . . . 15].

APPENDIX C (Cont'd)

Call (if Flag q) (CRn)

If Flag q is set to 1, the program counter PC is loaded with the content of control register CRn, and the address to return to after completion of the sub-routing is stored in **CR0**. If Flag q is 0, the program counter is incremented normally, and **CR0** is not modified. In the currently preferred embodiment, the flag specifier q is in the set [0 . . . 26] and the register specifier n is in the set [0 . . . 15]. In the currently preferred embodiment, an unconditional branch to **CR0** is equivalent to a return, and can be used at the end of a sub-routine.

Call (if Flag not q) (CRn)

If Flag q is reset to 0, the program counter PC is loaded with the content of control register CRn, and the address to return to after completion of the sub-routine is stored in **CR0**. If Flag q is 1, the program counter is incremented normally, and **CR0** is not modified. In the currently preferred embodiment, flag specifier q is in the set [0 . . . 26] and the register specifier n is in the set [0 . . . 15].

Note that the address to return to after completion of a subroutine is the address of the third instruction after the call. The two instructions following the call are executed in delay mode before the call completes.

Halt

The halt instruction stops execution of the program running in the execution unit of the present invention. In the currently preferred embodiment, the halt instruction is issued only when all register scoreboards are cleared, i.e. when all pending data loads from external memory have returned. In the currently preferred embodiment, the halt instruction cannot be grouped with any other instruction and must be by itself in a long instruction.

What is claimed is:

**1**. An apparatus for performing pattern recognition procedures regarding an unknown pattern, said apparatus for interfacing to a computer system having a computer system bus, said apparatus comprising:

programmable multiprocessing means for executing pattern recognition instructions, each pattern recognition instruction comprising arithmetic, pointer and control operations which are executed in parallel, wherein said programmable multiprocessing means further comprises:

(i) two arithmetic pipelines for executing two arithmetic instructions in parallel, a first arithmetic pipeline optimized for performing distance computations between segments of said unknown pattern and segments of reference patterns and a second arithmetic pipeline optimized for performing best path computations in response to previously computed distance computations;

(ii) two pointer pipelines for executing two pointer instructions in parallel, a first pointer pipeline for supplying pointer information for said first arithmetic pipeline and a second pointer pipeline for supplying pointer information for said second arithmetic pipeline; and

(iii) a control pipeline for providing instruction flow control for said pattern recognition procedures;

internal memory means for providing storage for temporary results of said pattern recognition instructions and for providing temporary storage for said unknown pattern and selected reference patterns; and

external memory means for providing storage for a library of said reference patterns, said external memory means communicatively coupled to said internal memory means via a private and dedicated communication bus separate from said computer system bus.

**2**. An apparatus for performing pattern recognition procedures regarding an unknown pattern as described in claim **1** wherein said internal memory means comprises:

first data storage means coupled to said first arithmetic pipeline and coupled to said first pointer pipeline for containing said unknown pattern and for containing at least one reference pattern of said external memory means;

second data storage means coupled to said second arithmetic pipeline and coupled to said second pointer pipeline for containing distance and best path results generated from said first and said second arithmetic pipelines; and

program storage means for containing instructions executed by said programmable multiprocessing means.

**3**. An apparatus for performing pattern recognition procedures regarding an unknown pattern as described in claim **1** wherein said programmable multiprocessing means com-

prises means for interfacing with and communicating with said computer system.

4. An apparatus for performing pattern recognition procedures regarding an unknown pattern as described in claim 1 wherein said internal memory means contains a plurality of reference patterns that describe alphanumeric and punctuation symbols.

5. An apparatus for performing pattern recognition procedures regarding an unknown pattern as described in claim 4 wherein said pattern recognition procedures perform handwriting recognition and wherein said multiprocessing means is specially optimized for performing Dynamic Time Warping pattern recognition applications.

6. An apparatus for performing pattern recognition procedures regarding an unknown pattern as described in claim 4 wherein said pattern recognition procedures perform handwriting recognition and wherein said multiprocessing means is specially optimized for performing Hidden Markov Models pattern recognition applications.

7. An apparatus for performing pattern recognition procedures regarding an unknown pattern as described in claim 1 wherein

said two arithmetic pipelines, said two pointer pipelines and said control pipeline operate in parallel to execute Very Long Instruction Words within said pattern recognition procedures wherein said Very Long Instruction Words individually comprise said two arithmetic instructions and said two pointer instructions.

8. An apparatus for performing pattern recognition procedures regarding an unknown pattern as described in claim 7 wherein said arithmetic pipelines of said multiprocessing means are specially optimized to perform Dynamic Time Warping or Hidden Markov Models pattern recognition computations.

9. An apparatus for performing pattern recognition procedures regarding an unknown pattern as described in claim 7 wherein said pattern recognition procedures are handwriting recognition procedures, and wherein said computer system is a pen-based computer system.

10. A system for pattern recognition comprising:

general purpose host computer system means comprising: a host bus means for providing communication within said general purpose host computer system means; central processor means for executing host instructions, said central processor means coupled to said host bus means; and host memory means for storing host information, said host memory means coupled to said host bus means; and

programmable multiprocessing means for executing pattern recognition instructions for comparing an unknown pattern against a plurality of reference patterns; said programmable multiprocessing means coupled to said host bus means, wherein said programmable multiprocessing means further comprises:

(i) two arithmetic pipelines for executing two arithmetic instructions in parallel, a first arithmetic pipeline optimized for performing distance computations between segments of said unknown pattern and segments of said plurality of reference patterns and a second arithmetic pipeline optimized for performing best path computations in response to previously computed distance computations;

(ii) two pointer pipelines for executing two pointer instructions in parallel, each of said pointer pipelines for supplying pointer information for an associated arithmetic pipeline: and

(iii) a control pipeline for providing instruction flow control for said pattern recognition instructions, and wherein said two arithmetic pipelines, said two pointer pipelines and said control pipeline operate in parallel to execute Very Long Instruction Words within said pattern recognition instructions: and

private memory means coupled to said programmable multiprocessing means for storing a library of said plurality of reference patterns, said private memory means having at least one communication pathway to said programmable multiprocessing means that bypasses said host bus means wherein access of said private memory means by said programmable multiprocessing means does not necessarily increase information flow across said host bus means.

11. A system for pattern recognition as described in claim 10 further comprising:

stylus input means for interfacing with a user and for providing a communication signal representative of movement of a user hand; and

digitizer means for providing a digital signal representative of said communication signal, said digitizer means coupled to said host bus means and also coupled to said stylus input means to receive said communication signal.

12. A system for pattern recognition as described in claim 11 wherein said digitizer means supplies said unknown pattern representative of an unknown handwritten character for pattern recognition.

13. A system for pattern recognition as described in claim 10 wherein said central processor means of said host computer system means executes high level pattern recognition instructions that synchronize transfer of unknown patterns to said programmable multiprocessing means and that access results of said programmable multiprocessing means; and

wherein said programmable multiprocessing means executes lower level pattern recognition instructions that compare said unknown pattern against a individual reference pattern of said plurality of reference patterns, said central processor means and said programmable multiprocessor means communicate over said host bus means to synchronize said high level and said lower level instructions.

14. A system for pattern recognition as described in claim 13 wherein said programmable multiprocessing means compares said unknown pattern against each of said reference patterns within said private memory means and reports matching information to said central processor means and wherein said central processor means determines, based on said matching information, reference patterns mostly closely matched to said unknown pattern.

15. A system for pattern recognition as described in claim 10 wherein said programmable multiprocessing means further comprises:

first internal buffer means for containing said unknown pattern and for containing at least one selected reference pattern of said plurality of reference patterns;

second internal buffer means for containing results generated from said programmable multiprocessing means including results of said distance and best path computations; and

program storage means for containing instructions executed by said programmable multiprocessing means.

16. A system for pattern recognition as described in claim 15 wherein said programmable multiprocessing means is optimized for Dynamic Time Warping or Hidden Markov

Models pattern recognition procedures.

17. A system for pattern recognition as described in claim 10 wherein said programmable multiprocessing means is optimized for Dynamic Time Warping or Hidden Markov Models pattern recognition procedures.

18. In a computer system having a central processor for executing instructions, a host memory array for storing information, and a communication bus coupled to said central processor and to said host memory array, a pattern recognition apparatus coupled to said communication bus for determining an unknown pattern information, said pattern recognition apparatus comprising:

a programmable multiprocessor specially optimized for executing pattern recognition instructions, said programmable multiprocessor communicatively coupled with said central processor wherein said programmable multiprocessor further comprises:

(i) a first arithmetic pipeline for performing arithmetic instructions on individual points of said unknown pattern information against individual points of a selected reference pattern: and

(ii) a first pointer pipeline for executing pointer instructions to reference said individual points of said unknown pattern information and of said selected reference pattern, wherein said first pointer pipeline and said first arithmetic pipeline execute in parallel;

(iii) a second arithmetic pipeline for performing arithmetic instructions on results from said first arithmetic pipeline: and

(iv) a second pointer pipeline for executing pointer instructions to reference results from said first arithmetic pipeline, wherein said second pointer pipeline said second arithmetic pipeline, and said first arithmetic pipeline execute in parallel; and

a private memory array, separate from said host memory array, for storing reference patterns, said private memory array communicatively coupled to said programmable multiprocessor by at least one communication channel that bypasses said communication bus wherein communication between said private memory array and said programmable multiprocessor does not interfere with said control processor.

19. A pattern recognition apparatus as described in claim 18 wherein said pattern recognition instructions executed by said programmable multiprocessor are Very Long Instruction Words wherein said Very Long Instruction Words individually comprise two arithmetic instructions for execution by said first and second arithmetic pipelines and two pointer instructions for execution by said first and second pointer pipelines.

20. A pattern recognition apparatus as described in claim 18 wherein said programmable multiprocessor is specially optimized to perform handwriting recognition procedures using Dynamic Time Warping procedures.

21. A pattern recognition apparatus as described in claim 18 wherein said programmable multiprocessor is specially optimized to perform handwriting recognition procedures using Hidden Markov Models procedures.

22. A pattern recognition apparatus as described in claim 18 wherein said programmable multiprocessor is specially optimized to perform voice recognition procedures.

23. A pattern recognition apparatus as described in claim 18 wherein said programmable multiprocessor further comprises internal buffers for temporary storage of said unknown pattern information and for temporary storage of pattern recognition results between said unknown pattern information and said reference patterns.

24. A pattern recognition apparatus as described in claim 18 wherein said programmable multiprocessor is specially optimized to perform handwriting recognition procedures and further comprising:

handwriting stylus means for interfacing with a user to supply information regarding movement of a user hand; and

digitizer means coupled to said handwriting stylus for translating said information regarding movement of said user hand into digital form as an unknown pattern.

25. A pattern recognition apparatus as described in claim 18 wherein said programmable multiprocessor further comprises a first internal buffer for temporary storage of said unknown pattern information and said selected reference pattern, said first internal buffer referenced by pointers from said first pointer pipeline and wherein said programmable multiprocessor further comprises a second internal buffer for temporary storage of results from said first and said second arithmetic pipelines, said second internal buffer referenced by pointers from said second pointer pipeline.

26. A pattern recognition apparatus as described in claim 18 wherein said programmable multiprocessor performs handwriting pattern recognition and wherein said first arithmetic pipeline executes distance computations and wherein said second arithmetic pipeline executes best path computations.

27. In a computer system having a central processor for executing instructions, a host memory array for storing information, and a communication bus coupled to said central processor and to said host memory array, a pattern recognition apparatus for determining an unknown pattern, said pattern recognition apparatus coupled to said communication bus, said pattern recognition apparatus comprising:

a programmable multiprocessor specially optimized for executing pattern recognition instructions, said programmable multiprocessor comprising:

a first and a second arithmetic pipeline for executing two arithmetic instructions in parallel, said first arithmetic pipeline optimized for performing distance computations between segments of said unknown pattern and segments of a reference pattern of a plurality of reference patterns and said second arithmetic pipeline optimized for performing best path computations in response to previously computed distance computations;

a first and a second pointer pipeline for executing two pointer instructions in parallel, said first pointer pipeline supplying reference pointers to said first arithmetic pipeline and said second pointer pipeline supplying reference pointers to said second arithmetic pipeline;

a control pipeline for controlling instruction flow of said arithmetic and pointer instructions by executing a control instruction in parallel with said two arithmetic and pointer instructions; and

a private memory array, separate from said host memory array, for storing said plurality of reference patterns, said private memory array communicatively coupled to said programmable multiprocessor by at least one communication channel that bypasses said communication bus.

28. A pattern recognition apparatus as described in claim 27 and wherein said first and said second arithmetic pipelines, said first and said second pointer pipelines and said control pipeline operate in parallel to execute a Very Long Instruction Word comprising two arithmetic instructions and two pointer instructions.

29. A pattern recognition apparatus as described in claim 27 wherein said programmable multiprocessor is specially optimized for handwriting pattern recognition using Dynamic Time Warping procedures.

30. A pattern recognition apparatus as described in claim 27 wherein said programmable multiprocessor is specially optimized for handwriting pattern recognition using Hidden Markov Models procedures.

31. In a computer system having a central processor for executing instructions, a host memory array for storing information, and a communication bus coupled to said central processor and to said host memory array, an apparatus for performing pattern recognition instructions to reduce processing required of said central processor, said pattern recognition apparatus for determining an unknown pattern, said pattern recognition apparatus coupled to said communication bus, said pattern recognition apparatus comprising:

a) a programmable multiprocessor specially optimized for handwriting recognition and for executing pattern recognition instructions, said programmable multiprocessor comprising:

a first and a second arithmetic pipeline for executing two arithmetic instructions in parallel, said first arithmetic pipeline optimized for performing distance computations between segments of said unknown pattern and segments of a selected reference pattern and said second arithmetic pipeline optimized for performing best path computations in response to previously computed distance computations;

a first and a second pointer pipeline for executing two pointer instructions in parallel, said first pointer pipeline for supplying reference pointers to said first arithmetic pipeline and said second pointer pipeline for supplying reference pointers to said second arithmetic pipeline;

a control pipeline for controlling instruction flow of said arithmetic and pointer instructions by executing a control instruction in parallel with said two arithmetic and pointer instructions;

an internal buffer memory for storing said unknown pattern and said selected reference pattern; and

b) a private memory array, separate from said host memory array, for storing reference patterns, said private memory array communicatively coupled to said programmable multiprocessor by at least one communication channel that bypasses said communication bus.

32. A pattern recognition apparatus as described in claim 31 wherein said programmable multiprocessor further comprises memory to memory transfer means for transferring said selected reference pattern from said private memory array to said internal buffer memory over said communication channel that bypasses said communication bus.

33. A pattern recognition apparatus as described in claim 31 wherein said computer system is a pen-based computer system and wherein said computer system further includes a stylus for translating movement of a user hand and a digitizer coupled to said stylus for providing an unknown pattern to said programmable multiprocessor, said digitizer coupled to said communication bus.

34. A system for performing pattern recognition comprising:

host processor means for executing high level pattern recognition instructions and system tasks apart from said pattern recognition instructions;

communication bus means coupled to said host processor means, said communication bus means for supplying a communication pathway for said host processor means to perform said system tasks;

multiprocessor means specially optimized for performing lower level pattern recognition instructions between an unknown pattern and selected reference patterns, said multiprocessor means coupled to said communication bus means to receive instructions from said host processor means, wherein said multiprocessor means further comprises;

(i) a first arithmetic pipeline for performing arithmetic instructions on individual points of said unknown pattern against individual points of a selected reference pattern; and

(ii) a first pointer pipeline for executing pointer instructions to reference said individual points of said unknown pattern and of said selected reference pattern, wherein said first pointer pipeline and said first arithmetic pipeline execute in parallel:

(iii) a second arithmetic pipeline for performing arithmetic instructions on results from said first arithmetic pipeline: and

(iv) a second pointer pipeline for executing pointer instructions to reference said results from said first arithmetic pipeline, wherein said second pointer pipeline, said second arithmetic pipeline, and said first arithmetic pipeline execute in parallel; and

private memory means for storing a plurality of reference patterns, said private memory means coupled to said multiprocessor means by a communication pathway that bypasses said communication bus means wherein accessing of said selected reference patterns of said private memory means by said multiprocessor means does not increase information bandwidth over said communication bus means.

35. A system for performing pattern recognition as described in claim 34 wherein said multiprocessor means is specially optimized to perform handwriting recognition by Dynamic Time Warping or Hidden Markov Models procedures wherein said first arithmetic pipeline performs distance computations between said individual points of said unknown pattern against said individual points of said selected reference pattern and said second arithmetic pipeline performs best path computations on said results from said first arithmetic pipeline.

36. A system for performing pattern recognition as described in claim 35 further comprising:

handwriting stylus means for interfacing with a user to supply information regarding movement of a user hand; and

digitizer means coupled to said handwriting stylus for translating said information regarding movement of said user hand into digital form, said digitizer also for supplying an unknown pattern, said digitizer coupled to said communication bus means.

37. A system for performing pattern recognition as described in claim 35 wherein said high level pattern recognition instructions executed by said host processor means synchronize transferring of said unknown reference pattern into said multiprocessor means and also synchronize reporting of results of said multiprocessor means to said host processor means.

38. A user interactive system for pattern recognition comprising:

a pen-based host computer system comprising: a host bus

for providing communication within said pen-based host computer system; central processor for executing high level pattern recognition instructions, said central processor coupled to said host bus; an input stylus and digitizer responsive to movement of a user hand for receiving an unknown handwriting pattern, said input stylus and digitizer coupled to said host bus; and a host memory array for storing host information, said host memory array coupled to said host bus; and

a programmable multiprocessor specially optimized for Dynamic Time Warping or Hidden Markov Models procedures for executing low level pattern recognition instructions to compare said unknown handwriting pattern against a plurality of reference handwriting patterns; said programmable multiprocessor coupled to said host bus, wherein said programmable multiprocessor further comprises;

(i) a first arithmetic pipeline for performing arithmetic instructions on individual points of said unknown handwriting pattern information against individual points of a selected reference handwriting pattern to determine distance computations; and

(ii) a first pointer pipeline for executing pointer instructions to reference said individual points of said unknown handwriting pattern information and of said selected reference handwriting pattern, wherein said first pointer pipeline and said first arithmetic pipeline execute in parallel;

(iii) a second arithmetic pipeline for performing arithmetic instructions on results from said first arithmetic pipeline to determine best path computations; and

(iv) a second pointer pipeline for executing pointer instructions to reference said results from said first arithmetic pipeline, wherein said second pointer pipeline, said second arithmetic pipeline, and said first arithmetic pipeline execute in parallel; and

a private memory array coupled to said programmable multiprocessor for storing a library of said plurality of reference handwriting patterns, said private memory array having at least one communication pathway to said programmable multiprocessor that bypasses said host bus so that access of said private memory by said programmable multiprocessor does not necessarily increase information flow across said host bus.

**39**. A system for pattern recognition as described in claim **38** wherein said central processor controls transferring said unknown handwriting pattern to said programmable multiprocessor via said host bus and wherein said programmable multiprocessor controls transfer of selected reference handwriting patterns from said private memory to said programmable multiprocessor.

**40**. A computer implemented method of performing pattern recognition on an unknown pattern, said method comprising the computer implemented steps of:

a) executing high level pattern recognition instructions by a host processor;

b) executing lower level pattern recognition instructions by a programmable multiprocessor to compare said unknown pattern against selected reference patterns, said step of executing lower level pattern recognition instructions further comprising the steps of:

executing arithmetic instructions by a pair of arithmetic pipelines, said step of executing arithmetic instructions comprising the steps of performing arithmetic instructions on individual points of said unknown pattern against individual points of a selected reference pattern via a first arithmetic pipeline to perform distance computations and simultaneously performing arithmetic instructions on previous results from said first arithmetic pipeline via a second arithmetic pipeline to perform distance computations; and

executing pointer instructions by a pointer pipeline in parallel with said step of executing arithmetic instructions; and

c) communicating between said host processor and said programmable multiprocessor via a host computer bus; and

d) transferring said selected reference patterns from a private memory array to said programmable multiprocessor, said step of transferring bypassing said host computer bus.

**41**. A method of performing pattern recognition as described in claim **40** further comprising the computer implemented steps of:

transferring results of said programmable multiprocessor over said host computer bus to said host processor; and

identifying said unknown pattern based on said results of said programmable multiprocessor, said step of identifying performed by said host processor.

**42**. A method of performing pattern recognition as described in claim **41** wherein said method of pattern recognition is used for handwriting recognition and wherein said unknown pattern is representative of a handwritten character.

**43**. A method of performing pattern recognition as described in claim **40** wherein said high level pattern recognition instructions synchronize transfers of said unknown pattern to said programmable multiprocessor and also synchronize transfers of said results of said programmable multiprocessor to said host processor.

**44**. A method of performing pattern recognition as described in claim **43** wherein said lower level pattern recognition instructions perform point by point comparisons between said unknown pattern and said selected reference patterns to generate said results of said programmable multiprocessor.

**45**. In a computer system having a central processor means for executing computer system instructions, an input means for receiving an unknown pattern, a system memory array for storage of system information and a computer system bus for coupling said central processor means, said input means and said system memory array, a method of increasing accuracy and performance of pattern recognition applications comprising the computer implemented steps of:

performing high level pattern recognition procedures via said central processor means;

performing lower level pattern recognition procedures via a programmable multiprocessor means to reduce processing required of said central processor means, said step of executing lower level pattern recognition procedures further comprising the steps of:

(i) transferring a selected reference pattern from a private memory array to said programmable multiprocessor means;

(ii) comparing said selected reference pattern, point by point against said unknown pattern, said step of comparing comprising the steps of executing arithmetic instructions by a pair of arithmetic pipelines, said step of executing arithmetic instructions comprising the steps of performing arithmetic instructions on individual points of said unknown pattern information against individual points of a selected

reference pattern via a first arithmetic pipeline to perform distance computations and simultaneously performing arithmetic instructions on previous results from said first arithmetic pipeline via a second arithmetic pipeline to perform best path computations and executing pointer instructions by a pointer pipeline in parallel with said step of executing arithmetic instructions; and

(iii) generating results of said comparing step indicating degrees of coincidence between said selected reference pattern and said unknown pattern;

communicating between said central processor means and said programmable multiprocessor means via said computer system bus;

storing said reference patterns in said private memory array; and

communicating between said private memory array and said programmable multiprocessor over a communication channel separate from said computer system bus to reduce bandwidth requirements of said computer system bus.

**46**. A method of increasing accuracy and performance of pattern recognition applications as described in claim **43** wherein said step of performing high level pattern recognition procedures comprises the steps of:

receiving said unknown pattern via said input means;

transferring said unknown pattern to said programmable multiprocessing means;

transferring results of said programmable multiprocessing means to said central processor means; and

determining identity of said unknown pattern based on said results from said programmable multiprocessing means.

**47**. A method of increasing accuracy and performance of pattern recognition applications as described in claim **46** wherein said step of determining identity of said unknown pattern further comprises the step of displaying said identity to a display means.

**48**. A method of increasing accuracy and performance of pattern recognition applications as described in claim **45** wherein said pattern recognition applications are handwriting recognition applications and wherein said programmable multiprocessor means is optimized to perform Dynamic Time Warping or Hidden Markov Models procedures.

**49**. In a computer system having a central processor means for executing computer system instructions, an input means for receiving an unknown information pattern, a system memory array for storage of system information and a computer system bus for coupling said central processor means, said input means and said system memory array, a method of increasing accuracy and performance of pattern recognition applications comprising the computer implemented steps of:

a) storing reference patterns in a private memory array;

b) performing high level pattern recognition procedures via said central processor means, said high level procedures comprising the steps of;

receiving an unknown pattern via said input means;

transferring said unknown pattern to a programmable multiprocessing means via said computer system bus;

transferring results of said programmable multiprocessing means to said central processor means via said computer system bus; and

determining identity of said unknown pattern based on said results from said programmable multiprocessing means; and

c) performing lower level pattern recognition procedures via said programmable multiprocessor means to reduce processing required of said central processor means, said lower level pattern recognition procedures comprises the steps of:

transferring a selected reference pattern from said private memory array to said programmable multiprocessor means via a communication channel separate from said computer system bus to reduce bandwidth requirements of said computer system bus;

comparing said selected reference pattern, point by point, against said unknown pattern, said step of comparing comprising the steps of executing arithmetic instructions by a pair of arithmetic pipelines, said step of executing arithmetic instructions comprising the steps of performing arithmetic instructions on individual points of said unknown pattern information against individual points of a selected reference pattern via a first arithmetic pipeline to perform distance computations and simultaneously performing arithmetic instructions on previous results from said first arithmetic pipeline via a second arithmetic pipeline to perform best path computations and executing pointer instructions by a pointer pipeline in parallel with said step of executing arithmetic instructions; and

generating results of said comparing step indicating degrees of coincidence between said selected reference pattern and said unknown pattern.

**50**. A method of increasing accuracy and performance of pattern recognition applications as described in claim **49** wherein said programmable multiprocessor is specially optimized for Dynamic Time Warping or Hidden Markov Models pattern recognition and wherein said pattern recognition application is a handwriting recognition application.

* * * * *

UNITED STATES PATENT AND TRADEMARK OFFICE

# CERTIFICATE OF CORRECTION



**PATENT NO.** : 5,459,798

**DATED** : October 17, 1995

**INVENTOR(S)** : Bailey et al.

**It is certified that error appears in the above-identified patent and that said Letters Patent is hereby corrected as shown below:**

In column 37 at line 52 delete "Them" and insert --There--

In column 40 at line 40 delete "mad" and insert --read--

In column 42 at line 21 delete "dam" and insert --data--

In column 42 at line 27 delete "dam" and insert --data--

In column 44 at Table VI at line 59 delete "0" first occurrence and insert --1--

In column 45 at line 62 delete "an" and insert --art--

In column 48 at line 28 delete "identifies" and insert --identities--

In column 50 at line 30 delete "mext" and insert --next--

UNITED STATES PATENT AND TRADEMARK OFFICE

# CERTIFICATE OF CORRECTION



**PATENT NO.** : 5,459,798

**DATED** : October 17, 1995

**INVENTOR(S)** : Bailey et al.

**It is certified that error appears in the above-identified patent and that said Letters Patent is hereby corrected as shown below:**

In column 51 at line 7 insert a new line --*Pt9 = Acc2 + R1, Pt9 += 2;-- following "2;"

In column 51 at line 33 insert --Appendix A--

In column 56 at line 65 delete "Channel 1" and insert --Channel 1-- below "Done Signal Memory"

In column 57 at line 7 delete "Reserved" and insert --Reserved-- below "Done Signal Timer 2"

Signed and Sealed this

Seventeenth Day of June, 1997

*Attest:*

*Attesting Officer*

BRUCE LEHMAN

*Commissioner of Patents and Trademarks*