US007164586B2

(12) **United States Patent**
Lin

(10) **Patent No.: US 7,164,586 B2**
(45) **Date of Patent: Jan. 16, 2007**

(54) **PLASMA DISPLAY**

(75) Inventor: **Yu-Kai Lin**, Hsinchu (TW)

(73) Assignee: **AU Optronics Corp.**, Hsinchu (TW)

(*) Notice: Subject to any disclaimer, the term of this patent is extended or adjusted under 35 U.S.C. 154(b) by 169 days.

(21) Appl. No.: **10/792,231**

(22) Filed: **Mar. 3, 2004**

(65) **Prior Publication Data**

US 2005/0124221 A1 Jun. 9, 2005

(30) **Foreign Application Priority Data**

Dec. 5, 2003 (TW) ..... 92134310 A

(51) **Int. Cl.**
H05K 7/20 (2006.01)

(52) **U.S. Cl.** **361/714**; 361/707; 348/794

(58) **Field of Classification Search** 361/707, 361/687, 704, 714; 248/510, 917–924; 24/458; 348/14.07, 552, 789, 794, 836–843
See application file for complete search history.

(56) **References Cited**

U.S. PATENT DOCUMENTS

4,442,450	A *	4/1984	Lipschutz et al.	257/713
4,689,720	A *	8/1987	Daszkowski	361/704
5,268,815	A *	12/1993	Cipolla et al.	361/704
5,287,001	A *	2/1994	Buchmann et al.	257/719
5,971,566	A *	10/1999	Tani et al.	362/294
6,043,981	A *	3/2000	Markow et al.	361/704
6,049,469	A *	4/2000	Hood et al.	361/818
6,381,124	B1 *	4/2002	Whitcher et al.	361/681
6,388,189	B1 *	5/2002	Onoue	174/383
6,504,713	B1 *	1/2003	Pandolfi et al.	361/695
6,870,738	B1 *	3/2005	Goebl	361/719
2003/0020152	A1 *	1/2003	Inoue et al.	257/684
2003/0068487	A1 *	4/2003	Nguyen et al.	428/323
2005/0078446	A1 *	4/2005	Bae	361/687

FOREIGN PATENT DOCUMENTS

JP	11-233968	8/1999
JP	2000-182445	6/2000
JP	2001337612	7/2001

OTHER PUBLICATIONS

Machine translation of the detailed description and of the description of the drawings of JP/2002-006754, Japanese Patent Office (http://www4.ipdl.ncipi.go.jp/Tokujitu/PAJdetail.ipdl?N0000=60 &N0120=01&N3001=2002-006754).*
China Office Action mailed Jun. 2, 2006.

* cited by examiner

Primary Examiner—Anatoly Vortman
(74) *Attorney, Agent, or Firm*—Thomas, Kayden, Horstemeyer & Risley

(57) **ABSTRACT**

A plasma display. The plasma display comprises a first circuit board and a second circuit board disposed in a space formed by a base plate and a back cover thereof. The first circuit board is mounted on the base plate and bears a first electronic element, the second circuit board is mounted on the first circuit board and bears a second electronic element requiring heat dissipation different from the first electronic element. A thermal conductive device is disposed between the second electronic element and the back cover to dissipate heat from the second electronic element to the back cover. Thereby, the electronic elements requiring different heat dissipation are positioned in divided areas to enhance heat dissipation efficiency.

15 Claims, 7 Drawing Sheets

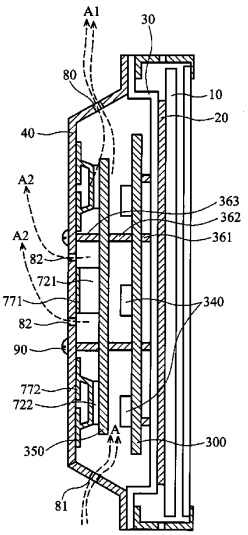

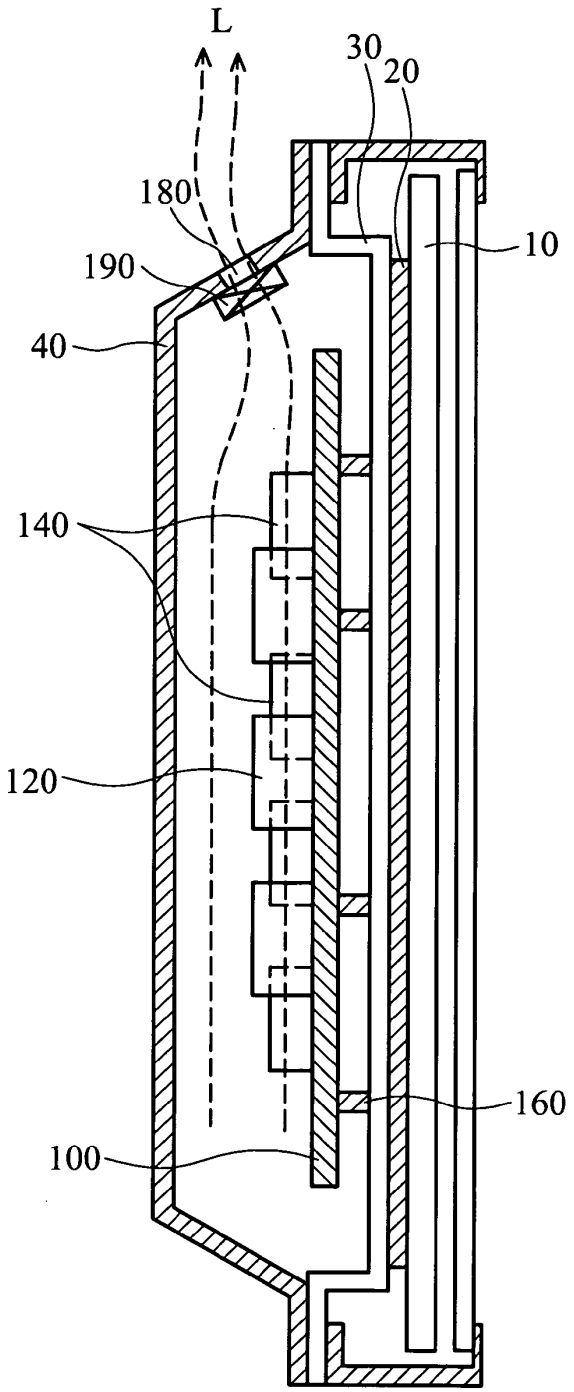

FIG. 1 (RELATED ART)

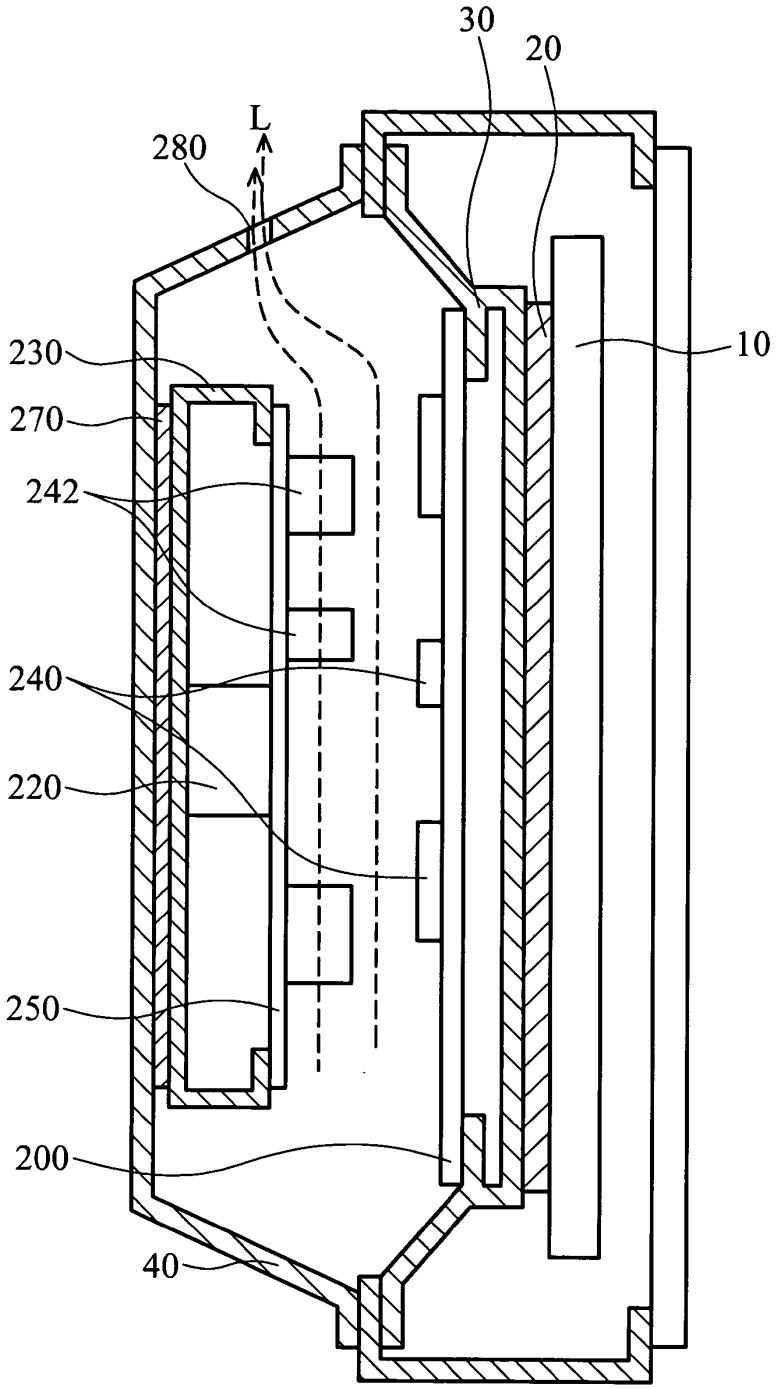

FIG. 2 (RELATED ART)

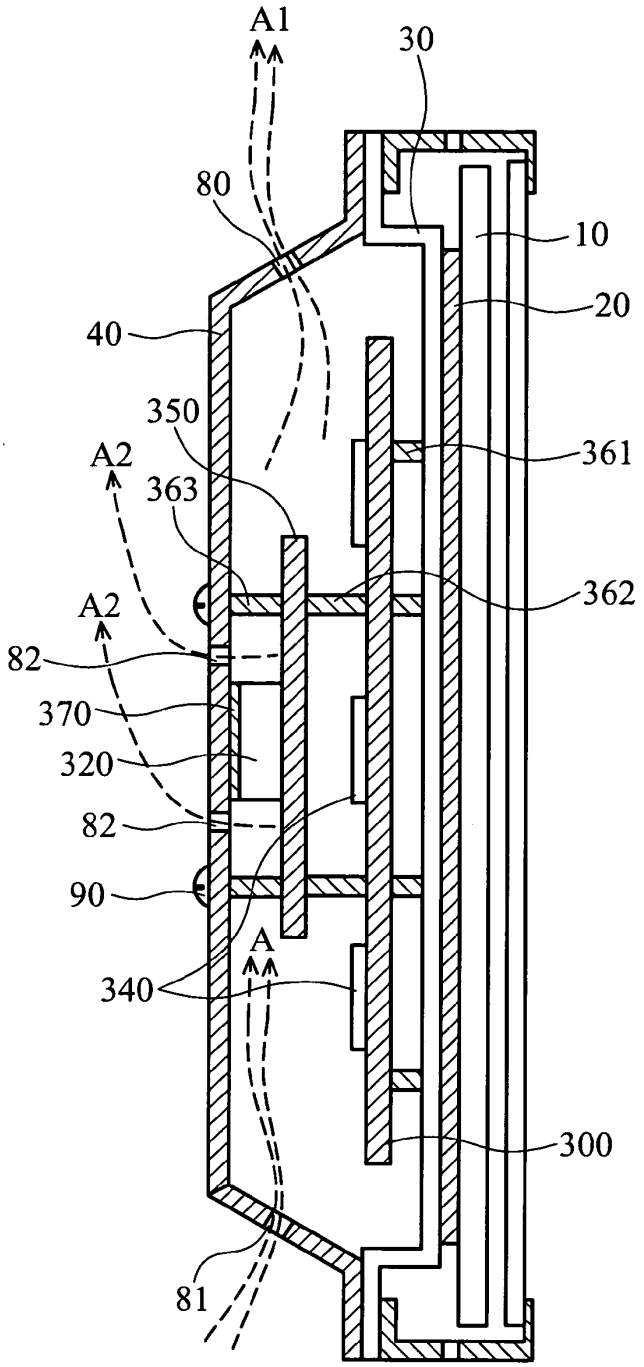

FIG. 3

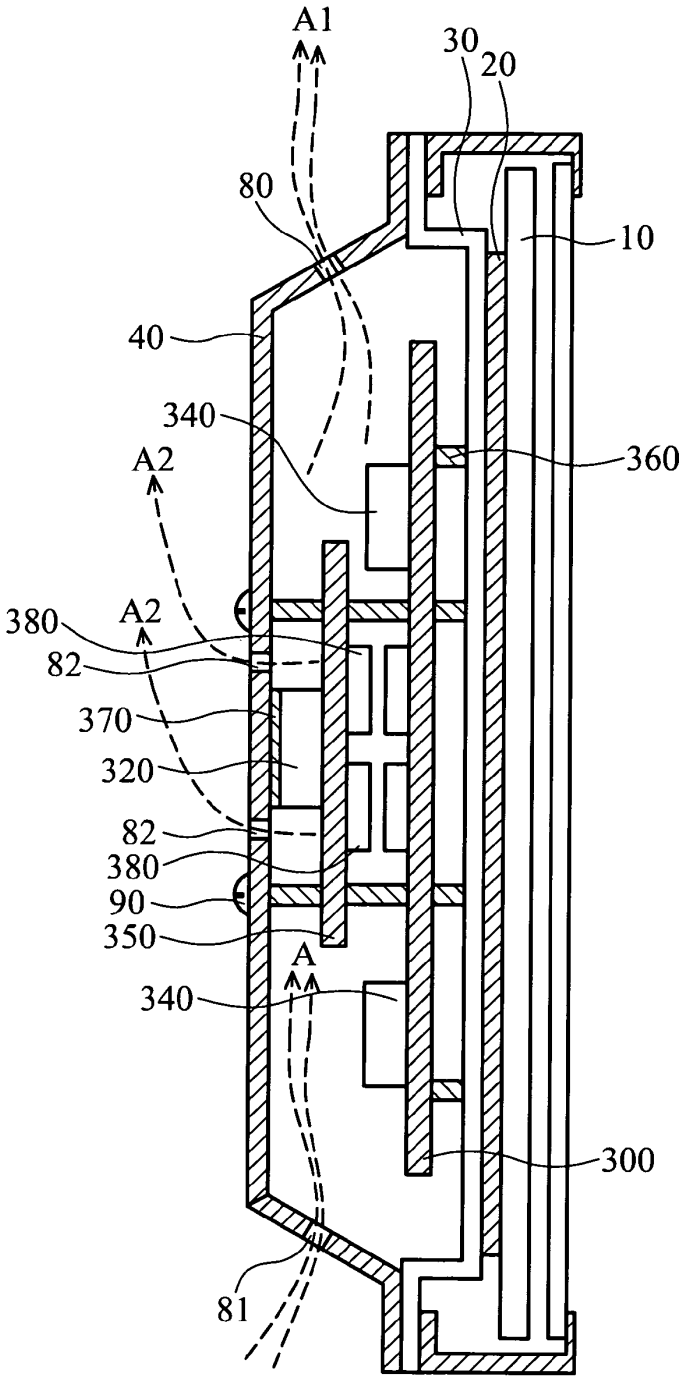
A1
30
20
80
10
40
340
360
A2
380
A2
82
370
320
82
380
90
350
A
340
300
81

FIG. 4

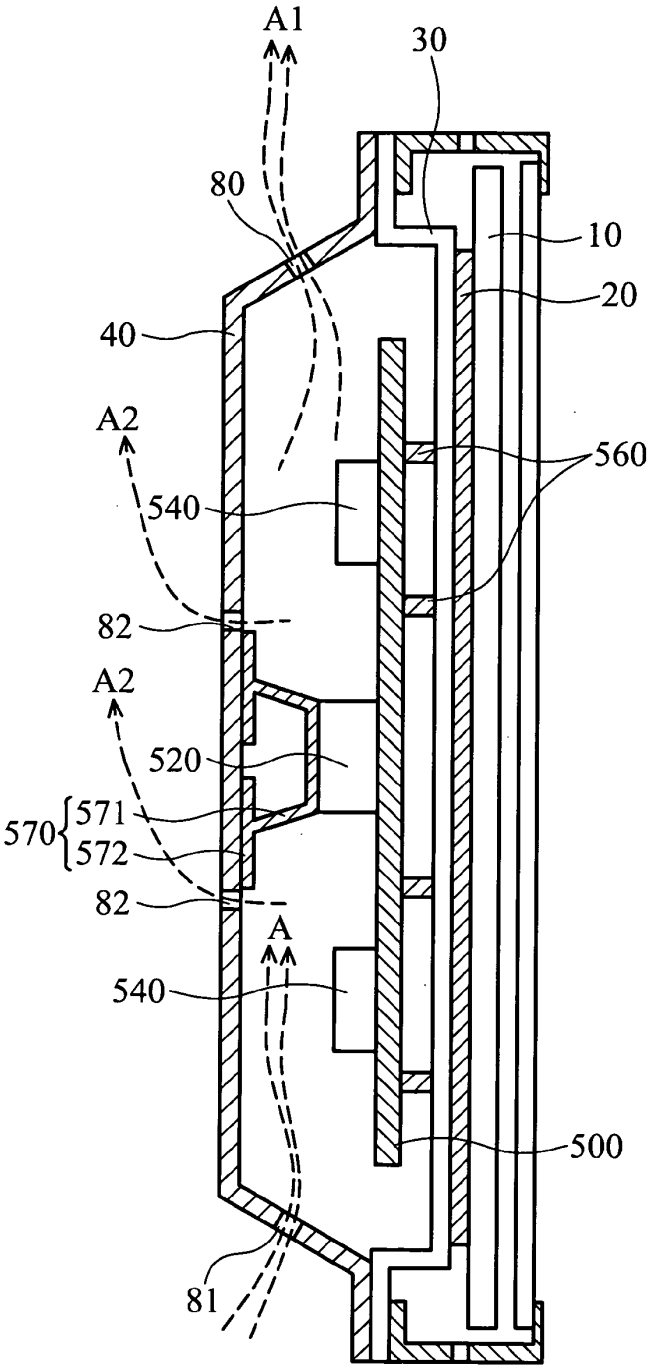

FIG. 5

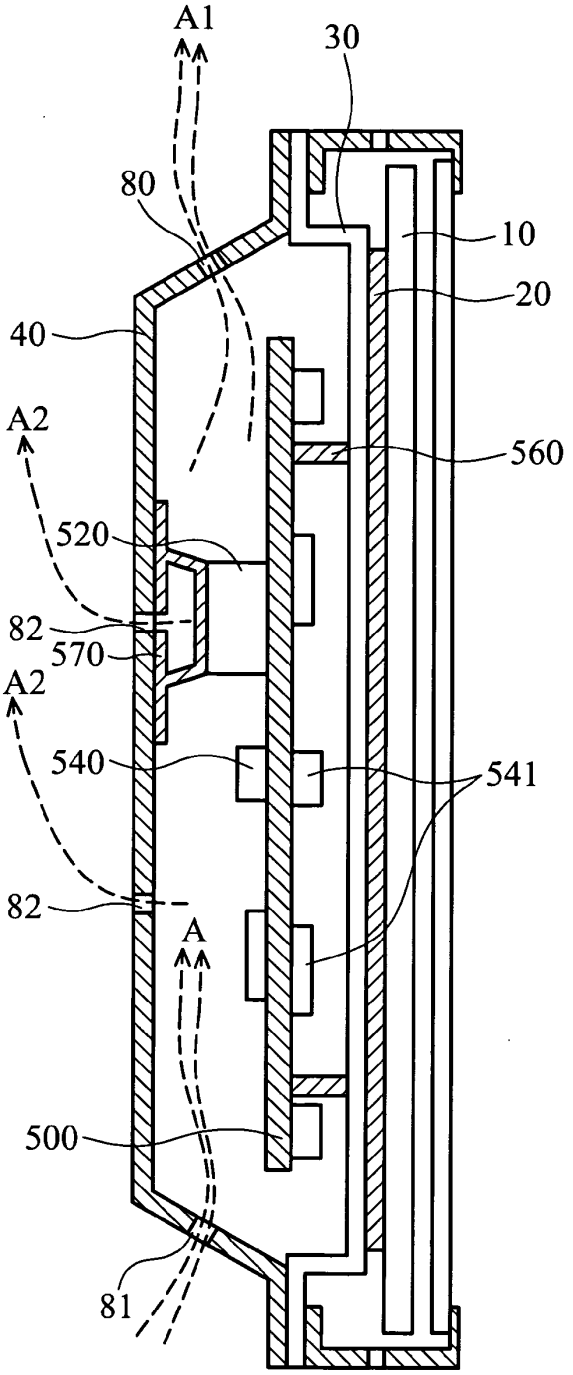

FIG. 6

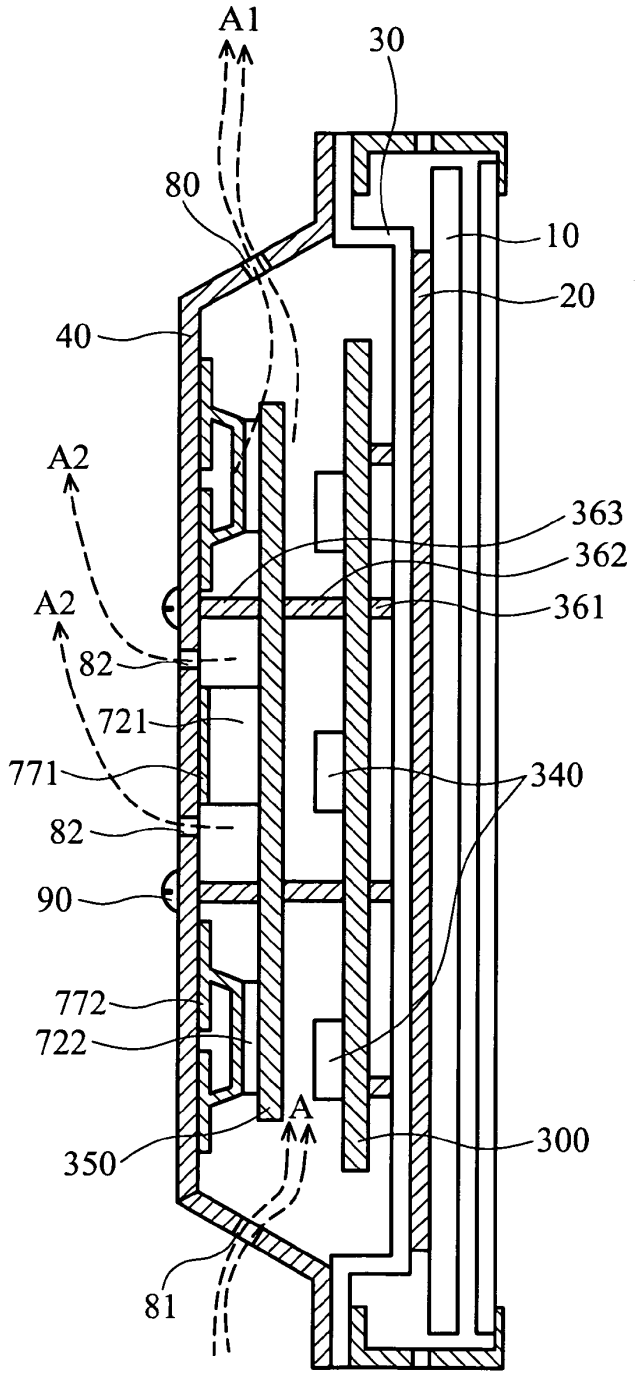
A1
30
80
10
20
40
A2
363
362
A2
361
82
721
771
340
82
90
772
722
A
350
300
81

FIG. 7

PLASMA DISPLAY

BACKGROUND OF THE INVENTION

1. Field of the Invention

The present invention relates to a plasma display, and in particular to a plasma display having divided areas for divers electronic elements requiring heat dissipation.

2. Description of the Related Art

A display panel, electronic elements and driver modules in a driver circuit are main heat sources of a plasma display. In a conventional plasma display, as shown in FIG. **1**, a display panel **10** is secured to a metal base plate **30** via a thermal pad **20**. The base plate **30** and the back cover **40** of the plasma display form a closed space accommodating a circuit board **100**. Heat produced by the display panel **10** is conducted to the metal back cover **40** via the thermal pad **20** and base plate **30** for dissipation. Heat from a driver module **120** and an electronic element **140** is evacuated by airflow L via a vent **180** and a fan **190** to the exterior. In general, the driver module **120** requires more heat dissipation than the electronic element **140**.

In this structure, as the driver module **120** and the electronic element **140** are disposed on the same circuit board **100**, the space and path for heat dissipation may not be sufficient, therefore, the plasma display may develop an unacceptable high temperature.

Accordingly, Japan patent JP2002-6754 discloses a plasma display as shown in FIG. **2**. A display panel **10** is secured to a base plate **30** via a thermal pad **20**. The base plate **30** and a back cover **40** of the plasma display form a closed space accommodating a first circuit board **200** fixed to the base plate **30** and a second circuit board **250** fixed to a frame **230** bonded to the back cover **40** via a thermal conductive element **270**. The first circuit board **200** bears an electronic element **240**, and the second circuit board **250** bears an electronic element **242** on one side and a driver module **220** on the other. The heat sink (not shown) of the driver module **220** contacts the frame **230**, such that the heat from the driver module **220** is conducted to the back cover **40** via the frame **230** and the thermal conductive element **270**.

In this condition, although the electronic element **242** and the driver module **220** are disposed on the second circuit board **250**, as the second circuit board **250** is disposed on the back cover **40**, the power cable of the second circuit board **250** is difficult to secure before the back cover **40** is mounted. Moreover, although the heat from driver module **220** is conducted by the contact between the driver module **220** and the frame **230**, the contact area is not large enough for good conduction. In addition, due to the large, thin and easily deformed back cover **40**, the frame **230** is fixed to the back cover **40** only via the thermal conductive element **270** further reducing the thermal contact area in the structure.

SUMMARY OF THE INVENTION

Accordingly, an object of the invention is to provide divided areas for electronic elements with divers heat dissipation requirements.

Another object of the invention is to provide a dedicated thermal conductive device for electronic elements requiring large heat dissipation.

The plasma display of the invention comprises a base plate, a back cover engaged with the base plate to form a space, a first circuit board disposed in the space and mounted on the base plate, a first electronic element disposed on the first circuit board and a first thermal conductive device disposed between the first electronic element and the back cover and mounted on the first electronic element.

The first thermal conductive device comprises a thermal conductive spring element of copper. The thermal conductive spring element has a spring portion secured to the first electronic element and a contact portion abutting the back cover. The spring portion can be integrally formed with the contact portion.

The plasma display further comprises a plurality of first supporters disposed between the first circuit board and the base plate to separate the first circuit board from the base plate by an appropriate distance. A second electronic element can be disposed on the first circuit board but opposite to the first electronic element.

The plasma display further comprises a second circuit board mounted between the first circuit board and the base plate, and a third electronic element disposed on the second circuit board.

The plasma display further comprises a fourth electronic element disposed on the first circuit board and a second thermal conductive device disposed between the fourth electronic element and the back cover and mounted on the fourth electronic element. In this structure, the first thermal conductive device can be a thermal pad, and the second thermal device can be a thermal conductive spring element as described above.

In the invention, electronic elements with different heat dissipation requirements are disposed in different areas and a dedicated heat dissipation device is provided for these electronic elements requiring increased heat dissipation. Thus, the overall dissipation efficiency of the plasma display is enhanced.

A detailed description is given in the following embodiments with reference to the accompanying drawings.

BRIEF DESCRIPTION OF THE DRAWINGS

The present invention can be more fully understood by reading the subsequent detailed description and examples with references made to the accompanying drawings, wherein:

FIG. **1** is a cross section of a conventional plasma display as referenced in the Related Art;

FIG. **2** is a cross section of another conventional plasma display as referenced in the Related Art;

FIG. **3** is a cross section of the first embodiment of the plasma display of the invention;

FIG. **4** is a cross section of the second embodiment of the plasma display of the invention;

FIG. **5** is a cross section of the third embodiment of the plasma display of the invention;

FIG. **6** is a cross section of the fourth embodiment of the plasma display of the invention; and

FIG. **7** is a cross section of the fifth embodiment of the plasma display of the invention.

DETAILED DESCRIPTION OF THE INVENTION

In the plasma display of the invention, electronic elements requiring heat dissipation are disposed in divided areas. The back cover of the plasma display also enhances heat dissipation in the invention. A detailed description is given in the following embodiments

First Embodiment

As shown in FIG. **3**, a first circuit board **350** and a second circuit board **300** are accommodated in a space formed by a metal back cover **40** and a base plate **30** of the plasma display. The second circuit board **300** is secured to the base plate **30** via a plurality of supporters **361** and the first circuit board **350** is secured to the second circuit board **300** via a plurality of supporters **362**, such that the second circuit board **300** is separated from the first circuit board **350** by an appropriate distance for bearing an electronic element (the third electronic element) **340** thereon. The first circuit board **350** is separated from the back cover **40** by supporter **363** to maintain an appropriate distance therebetween for bearing a driver module (the first electronic element) **320** thereon. As the driver module **320** gives out more heat than the electronic element **340**, the driver module **320** makes thermal contact with the back cover **40** via a thermal pad **370** (no adhesive) for heat dissipation by means of the large area of the back cover **40**. As the back cover **40** is fixed to the first circuit board **350** by a structure including bolts **90** and supporters **363**, the thermal pad **370** is pressed tightly between the driver module **320** and the back cover **40** when bolt **90** is mounted to reduce thermal resistance therebetween.

In addition, a plurality of vents **80**, **81** is defined on the back cover **40** for outlet of airflow therethrough by natural convection. A vent **82** can be also defined on the back cover **40** near the location of the driver module **320** to improve the dissipation efficiency.

Thus, airflow A enters the plasma display via the vent **81** on the bottom of the back cover **40** and is divided into A**1** and A**2**. Airflow A**2** passes through the space in which the driver module **320** is positioned to absorb the heat therefrom and dispel outward. Airflow A**1** passes the electronic element **340** and discharges outward via the vent **80** on the top of the back cover **40**.

Thereby, driver module **320** producing more heat is disposed on the first circuit board **350** and near the vents **80**, **81** to provide more airflow and make thermal contact with the back cover **30** to improve heat dissipation. The electronic element **340** producing less heat, receives less airflow. In this condition, driver module **320** and electronic element **340** are disposed in separated areas to improve heat dissipation efficiency.

Second Embodiment

As shown in FIG. **4**, according to the structure in the first embodiment, the distance between the first circuit board **350** and the second circuit board **300** is large enough to accommodate electronic element (the fifth electronic element) **380** on the rear of the first circuit board. Other structures are the same as the first embodiment. Thus, space for electronic elements on the circuit board is increased.

Third Embodiment

As shown in FIG. **5**, a circuit board **500** is secured on the base plate **300** via a supporter **560** and bears a driver module **520** and an electronic element **540**, wherein the driver module **520** makes thermal contact with the back cover **40** by a thermal conductive spring element **570** of copper. The heat from the driver module **520** is conducted to the back cover **40** via the thermal conductive spring element **570** to improve dissipation efficiency. The thermal conductive spring element **570** includes a spring portion **571** and a contact portion **572**. The spring portion **571** and the contact portion **572** can be integrally formed. The spring portion **571** is configured in a U shape, the legs of which can be elastically deformed. The contact portion **572** is a plate abutting the back cover **40** by the resilient force of spring portion **571**. The spring portion **571** provides various options in designing the distance from the driver module **520** to the back cover **40**.

In this embodiment, although the driver module **520** and the electronic element **540** are not disposed in divided areas, the design of the thermal conductive spring element **570** provides another aspect for improving heat dissipation efficiency.

Fourth Embodiment

As shown in FIG. **6**, according to the third embodiment, electronic elements **541** are disposed on the back of the circuit board **500** with other elements are the same as in the third embodiment. In this embodiment, the circuit board **500** divides the space formed by the base plate **30** and the back cover **40** into two subspaces. The driver module **520** and the electronic element **540**, both requiring more heat dissipation are disposed in the subspace near the vents **80**, **81**, and the electronic element **541** (the second electronic element) requiring less heat dissipation is disposed in another subspace.

Fifth Embodiment

This embodiment combines the first and the third embodiments. As shown in FIG. **7**, the first circuit board **350** bears a driver module **721** and a driver module (the fourth electronic element) **722** different from the driver module **721** in height. The driver module **721** makes thermal contact with the back cover **40** via a thermal pad **771**, and the driver module **722** makes thermal contact with the back cover **40** via a thermal conductive spring element **772**. Other elements are the same as the first embodiment.

The invention provides divided areas for electronic elements requiring different heat dissipation and provides dedicated heat sink mechanism for the electronic elements requiring more heat dissipation to enhance the individual heat dissipation of electronic elements as well as improve the overall heat dissipation efficiency of the plasma display.

While the invention has been described by way of example and in terms of the preferred embodiments, it is to be understood that the invention is not limited to the disclosed embodiments. To the contrary, it is intended to cover various modifications and similar arrangements (as would be apparent to those skilled in the art). Therefore, the scope of the appended claims should be accorded the broadest interpretation so as to encompass all such modifications and similar arrangements.

What is claimed is:

1. A plasma display, comprising:

a base plate;

a back cover engaged with the base plate to form a space;

a first circuit board disposed in the space and mounted on the base plate;

a first electronic element disposed on the first circuit board;

a first thermal conductive device disposed between the first electronic element and the back cover and mounted on the first electronic element, wherein the first thermal conductive device comprises a thermal conductive spring element, being substantially U-shaped, having at least one spring leg being substantially linear and extending toward the back cover and at least one contact plate connected to the spring leg and abutting the back cover.

2. The plasma display as claimed in claim **1**, wherein the spring leg is integrally formed with the contact plate.

3. The plasma display as claimed in claim **1**, wherein the thermal conductive spring element comprises copper.

4. The plasma display as claimed in **1**, wherein the base plate is a metal plate.

5. The plasma display as claimed in claim **4**, wherein the metal plate is made of at least one of aluminum, copper or other compound metal.

6. The plasma display as claimed in claim **5** farther comprising a plurality of first supporters disposed between and separating the first circuit board and the base plate by an appropriate distance.

7. The plasma display as claimed in claim **6** farther comprising a second electronic element disposed on the first circuit board opposite to the first electronic element.

8. The plasma display as claimed in claim **5** farther comprising:

a second circuit board mounted between the first circuit board and the base plate;

a third electronic element disposed on the second circuit board and positioned between the first circuit board and the second circuit board.

9. The plasma display as claimed in claim **8** further comprising a fourth electronic element disposed on the first circuit board; and a second thermal conductive device disposed between the fourth electronic element and the back cover and mounted on the fourth electronic element.

10. The plasma display as claimed in claim **9**, wherein the second thermal device comprises a thermal conductive spring element.

11. The plasma display as claimed in claim **10**, wherein the thermal conductive spring element has a spring leg secured on the first electronic element and a contact portion abutting the back cover.

12. The plasma display as claimed in claim **11**, wherein the spring leg is integrally formed with the contact portion.

13. The plasma display as claimed in claim **10**, wherein the thermal conductive spring element comprises copper.

14. The plasma display as claimed in claim **8**, wherein the second circuit board is mounted on the base plate.

15. The plasma display as claimed in claim **14** further comprising a fifth electronic element disposed on the first circuit board opposite to the first electronic element.

* * * * *